CITY OF HOUSTON

HOUSTON PUBLIC WORKS

CAPITAL PROJECTS

LIFT STATION REHABILITATION AND RECONSTRUCTION FY 2023 - LOCKWOOD, SOUTH POINT, SCOTT #3, MARKET ST. #2, MUD #67, & WOODFOREST

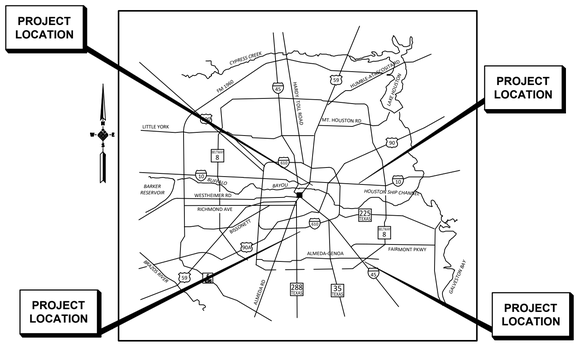

VICINITY MAP
N.T.S.

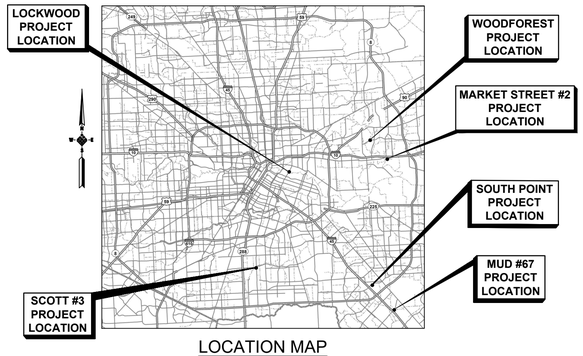

LOCATION MAP
N.T.S.

LIFT STATION	ADDRESS	KEY MAP NO.	DISTRICT
LOCKWOOD	5400 ARMOUR DRIVE	494Q	H
SOUTH POINT	10385 GULF PALMS STREET	576Q	E
SCOTT #3	10718 1/2 SCOTT STREET	573G	D
MARKET STREET #2	13400 MARKET STREET	497K	E
MUD #67	15503 GULF FREEWAY	617B	E
WOODFOREST	12507 WOODFOREST BOULEVARD	496D	I

WBS NO. R-000267-0179-4

MAYOR
JOHN WHITMIRE

CONTROLLER
CHRIS HOLLINS

DISTRICT
COUNCIL MEMBERS

AMY PECK, DISTRICT A
TARSHA JACKSON, DISTRICT B
ABBIE KAMIN, DISTRICT C
CAROLYN EVANS–SHABAZZ, DISTRICT D
FRED FLICKINGER, DISTRICT E
TIFFANY D. THOMAS, DISTRICT F
MARY NAN HUFFMAN, DISTRICT G
MARIO CASTILLO, DISTRICT H
JOAQUIN MARTINEZ, DISTRICT I
EDWARD POLLARD, DISTRICT J
MARTHA CASTEX–TATUM, DISTRICT K

COUNCIL MEMBERS
AT–LARGE

JULIAN RAMIREZ, POSITION 1
WILLIE DAVIS, POSITION 2
TWILA CARTER, POSITION 3
LETITIA PLUMMER, POSITION 4
SALLIE ALCORN, POSITION 5

TDLR EABPR _____

MAY 2026

NO.	DATE	REVISION	APP.

IDS Engineering Group
13430 NW. Freeway
Suite 700
Houston, Tx. 77040
713.462.3178
TxEng Firm 2726
TxSurv Firm 10110700

THIS DOCUMENT IS RELEASED FOR THE PURPOSE OF REVIEW UNDER THE AUTHORITY OF MARCEL KHOUW. P.E. 101807 ON 05/27/2026. IT IS NOT TO BE USED FOR CONSTRUCTION PURPOSES.

SURVEYED BY: KUO & ASSOCIATES, INC.
TBPE FIRM #F–4578; TBPLS FIRM #1007560

PARKS–FORESTRY DEPT.

METRO

HOUSTON WATER

TRANSPORTATION & DRAINAGE OPERATIONS

CAPITAL PROJECTS

SURVEY

CITY ENGINEER DATE

DIRECTOR OF HOUSTON PUBLIC WORKS DATE

FOR CITY OF HOUSTON USE ONLY

DWG. NO. G–01

SHEET NO 01 OF 361 SHEETS

IDS JOB No. 0057-085-00

PLOTTED: 5/13/2026 6:20 PM
PLOT STYLE: COH.ctb
FILE PATH: \\dseg.com\FS\Projects\0000\005708500 CoH Lift Stations – FY 2023\CAD\DWG\PRODUCTION\01–COVER.dwg

PLOTTED: 5/13/2026 6:20 PM

SHEET INDEX

SHEET NUMBER	DRAWING NUMBER	SHEET TITLE
GENERAL		
01	G-01	COVER SHEET
02	G-02	SHEET INDEX
03	G-03	GENERAL CONSTRUCTION NOTES
04	G-04	ABBREVIATIONS
05	G-05	SYMBOLS LEGEND
06	G-06	LOCKWOOD DRIVE LIFT STATION SURVEY CONTROL MAP
07	G-07	SOUTH POINT LIFT STATION SURVEY CONTROL MAP
08	G-08	SCOTT NO. 3 LIFT STATION SURVEY CONTROL MAP
09	G-09	MARKET STREET NO. 2 LIFT STATION SURVEY CONTROL MAP
10	G-10	MUD NO. 067 LIFT STATION SURVEY CONTROL MAP
11	G-11	WOODFOREST LIFT STATION SURVEY CONTROL MAP
12	G-12	VICINITY MAPS (SHEET 1 OF 2)
13	G-13	VICINITY MAPS (SHEET 2 OF 2)
LOCKWOOD LIFT STATION		
14	LCK-C-01	EXISTING SITE ACCESS AND CLEARING PLAN
15	LCK-C-02	LOCKWOOD LIFT STATION EXISTING SITE PLAN
16	LCK-C-03	LOCKWOOD LIFT STATION SITE DEMOLITION PLAN AND SWPPP
17	LCK-C-04	LOCKWOOD LIFT STATION SECTION DEMOLITION
18	LCK-C-05	LOCKWOOD LIFT STATION PROPOSED SITE PLAN
19	LCK-C-06	LOCKWOOD LIFT STATION GRADING PLAN AND DRAINAGE PLAN
20	LCK-C-07	LOCKWOOD LIFT STATION PLAN AND PROFILE (SHEET 1 OF 2)
21	LCK-C-07	LOCKWOOD LIFT STATION PLAN AND PROFILE (SHEET 2 OF 2)
22	LCK-C-08	LOCKWOOD LIFT STATION DRAINAGE CALCULATIONS
23	LCK-C-09	LOCKWOOD LIFT STATION PLAN AT GRADE AND BASE
24	LCK-C-10	LOCKWOOD LIFT STATION ELEVATION SECTION
25	LCK-C-11	MECHANICAL LS PUMP CURVE DATA TABLES
26	LCK-C-12	LOCKWOOD LIFT STATION TOP SLAB DETAIL
27	LCK-A-01	ARCHITECTURAL PRECAST CONCRETE CONTROL BUILDING 4
28	LCK-A-02	LOCKWOOD LIFT STATION WALKING PLATFORM LAYOUT
29	LCK-A-03	LOCKWOOD LIFT STATION ELEVATED GENERATOR PLATFORM
30	LCK-C-13	EXISTING LIFT STATION RECORD DRAWING (SHEET 1 OF 2)
31	LCK-C-14	EXISTING LIFT STATION RECORD DRAWING (SHEET 2 OF 2)
32	LCK-S-01	COVER SHEET – 3D MODEL
33	LCK-S-02	GENERAL NOTES (SHEET 1 OF 3)
34	LCK-S-03	GENERAL NOTES (SHEET 2 OF 3)
35	LCK-S-04	GENERAL NOTES (SHEET 3 OF 3)
36	LCK-S-05	SITE PLAN
37	LCK-S-06	RETAINING WALL
38	LCK-S-07	NATURAL GAS GENERATOR FOUNDATION
39	LCK-S-08	NATURAL GAS GENERATOR FRAMING
40	LCK-S-09	NATURAL GAS GENERATOR SECTIONS
41	LCK-S-10	ELECTRICAL CONTROL BUILDING FOUNDATION
42	LCK-S-11	ELECTRICAL CONTROL BUILDING FRAMING
43	LCK-S-12	ELECTRICAL CONTROL BUILDING SECTIONS
44	LCK-S-13	LOCKWOOD LIFT STATION TYPICAL FOUNDATION DETAILS
45	LCK-S-14	FOUNDATION DETAILS & SCHEDULES
46	LCK-S-15	TYPICAL STEEL DETAILS
47	LCK-S-16	STAIR DETAILS
48	LCK-E-01	LOCKWOOD LIFT STATION ELECTRICAL DEMOLITION SITE PLAN
49	LCK-E-02	LOCKWOOD LIFT STATION PROPOSED ELECTRICAL SITE PLAN
50	LCK-E-03	LOCKWOOD LIFT STATION SINGLE LINE DIAGRAM
51	LCK-E-04	LOCKWOOD LIFT STATION THREE-LINE DIAGRAM
52	LCK-E-05	LOCKWOOD LIFT STATION MCC SCHEMATIC & WIRING DIAGRAM
53	LCK-E-06	LOCKWOOD LIFT STATION MCC ELEVATION
54	LCK-E-07	LOCKWOOD LIFT STATION CONTROL BUILDING PLAN
55	LCK-E-08	LOCKWOOD LIFT STATION ELECTRICAL ENLARGED PLAN
56	LCK-E-09	LOCKWOOD LIFT STATION ELECTRICAL PROPOSED PLATFORM LAYOUT
57	LCK-E-10	LOCKWOOD LIFT STATION JUNCTION BOX DETAILS
58	LCK-E-11	LOCKWOOD LIFT STATION SERVICE POLE & RACK DETAIL
59	LCK-E-12	LOCKWOOD LIFT STATION CONDUIT SCHEDULE-I
60	LCK-E-13	LOCKWOOD LIFT STATION CONDUIT SCHEDULE-II
61	LCK-I-01	LOCKWOOD LIFT STATION P&ID DIAGRAM-I
62	LCK-I-02	LOCKWOOD LIFT STATION P&ID DIAGRAM-II
63	LCK-I-03	LOCKWOOD LIFT STATION P&ID DIAGRAM-III
64	LCK-I-04	LOCKWOOD LIFT STATION COMMUNICATION DIAGRAM
65	LCK-I-05	LOCKWOOD LIFT STATION CONTROL PANEL EQUIP. LAYOUT & SCHEDULE
66	LCK-I-06	LOCKWOOD LIFT STATION CONTROL PANEL BACK PANEL ELEVATION
67	LCK-I-07	LOCKWOOD LIFT STATION CONTROL PANEL EQUIPMENT LAYOUT
68	LCK-I-08	LOCKWOOD LIFT STATION CONTROL PANEL CONTROL WIRING DIAGRAM-I
69	LCK-I-09	LOCKWOOD LIFT STATION CONTROL PANEL CONTROL WIRING DIAGRAM-II
70	LCK-I-10	LOCKWOOD LIFT STATION CONTROL PANEL CONTROL WIRING DIAGRAM-III
71	LCK-I-11	LOCKWOOD LIFT STATION CONTROL PUMP NO. 1 CONTROL WIRING DIAGRAM
72	LCK-I-12	LOCKWOOD LIFT STATION CONTROL PUMP NO. 2 CONTROL WIRING DIAGRAM
73	LCK-I-13	LOCKWOOD LIFT STATION CONTROL PUMP NO. 3 CONTROL WIRING DIAGRAM
74	LCK-I-14	LOCKWOOD LIFT STATION CONTROL PUMP NO. 4 CONTROL WIRING DIAGRAM
75	LCK-I-15	LOCKWOOD LIFT STATION CONTROL PUMP NO. 5 CONTROL WIRING DIAGRAM
76	LCK-I-16	LOCKWOOD LIFT STATION CONTROL PUMP NO. 6 CONTROL WIRING DIAGRAM

SHEET INDEX

SHEET NUMBER	DRAWING NUMBER	SHEET TITLE
SOUTH POINT LIFT STATION		
77	SPT-C-01	SOUTH POINT LIFT STATION EXISTING SITE PLAN
78	SPT-C-02	SOUTH POINT LIFT STATION SITE DEMOLITION PLAN AND SWPPP
79	SPT-C-03	SOUTH POINT LIFT STATION SECTION DEMOLITION
80	SPT-C-04	SOUTH POINT LIFT STATION PROPOSED SITE PLAN
81	SPT-C-05	SOUTH POINT LIFT STATION GRADING PLAN AND DRAINAGE PLAN
82	SPT-C-06	SOUTH POINT LIFT STATION PLAN AND PROFILE
83	SPT-C-07	SOUTH POINT LIFT STATION DRAINAGE CALCULATIONS
84	SPT-C-08	SOUTH POINT LIFT STATION PLAN AT GRADE AND BASE
85	SPT-C-09	SOUTH POINT LIFT STATION ELEVATION SECTION
86	SPT-C-10	SOUTH POINT LIFT STATION TOP SLAB DETAIL
87	SPT-C-11	EXISTING LIFT STATION RECORD DRAWING (SHEET 1 OF 3)
88	SPT-C-12	EXISTING LIFT STATION RECORD DRAWING (SHEET 2 OF 3)
89	SPT-C-13	EXISTING LIFT STATION RECORD DRAWING (SHEET 3 OF 3)
90	SPT-E-01	SOUTH POINT LIFT STATION ELECTRICAL DEMOLITION SITE PLAN
91	SPT-E-02	SOUTH POINT LIFT STATION PROPOSED SITE PLAN
92	SPT-E-03	SOUTH POINT LIFT STATION SINGLE LINE DIAGRAM
93	SPT-E-04	SOUTH POINT LIFT STATION THREE-LINE DIAGRAM
94	SPT-E-05	SOUTH POINT LIFT STATION CONTROL CABINET DETAIL
95	SPT-E-06	SOUTH POINT LIST STATION ENLARGED ELECTRICAL PLAN
96	SPT-E-07	SOUTH POINT LIFT STATION JUNCTION BOX DETAILS
97	SPT-E-08	SOUTH POINT LIFT STATION SERVICE RACK DETAIL
98	SPT-E-09	SOUTH POINT LIFT STATION SERVICE POLE DETAIL
99	SPT-E-10	SOUTH POINT LIFT STATION CONDUIT SCHEDULE
100	SPT-I-01	SOUTH POINT LIFT STATION P&ID DIAGRAM-I
101	SPT-I-02	SOUTH POINT LIFT STATION P&ID DIAGRAM-II
102	SPT-I-03	SOUTH POINT LIFT STATION COMMUNICATIONS DIAGRAM
103	SPT-I-04	SOUTH POINT LIFT STATION CTRL. CABINET EQUIP. LAYOUT & SCHEDULE
104	SPT-I-05	SOUTH POINT LIFT STATION CONTROL PANEL EQUIPMENT LAYOUT-I
105	SPT-I-06	SOUTH POINT LIFT STATION CONTROL PANEL EQUIPMENT LAYOUT-II
106	SPT-I-07	SOUTH POINT LIFT STATION CONTROL PANEL EQUIPMENT LAYOUT-III
107	SPT-I-08	SOUTH POINT LIFT STATION CONTROL PANEL CONTROL WIRING DIAGRAM-I
108	SPT-I-09	SOUTH POINT LIFT STATION CONTROL PANEL CONTROL WIRING DIAGRAM-II
109	SPT-I-10	SOUTH POINT LIFT STATION CTRL. PANEL CONTROL WIRING DIAGRAM-III
110	SPT-I-11	SOUTH POINT LIFT STATION CONTROL PANEL CONTROL WIRING DIAGRAM-IV
111	SPT-I-12	SOUTH POINT LIFT STATION PUMP NO. 1 CONTROL WIRING DIAGRAM
112	SPT-I-13	SOUTH POINT LIFT STATION PUMP NO. 2 CONTROL WIRING DIAGRAM
113	SPT-I-14	SOUTH POINT LIFT STATION PUMP NO. 3 CONTROL WIRING DIAGRAM
SCOTT NO. 3 LIFT STATION		
114	SCT-C-01	SCOTT NO. 3 LIFT STATION EXISTING SITE PLAN
115	SCT-C-02	SCOTT NO. 3 LIFT STATION SITE DEMOLITION PLAN AND SWPPP
116	SCT-C-03	SCOTT NO. 3 LIFT STATION SECTION DEMOLITION
117	SCT-C-04	SCOTT NO. 3 LIFT STATION PROPOSED SITE PLAN
118	SCT-C-05	SCOTT NO. 3 LIFT STATION GRADING PLAN AND DRAINAGE PLAN
119	SCT-C-06	SCOTT NO. 3 LIFT STATION PLAN AND PROFILE
120	SCT-C-07	SCOTT NO. 3 LIFT STATION DRAINAGE CALCULATIONS
121	SCT-C-08	SCOTT NO. 3 LIFT STATION PLAN AT GRADE AND BASE
122	SCT-C-09	SCOTT NO. 3 LIFT STATION ELEVATION SECTION
123	SCT-C-10	MECHANICAL LS PUMP CURVE DATA TABLES
124	SCT-C-11	SCOTT NO. 3 LIFT STATION TOP SLAB DETAIL
125	SCT-A-01	ARCHITECTURAL PRECAST CONCRETE CONTROL BUILDING 4
126	SCT-A-02	SCOTT NO. 3 LIFT STATION ODOR CONTROL BUILDING DETAIL
127	SCT-C-12	EXISTING LIFT STATION RECORD DRAWING (SHEET 1 OF 3)
128	SCT-C-13	EXISTING LIFT STATION RECORD DRAWING (SHEET 2 OF 3)
129	SCT-C-14	EXISTING LIFT STATION RECORD DRAWING (SHEET 3 OF 3)
130	SCT-S-01	SCOTT ST. NO. 3 LIFT STATION 3D MODEL
131	SCT-S-02	SCOTT ST. NO. 3 LIFT STATION GENERAL NOTES (SHEET 1 OF 3)
132	SCT-S-03	SCOTT ST. NO. 3 LIFT STATION GENERAL NOTES (SHEET 2 OF 3)
133	SCT-S-04	SCOTT ST. NO. 3 LIFT STATION GENERAL NOTES (SHEET 3 OF 3)
134	SCT-S-05	SCOTT ST. NO. 3 LIFT STATION SITE PLAN
135	SCT-S-06	SCOTT ST. NO. 3 LIFT STATION EXISTING LIFT STATION
136	SCT-S-07	SCOTT ST. NO. 3 LIFT STATION ODOR CONTROL BUILDING FOUNDATION
137	SCT-S-08	SCOTT ST. NO. 3 LIFT STATION ELECTRICAL CONTROL BLDG. FOUNDATION
138	SCT-S-09	SCOTT ST. NO. 3 LIFT STATION TYPICAL FOUNDATION DETAILS
139	SCT-S-10	SCOTT ST. NO. 3 LIFT STATION FOUNDATION DETAILS & SCHEDULES
140	SCT-E-01	SCOTT ST. NO. 3 LIFT STATION PROPOSED ELECTRICAL SITE PLAN
141	SCT-E-02	SCOTT ST. NO. 3 LIFT STATION PROPOSED ELECTRICAL SITE PLAN
142	SCT-E-03	SCOTT ST. NO. 3 LIFT STATION MCC-1 SINGLE LINE DIAGRAM
143	SCT-E-04	SCOTT ST. NO. 3 LIFT STATION MCC-2 SINGLE LINE DIAGRAM
144	SCT-E-05	SCOTT ST. NO. 3 LIFT STATION MCC-1 THREE-LINE DIAGRAM
145	SCT-E-06	SCOTT ST. NO. 3 LIFT STATION MCC-2 THREE-LINE DIAGRAM
146	SCT-E-07	SCOTT ST. NO. 3 LIFT STATION MCC SCHEMATIC & WIRING DIAGRAM
147	SCT-E-08	SCOTT ST. NO. 3 LIFT STATION MCC ELEVATION
148	SCT-E-09	SCOTT ST. NO. 3 LIFT STATION CONTROL BUILDING PLAN
149	SCT-E-10	SCOTT ST. NO. 3 LIFT STATION JUNCTION BOX DETAILS
150	SCT-E-11	SCOTT ST. NO. 3 LIFT STATION SERVICE POLE DETAIL
151	SCT-E-12	SCOTT ST. NO. 3 LIFT STATION ENLARGED PLAN VIEW
152	SCT-E-13	SCOTT ST. NO. 3 LIFT STATION CONDUIT SCHEDULE-I

SHEET INDEX

SHEET NUMBER	DRAWING NUMBER	SHEET TITLE
153	SCT-E-14	SCOTT ST. NO. 3 LIFT STATION CONDUIT SCHEDULE-II
154	SCT-E-15	SCOTT ST. NO. 3 LIFT STATION SERVICE RACK DETAIL
155	SCT-E-16	SCOTT ST. NO. 3 LIFT STATION MULTIN 869 MOTOR WIRING DIAGRAM
156	SCT-I-01	SCOTT ST. NO. 3 LIFT STATION P&ID DIAGRAM-I
157	SCT-I-02	SCOTT ST. NO. 3 LIFT STATION P&ID DIAGRAM-II
158	SCT-I-03	SCOTT ST. NO. 3 LIFT STATION COMMUNICATION DIAGRAM
159	SCT-I-04	SCOTT ST. NO. 3 LIFT STA. CNTRL PANEL EQUIP. LAYOUT & SCHEDULE
160	SCT-I-05	SCOTT ST. NO. 3 LIFT STATION CNTRL PANEL BACK DOOR ELEVATION
161	SCT-I-06	SCOTT ST. NO. 3 LIFT STATION CONTROL PANEL EQUIPMENT LAYOUT
162	SCT-I-07	SCOTT ST. NO. 3 LIFT STATION CNTRL PANEL CNTRL. WIRING DIAGRAM-I
163	SCT-I-08	SCOTT ST. NO. 3 LIFT STA. CNTRL PANEL CNTRL. WIRING DIAGRAM-II
164	SCT-I-09	SCOTT ST. NO. 3 LIFT STA. CNTRL PANEL CNTRL. WIRING DIAGRAM-III
165	SCT-I-10	SCOTT ST. NO. 3 LIFT STATION PUMP NO. W1 CONTROL WIRING DIAGRAM
166	SCT-I-11	SCOTT ST. NO. 3 LIFT STATION PUMP NO. W2 CONTROL WIRING DIAGRAM
167	SCT-I-12	SCOTT ST. NO. 3 LIFT STATION PUMP NO. W3 CONTROL WIRING DIAGRAM
168	SCT-I-13	SCOTT ST. NO. 3 LIFT STATION PUMP NO. W4 CONTROL WIRING DIAGRAM
169	SCT-I-14	SCOTT ST. NO. 3 LIFT STATION PUMP NO. D5 CONTROL WIRING DIAGRAM
170	SCT-I-15	SCOTT ST. NO. 3 LIFT STATION PUMP NO. D6 CONTROL WIRING DIAGRAM
171	SCT-I-16	SCOTT ST. NO. 3 LIFT STA. FERROUS SULFATE FEED PUMPS P&ID DIAG.
172	SCT-I-17	SCOTT ST. NO. 3 LIFT STA. SODIUM NITRATE FEED PUMPS WIRING DIAG.
173	SCT-I-18	SCOTT ST. NO. 3 LIFT STA. SODIUM NITRATE FEED PUMPS CNTRL PANEL
MARKET STREET NO. 2 LIFT STATION		
174	MKT-C-01	EXISTING SITE ACCESS PLAN
175	MKT-C-02	MARKET ST. NO. 2 LIFT STATION EXISTING SITE PLAN
176	MKT-C-03	MARKET ST. NO. 2 LIFT STATION SITE DEMOLITION PLAN AND SWPPP
177	MKT-C-04	MARKET ST. NO. 2 LIFT STATION SECTION DEMOLITION
178	MKT-C-05	MARKET ST. NO. 2 LIFT STATION PROPOSED SITE PLAN
179	MKT-C-06	MARKET ST. NO. 2 LIFT STATION GRADING PLAN AND DRAINAGE PLAN
180	MKT-C-07	MARKET ST. NO. 2 LIFT STATION DRAINAGE CALCULATIONS
181	MKT-C-08	MARKET ST. NO. 2 LIFT STATION PLAN AT GRADE AND BASE
182	MKT-C-09	MARKET ST. NO. 2 LIFT STATION ELEVATION SECTION
183	MKT-C-10	MARKET ST. NO. 2 LIFT STATION TOP SLAB DETAIL
184	MKT-A-01	MARKET ST. NO. 2 LIFT STATION ELEVATED ELECTRICAL PLATFORM
185	MKT-C-11	EXISTING LIFT STATION RECORD DRAWING (SHEET 1 OF 2)
186	MKT-C-12	EXISTING LIFT STATION RECORD DRAWING (SHEET 2 OF 2)
187	MKT-S-01	MARKET ST. NO. 2 LIFT STATION 3D MODEL
188	MKT-S-02	MARKET ST. NO. 2 LIFT STATION GENERAL NOTES (SHEET 1 OF 3)
189	MKT-S-03	MARKET ST. NO. 2 LIFT STATION GENERAL NOTES (SHEET 2 OF 3)
190	MKT-S-04	MARKET ST. NO. 2 LIFT STATION GENERAL NOTES (SHEET 3 OF 3)
191	MKT-S-05	MARKET ST. NO. 2 LIFT STATION SITE PLAN
192	MKT-S-06	MARKET ST. NO. 2 LIFT STATION ELECTRICAL CABINET FOUNDATION
193	MKT-S-07	MARKET ST. NO. 2 LIFT STATION ELECTRICAL CABINET FRAMING
194	MKT-S-08	MARKET ST. NO. 2 LIFT STATION ELECTRICAL CABINET SECTIONS
195	MKT-S-09	MARKET ST. NO. 2 LIFT STATION FOUNDATION DETAILS & SCHEDULES
196	MKT-S-10	MARKET ST. NO. 2 LIFT STATION TYPICAL FOUNDATION DETAILS
197	MKT-S-11	MARKET ST. NO. 2 LIFT STATION TYPICAL STEEL DETAILS
198	MKT-S-12	MARKET ST. NO. 2 LIFT STATION STAIR DETAILS
199	MKT-E-01	MARKET ST. NO. 2 LIFT STATION ELECTRICAL DEMOLITION SITE PLAN
200	MKT-E-02	MARKET ST. NO. 2 LIFT STATION PROPOSED ELECTRICAL SITE PLAN
201	MKT-E-03	MARKET ST. NO. 2 LIFT STATION SINGLE-LINE DIAGRAM
202	MKT-E-04	MARKET ST. NO. 2 LIFT STATION THREE-LINE DIAGRAM
203	MKT-E-05	MARKET ST. NO. 2 LIFT STATION ELECTRICAL ENLARGED PLAN
204	MKT-E-06	MARKET ST. NO. 2 LIFT STATION CONTROL CNTRL. CAB. ENCLO. DETL.
205	MKT-E-07	MARKET ST. NO. 2 LIFT STATION JUNCTION BOX DETAIL
206	MKT-E-08	MARKET ST. NO. 2 LIFT STATION SERVICE RACK DETAIL
207	MKT-E-09	MARKET ST. NO. 2 LIFT STATION SERVICE POLE DETAIL
208	MKT-E-10	MARKET ST. NO. 2 LIFT STATION CONDUIT SCHEDULE
209	MKT-I-01	MARKET ST. NO. 2 LIFT STATION P&ID DIAGRAM-I
210	MKT-I-02	MARKET ST. NO. 2 LIFT STATION P&ID DIAGRAM-II
211	MKT-I-03	MARKET ST. NO. 2 LIFT STATION COMMUNICATION DIAGRAM
212	MKT-I-04	MARKET ST. NO. 2 LIFT STATION CNTRL. PANEL EQUIP. LAYT. & SCHED.
213	MKT-I-05	MARKET ST. NO. 2 LIFT STATION CONTROL PANEL EQUIPMENT LAYOUT-I
214	MKT-I-06	MARKET ST. NO. 2 LIFT STATION CONTROL PANEL EQUIPMENT LAYOUT-II
215	MKT-I-07	MARKET ST. NO. 2 LIFT STATION CONTROL PANEL EQUIPMENT LAYOUT-III
216	MKT-I-08	MARKET ST. NO. 2 LIFT STA. CNTRL. PANEL CNTRL WIRING DIAGR.-I
217	MKT-I-09	MARKET ST. NO. 2 LIFT STA. CNTRL. PANEL CNTRL WIRING DIAGR.-II
218	MKT-I-10	MARKET ST. NO. 2 LIFT STA. CNTRL. PANEL CNTRL WIRING DIAGR.-III
219	MKT-I-11	MARKET ST. NO. 2 LIFT STA. CNTRL. PANEL CNTRL WIRING DIAGR.-IV
220	MKT-I-12	MARKET ST. NO. 2 LIFT STA. PUMP NO. 1 CONTROL WIRING DIAGRAM
221	MKT-I-13	MARKET ST. NO. 2 LIFT STA. PUMP NO. 2 CONTROL WIRING DIAGRAM
MUD NO. 67 LIFT STATION		
222	MUD-C-01	MUD NO. 67 LIFT STATION EXISTING SITE PLAN
223	MUD-C-02	MUD NO. 67 LIFT STATION SITE DEMOLITION PLAN AND SWPPP
224	MUD-C-03	MUD No. 67 LIFT STATION SECTION DEMOLITION
225	MUD-C-04	MUD No. 67 LIFT STATION PROPOSED SITE PLAN
226	MUD-C-05	MUD NO. 67 LIFT STATION GRADING PLAN AND DRAINAGE PLAN
227	MUD-C-06	MUD NO. 67 LIFT STATION PLAN AND PROFILE (SHEET 1 OF 2)
228	MUD-C-07	MUD NO. 67 LIFT STATION PLAN AND PROFILE (SHEET 2 OF 2)

SHEET INDEX

SHEET NUMBER	DRAWING NUMBER	SHEET TITLE
229	MUD-C-08	MUD NO. 67 LIFT STATION DRAINAGE CALCULATIONS
230	MUD-C-09	MUD NO. 67 LIFT STATION PLAN AT GRADE AND BASE
231	MUD-C-10	MUD NO. 67 LIFT STATION ELEVATION SECTION
232	MUD-C-11	MUD NO. 67 LIFT STATION TOP SLAB DETAIL
233	MUD-C-12	EXISTING LIFT STATION RECORD DRAWING
234	MUD-E-01	MUD NO. 67 LIFT STATION ELECTRICAL DEMOLITION SITE PLAN
235	MUD-E-02	MUD NO. 67 LIFT STATION PROPOSED ELECTRICAL SITE PLAN
236	MUD-E-03	MUD NO. 67 LIFT STATION SINGLE-LINE DIAGRAM
237	MUD-E-04	MUD NO. 67 LIFT STATION THREE-LINE DIAGRAM
238	MUD-E-05	MUD NO. 67 LIFT STATION ENLARGED PLAN VIEW
239	MUD-E-06	MUD NO. 67 LIFT STATION CONTROL CABINET ENCLOSURE DETAIL
240	MUD-E-07	MUD NO. 67 LIFT STATION JUNCTION BOX DETAILS
241	MUD-E-08	MUD NO. 67 LIFT STATION SERVICE RACK DETAIL
242	MUD-E-09	MUD NO. 67 LIFT STATION SERVICE POLE DETAIL
243	MUD-E-10	MUD NO. 67 LIFT STATION CONDUIT SCHEDULE
244	MUD-I-01	MUD NO. 67 LIFT STATION P&ID DIAGRAM-I
245	MUD-I-02	MUD NO. 67 LIFT STATION P&ID DIAGRAM-II
246	MUD-I-03	MUD NO. 67 LIFT STATION COMMUNICATION DIAGRAM
247	MUD-I-04	MUD NO. 67 LIFT STATION CONTROL PANEL EQUIP. LAYOUT & SCHEDULE
248	MUD-I-05	MUD NO. 67 LIFT STATION CONTROL PANEL EQUIPMENT LAYOUT-I
249	MUD-I-06	MUD NO. 67 LIFT STATION CONTROL PANEL EQUIPMENT LAYOUT-II
250	MUD-I-07	MUD NO. 67 LIFT STATION CONTROL PANEL EQUIPMENT LAYOUT-III
251	MUD-I-08	MUD NO. 67 LIFT STATION CONTROL PANEL CONTROL WIRING DIAGRAM-I
252	MUD-I-09	MUD NO. 67 LIFT STATION CONTROL PANEL CONTROL WIRING DIAGRAM-II
253	MUD-I-10	MUD NO. 67 LIFT STATION CONTROL PANEL CONTROL WIRING DIAGRAM-III
254	MUD-I-11	MUD NO. 67 LIFT STATION CONTROL PANEL CONTROL WIRING DIAGRAM-IV
255	MUD-I-12	MUD NO. 67 LIFT STATION PUMP NO. 1 CONTROL WIRING DIAGRAM
256	MUD-I-13	MUD NO. 67 LIFT STATION PUMP NO. 2 CONTROL WIRING DIAGRAM
WOODFOREST LIFT STATION		
257	WDF-C-01	WOODFOREST LIFT STATION EXISTING SITE PLAN
258	WDF-C-02	WOODFOREST LIFT STATION SITE DEMOLITION PLAN AND SWPPP
259	WDF-C-03	WOODFOREST LIFT STATION SECTION DEMOLITION
260	WDF-C-04	WOODFOREST LIFT STATION PROPOSED SITE PLAN
261	WDF-C-05	WOODFOREST LIFT STATION GRADING PLAN AND DRAINAGE PLAN
262	WDF-C-06	WOODFOREST LIFT STATION PLAN AND PROFILE (SHEET 1 OF 2)
263	WFD-C-07	WOODFOREST LIFT STATION PLAN AND PROFILE (SHEET 2 OF 2)
264	WDF-C-08	WOODFOREST LIFT STATION DRAINAGE CALCULATIONS
265	WDF-C-09	WOODFOREST LIFT STATION PLAN AT GRADE AND BASE
266	WDF-C-10	WOODFOREST LIFT STATION ELEVATION SECTION
267	WDF-C-11	MECHANICAL LIFT STATION PUMP DATA TABLES
268	WDF-C-12	WOODFOREST LIFT STATION TOP SLAB DETAIL
269	WDF-A-01	ARCHITECTURAL PRECAST CONCRRETE CONTROL BUILDING 4
270	WDF-A-02	WOODFOREST LIFT STATION FRP BUILDING DETAIL
271	WDF-C-13	EXISTING LIFT STATION RECORD DRAWING (SHEET 1 OF 3)
272	WDF-C-14	EXISTING LIFT STATION RECORD DRAWING (SHEET 2 OF 3)
273	WDF-C-15	EXISTING LIFT STATION RECORD DRAWING (SHEET 3 OF 3)
274	WDF-S-01	WOODFOREST LIFT STATION 3D MODEL
275	WDF-S-02	WOODFOREST LIFT STATION GENERAL NOTES (SHEET 1 OF 3)
276	WDF-S-03	WOODFOREST LIFT STATION GENERAL NOTES (SHEET 2 OF 3)
277	WDF-S-04	WOODFOREST LIFT STATION GENERAL NOTES (SHEET 3 OF 3)
278	WDF-S-05	WOODFOREST LIFT STATION SITE PLAN
279	WDF-S-06	WOODFOREST LIFT STATION ODOR CONTROL BUILDING FOUNDATION
280	WDF-S-07	WOODFOREST LIFT STATION ELECTRICAL CONTROL BUILDING FOUNDATION
281	WDF-S-08	WOODFOREST LIFT STATION TYPICAL FOUNDATION DETAILS
282	WDF-S-09	WOODFOREST LIFT STATION FOUNDATION DETAILS & SCHEDULES
283	WDF-E-01	WOODFOREST LIFT STATION ELECTRICAL DEMOLITION SITE PLAN
284	WDF-E-02	WOODFOREST LIFT STATION PROPOSED ELECTRICAL SITE PLAN
285	WDF-E-03	WOODFOREST LIFT STATION SINGLE LINE DIAGRAM
286	WDF-E-04	WOODFOREST LIFT STATION THREE-LINE DIAGRAM
287	WDF-E-05	WOODFOREST LIFT STATION MCC SCHEMATIC & WIRING DIAGRAM
288	WDF-E-06	WOODFOREST LIFT STATION MCC ELEVATION
289	WDF-E-07	WOODFOREST LIFT STATION ENLARGED ELECTRICAL PLAN
290	WDF-E-08	WOODFOREST LIFT STATION CONTROL BUILDING PLAN
291	WDF-E-09	WOODFOREST LIFT STATION JUNCTION BOX DETAILS
292	WDF-E-10	WOODFOREST LIFT STATION SERVICE POLE DETAIL
293	WDF-E-11	WOODFOREST LIFT SERVICE RACK DETAIL
294	WDF-E-12	WOODFOREST LIFT STATION CONDUIT SCHEDULE
295	WDF-I-01	WOODFOREST LIFT STATION P&ID DIAGRAM-I
296	WDF-I-02	WOODFOREST LIFT STATION P&ID DIAGRAM-II
297	WDF-I-03	WOODFOREST LIFT STATION COMMUNICATION DIAGRAM
298	WDF-I-04	WOODFOREST LIFT STATION CONTROL CABINET EQUIP. LAYOUT & SCHEDULE
299	WDF-I-05	WOODFOREST LIFT STATION CONTROL CABINET BACK DOOR ELEVATION
300	WDF-I-06	WOODFOREST LIFT STATION CONTROL CABINET EQUIPMENT LAYOUT
301	WDF-I-07	WOODFOREST LIFT STATION CONTROL PANEL CONTROL WIRING DIAGRAM-I
302	WDF-I-08	WOODFOREST LIFT STATION CONTROL PANEL CONTROL WIRING DIAGRAM-II
303	WDF-I-09	WOODFOREST LIFT STATION CONTROL PANEL CONTROL WIRING DIAGRAM-III
304	WDF-I-10	WOODFOREST LIFT STATION PUMP NO. 1 CONTROL WIRING DIAGRAM
305	WDF-I-11	WOODFOREST LIFT STATION PUMP NO. 2 CONTROL WIRING DIAGRAM

SHEET INDEX

SHEET NUMBER	DRAWING NUMBER	SHEET TITLE
306	WDF-I-12	WOODFOREST LIFT STATION PUMP NO. 3 CONTROL WIRING DIAGRAM
307	WDF-I-13	WOODFOREST LIFT STATION SODIUM NITRATE FEED PUMPS P&ID DIAGRAM
308	WDF-I-14	WOODFOREST LIFT STATION SODIUM NITRATE FEED PUMPS WIRING DIAGRAM
309	WDF-I-15	WOODFOREST LIFT STATION SODIUM NITRATE FEED PUMPS CONTROL PANEL
LIFT STATION DETAILS		
310	C-01	MISCELLANEOUS DETAILS (SHEET 1 OF 2)
311	C-02	MISCELLANEOUS DETAILS (SHEET 2 OF 2)
312	C-03	TYPICAL SANITARY SEWER DETAILS (SHEET 1 OF 2)
313	C-04	TYPICAL SANITARY SEW

PLOTTED: 5/13/2026 6:20 PM

GENERAL CONSTRUCTION NOTES:

1. THE CONTRACTOR SHALL BE FULLY RESPONSIBLE FOR ANY AND ALL DAMAGE TO THE EXISTING PUBLIC OR PRIVATE UTILITY LINES, INCLUDING BUT NOT LIMITED TO WATER LINES, WASTEWATER COLLECTION SYSTEMS AND STORM SEWERS, DURING CONSTRUCTION. ALL DAMAGES SHALL BE REPAIRED IN ACCORDANCE WITH CITY OF HOUSTON, DEPARTMENT OF PUBLIC WORKS AND ENGINEERING "STANDARD CONSTRUCTION SPECIFICATIONS" WITH LATEST ADDENDA AND AMENDMENTS THERETO, WITH NO COST TO THE CITY.
2. BACKFILLING AND CLEAN-UP SHALL IMMEDIATELY FOLLOW PIPE LAYING OPERATION. PIPE LAYING SHALL BE SUSPENDED IF CLEAN-UP IS NOT SATISFACTORY.
3. CONSTRUCTION STAKING (ALIGNMENT AND GRADE) TO BE PROVIDED BY THE CONTRACTOR. NO SEPARATE PAY.
4. CONTRACTOR TO USE CAUTION WHEN CROSSING ALL EXISTING FACILITIES. ANY DAMAGE TO BE REPAIRED TO ORIGINAL OR BETTER CONDITION AT THE CONTRACTORS EXPENSE. NO SEPARATE PAY.
5. SURPLUS EXCAVATED MATERIAL SHALL BE PLACED AS DIRECTED BY THE ENGINEER. IF THE ENGINEER NOTIFIES THE CONTRACTOR THAT THE OWNER DOES NOT HAVE USE FOR THIS MATERIAL, THE SURPLUS MATERIAL BECOMES THE PROPERTY OF THE CONTRACTOR AND HIS RESPONSIBILITY TO DISPOSE OF THE MATERIAL.
6. NO STREETS SHALL BE BLOCKED WITHOUT SPECIFIC WRITTEN APPROVAL OF THE APPROPRIATE GOVERNMENTAL ENTITY.
7. CONTRACTOR SHALL MAINTAIN DRAINAGE TO ORIGINAL OR BETTER CONDITION THROUGHOUT THE CONSTRUCTION OF THE PROJECT. NO SEPARATE PAY.
8. PAVED SURFACES SHALL BE PROTECTED FROM DAMAGE FROM TRACKED EQUIPMENT.
9. WHERE NONMETALLIC PIPE IS INSTALLED, A DURABLE METAL TAPE SHALL BE INSTALLED CONCURRENTLY (APPROXIMATELY ONE FOOT ABOVE PIPE) FOR DETECTION PURPOSES.
10. ANY DEVIATION FROM DESIGN OR DETAILS SHALL BE APPROVED IN WRITING BY THE ENGINEER.
11. ALL EXISTING UNDERGROUND UTILITIES ARE SHOWN IN APPROXIMATE WAY ONLY. THE CONTRACTOR SHALL REQUEST THE EXACT LOCATION OF THESE FACILITIES BY CALLING THE ONE-CALL NOTIFICATION SYSTEM. CONTRACTOR SHALL GIVE NOTICE TO TEXAS811 (TELEPHONE NUMBER 811) REQUESTING THE LOCATION OF UNDERGROUND FACILITIES AND UTILITY LINES AT EACH EXCAVATION SITE AS REQUIRED BY TEXAS UTILITIES CODE, CHAPTER 251, NOT EARLIER THAN THE 14TH DAY BEFORE THE DATE THE EXCAVATION IS TO BEGIN OR LATER THAN THE 48TH HOUR BEFORE THE TIME THE EXCAVATION IS TO BEGIN, EXCLUDING SATURDAYS, SUNDAYS, AND LEGAL HOLIDAYS. THE CONTRACTOR IS FULLY RESPONSIBLE FOR ANY AND ALL DAMAGES WHICH OCCUR DUE TO HIS FAILURE TO REQUEST THE LOCATION AND PRESERVATION OF THESE UNDERGROUND FACILITIES. CONTRACTOR SHALL COORDINATE ALL CONFLICTS WITH THE APPROPRIATE GOVERNING AGENCY. NO SEPARATE PAY.
12. CONTRACTOR SHALL COMPLY WITH ALL FEDERAL, STATE, AND LOCAL LAWS. THIS INCLUDES BUT IS NOT LIMITED TO COMPLIANCE WITH THE LATEST EDITION OF OSHA REGULATIONS AND THE STATE OF TEXAS LAWS CONCERNING EXCAVATION AND CLEARANCES FROM OVERHEAD POWER LINES.
13. CONTRACTOR SHALL PROVIDE A TRENCH SAFETY SYSTEM TO MEET, AS A MINIMUM, THE REQUIREMENTS OF OSHA SAFETY AND HEALTH REGULATION, PART 1926, SUBPART P AS PUBLISHED IN THE FEDERAL REGISTER, VOLUME 54, NO. 209, DATED OCTOBER 31, 1989.
14. CONTRACTOR SHALL MAINTAIN AT LEAST ONE LANE OF TRAFFIC IN EACH DIRECTION DURING WORKING HOURS OR PROVIDE DETOURS AROUND CONSTRUCTION SITE, AND USE UNIFORMED POLICE TO CONTROL TRAFFIC WHEN REQUIRED BY OWNER.
15. CONTRACTOR SHALL GIVE NOTICE TO ALL AUTHORIZED INSPECTORS, SUPERINTENDENTS, OR PERSONS IN CHARGE OF PRIVATE AND PUBLIC UTILITIES OR RAILROADS AFFECTED BY HIS OPERATIONS PRIOR TO COMMENCEMENT OF WORK.
16. CONTRACTOR SHALL ASSURE HIMSELF THAT ALL CONSTRUCTION PERMITS HAVE BEEN OBTAINED PRIOR TO COMMENCEMENT OF WORK. REQUIRED PERMITS THAT CAN BE ISSUED TO CONTRACTOR WILL BE OBTAINED AT HIS EXPENSE.
17. ALL UTILITY TRENCHES TO BE BACKFILLED TO 95 PERCENT STANDARD PROCTOR DENSITY UNLESS OTHERWISE NOTED.
18. ALL DEBRIS GENERATED FROM WORK ON THIS PROJECT SHALL BE DISPOSED OF BY THE CONTRACTOR AT AN APPROVED LANDFILL.
19. ANY REFERENCE TO CODES OR SPECIFICATIONS SHALL BE WITH RESPECT TO CURRENT EDITIONS OF THE SAME.
20. INTERRUPTION OF FLOWS THROUGH EXISTING PUMPING FACILITIES IS NOT PERMITTED WITHOUT PRIOR WRITTEN APPROVAL OF OWNER. SUBMIT FOR APPROVAL A CONSTRUCTION PLAN WHICH DETAILS SCHEDULE AND TECHNIQUES TO BE USED PRIOR TO ANY CONNECTIONS TO EXISTING PIPES OR STRUCTURES. PARTIAL INTERRUPTION OF FLOWS TO BE SCHEDULED DURING LOW FLOW PERIODS FOR AS SHORT A DURATION AS PRACTICAL MAKE PROVISIONS FOR ACCOMMODATING PEAK FLOWS WHICH MAY OCCUR DURING CONSTRUCTION OPERATIONS. OWNER AND PLANT SUPERINTENDENT TO BE NOTIFIED WHEN ANY INTERRUPTIONS ARE TO BE MADE. SHOW LOCATION, WITH DIMENSIONS, ON PROJECT "RED LINE" DRAWINGS. NO SEPARATE PAY.
21. THE FINISHED GRADE ELEVATIONS SHOWN ARE INTENDED TO PROVIDE DRAINAGE AWAY FROM THE PLANT FACILITIES. MINOR FIELD CHANGES MAY BE NECESSARY TO PROVIDE ADEQUATE DRAINAGE. GRADE UNIFORMLY BETWEEN ELEVATIONS SHOWN TO PROVIDE DRAINAGE.
22. WALL PENETRATIONS 4 INCHES AND LARGER ARE TO BE MADE WITH WALL PIPES WITH INTEGRALLY CAST OR CONTINUOUSLY WELDED WALL COLLARS. SMALLER WALL PENETRATIONS ARE TO BE MADE WITH WALL SLEEVES OR WALL PIPES
23. MAINTAIN MINIMUM CLEARANCE OF 10 FEET FROM EDGE OF STRUCTURES TO CLOSEST EDGE OF PIPELINE ADJACENT AND PARALLEL TO EDGE OF STRUCTURE UNLESS OTHERWISE NOTED ON PLANS.
24. UNLESS OTHERWISE NOTED, ABOVE GROUND FITTINGS AND FIRST UNDERGROUND CONNECTION TO BE FLANGED
25. PLACE PARALLEL PIPING IN COMMON TRENCH WHEN FEASIBLE, MAINTAIN MINIMUM 4 FOOT HORIZONTAL SEPARATION FROM OUTSIDE OF PIPE TO OUTSIDE OF PIPE FOR PIPE 6"Ø AND ABOVE.
26. UNLESS OTHERWISE NOTED, ALL PROCESS PIPING TRENCHES UNDER PAVEMENT AND ONE FOOT FROM PAVEMENT EDGE TO BE BACKFILLED WITH CEMENT STABILIZED SAND TO 1-FOOT BELOW PAVEMENT SUBGRADE.
27. CONTRACTOR SHALL NOT OPERATE ANY EXISTING VALVES, PLANT APPURTENANCES OR PLANT EQUIPMENT. PROVIDE SUFFICIENT LEAD TIME FOR PLANT OPERATOR WHERE IT BECOMES NECESSARY TO ACTUATE OR DE-ACTUATE VALVES, PLANT APPURTENANCES OR PLANT EQUIPMENT.
28. CONTRACTOR SHALL REMOVE ALL MUD, DIRT AND DEBRIS DEPOSITED OR DROPPED ON EXISTING PAVEMENT DUE TO HIS CONSTRUCTION ACTIVITY DAILY.
29. CONSTRUCT WASTEWATER COLLECTION SYSTEMS, WATER LINES, AND STORM DRAINAGE IN ACCORDANCE WITH THE LATEST EDITION OF THE PUBLICATIONS STANDARD CONSTRUCTION SPECIFICATIONS FOR WASTEWATER COLLECTION SYSTEMS, WATER LINES, STORM DRAINAGE, AND STREET PAVING AND STANDARD CONSTRUCTION DETAILS FOR WASTEWATER COLLECTION SYSTEMS, WATER LINES, STORM DRAINAGE, AND STREET PAVING PUBLISHED BY THE CITY OF HOUSTON, DEPARTMENT OF PUBLIC WORKS AND ENGINEERING.
30. CONTRACTOR SHALL NOTIFY THE OFFICE OF THE CITY ENGINEER, DEPARTMENT OF PUBLIC WORKS AND ENGINEERING IN WRITING PRIOR TO COMMENCING CONSTRUCTION
31. ALIGNMENT, CENTERLINE CURVE DATA AND STATIONING TO BE VERIFIED BY ON-THE-GROUND SURVEY AND ELEVATIONS OF ALL CONNECTIONS TO EXISTING FACILITIES TO BE CONFIRMED PRIOR TO WORK START. CONTRACTOR TO NOTIFY OWNER'S REPRESENTATIVE OF ANY DISCREPANCIES PRIOR TO CONSTRUCTION.
32. NO EXTRA PAY WILL BE ALLOWED FOR WORK CALLED FOR ON THE PLANS BUT NOT INCLUDED ON THE BID SHEET. THIS INCIDENTAL WORK WILL BE REQUIRED AND SHALL BE INCLUDED UNDER THE PAY ITEM TO WHICH IT RELATES.
33. VEHICLE BARRIERS FOR PASSENGER VEHICLES SHALL BE DESIGNED TO RESIST A CONCENTRATED LOAD OF 6,000 LBS
34. CONTRACTOR SHALL BE RESPONSIBLE FOR DAMAGES TO EXISTING WATER, WASTEWATER, STORM WATER LINES AND TRAFFIC CONTROL DEVICES. DAMAGES SHALL BE REPAIRED IN ACCORDANCE WITH THE HOUSTON PUBLIC WORKS, STANDARD CONSTRUCTION SPECIFICATIONS FOR WASTEWATER COLLECTION SYSTEMS, STORM DRAINAGE, AND STREET PAVING AND STANDARD CONSTRUCTION DETAILS FOR WASTEWATER COLLECTION SYSTEMS, WATER LINES, STORM DRAINAGE, AND STREET PAVING, REFERENCED ABOVE, AT NO ADDITIONAL COST.
35. CONTRACTOR SHALL NOTIFY THE OFFICE OF THE CITY ENGINEER, HOUSTON PUBLIC WORKS @ 832-394-9098 OR VIA FAX AT 832-395-4424 FOR INSPECTION AT LEAST 48 HOURS PRIOR TO COMMENCING CONSTRUCTION.
36. ADEQUATE DRAINAGE SHALL BE MAINTAINED AT ALL TIMES DURING CONSTRUCTION AND ANY DRAINAGE DITCH OR STRUCTURE DISTURBED DURING CONSTRUCTION SHALL BE RESTORED TO EXISTING CONDITIONS OR BETTER.
37. CONTRACTOR SHALL TAKE NECESSARY PRECAUTIONS TO PROTECT ROOT SYSTEMS OF SHRUBS, PLANTS AND TREES ALONG THE AREA OF EXCAVATION.
38. CONTRACTOR SHALL MAINTAIN A SET OF REDLINE DRAWINGS AND RECORD AS-BUILT CONDITIONS DURING CONSTRUCTION. THESE REDLINE MARKED UP DRAWINGS WILL BE SUBMITTED TO THE DESIGN CONSULTANT WHO WILL MAKE THE CHANGES ON THE ORIGINAL TRACINGS, LABEL EACH SHEET IN THE SET AS "RECORD DRAWINGS", AND RETURN IT TO THE OFFICE OF THE CITY ENGINEER.

SANITARY SEWER CONSTRUCTION NOTES

1. ALL SEWERS SHALL BE CONSTRUCTED IN ACCORDANCE WITH THE CITY OF HOUSTON "STANDARD CONSTRUCTION SPECIFICATIONS FOR WASTEWATER COLLECTION SYSTEMS, WATER LINES, STORM DRAINAGE, STREET PAVING, AND TRAFFIC" AND ALL CURRENT AMENDMENTS THERETO AND BE SUBJECT TO A STANDARD EXFILTRATION TEST. TESTS ARE TO BE PERFORMED ON THE TOTAL FOOTAGE OF SEWER LINE INCLUDED IN THE PROJECT. REQUIREMENTS OF TEXAS ADMINISTRATIVE CODE, TITLE 30 CHAPTER 217, "DESIGN CRITERIA DOMESTIC WASTEWATER SYSTEMS" SHALL GOVERN WHERE CONFLICTS EXIST EXCEPT WHERE CITY REQUIREMENTS ARE MORE STRINGENT.
2. ALL MANHOLES ARE TO BE PER CITY OF HOUSTON STANDARD DETAILS DRAWING NUMBERS 02082-01, 02082-02, 02082N-02, 02082-03, AND 02082N-03 UNLESS OTHERWISE NOTED. USE 2010 VERSION AS APPLICABLE.
3. SANITARY SEWER MANHOLES WILL HAVE BEDDING AND BACKFILL PER CITY OF HOUSTON STANDARD DETAILS DRAWING NO. 02317-08 UNLESS OTHERWISE NOTED.
4. ALL SANITARY SEWER LINES UNDER PROPOSED OR FUTURE PAVEMENT AND TO A POINT ONE (1) FOOT BACK OF ALL PROPOSED OR FUTURE CURBS SHALL HAVE BEDDING PER CITY OF HOUSTON STANDARD DETAILS DRAWING NUMBERS 02317-01, 02317-02, OR 02317-03 AS APPLICABLE, WITH 1 ½ SACK CEMENT/CY STABILIZED SAND BACKFILL UP TO THE BOTTOM OF THE PAVEMENT SUBGRADE. 100 PSI PERFORMANCE RESULTS ARE STILL REQUIRED.
5. CONTRACTOR SHALL PROVIDE A MINIMUM HORIZONTAL CLEARANCE OF 9' FEET BETWEEN WATER LINES AND SANITARY SEWER MANHOLES AND LINES.
6. FOR SANITARY MANHOLE (MH) RIMS SET INSIDE OF OR @ CURB & GUTTER PAVEMENT AND/OR BELOW T.C., MANHOLE RIMS WILL BE SET FLUSH WITH AN ABUTTING PAVED SURFACE. THE (VALCUN, NEENAH OR EQUAL) HEAVY DUTY BOLTED SOLID MANHOLE COVER SHALL BE PROPERLY (AND SECURELY) ATTACHED AND SEALED TO ITS COMPATIBLE GASKETED FRAME BY USING BOTH A NEOPRENE GASKET AND (AT LEAST) 4 COUNTER-SUNK HEX-HEAD COARSE THREADED 1/2"-13 UNC STAINLESS STEEL BOLTS. THE HEAVY DUTY FRAME MANHOLE COVER SHALL BE SOLID (NO AIR HOLES). SAID FRAME SHALL BE BOTH EMBEDDED INTO THE MANHOLES TOP ALSO SECURELY ANCHORED TO THE UNDERLYING MANHOLE STRUCTURE WITH EITHER SECURELY ATTACHED EMBEDDED ANCHOR BOLTS OR THE CONCRETE MANHOLES EXPOSED REBARS WELDED TO THE FRAME OR THE OTHER EQUALLY SECURED METHODS TO PREVENT MANHOLE COVER/FRAME BLOW-OFFS/EJECTIONS.
7. ALL NEW AND EXISTING MANHOLES SHALL BE CORED WHEN MAKING CONNECTIONS THAT WERE NOT MADE BY THE MANUFACTURER CONTRACTOR SHALL USE RESILIENT CONNECTOR MEETING THE REQUIREMENTS OF ASTM C-923 FOR PIPE CONNECTOR.

CENTERPOINT ENERGY NOTES

CAUTION: UNDERGROUND GAS FACILITIES
LOCATIONS OF CENTERPOINT ENERGY MAIN LINES (TO INCLUDE CENTERPOINT ENERGY, INTRASTATE PIPELINE, L.L.C. WHERE APPLICABLE) ARE SHOWN IN AN APPROXIMATE LOCATION ONLY. SERVICE LINES ARE USUALLY NOT SHOWN. OUR SIGNATURE ON THESE PLANS ONLY INDICATES THAT OUR FACILITIES ARE SHOWN IN APPROXIMATE LOCATION. IT DOES NOT IMPLY THAT A CONFLICT ANALYSIS HAS BEEN MADE. THE CONTRACTOR SHALL CONTACT THE UTILITY COORDINATING COMMITTEE AT 1-800-545-6005 OR 811 A MINIMUM OF 48 HOURS PRIOR TO CONSTRUCTION TO HAVE MAIN AND SERVICE LINES FIELD LOCATED.

- WHEN CENTERPOINT ENERGY PIPELINE MARKINGS ARE NOT VISIBLE, CALL (713) 945-8037 (7:00 A.M. TO 4:30 P.M.) FOR STATUS OF LINE LOCATION REQUEST BEFORE EXCAVATION BEGINS.
- WHEN EXCAVATING WITHIN EIGHTEEN INCHES (18") OF THE INDICATED LOCATION OF CENTERPOINT ENERGY FACILITIES, ALL EXCAVATION MUST BE ACCOMPLISHED USING NON-MECHANIZED EXCAVATION PROCEDURES.
- WHEN CENTERPOINT ENERGY FACILITIES ARE EXPOSED, SUFFICIENT SUPPORT MUST BE PROVIDED TO THE FACILITIES TO PREVENT EXCESSIVE STRESS ON THE PIPING.
- FOR EMERGENCIES REGARDING GAS LINES CALL (713) 659-3552 OR (713) 207-4200.

THE CONTRACTOR IS FULLY RESPONSIBLE FOR ANY DAMAGES CAUSED BY HIS FAILURE TO EXACTLY LOCATE AND PRESERVE THESE UNDERGROUND FACILITIES.

WARNING: OVERHEAD ELECTRICAL LINES
OVERHEAD LINES MAY EXIST ON THE PROPERTY. THE LOCATION OF OVERHEAD LINES HAS NOT BEEN SHOWN ON THESE DRAWINGS AS THE LINES ARE CLEARLY VISIBLE, BUT YOU SHOULD LOCATE THEM PRIOR TO BEGINNING ANY CONSTRUCTION. TEXAS LAW, SECTION 752, HEALTH & SAFETY CODE FORBIDS ACTIVITIES THAT OCCUR IN CLOSE PROXIMITY TO HIGH VOLTAGE LINES, SPECIFICALLY:

- ANY ACTIVITY WHERE PERSON OR THINGS MAY COME WITHIN SIX (6) FEET OF LIVE OVERHEAD HIGH VOLTAGE LINES; AND
- OPERATING A CRANE, DERRICK, POWER SHOVEL, DRILLING RIG, PILE DRIVER, HOISTING EQUIPMENT OR SIMILAR APPARATUS WITHIN 10 FEET OF LIVE OVERHEAD HIGH VOLTAGE LINES.

PARTIES RESPONSIBLE FOR THE WORK, INCLUDING CONTRACTORS, ARE LEGALLY RESPONSIBLE FOR SAFETY OF CONSTRUCTION WORKERS UNDER THIS LAW. THIS LAW CARRIES BOTH CRIMINAL AND CIVIL LIABILITY. TO ARRANGE FOR LINES TO BE TURNED OFF OR REMOVED CALL CENTERPOINT ENERGY AT 713-207-2222.

ACTIVITIES ON OR ACROSS CENTERPOINT ENERGY FEE OR EASEMENT PROPERTY
NO APPROVAL TO USE, CROSS OR OCCUPY CENTERPOINT FEE OR EASEMENT PROPERTY IS GIVEN. IF YOU NEED TO USE CENTERPOINT PROPERTY, PLEASE CONTACT OUR SURVEYING & RIGHT OF WAY DIVISION AT (713) 207-6348 OR (713) 207-5769

AT&T TEXAS / SWBT FACILITIES

1. THE LOCATIONS OF AT&T TEXAS/SWBT FACILITIES ARE SHOWN IN AN APPROXIMATE WAY ONLY. THE CONTRACTOR SHALL DETERMINE THE EXACT LOCATION BEFORE COMMENCING WORK. HE AGREES TO BE FULLY RESPONSIBLE FOR ANY AND ALL DAMAGES WHICH MIGHT BE OCCASIONED BY THIS FAILURE TO EXACTLY LOCATE AND PRESERVE THESE UNDERGROUND UTILITIES.
2. THE CONTRACTOR SHALL CALL 1-800-344-8377 (TEXAS 811) A MINIMUM OF 48 HOURS PRIOR TO CONSTRUCTION TO HAVE UNDERGROUND LINES FIELD LOCATED.
3. WHEN EXCAVATING WITHIN EIGHTEEN INCHES (18") OF THE INDICATED LOCATION OF AT&T TEXAS/SWBT FACILITIES, ALL EXCAVATIONS MUST BE ACCOMPLISHED USING NON-MECHANIZED EXCAVATION PROCEDURES. WHEN BORING, THE CONTRACTOR SHALL EXPOSE THE AT&T TEXAS/SWBT FACILITIES.
4. WHEN AT&T TEXAS/SWBT FACILITIES ARE EXPOSED, THE CONTRACTOR WILL PROVIDE SUPPORT TO PREVENT DAMAGE TO THE CONDUIT DUCTS OR CABLES. WHEN EXCAVATING NEAR TELEPHONE POLES THE CONTRACTOR SHALL BRACE THE POLE FOR SUPPORT.
5. THE PRESENCE OR ABSENCE OF AT&T TEXAS/SWBT UNDERGROUND CONDUIT FACILITIES OR BURIED CABLE FACILITIES SHOWN ON THESE PLANS DOES NOT MEAN THAT THERE ARE NO DIRECT BURIED CABLES OR OTHER CABLES IN CONDUIT IN THE AREA.
6. PLEASE CONTACT THE AT&T TEXAS DAMAGE PREVENTION MANAGER KEVIN RAY AT (713) 614-1983 OR E-MAIL HIM AT KR7896@ATT.COM IF CABLE LOCATE REQUESTS ARE NOT COMPLETED FOR OUR AT&T TEXAS/SWBT FACILITIES.

STANDARD HCFCD NOTES FOR CONSTRUCTION DRAWINGS

1. OBTAIN AND COMPLY WITH ALL APPLICABLE CITY, COUNTY, STATE, AND FEDERAL PERMITS AND APPROVALS, WITH ASSISTANCE FROM ENGINEER, IF NECESSARY. OBTAIN PERMIT (CERTIFICATION) FROM HARRIS COUNTY ENGINEER TO ENTER HARRIS COUNTY FLOOD CONTROL DISTRICT RIGHT-OF-WAY.
2. NOTIFY THE HARRIS COUNTY FLOOD CONTROL DISTRICT'S DEVELOPMENT COORDINATION AND INSPECTION DEPARTMENT IN WRITING AT LEAST 48 HOURS PRIOR TO CONSTRUCTION. SUBMIT THE HCFCD 48 HOUR PRE-CONSTRUCTION NOTIFICATION FORM, A COPY OF THE APPROVED CONSTRUCTION DRAWINGS, AND A COPY OF THE CORPS OF ENGINEERS INDIVIDUAL SECTION 404 PERMIT OR COMPLIANCE WITH NATIONWIDE PERMIT, IF APPLICABLE, TO HCFCD, 9900 NORTHWEST FREEWAY, HOUSTON, TEXAS 77092, ATTN: DEVELOPMENT COORDINATION AND INSPECTION DEPT. BY HAND DELIVERY, BY EMAIL DCID@HCFCD.ORG, OR FAX TO 713-684-4129 (FAX NUMBER).
3. ENGINEER SHALL SUBMIT CERTIFICATION LETTER AND RECORD DRAWINGS TO THE HARRIS COUNTY FLOOD CONTROL DISTRICT'S DEVELOPMENT COORDINATION AND INSPECTION SECTION REQUESTING INSPECTION OF ITEMS CONSTRUCTED IN HARRIS COUNTY FLOOD CONTROL DISTRICT RIGHT-OF-WAY. PRIOR TO REQUESTING INSPECTION, THE DRAINAGE RIGHT-OF-WAY AND/OR EASEMENTS SHALL BE STAKED AND FLAGGED.
4. PROTECT, MAINTAIN, AND RESTORE EXISTING BACKSLOPE DRAINAGE SYSTEMS.
5. BACKSLOPE SWALE AND INTERCEPTOR STRUCTURE ELEVATIONS AND LOCATIONS SHOWN ON PLANS ARE APPROXIMATE. FINAL ELEVATIONS AND LOCATIONS SHALL BE FIELD VERIFIED BY THE ENGINEER PRIOR TO INSTALLATION.
6. ESTABLISH TURF GRASS ON ALL DISTURBED AREAS WITHIN THE CHANNEL OR DETENTION RIGHT-OF-WAY, EXCEPT THE CHANNEL BOTTOM AND WHERE STRUCTURAL EROSION MEASURES ARE USED. MINIMUM ACCEPTANCE CRITERIA ARE 75% COVERAGE OF LIVE BERMUDA GRASS AND NO EROSION OR RILLS DEEPER THAN 4".
7. PERFORM ALL ACTIVITIES WITHIN HARRIS COUNTY FLOOD CONTROL DISTRICT RIGHT-OF-WAY IN ACCORDANCE WITH THE MOST RECENT HARRIS COUNTY FLOOD CONTROL DISTRICT STANDARD SPECIFICATIONS BOOK.
8. EXCAVATE CHANNEL FLOWLINE TO DESIGN ELEVATION AS SHOWN ON PLANS AND DOWNSTREAM, AS NECESSARY, TO ENSURE NO WATER REMAINS IN THE FACILITY (STORM SEWER, LATERAL CHANNEL, OR DRY BOTTOM DETENTION BASIN) DURING NORMAL WATER SURFACE CONDITIONS IN THE CHANNEL, SO THE FACILITY WILL FUNCTION AS INTENDED. FOR WET BOTTOM DETENTION BASINS, ENSURE NO WATER IS ABOVE THE DESIGN LEVEL IN THE WET BOTTOM DURING NORMAL WATER SURFACE CONDITIONS IN THE CHANNEL.
9. MAINTAIN FLOW IN CHANNEL DURING CONSTRUCTION AND RESTORE CHANNEL TO ORIGINAL CONDITION.
10. REMOVE ALL EXCAVATED MATERIAL FROM THE HARRIS COUNTY FLOOD CONTROL DISTRICT OR DRAINAGE RIGHT-OF-WAY. NO FILL IS TO BE PLACED WITHIN A DESIGNATED FLOOD PLAIN AREA WITHOUT FIRST OBTAINING A FILL PERMIT FROM THE APPROPRIATE JURISDICTIONAL AUTHORITY.

STORM CONSTRUCTION NOTES

1. STORM SEWER SHALL BE REINFORCED CONCRETE PIPE (C-76, CLASS III), AND SHALL BE INSTALLED, BEDDED, AND BACK FILLED IN ACCORDANCE WITH THE CITY OF HOUSTON DRAWING NOS. 2317-02, 02317-3, 02317-05, 02317-06, AND 02317-07 (OCT. 2002) AS APPLICABLE UNLESS OTHERWISE SHOWN ON THE DRAWINGS.
2. ALL SEWER UNDER PROPOSED OR FUTURE PAVEMENT AND TO A POINT ONE (1) FOOT BACK OF ALL PROPOSED OR FUTURE CURBS SHALL BE BACKFILLED WITH 1-1/2 SACK CEMENT/C.Y. STABILIZED SAND TO WITHIN ONE (1) FOOT OF SUBGRADE. THE REMAINING DEPTH OF TRENCH SHALL BE BACKFILLED WITH SUITABLE EARTH MATERIAL.
3. ALL TRENCH BACKFILL SHALL BE IN 8" LIFTS, WITH TESTS TAKEN AT 100 FOOT INTERVALS IN EACH LIFT, AND MECHANICALLY COMPACTED TO A DENSITY OF NOT LESS THAN 95% OF THE MAXIMUM DRY DENSITY AS DETERMINED BY THE STANDARD PROCTOR COMPACTION TEST (ASTM D-698/AASHTO T99).
4. CIRCULAR AND ELLIPTICAL REINFORCED CONCRETE PIPE SHALL BE INSTALLED USING RUBBER GASKET JOINT CONFORMING TO ASTM C443 AND ASTM C877 RESPECTIVELY.
5. ADJUST MANHOLE COVERS TO GRADE CONFORMING TO REQUIREMENTS OF SECTION 02086 – ADJUSTING MANHOLES, INLETS, AND VALVE BOXES TO GRADE.
6. THE CONTRACTOR SHALL BE RESPONSIBLE FOR PROTECTING, MAINTAINING, AND RESTORING ANY BACK SLOPE DRAINAGE SYSTEM DISTURBED AS A RESULT OF THIS WORK.
7. ALL DITCHES SHALL BE GRADED TO PROPOSED ELEVATIONS TO INSURE PROPER DRAINAGE. ALL OUTFALLS SHALL BE PROPERLY BACKFILLED AND COMPACTED. ALL DISTURBED AREA SHALL BE REGRADED, SEEDED, AND FERTILIZED.

GRADING NOTES

1. GENERAL CONTRACTOR AND ALL SUBCONTRACTORS SHALL VERIFY THE SUITABILITY OF ALL EXISTING AND PROPOSED SITE CONDITIONS INCLUDING GRADES AND DIMENSIONS BEFORE STARTING CONSTRUCTION. THE ENGINEER SHALL BE NOTIFIED IMMEDIATELY OF ANY DISCREPANCIES.
2. BEFORE STARTING CONSTRUCTION, CONTRACTOR SHALL VERIFY BENCHMARK ELEVATION AND NOTIFY ENGINEER IF ANY DISCREPANCY AND/OR CONFLICT IS FOUND.
3. CONTRACTOR SHALL ENSURE THERE IS POSITIVE DRAINAGE FROM THE PROPOSED BUILDINGS AND NO PONDING IN PAVED AREAS, AND SHALL NOTIFY ENGINEER IF ANY GRADING DISCREPANCIES ARE FOUND IN THE EXISTING AND PROPOSED GRADES PRIOR TO PLACEMENT OF PAVEMENT OR UTILITIES.
4. CONTRACTOR SHALL PROTECT ALL MANHOLE COVERS, VALVE COVERS, VAULT LIDS, FIRE HYDRANTS, POWER POLES, GUY WIRES, AND TELEPHONE BOXES THAT ARE TO REMAIN IN PLACE AND UNDISTURBED DURING CONSTRUCTION.
5. ALL EXISTING CONCRETE PAVING, SIDEWALK, AND CURB DEMOLITION SHALL BE REMOVED AND DISPOSED OF BY CONTRACTOR. DISPOSAL SHALL BE AT AN APPROVED OFF-SITE, LAWFUL LOCATION, UNLESS DIRECTED OTHERWISE BY THE OWNER.

WATER LINE NOTES

1. WATER LINES SHALL BE CONSTRUCTED IN ACCORDANCE WITH THE LATEST CITY OF HOUSTON INFRASTRUCTURE DESIGN MANUAL, STANDARD SPECIFICATION, AND CONSTRUCTION DETAILS.

WORK SEQUENCE

CONSTRUCT THE WORK IN PHASES DURING THE CONSTRUCTION PERIOD; COORDINATE CONSTRUCTION SCHEDULE AND OPERATIONS WITH THE CITY. ALL SCHEDULING AND COORDINATION SHALL BE SUBMITTED AND PRESENTED TO CITY CONSTRUCTION PROJECT MANAGER.

1. THE CONTRACTOR IS ALLOWED TO WORK ON THREE (3) SITES SIMULTANEOUSLY.
2. CONTRACTOR SHALL BE PARTIALLY SUBSTANTIALLY COMPLETED AT ONE SITE BEFORE MOVING TO ANOTHER SITE.
3. FULL SUBSTANTIAL COMPLETION FOR THE ENTIRE PROJECT WILL BE GIVEN UPON COMPLETION OF THE SIXTH (FINAL) SITE.

TRAFFIC NOTES

1. CONTRACTOR OR OWNER SHALL SUBMIT TRAFFIC CONTROL PLANS WITH THE MOBILITY PERMIT APPLICATION. THE PLANS SHALL BE DRAWN TO SCALE AND SEALED BY A LICENSED PROFESSIONAL ENGINEER IN THE STATE OF TEXAS.
2. THE GENERAL NOTES THAT SHALL BE INCLUDED ON THE TRAFFIC CONTROL PLAN CAN BE FOUND IN CHAPTER 15 (15.02.08 TRAFFIC CONTROL PLAN) OF THE CITY OF HOUSTON'S (CITY) INFRASTRUCTURE DESIGN MANUAL (IDM). BELOW ARE SEVERAL KEY NOTES FROM THE IDM TO BE AWARE OF:
3. THE CONTRACTOR SHALL PROVIDE AND INSTALL TRAFFIC CONTROL DEVICES IN CONFORMANCE WITH PART VI OF THE TEXAS MANUAL ON UNIFORM TRAFFIC CONTROL DEVICES (TMUTCD) LATEST EDITION WITH REVISIONS DURING THE ENTIRE CONSTRUCTION PERIOD.
4. NO WORK SHALL BE PERFORMED IN RESIDENTIAL AREAS FROM 7:00PM TO 7:00AM.
5. CONTRACTOR SHALL MAINTAIN APPROVED NUMBER OF LANES OF TRAFFIC IN EACH DIRECTION DURING CONSTRUCTION WORKING HOURS. TRAFFIC CONTROL PLANS SHALL INCLUDE ONE-WAY AND/OR DETOUR PLANS. CONTRACTOR SHALL MAINTAIN ADA COMPLAINT PEDESTRIAN ACCESS TO BUS STOPS AND ADEQUATE BUS ACCESS TO THE BUS STOP.
6. CONTRACTOR SHALL COVER OPEN PAVEMENT EXCAVATIONS FOR MINOR UTILITY WORK WITH ANCHORED STEEL PLATES DURING NON-WORKING HOURS, OPEN LANES FOR NORMAL TRAFFIC FLOW WHEN FEASIBLE.
7. CONTRACTOR SHALL SECURE LANE/SIDEWALK/BICYCLE FACILITY CLOSURE PERMITS FROM TRANSPORTATION & DRAINAGE OPERATIONS (MOBILITY PERMIT SECTION AT WWW.GIMS.HOUSTONTX.GOV) BEFORE IMPLEMENTING THE TRAFFIC CONTROL PLAN. THE APPLICATION MUST BE SUBMITTED AT LEAST TEN BUSINESS DAYS PRIOR TO THE IMPLEMENTATION OF THE TRAFFIC CONTROL PLAN AND/OR BEGINNING CONSTRUCTION WORK. THE CONTRACTOR SHALL PROVIDE TRAFFIC CONTROL PLANS, CONSTRUCTION SEQUENCING, AND CONSTRUCTION SCHEDULE WITH THE APPLICATION.
8. CONTRACTOR SHALL HAVE APPROVED TRAFFIC CONTROL PLAN AND PERMIT AT THE JOB SITE FOR INSPECTION AT ALL TIMES
9. ACCESS TO DRIVEWAYS ADJACENT TO THE CONSTRUCTION WORK ZONE SHALL BE MAINTAINED AT ALL TIMES AS MUCH AS POSSIBLE. ADDITIONAL CONES AND/OR DELINEATORS MAY BE REQUIRED TO DELINEATE THE DRIVEWAY ACCESS ROUTE THROUGH THE CONSTRUCTION WORK ZONE. A MINIMUM OF ONE TRAVEL LANE SHALL BE MAINTAINED ACROSS THE DRIVEWAY, UNLESS PRIOR WRITTEN APPROVAL IS OBTAINED FROM THE CITY OF HOUSTON.
10. ADDITIONAL OFF DUTY POLICE OFFICERS/FLAGGERS MAY BE REQUESTED TO DIRECT TRAFFIC WHEN LANES ARE BLOCKED AT THE DIRECTION OF THE CITY EVEN IF THEY ARE NOT SPECIFICALLY IDENTIFIED ON THE PROJECT PLANS.

GENERAL NOTES – METRO:

1. CONTRACTOR SHALL NOTIFY METRO AT 713-615-6195 TWO WEEKS PRIOR TO DISTURBING EXISTING BUS STOPS.
2. CONTRACTOR SHALL COORDINATE WITH METRO TO REMOVE EXISTING AMENITIES.
3. BUS STOPS SH

PLOTTED: 5/13/2026 6:20 PM

ABBREVIATIONS:

&	AND
@	AT
AB	ALL BELL
AC	ACRE / ASBESTOS CEMENT
AI/VR	AIR INLET / VACUUM RELIEF
APPROX	APPROXIMATELY
ASPH	ASPHALT
AVE	AVENUE
BL	BASELINE
B/B	BACK TO BACK
BC	BACK OF CURB
BFV	BUTTERFLY VALVE
BL	BUILDING LINE
BLDG	BUILDING
BLVD	BOULEVARD
CL	CENTER LINE
C/C	CENTER TO CENTER
CGMP	CORRUGATED GALVANIZED METAL PIPE
CMP	CORRUGATED METAL PIPE
CIP	CAST IRON PIPE
CLR	CLEARANCE
CO	CLEAN OUT
COH	CITY OF HOUSTON
CONC	CONCRETE
CONSTR	CONSTRUCTION
CPEE	CENTERPOINT ENERGY ELECTRIC
CPEG	CENTERPOINT ENERGY GAS
DIA	DIAMETER
DIP	DUCTILE IRON PIPE
DR	DRIVE
DWG	DRAWING
DWY	DRIVEWAY
E	EAST
EAP	EMERGENCY ACTION PLAN
EL	ELEVATION
EP	EDGE OF PAVEMENT
E/R	END OF RADIUS
ESMT	EASEMENT
EXST	EXISTING
FC	FACE OF CURB
F/F	FACE TO FACE
FH	FIRE HYDRANT
FL	FLOW LINE
FM	FORCE MAIN
FRP	FIBERGLASS-REINFORCED PLASTIC
FT	FEET
GPS	GLOBAL POSITIONING SYSTEM
GV	GATE VALVE
GV&B	GATE VALVE AND BOX
HCFCD	HARRIS COUNTY FLOOD CONTROL DISTRICT
HDPE	HIGH-DENSITY POLYETHYLENE
HGL	HYDRAULIC GRADE LINE
HP	HIGH PRESSURE
INV EL	INVERT ELEVATION
IP	INTERMEDIATE PRESSURE
IR	IRON ROD

ABBREVIATIONS:

J-BOX	JUNCTION BOX
JT	JOINT
JUNCT	JUNCTION
LDWL	LARGE DIAMETER WATER LINE
LF	LINEAR FEET
LN	LANE
LPT	LOW POINT
LS	LIFT STATION
LT	LEFT
MAX	MAXIMUM
METRO	METROPOLITAN TRANSIT AUTHORITY
MH	MANHOLE
MIN	MINIMUM
MON	MONUMENT
M.E.G	MATCH EXISTING GRADE
M.P.G	MATCH PROPOSED GRADE
N	NORTH
NA	NOT APPLICABLE
NAVD	NORTH AMERICAN VERTICAL DATUM
NG	NATURAL GROUND
NO	NUMBER
NOTAM	NOTICE TO AIR MISSIONS
NTS	NOT TO SCALE
OCC	ZERO CURB CUT
OS	OFFSET
OH	OVERHEAD
PC	POINT OF CURVE
PCC	POINT OF COMPOUND CURVATURE
PCCP	PRESTRESSED CONCRETE CYLINDER PIPE
PERM	PERMANENT
PGL	PROFILE GRADE LINE
PI	POINT OF INTERSECTION
PL	PROPERTY LINE
PNT	POINT
PPCA	POTENTIALLY PETROLEUM CONTAMINATED AREA
PRC	POINT OF REVERSE
PROP	PROPOSED
PSI	POUND PER SQUARE INCH
PT	POINT OF TANGENCY
PVC	POLYVINYL CHLORIDE PIPE / POINT OF VERTICAL CURVATURE
PVMT	PAVEMENT
PVI	POINT OF VERTICAL INTERSECTION
PVT	POINT OF VERTICAL TANGENCY

ABBREVIATIONS:

(R)	RECORD DRAWING
R	RADIUS
RCB	REINFORCED CONCRETE BOX
RCP	REINFORCED CONCRETE PIPE
RD	ROAD
REINF	REINFORCED
REM	REMOVABLE
RJ	RESTRAINED JOINT
ROW	RIGHT OF WAY
RR	RAILROAD
RRPM	REFLECTIVE REMOVABLE PAVEMENT MARKERS
RT	RIGHT
S	SOUTH
SAN	SANITARY
SCHED	SCHEDULE
SF	SQUARE FEET
SHT	SHEET
SSE	SANITARY SEWER EASEMENT
ST	STREET
STA	STATION
STD	STANDARD
STL	STEEL
STM	STORM
SWBT	SOUTHWESTERN BELL TELEPHONE
SWR	SEWER
SY	SQUARE YARD
TAN	TANGENT
TBM	TEMPORARY BENCHMARK
TEMP	TEMPORARY
TOB	TOP OF BANK
TOC	TOP OF CURB
TOP	TOP OF PAVEMENT
TOS	TOP OF STACK
TS&V	TAPPING SLEEVE AND VALVE
TXDOT	TEXAS DEPARTMENT OF TRANSPORTATION
TYP	TYPICAL
UE	UTILITY EASEMENT
UGND	UNDERGROUND
VC	VERTICAL CURVE
VPI	VERTICAL POINT OF INTERSECTION
W	WEST
W/	WITH
WL	WATER LINE
WLE	WATER LINE EASEMENT
WM	WATER METER
WP	WOOD POLE
WSEL	WATER SURFACE ELEVATION
WV	WATER VALVE
WWTP	WASTE WATER TREATMENT PLANT

NO.	DATE	REVISION	APP.

NOTICE:
FOR YOUR SAFETY, YOU ARE REQUIRED BY TEXAS LAW TO CALL 811 AT LEAST 48 HOURS BEFORE YOU DIG SO THAT UNDERGROUND LINES CAN BE MARKED. THIS SIGNATURE DOES NOT FULFILL YOUR OBLIGATION TO CALL 811

VERIFICATION OF PRIVATE UTILITY LINES

Date

CenterPoint Energy natural gas utilities shown. (Gas service lines are not shown). This signature not be used for conflict verification.

Signature valid for six months.

Date

CenterPoint Energy/UNDERGROUND Electrical Facilities Verification ONLY. (This signature verifies existing underground facilities – not to be used for conflict verification)

Signature valid for six months.

Date

Approved for AT&T underground conduit facilities only.
Signature valid for one year.

IDS Engineering Group
13430 NW. Freeway, Suite 700
Houston, Tx. 77040
713.462.3178
TxEng Firm 2726 | TxSurv Firm 10110700

SURVEYED BY: KUO & ASSOCIATES, INC.
TBPE FIRM #F-4578; TBPLS FIRM #1007560

THIS DOCUMENT IS RELEASED FOR THE PURPOSE OF REVIEW UNDER THE AUTHORITY OF MARCEL KHOUW, P.E. 101807 ON 05/27/2026. IT IS NOT TO BE USED FOR CONSTRUCTION PURPOSES.

CITY OF HOUSTON
HOUSTON PUBLIC WORKS

LIFT STATION RENEWAL AND REPLACEMENT FY 2023

ABBREVIATIONS

WBS NUMBER	FOR CITY OF HOUSTON USE ONLY
R-000267-0179-4	
DRAWING SCALE	
HORIZ: N/A VERT: N/A	
CITY OF HOUSTON PM	
NAWARAJ PANTA, P.E.	
DWG. NO. G-04	SHEET NO. 04 OF 361

FILE PATH: \\idseg.com\FS\Projects\0000\005708500 CoH Lift Stations - FY 2023\CAD\DWG\PRODUCTION\04-ABBREVIATIONS.dwg

PLOTTED: 5/13/2026 6:20 PM

EXISTING PLAN VIEW

- WATER METER
- WATER VALVE (GATE)
- WATER VALVE (BUTTERFLY)
- FIRE HYDRANT/FLUSHING VALVE
- TAPPING SLEEVE & VALVE
- REDUCER (8" W / 6" W)
- ROUND CONNECTION
- SANITARY SEWER CLEANOUT & MANHOLE (CO, SAN, SAN MH)
- STORM SEWER MANHOLE (STM, STM MH)
- STORM SEWER INLETS ('B', 'B–B', 'C', 'C–1', 'C–2', 'C–2A', 'GRATE')
- CULVERT PIPE AND HEADWALL
- TOP OF CURB ELEVATION (TC=XX.XX)
- GUTTER ELEVATION (G=XX.XX)
- TOP OF PAVEMENT ELEVATION (TP=XX.XX)
- CONTOUR LINE (XX.X')
- ROW LINE
- PROPERTY LINE
- LOT LINES
- EASEMENT LINE
- CENTER LINE OF ROW
- TRANSIT LINE
- EDGE OF DITCHES
- CENTER LINE OF DITCHES
- EDGE OF DITCHES
- FENCE LINE, WOOD
- FENCE LINE, CHAIN LINK
- FENCE LINE, BARBED WIRE
- FENCE LINE, HOG WIRE
- EDGE OF CONCRETE
- CURB LINE
- CONCRETE WALK
- EDGE OF ASPHALT
- EDGE OF SHELL OR GRAVEL
- DIMENSION LINE (28" / 3–17)
- AERIAL POWER LINE
- UNDERGROUND POWER LINE (UGP)
- GAS LINE (GAS)
- UNKNOWN UNDERGROUND LINE (MISC)
- OIL PIPELINE (IDENTIFY CONDUIT, OGP)
- UNDERGROUND TELECOMM LINE W/VAULT (UGT)
- AERIAL TELECOMM LINE (T)
- RAILROAD LINE
- WATER LINE (20" (AND SMALLER) WATER; 24" (LARGER THAN 20") WATER; LDWL)
- SANITARY SEWER LINE (24" (AND SMALLER) SANITARY SEWER; 30" (LARGER THAN 24") SANITARY SEWER; SAN)
- STORM SEWER LINE (24" (AND SMALLER) STORM SEWER; 30" (LARGER THAN 24") STORM SEWER; STM)
- SANITARY SEWER FORCE MAIN (FM)
- RECLAIMED WATER LINE (RWL)
- NON–POTABLE WATER LINE (NPW)
- GAS METER
- GAS VALVE
- PROPANE LINE (PROPANE)
- STEAM LINE (STEAM)
- MISC UNDERGROUND PIPELINE LABLE (A2)

PROPOSED PLAN VIEW

- WATER METER (WM)
- WATER VALVE (GATE) (WV)
- WATER VALVE (BUTTERFLY) (BFWV)
- FIRE HYDRANT/FLUSHING VALVE (FH, WV)
- TAPPING SLEEVE & VALVE (TS&V)
- REDUCER (12" / 8")
- ROUND CONNECTION
- SANITARY SEWER CLEANOUT & MANHOLE (CO, SAN MH)
- STORM SEWER MANHOLE (STM MH)
- STORM SEWER INLETS ('B', 'B–B', 'C', 'C–1', 'C–2', 'C–2A', 'GRATE')
- CULVERT PIPE AND HEADWALL
- TOP OF CURB ELEVATION
- GUTTER ELEVATION
- TOP OF PAVEMENT ELEVATION
- CONTOUR LINE
- ROW LINE
- PROPERTY LINE
- LOT LINES
- EASEMENT LINE
- CENTER LINE OF ROW
- TRANSIT LINE
- EDGE OF DITCHES
- CENTER LINE OF DITCHES
- EDGE OF DITCHES
- FENCE LINE, WOOD
- FENCE LINE, CHAIN LINK
- FENCE LINE, BARBED WIRE
- FENCE LINE, HOG WIRE
- EDGE OF CONCRETE
- CURB LINE
- CONCRETE WALK
- EDGE OF ASPHALT
- EDGE OF SHELL OR GRAVEL
- DIMENSION LINE (28" / 3–17)
- AERIAL POWER LINE
- UNDERGROUND POWER LINE (UGP)
- GAS LINE (GAS)
- UNKNOWN UNDERGROUND LINE (MISC)
- OIL PIPELINE (IDENTIFY CONDUIT, OGP)
- UNDERGROUND TELCOMM LINE W/ VAULT (UGT)
- AERIAL TELECOMM LINE (T)
- RAILROAD LINE
- WATER LINE (20" (AND SMALLER) WATER; 24" (LARGER THAN 20") WATER; LDWL)
- SANITARY SEWER LINE (24" (AND SMALLER) SANITARY SEWER; 30" (LARGER THAN 24") SANITARY SEWER)
- STORM SEWER LINE (24" (AND SMALLER) STORM SEWER; 30" (LARGER THAN 24") STORM SEWER)
- SANITARY SEWER FORCE MAIN (FM)
- RECLAIMED WATER LINE (RWL)
- NON–POTABLE WATER LINE (NPW)
- GAS METER
- GAS VALVE
- PROPANE LINE (PROPANE)
- STEAM LINE (STEAM)
- MISC UNDERGROUND PIPELINE LABLE (A2)
- MATCH LINE

EXISTING PLAN VIEW

- PAVING HEADER
- BUILDING, RESIDENTIAL (RES. 1–STORY BR, BLDG.)
- BUILDING, COMMERCIAL (COMM. 1–STORY BR, BLDG.)
- TREE
- HEDGE
- IRON PIPE OR IRON ROD MONUMENT (3/4" IP)
- POINT OF INTERSECTION (PI)
- POINT OF CURVE (PC)
- POINT OF TANGENCY (PT)
- POWER POLE (P)
- POWER POLE W/DOWN GUY (P)

EXISTING PROFILE VIEW

- NORTH OR EAST PROPERTY LINE
- SOUTH OR WEST PROPERTY LINE
- NORTH OR EAST CURB
- SOUTH OR WEST CURB
- NORTH OR EAST DITCH
- SOUTH OR WEST DITCH
- NORTH OR EAST NATURAL GROUND
- SOUTH OR WEST NATURAL GROUND
- NORTH OR EAST CULVERT (CULVERT)
- SOUTH OR WEST CULVERT (CULVERT)
- CENTERLINE OF ROW
- CENTERPOINT ENERGY CONDUIT (UGP)
- GAS LINE (GAS)
- WESTERN UNION (OGP)
- AT&T CONDUIT (UGT)
- WATER LINE (20" (AND SMALLER) WATER; 24" (LARGER THAN 20") WATER; W)
- SANITARY SEWER LINE (24" (AND SMALLER) SANITARY SEWER; 30" (LARGER THAN 24") SANITARY SEWER; SAN)
- STORM SEWER LINE (24" (AND SMALLER) STORM SEWER; 30" (LARGER THAN 24") STORM SEWER; STM)
- SANITARY SEWER FORCE MAIN (FM)
- RECLAIMED WATER LINE (RWL)
- NON–POTABLE WATER LINE (NPW)
- CENTERPOINT ENERGY MANHOLE
- AT&T MANHOLE
- WATER LINE MANHOLE (W)
- SANITARY SEWER MANHOLE & CLEANOUT
- STORM SEWER MANHOLE
- STORM SEWER INLET

PROPOSED PLAN VIEW

- PAVING HEADER
- BUILDING, RESIDENTIAL (RES. 1–STORY BR, BLDG.)
- BUILDING, COMMERCIAL (COMM. 1–STORY BR, BLDG.)
- TREE
- HEDGE
- IRON PIPE OR IRON ROD MONUMENT (3/4" IP)
- POINT OF INTERSECTION (PI)
- POINT OF CURVE (PC)
- POINT OF TANGENCY (PT)
- POWER POLE (P)
- POWER POLE W/DOWN GUY (P)

PROPOSED PROFILE VIEW

- NORTH OR EAST PROPERTY LINE
- SOUTH OR WEST PROPERTY LINE
- NORTH OR EAST CURB
- SOUTH OR WEST CURB
- NORTH OR EAST DITCH
- SOUTH OR WEST DITCH
- NORTH OR EAST NATURAL GROUND
- SOUTH OR WEST NATURAL GROUND
- NORTH OR EAST CULVERT (CULVERT)
- SOUTH OR WEST CULVERT (CULVERT)
- CENTERLINE OF ROW
- CENTERPOINT ENERGY CONDUIT (UGP)
- GAS LINE (GAS)
- WESTERN UNION (OGP)
- AT&T CONDUIT (UGT)
- WATER LINE (20" (AND SMALLER) WATER; 24" (LARGER THAN 20") WATER; W)
- SANITARY SEWER LINE (24" (AND SMALLER) SANITARY SEWER; 30" (LARGER THAN 24") SANITARY SEWER; SAN)
- STORM SEWER LINE (24" (AND SMALLER) STORM SEWER; 30" (LARGER THAN 24") STORM SEWER; STM)
- SANITARY SEWER FORCE MAIN (FM)
- RECLAIMED WATER LINE (RWL)
- NON–POTABLE WATER LINE (NPW)
- CENTERPOINT ENERGY MANHOLE
- AT&T MANHOLE
- WATER LINE MANHOLE (W)
- SANITARY SEWER MANHOLE & CLEANOUT
- STORM SEWER MANHOLE
- STORM SEWER INLET

MISC STANDARD ELEMENTS

- NORTH ARROW (N, W, E, S)
- BAR SCALE (20' 0' 20'; SCALE 1"=20')
- REVISION CLOUD/DELTA (1)

NO.	DATE	REVISION	APP.

NOTICE:
FOR YOUR SAFETY, YOU ARE REQUIRED BY TEXAS LAW TO CALL 811 AT LEAST 48 HOURS BEFORE YOU DIG SO THAT UNDERGROUND LINES CAN BE MARKED. THIS SIGNATURE DOES NOT FULFILL YOUR OBLIGATION TO CALL 811

VERIFICATION OF PRIVATE UTILITY LINES

Date

CenterPoint Energy natural gas utilities shown. (Gas service lines are not shown). This signature not be used for conflict verification.
Signature valid for six months.

Date

CenterPoint Energy/UNDERGROUND Electrical Facilities Verification ONLY. (This signature verifies existing underground facilities – not to be used for conflict verification)
Signature valid for six months.

Date

Approved for AT&T underground conduit facilities only.
Signature valid for one year.

IDS Engineering Group
13430 NW. Freeway, Suite 700
Houston, Tx. 77040
713.462.3178
TxEng Firm 2726 | TxSurv Firm 10110700

SURVEYED BY: KUO & ASSOCIATES, INC.
TBPE FIRM #F–4578; TBPLS FIRM #1007560

THIS DOCUMENT IS RELEASED FOR THE PURPOSE OF REVIEW UNDER THE AUTHORITY OF MARCEL KHOUW, P.E. 101807 ON 05/27/2026. IT IS NOT TO BE USED FOR CONSTRUCTION PURPOSES.

CITY OF HOUSTON
HOUSTON PUBLIC WORKS

LIFT STATION RENEWAL AND REPLACEMENT FY 2023

SYMBOLS LEGEND

WBS NUMBER	FOR CITY OF HOUSTON USE ONLY
R–000267–0179–4	
DRAWING SCALE	
HORIZ: N/A VERT: N/A	
CITY OF HOUSTON PM	
NAWARAJ PANTA, P.E.	
DWG. NO. G–05	SHEET NO. 05 OF 361

FILE PATH: \\idseg.com\FS\Projects\0000\005708500 CoH Lift Stations – FY 2023\CAD\DWG\PRODUCTION\05–SYMBOLS LEGEND.dwg

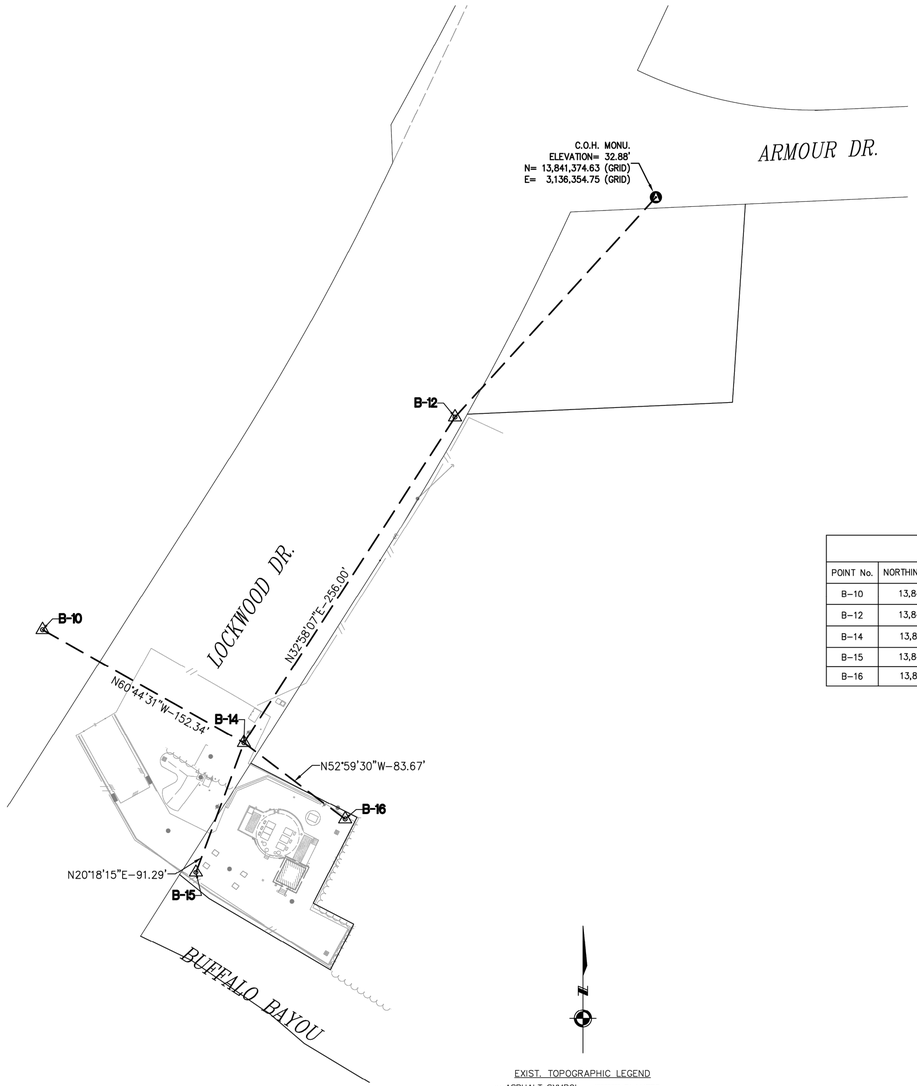

SURVEY BASELINE POINTS DATA (TEMPORARY BENCHMARK)						
POINT No.	NORTHING (SURFACE)	EASTING (SURFACE)	NORTHING (GRID)	EASTING (GRID)	ELEVATION	DESCRIPTION
B-10	13,842,888.63	3,136,357.70	13,841,089.29	3,135,950.02	22.00'	SET MAGNAIL W/SHINER
B-12	13,843,028.95	3,136,629.91	13,841,229.60	3,136,222.20	33.64'	SET 1/2" I.R. W/CAP
B-14	13,842,814.18	3,136,490.60	13,841,014.85	3,136,082.91	31.86'	SET 1/2" I.R. W/CAP
B-15	13,842,728.56	3,136,458.92	13,840,929.24	3,136,051.23	18.48'	SET 'X' CUT ON CONC.
B-16	13,842,763.81	3,136,557.41	13,840,964.49	3,136,149.71	18.94'	SET 'X' CUT ON CONC.

EXIST. TOPOGRAPHIC LEGEND

- ASPHALT SYMBOL
- B OR BB INLET
- BUSH
- C INLET
- CLEANOUT
- brick column
- DOWN GUY
- E INLET
- ELEC MANHOLE
- FIRE HYDRANT
- GAS METER
- GAS VALVE
- GATE
- GRATE INLET
- GRATE INLET
- MAIL BOX
- STORM MANHOLE
- SANITARY MANHOLE
- PLANTER
- POWER POLE
- POWER POLE W/LT.
- SIGN
- SIGNAL POLE
- SPRINKLER VALVE
- SPRINKLER HEAD
- STREET LIGHT/FLOOD LIGHT
- STREET LIGHT/PARKING LIGHT
- TREE
- TREE STUMP
- TREE-CREPE MYRTLE
- TREE-PINE
- WATER METER
- WATER VALVE
- IRRIGATION CONTROL VALVE

ABBREVIATIONS

BC – BACK OF CURB
EA – EDGE OF ASPHALT
EC – EDGE OF CONCRETE
EG – EDGE OF GRAVEL
FH – FIRE HYDRANT
FC – FENCE CORNER
LT – LIGHT POLE
MB – MAIL BOX
MH – MANHOLE
PP – POWER POLE
PP/LIGHT – POWER POLE W/LIGHT
STLT – STREET LIGHT
TRLT – TRAFFIC LIGHT
WM – WATER METER

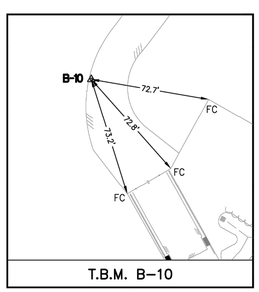

T.B.M. B–10

N.T.S.

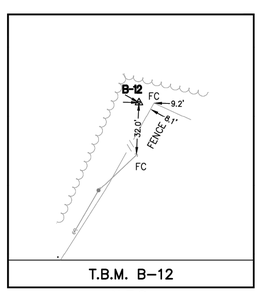

T.B.M. B–12

N.T.S.

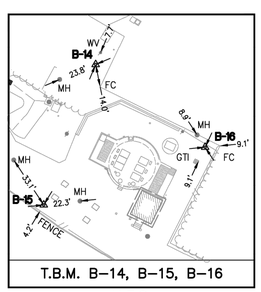

T.B.M. B–14, B–15, B–16

N.T.S.

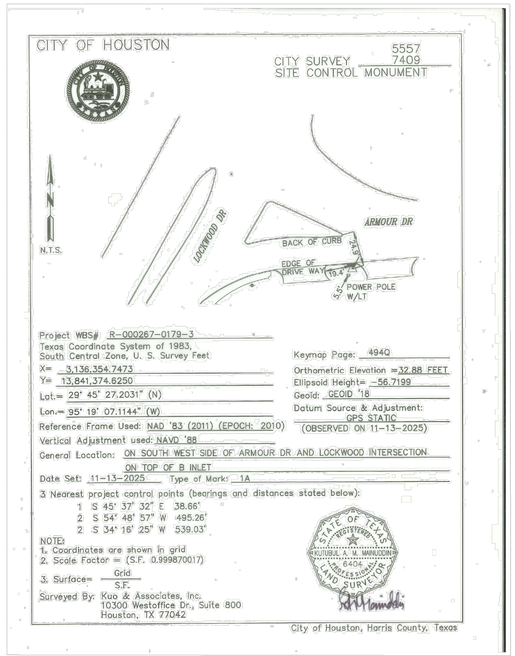

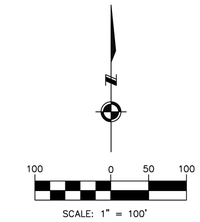

NO.	DATE	REVISION	APP.

BENCHMARK:

CITY OF HOUSTON MONUMENT 5557-7409 IS AN ALUMINUM DISK ON TOP OF INLET LOCATED ON HICKORY CREEK DR APPROXIMATELY 50 FEET EAST FROM THE INTERSECTION OF TRAILWOOD VILLAGE DR

ELEV. 40.68 FEET NAVD 1988, 2001 AJUSTMENT (PROJECT DATUM)
ELEV. 32.88 FEET NAVD 1988, (GEOID '18)*

* OBSERVED BY GPS SURVEYING AND PROCESSED IN REFERENCE TO THE CORS DATED OCTOBER 17, 2025.

VERTICAL DATUM ADJUSTMENT:

THE ELEVATION DIFFERENCE IN BETWEEN THE FLOODPLAIN REFERENCE MARK'S (RM 070375)PUBLISHED DATUM NAVD 1988, 2001 ADJUSTMENT AND DATUM NAVD 1988, (GEOID '18) IS 0.48'.

NAVD 1988, 2001 ADJ. ELEVATION
= NAVD 1988 (GEOID '18) ELEVATION + 7.80 FT

NOTE:

ALL BEARINGS AND DISTANCES ARE BASED ON TEXAS STATE PLANE COORDINATE SYSTEM, SOUTH CENTRAL ZONE NO. 4204, NAD83. ALL DISTANCES ARE IN SURFACE.

THE COORDINATES SHOWN HEREON ARE TEXAS SOUTH CENTRAL ZONE NO. 4204 STATE PLANE GRID COORDINATES (NAD83) AND MAY BE BROUGHT TO SURFACE BY DIVIDING BY THE COMBINED SCALE FACTOR 0.999870017.

LEGEND:

- **B-X** SURVEY CONTROL POINT NUMBER
- C–X DESIGN BASELINE POINT NUMBER
- ⚠ SURVEY CONTROL POINT
- ● DESIGN BASELINE POINT
- ✪ CITY OF HOUSTON MONUMENT
- S. BL: SURVEY BASELINE — — —

IDS Engineering Group
13430 NW. Freeway
Suite 700
Houston, Tx. 77040
713.462.3178
TxEng Firm 2726
TxSurv Firm 10110700

KUO & ASSOCIATES
ENGINEERING + SURVEYING
10300 Westoffice Dr., Suite 800, Houston, Texas 77042
Tel: 713-975-8769, Fax: 713-975-0920, www.kuoassociates.com
TBPELS Firm Registration No. F-4578
TBPELS Firm Registration No. 1007560

SURVEYED BY:
KUO & ASSOCIATES, LLC.
FB NO. P-6413

THIS DOCUMENT IS RELEASED FOR THE PURPOSE OF INTERIM REVIEW UNDER THE AUTHORITY OF
KUTUBUL A. M. MAINUDDIN, R.P.L.S.
TEXAS REG. NO.: 6404
ON 05/06/2026
IT IS NOT TO BE USED FOR PERMIT, BIDDING OR CONSTRUCTION PURPOSES

CITY OF HOUSTON
HOUSTON PUBLIC WORKS

COH LS REHABILITATION AND RECONSTRUCTION
LOCKWOOD DRIVE LS
SURVEY CONTROL MAP

WBS NUMBER	FOR CITY OF HOUSTON USE ONLY
R-000267-0179-3	
DRAWING SCALE	
1"=100'	
CITY OF HOUSTON PM	

DWG. NO.	
G-06	SHEET NO. 06 OF 361

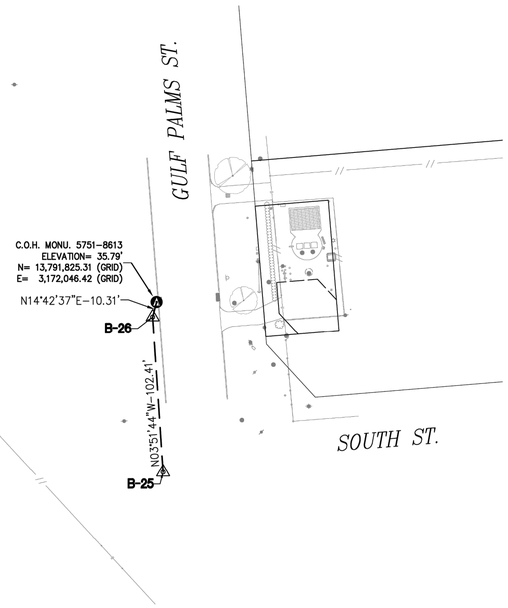

SURVEY BASELINE POINTS DATA (TEMPORARY BENCHMARK)						
POINT No.	NORTHING (SURFACE)	EASTING (SURFACE)	NORTHING (GRID)	EASTING (GRID)	ELEVATION	DESCRIPTION
B-25	13,793,506.09	3,172,463.06	13,791,713.17	3,172,050.70	36.67'	SET 'X' CUT ON CONC.
B-26	13,793,608.27	3,172,456.16	13,791,815.34	3,172,043.80	36.13'	SET 5/8" I.R. W/CAP

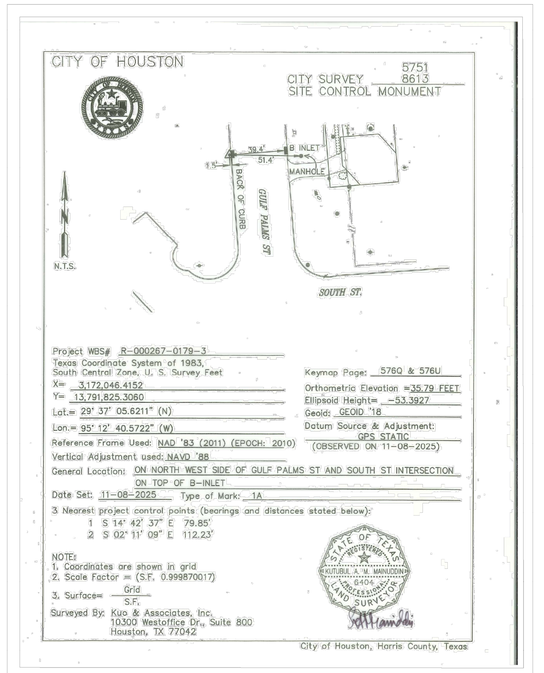

EXIST. TOPOGRAPHIC LEGEND

ASPHALT SYMBOL	PLANTER
B OR BB INLET	POWER POLE
BUSH	POWER POLE W/LT.
C INLET	SIGN
CLEANOUT	SIGNAL POLE
brick column	SPRINKER VALVE
DOWN GUY	SPRINKLER HEAD
E INLET	STREET LIGHT/FLOOD LIGHT
ELEC MANHOLE	STREET LIGHT/PARKING LIGHT
FIRE HYDRANT	TREE
GAS METER	TREE STUMP
GAS VALVE	TREE-CREPE MYRTLE
GATE	TREE-PINE
GRATE INLET	WATER METER
GRATE INLET	WATER VALVE
MAIL BOX	IRRIGATION CONTROL VALVE
STORM MANHOLE	
SANITARY MANHOLE	

ABBREVIATIONS

BC – BACK OF CURB
EA – EDGE OF ASPHALT
EC – EDGE OF CONCRETE
EG – EDGE OF GRAVEL
FH – FIRE HYDRANT
FC – FENCE CORNER
LT – LIGHT POLE
MB – MAIL BOX
MH – MANHOLE
PP – POWER POLE
PP/LIGHT – POWER POLE W/LIGHT
STLT – STREET LIGHT
TRLT – TRAFFIC LIGHT
WM – WATER METER

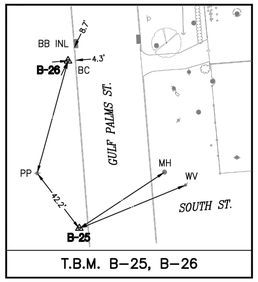

T.B.M. B-25, B-26

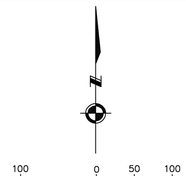

NO.	DATE	REVISION	APP.

BENCHMARK:

CITY OF HOUSTON MONUMENT 5751-8613 IS AN ALUMINUM DISC ON TOP OF A CONCRETE INLET LOCATED ON THE NORTHWEST SIDE OF THE INTERSECTION OF GULF PALMS ST. AND SOUTH ST.

ELEV. 37.22 FEET NAVD 1988, 2001 ADJUSTMENT (PROJECT DATUM)
ELEV. 35.78 FEET NAVD 1988, (GEOID 18')

VERTICAL DATUM ADJUSTMENT:

THE ELEVATION DIFFERENCE IN BETWEEN THE FLOODPLAIN REFERENCE MARKS (RM 090100) PUBLISHED DATUM NAVD 1988, 2001 ADJUSTMENT AND DATUM NAVD 1988, (GEOID '18) IS 1.44'.

NAVD 1988, 2001 ADJ. ELEVATION
=NAVD 1988 (GEOID '18) ELEVATION – 1.44 FT

NOTE:

ALL BEARINGS AND DISTANCES ARE BASED ON TEXAS STATE PLANE COORDINATE SYSTEM, SOUTH CENTRAL ZONE NO. 4204, NAD83. ALL DISTANCES ARE IN SURFACE.

THE COORDINATES SHOWN HEREON ARE TEXAS SOUTH CENTRAL ZONE NO. 4204 STATE PLANE GRID COORDINATES (NAD83) AND MAY BE BROUGHT TO SURFACE BY DIVIDING BY THE COMBINED SCALE FACTOR 0.999870017.

LEGEND:

B-X	SURVEY CONTROL POINT NUMBER
C–X	DESIGN BASELINE POINT NUMBER
◬	SURVEY CONTROL POINT
•	DESIGN BASELINE POINT
ⓒ	CITY OF HOUSTON MONUMENT
S. BL:	SURVEY BASELINE — — —

IDS Engineering Group
13430 NW. Freeway
Suite 700
Houston, Tx. 77040
713.462.3178
TxEng Firm 2726
TxSurv Firm 10110700

KUO & ASSOCIATES
ENGINEERING + SURVEYING
10300 Westoffice Dr., Suite 800, Houston, Texas 77042
Tel: 713-975-8769, Fax: 713-975-0920, www.kuoassociates.com
TBPELS Firm Registration No. F-4578
TBPELS Firm Registration No. 1007560

SURVEYED BY:
KUO & ASSOCIATES, LLC.
FB NO. P-6413

THIS DOCUMENT IS RELEASED FOR THE PURPOSE OF INTERIM REVIEW UNDER THE AUTHORITY OF
KUTUBUL A. M. MAINUDDIN, R.P.L.S.
TEXAS REG. NO.: 6404
ON 05/06/2026
IT IS NOT TO BE USED FOR PERMIT, BIDDING OR CONSTRUCTION PURPOSES

CITY OF HOUSTON
HOUSTON PUBLIC WORKS

COH LS REHABILITATION AND RECONSTRUCTION SOUTH POINT LS

SURVEY CONTROL MAP

WBS NUMBER	FOR CITY OF HOUSTON USE ONLY
R-000267-0179-3	
DRAWING SCALE	
1"=100'	
CITY OF HOUSTON PM	

DWG. NO.	
G-07	SHEET NO. 07 OF 361

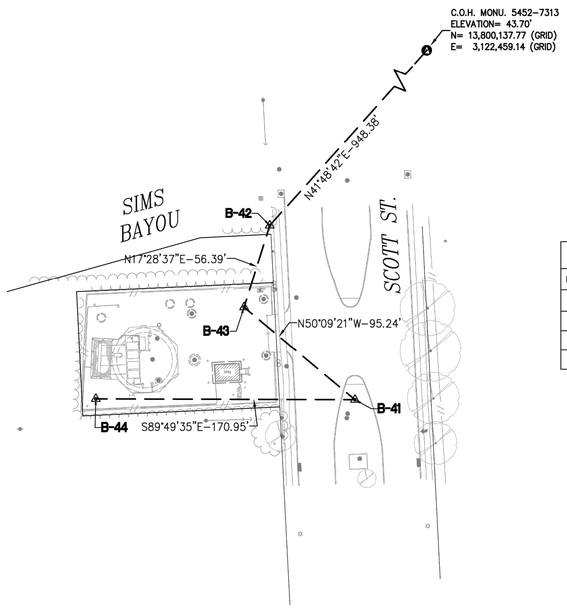

SURVEY BASELINE POINTS DATA (TEMPORARY BENCHMARK)						
POINT No.	NORTHING (SURFACE)	EASTING (SURFACE)	NORTHING (GRID)	EASTING (GRID)	ELEVATION	DESCRIPTION
B-41	13,801,110.08	3,122,288.95	13,799,316.17	3,121,883.11	39.76'	SET 5/8" I.R. W/CAP
B-42	13,801,224.89	3,122,232.76	13,799,430.97	3,121,826.93	40.04'	SET 'X' CUT ON CONC.
B-43	13,801,171.10	3,122,215.83	13,799,377.18	3,121,809.99	41.18'	SET 'X' CUT ON CONC.
B-44	13,801,110.60	3,122,118.00	13,799,316.69	3,121,712.18	41.60'	SET 'X' CUT ON CONC.

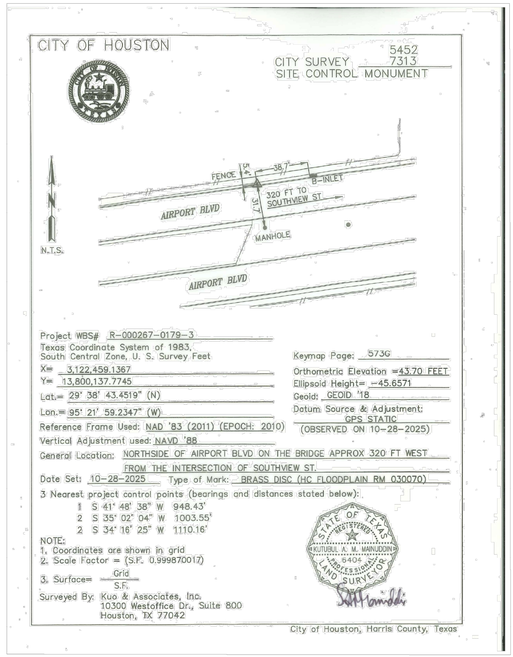

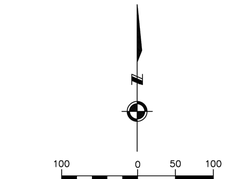

NO.	DATE	REVISION	APP.

BENCHMARK:

CITY OF HOUSTON MONUMENT 5452-7313 IS A BRASS DISC IN CONCRETE STAMPED 030070 LOCATED ON NORTHEAST CORNER ON AIRPORT BLVD BRIDGE APPROX. 0.1 MILE EAST FROM THE INTERSECTION OF SCOTT ST IN KEY MAP NO. 573G IN THE SIMS BAYOU WATERSHED

ELEV. 43.59 FEET NAVD 1988, 2001 AJUSTMENT (PROJECT DATUM)
ELEV. 43.70 FEET NAVD 1988, (GEOID 18')

VERTICAL DATUM AJUSTMENT:

THE ELEVATION DIFFERENCE IN BETWEEN THE FLOODPLAIN REFERENCE MARK'S (RM 030070) PUBLISHED DATUM NAVD 1988, 2001 ADJUSTMENT AND DATUM NAVD 1988, (GEOID '18) IS 0.11'.

NAVD 1988, 2001 ADJ. ELEVATION
=NAVD 1988 (GEOID '18) ELEVATION – 0.11 FT

NOTE:

ALL BEARINGS AND DISTANCES ARE BASED ON TEXAS STATE PLANE COORDINATE SYSTEM, SOUTH CENTRAL ZONE NO. 4204, NAD83. ALL DISTANCES ARE IN SURFACE.

THE COORDINATES SHOWN HEREON ARE TEXAS SOUTH CENTRAL ZONE NO. 4204 STATE PLANE GRID COORDINATES (NAD83) AND MAY BE BROUGHT TO SURFACE BY DIVIDING BY THE COMBINED SCALE FACTOR 0.999870017.

LEGEND:

B-X	SURVEY CONTROL POINT NUMBER
C-X	DESIGN BASELINE POINT NUMBER
⚠	SURVEY CONTROL POINT
•	DESIGN BASELINE POINT
ⓐ	CITY OF HOUSTON MONUMENT
S. BL:	SURVEY BASELINE — — —



EXIST. TOPOGRAPHIC LEGEND

ASPHALT SYMBOL	PLANTER
B OR BB INLET	POWER POLE
BUSH	POWER POLE W/LT.
C INLET	SIGN
CLEANOUT	SIGNAL POLE
brick column	SPRINKER VALVE
DOWN GUY	SPRINKLER HEAD
E INLET	STREET LIGHT/FLOOD LIGHT
ELEC MANHOLE	STREET LIGHT/PARKING LIGHT
FIRE HYDRANT	TREE
GAS METER	TREE STUMP
GAS VALVE	TREE-CREPE MYRTLE
GATE	TREE-PINE
GRATE INLET	WATER METER
GRATE INLET	WATER VALVE
MAIL BOX	IRRIGATION CONTROL VALVE
STORM MANHOLE	
SANITARY MANHOLE	

ABBREVIATIONS

BC – BACK OF CURB
EA – EDGE OF ASPHALT
EC – EDGE OF CONCRETE
EG – EDGE OF GRAVEL
FH – FIRE HYDRANT
FC – FENCE CORNER
LT – LIGHT POLE
MB – MAIL BOX
MH – MANHOLE
PP – POWER POLE
PP/LIGHT – POWER POLE W/LIGHT
STLT – STREET LIGHT
TRLT – TRAFFIC LIGHT
WM – WATER METER

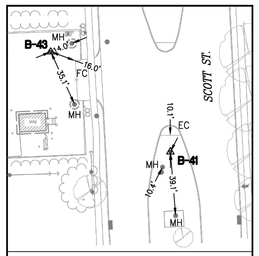

T.B.M. B-41, B-43

N.T.S.

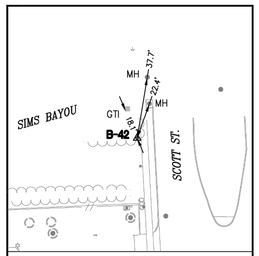

T.B.M. B-42

N.T.S.

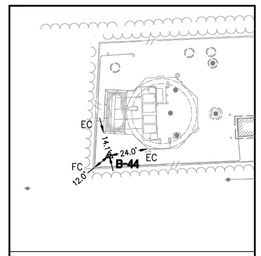

T.B.M. B-44

N.T.S.

IDS Engineering Group	13430 NW. Freeway, Suite 700, Houston, Tx. 77040, 713.462.3178, TxEng Firm 2726, TxSurv Firm 10110700
KUO & ASSOCIATES ENGINEERING + SURVEYING, 10300 Westoffice Dr., Suite 800, Houston, Texas 77042, Tel: 713-975-8769, Fax: 713-975-0920, www.kuoassociates.com, TBPELS Firm Registration No. F-4578, TBPELS Firm Registration No. 1007560	THIS DOCUMENT IS RELEASED FOR THE PURPOSE OF INTERIM REVIEW UNDER THE AUTHORITY OF KUTUBUL A. M. MAINUDDIN, R.P.L.S. TEXAS REG. NO.: 6404 ON 05/06/2026 IT IS NOT TO BE USED FOR PERMIT, BIDDING OR CONSTRUCTION PURPOSES
SURVEYED BY: KUO & ASSOCIATES, LLC. FB NO. P-6413	

CITY OF HOUSTON

HOUSTON PUBLIC WORKS

COH LS REHABILITATION AND RECONSTRUCTION SCOTT STREET LS

SURVEY CONTROL MAP

WBS NUMBER	FOR CITY OF HOUSTON USE ONLY
R-000267-0179-3	
DRAWING SCALE	
1"=100'	
CITY OF HOUSTON PM	

DWG. NO.	
G-08	SHEET NO. 08 OF 361

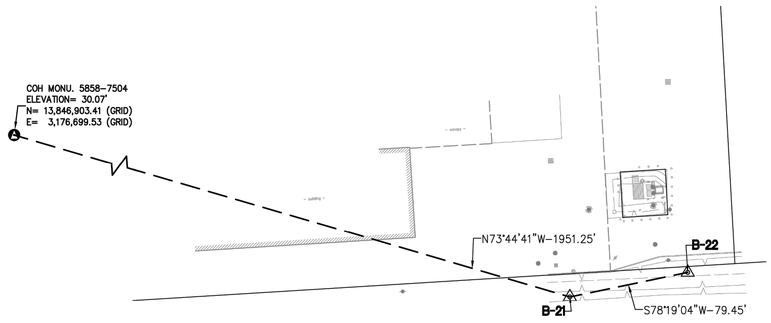

SURVEY BASELINE POINTS DATA (TEMPORARY BENCHMARK)						
POINT No.	NORTHING (SURFACE)	EASTING (SURFACE)	NORTHING (GRID)	EASTING (GRID)	ELEVATION	DESCRIPTION
B-21	13,848,157.42	3,178,985.69	13,846,357.40	3,178,572.48	15.86'	SET 1/2" I.R. W/CAP
B-22	13,848,173.51	3,179,063.50	13,846,373.48	3,178,650.27	15.94'	FND 5/8" I.R. W/CAP

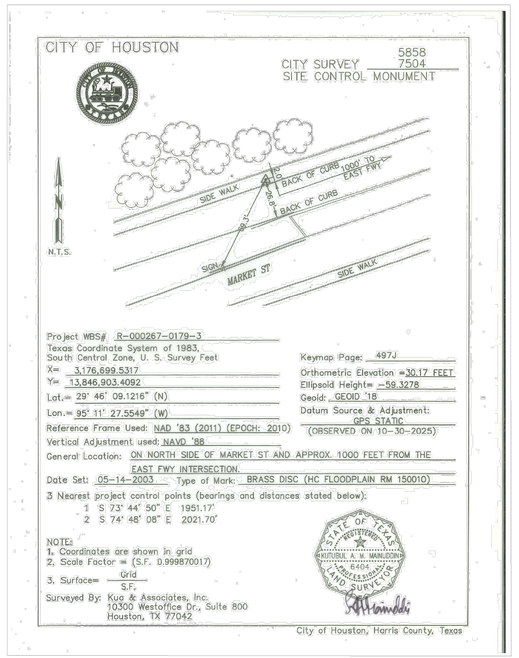

EXIST. TOPOGRAPHIC LEGEND

ASPHALT SYMBOL	PLANTER
B OR BB INLET	POWER POLE
BUSH	POWER POLE W/LT.
C INLET	SIGN
CLEANOUT	SIGNAL POLE
brick column	SPRINKLER VALVE
DOWN GUY	SPRINKLER HEAD
E INLET	STREET LIGHT/FLOOD LIGHT
ELEC MANHOLE	STREET LIGHT/PARKING LIGHT
FIRE HYDRANT	TREE
GAS METER	TREE STUMP
GAS VALVE	TREE-CREPE MYRTLE
GATE	TREE-PINE
GRATE INLET	WATER METER
GRATE INLET	WATER VALVE
MAIL BOX	IRRIGATION CONTROL VALVE
STORM MANHOLE	
SANITARY MANHOLE	

ABBREVIATIONS

BC – BACK OF CURB
EA – EDGE OF ASPHALT
EC – EDGE OF CONCRETE
EG – EDGE OF GRAVEL
FH – FIRE HYDRANT
FC – FENCE CORNER
LT – LIGHT POLE
MB – MAIL BOX
MH – MANHOLE
PP – POWER POLE
PP/LIGHT – POWER POLE W/LIGHT
STLT – STREET LIGHT
TRLT – TRAFFIC LIGHT
WM – WATER METER

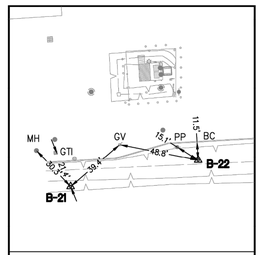

T.B.M. B-21, B-22

N.T.S.



NO.	DATE	REVISION	APP.

BENCHMARK:

CITY OF HOUSTON MONUMENT 5858-7504 IS A BRASS DISC IN CONCRETE STAMPED 150010, LOCATED ON THE NORTHWEST CORNER OF MARKET ST BRIDGE APPROXIMATELY 0.20 MILE SOUTHWEST FROM THE INTERSECTION OF IH 10 IN KEYMAP 497J IN THE GREENS BAYOU WATERSHED

ELEV. 30.07 FEET NAVD 1988, 2001 ADJUSTMENT (PROJECT DATUM)
ELEV. 30.17 FEET NAVD 1988, (GEOID 18')

VERTICAL DATUM ADJUSTMENT:

THE ELEVATION DIFFERENCE IN BETWEEN THE FLOODPLAIN REFERENCE MARK'S (RM 150010) PUBLISHED DATUM NAVD 1988, 2001 ADJUSTMENT AND DATUM NAVD 1988, (GEOID '18) IS 0.10'.

NAVD 1988, 2001 ADJ. ELEVATION
=NAVD 1988 (GEOID '18) ELEVATION – 0.10 FT

NOTE:

ALL BEARINGS AND DISTANCES ARE BASED ON TEXAS STATE PLANE COORDINATE SYSTEM, SOUTH CENTRAL ZONE NO. 4204, NAD83. ALL DISTANCES ARE IN SURFACE.

THE COORDINATES SHOWN HEREON ARE TEXAS SOUTH CENTRAL ZONE NO. 4204 STATE PLANE GRID COORDINATES (NAD83) AND MAY BE BROUGHT TO SURFACE BY DIVIDING BY THE COMBINED SCALE FACTOR 0.999870017.

LEGEND:

B-X	SURVEY CONTROL POINT NUMBER
C-X	DESIGN BASELINE POINT NUMBER
◬	SURVEY CONTROL POINT
●	DESIGN BASELINE POINT
Ⓐ	CITY OF HOUSTON MONUMENT
S. BL:	SURVEY BASELINE

IDS Engineering Group
13430 NW. Freeway
Suite 700
Houston, Tx. 77040
713.462.3178
TxEng Firm 2726
TxSurv Firm 10110700

KUO & ASSOCIATES
ENGINEERING + SURVEYING
10300 Westoffice Dr., Suite 800, Houston, Texas 77042
Tel: 713-975-8769, Fax: 713-975-0920, www.kuoassociates.com
TBPELS Firm Registration No. F-4578
TBPELS Firm Registration No. 1007560

SURVEYED BY:
KUO & ASSOCIATES, LLC.
FB NO. P-6413

THIS DOCUMENT IS RELEASED FOR THE PURPOSE OF INTERIM REVIEW UNDER THE AUTHORITY OF
KUTUBUL A. M. MAINUDDIN, R.P.L.S.
TEXAS REG. NO.: 6404
ON 05/06/2026
IT IS NOT TO BE USED FOR PERMIT, BIDDING OR CONSTRUCTION PURPOSES

CITY OF HOUSTON
HOUSTON PUBLIC WORKS

COH LS REHABILITATION AND RECONSTRUCTION
MARKET STREET LS
SURVEY CONTROL MAP

WBS NUMBER	FOR CITY OF HOUSTON USE ONLY
R-000267-0179-3	
DRAWING SCALE	
1"=100'	
CITY OF HOUSTON PM	

DWG. NO.	
G-09	SHEET NO. 09 OF 361

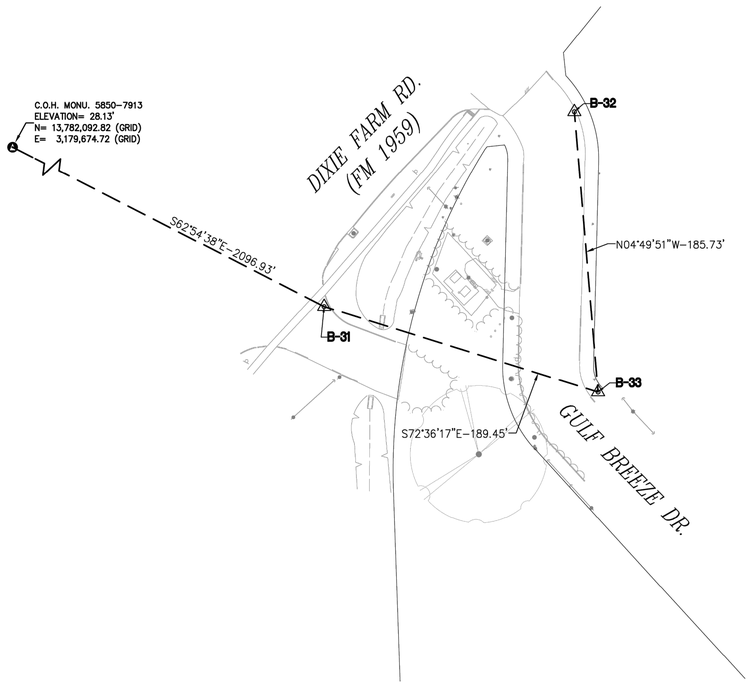

SURVEY BASELINE POINTS DATA (TEMPORARY BENCHMARK)						
POINT No.	NORTHING (SURFACE)	EASTING (SURFACE)	NORTHING (GRID)	EASTING (GRID)	ELEVATION	DESCRIPTION
B-31	13,782,929.58	3,181,954.97	13,781,138.03	3,181,541.37	33.41'	SET 'X' CUT ON CONC.
B-32	13,783,058.01	3,182,120.12	13,781,266.45	3,181,706.50	33.81'	SET 'X' CUT ON CONC.
B-33	13,782,872.94	3,182,135.76	13,781,081.40	3,181,722.14	32.67'	SET 1/2" I.R. W/CAP

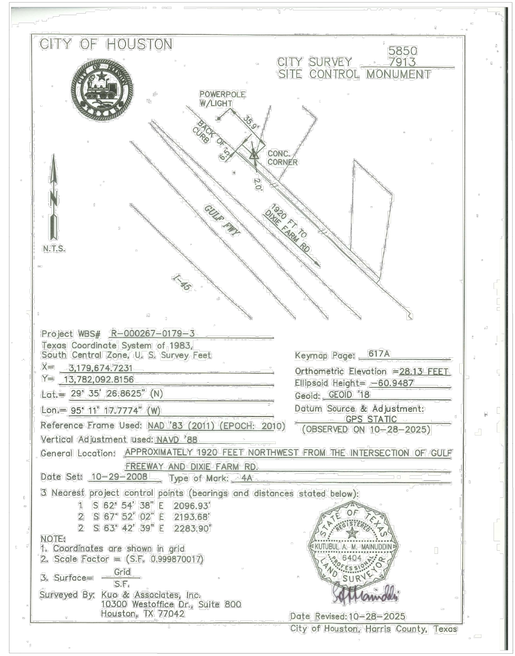

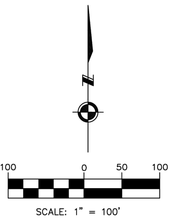

NO.	DATE	REVISION	APP.

BENCHMARK:

CITY OF HOUSTON MONUMENT 5850-7913 IS AN ALUMINUM DISC SET IN CONCRETE APPROXIMATELY 1920' NORTHWEST FROM THE INTERSECTION OF GULF FREEWAY AND DIXIE FARM RD.

ELEV. 29.92 FEET NAVD 1988, 2001 AJUSTMENT (PROJECT DATUM)
ELEV. 28.13 FEET NAVD 1988, (GEOID 18')

VERTICAL DATUM ADJUSTMENT:

THE ELEVATION DIFFERENCE IN BETWEEN THE FLOODPLAIN REFERENCE MARK'S (RM 010433) PUBLISHED DATUM NAVD 1988, 2001 ADJUSTMENT AND DATUM NAVD 1988, (GEOID '18) IS 0.10'.

NAVD 1988, 2001 ADJ. ELEVATION
=NAVD 1988 (GEOID '18) ELEVATION + 1.79 FT

NOTE:

ALL BEARINGS AND DISTANCES ARE BASED ON TEXAS STATE PLANE COORDINATE SYSTEM, SOUTH CENTRAL ZONE NO. 4204, NAD83. ALL DISTANCES ARE IN SURFACE.

THE COORDINATES SHOWN HEREON ARE TEXAS SOUTH CENTRAL ZONE NO. 4204 STATE PLANE GRID COORDINATES (NAD83) AND MAY BE BROUGHT TO SURFACE BY DIVIDING BY THE COMBINED SCALE FACTOR 0.999870017.

LEGEND:

B-X	SURVEY CONTROL POINT NUMBER
C-X	DESIGN BASELINE POINT NUMBER
▲	SURVEY CONTROL POINT
•	DESIGN BASELINE POINT
⊕	CITY OF HOUSTON MONUMENT
S. BL:	SURVEY BASELINE

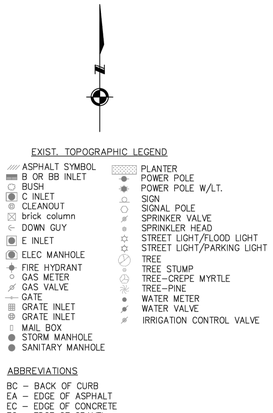

EXIST. TOPOGRAPHIC LEGEND

- ASPHALT SYMBOL
- B OR BB INLET
- BUSH
- C INLET
- CLEANOUT
- brick column
- DOWN GUY
- E INLET
- ELEC MANHOLE
- FIRE HYDRANT
- GAS METER
- GAS VALVE
- GATE
- GRATE INLET
- GRATE INLET
- MAIL BOX
- STORM MANHOLE
- SANITARY MANHOLE
- PLANTER
- POWER POLE
- POWER POLE W/LT.
- SIGN
- SIGNAL POLE
- SPRINKLER VALVE
- SPRINKLER HEAD
- STREET LIGHT/FLOOD LIGHT
- STREET LIGHT/PARKING LIGHT
- TREE
- TREE STUMP
- TREE-CREPE MYRTLE
- TREE-PINE
- WATER METER
- WATER VALVE
- IRRIGATION CONTROL VALVE

ABBREVIATIONS

BC – BACK OF CURB
EA – EDGE OF ASPHALT
EC – EDGE OF CONCRETE
EG – EDGE OF GRAVEL
FH – FIRE HYDRANT
FC – FENCE CORNER
LT – LIGHT POLE
MB – MAIL BOX
MH – MANHOLE
PP – POWER POLE
PP/LIGHT – POWER POLE W/LIGHT
STLT – STREET LIGHT
TRLT – TRAFFIC LIGHT
WM – WATER METER

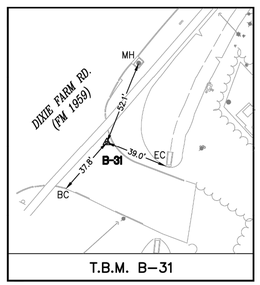

T.B.M. B-31

N.T.S.

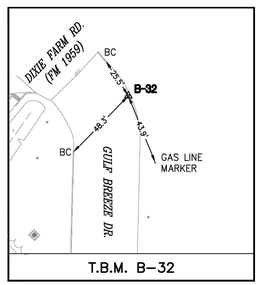

T.B.M. B-32

N.T.S.

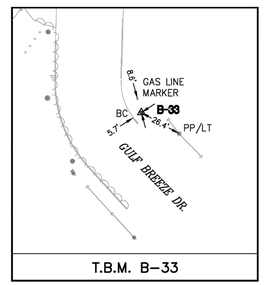

T.B.M. B-33

N.T.S.

IDS Engineering Group
13430 NW. Freeway
Suite 700
Houston, Tx. 77040
713.462.3178
TxEng Firm 2726
TxSurv Firm 10110700

KUO & ASSOCIATES
ENGINEERING + SURVEYING
10300 Westoffice Dr., Suite 800, Houston, Texas 77042
Tel: 713-975-9769, Fax: 713-975-0920, www.kuoassociates.com
TBPELS Firm Registration No. F-4578
TBPELS Firm Registration No. 1007560

SURVEYED BY:
KUO & ASSOCIATES, LLC.
FB NO. P-6413

THIS DOCUMENT IS RELEASED FOR THE PURPOSE OF INTERIM REVIEW UNDER THE AUTHORITY OF
KUTUBUL A. M. MAINUDDIN, R.P.L.S.
TEXAS REG. NO.: 6404
ON 05/06/2026
IT IS NOT TO BE USED FOR PERMIT, BIDDING OR CONSTRUCTION PURPOSES

CITY OF HOUSTON
HOUSTON PUBLIC WORKS

COH LS REHABILITATION AND RECONSTRUCTION
MUD 067 LS

SURVEY CONTROL MAP

WBS NUMBER	FOR CITY OF HOUSTON USE ONLY
R-000267-0179-3	
DRAWING SCALE	
1"=100'	
CITY OF HOUSTON PM	

DWG. NO.	
G-10	SHEET NO. 10 OF 361

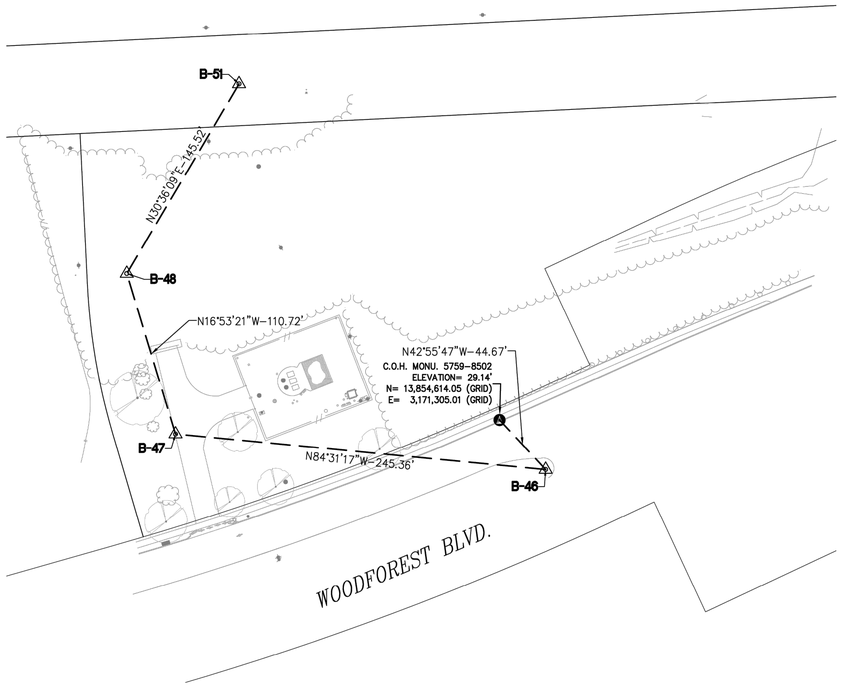

SURVEY BASELINE POINTS DATA (TEMPORARY BENCHMARK)						
POINT No.	NORTHING (SURFACE)	EASTING (SURFACE)	NORTHING (GRID)	EASTING (GRID)	ELEVATION	DESCRIPTION
B-46	13,856,382.44	3,171,747.70	13,854,581.35	3,171,335.43	30.04'	SET 'X' CUT ON CONC.
B-47	13,856,405.87	3,171,503.47	13,854,604.77	3,171,091.22	27.64'	SET 'X' CUT ON CONC.
B-48	13,856,511.81	3,171,471.30	13,854,710.70	3,171,059.06	28.12'	SET 1/2" I.R. W/CAP
B-51	13,856,637.06	3,171,545.38	13,854,835.93	3,171,133.13	29.49'	SET 'X' MARK

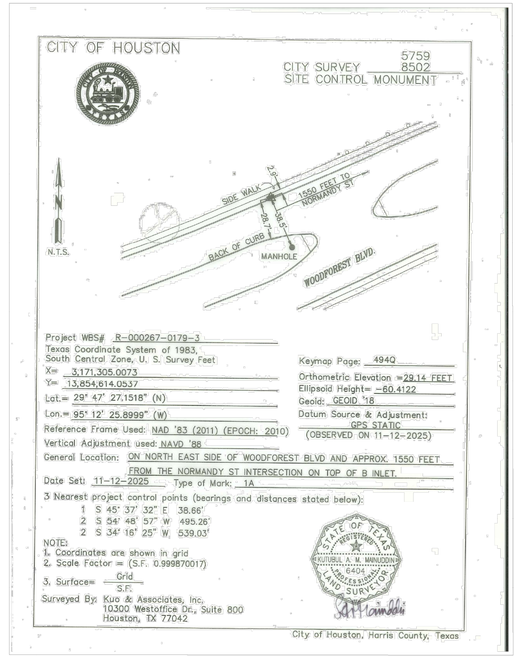



EXIST. TOPOGRAPHIC LEGEND

- ASPHALT SYMBOL
- B OR BB INLET
- BUSH
- C INLET
- CLEANOUT
- brick column
- DOWN GUY
- E INLET
- ELEC MANHOLE
- FIRE HYDRANT
- GAS METER
- GAS VALVE
- GATE
- GRATE INLET
- GRATE INLET
- MAIL BOX
- STORM MANHOLE
- SANITARY MANHOLE
- PLANTER
- POWER POLE
- POWER POLE W/LT.
- SIGN
- SIGNAL POLE
- SPRINKLER VALVE
- SPRINKLER HEAD
- STREET LIGHT/FLOOD LIGHT
- STREET LIGHT/PARKING LIGHT
- TREE
- TREE STUMP
- TREE-CREPE MYRTLE
- TREE-PINE
- WATER METER
- WATER VALVE
- IRRIGATION CONTROL VALVE

ABBREVIATIONS

BC – BACK OF CURB
EA – EDGE OF ASPHALT
EC – EDGE OF CONCRETE
EG – EDGE OF GRAVEL
FH – FIRE HYDRANT
FC – FENCE CORNER
LT – LIGHT POLE
MB – MAIL BOX
MH – MANHOLE
PP – POWER POLE
PP/LIGHT – POWER POLE W/LIGHT
STLT – STREET LIGHT
TRLT – TRAFFIC LIGHT
WM – WATER METER

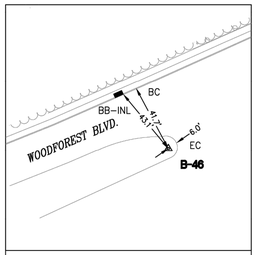

T.B.M. B-46

N.T.S.

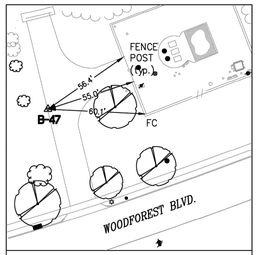

T.B.M. B-47

N.T.S.

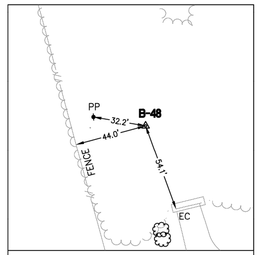

T.B.M. B-46

N.T.S.

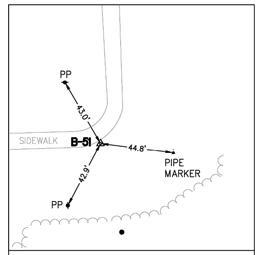

T.B.M. B-51

N.T.S.

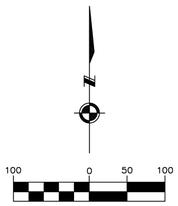

NO.	DATE	REVISION	APP.

BENCHMARK:

CITY OF HOUSTON MONUMENT 5759-8502 IS AN ALUMINUM DISK ON TOP OF INLET LOCATED ALONG WOODFOREST BLVD APPROXIMATELY 450 FEET WEST FROM THE GREENS BAYOU BRIDGE

ELEV. 32.40 FEET NAVD 1988, 2001 AJUSTMENT(PROJECT DATUM)
ELEV. 29.14 FEET NAVD 1988, (GEOID '18)*

* OBSERVED BY GPS SURVEYING AND PROCESSED IN REFERENCE TO THE CORS DATED NOVEMBER 12, 2025.

VERTICAL DATUM ADJUSTMENT:

THE ELEVATION DIFFERENCE IN BETWEEN THE FLOODPLAIN REFERENCE MARK'S (RM 150200) PUBLISHED DATUM NAVD 1988, 2001 ADJUSTMENT AND DATUM NAVD 1988, (GEOID '18) IS 3.18'.

NAVD 1988, 2001 ADJ. ELEVATION
= NAVD 1988 (GEOID '18) ELEVATION + 3.18 FT

NOTE:

ALL BEARINGS AND DISTANCES ARE BASED ON TEXAS STATE PLANE COORDINATE SYSTEM, SOUTH CENTRAL ZONE NO. 4204, NAD83. ALL DISTANCES ARE IN SURFACE.

THE COORDINATES SHOWN HEREON ARE TEXAS SOUTH CENTRAL ZONE NO. 4204 STATE PLANE GRID COORDINATES (NAD83) AND MAY BE BROUGHT TO SURFACE BY DIVIDING BY THE COMBINED SCALE FACTOR 0.999870017.

LEGEND:

B-X	SURVEY CONTROL POINT NUMBER
C-X	DESIGN BASELINE POINT NUMBER
⚠	SURVEY CONTROL POINT
•	DESIGN BASELINE POINT
✪	FLOODPLAIN REFERENCE MARK
S. BL:	SURVEY BASELINE — — —

IDS Engineering Group
13430 NW. Freeway
Suite 700
Houston, Tx. 77040
713.462.3178
TxEng Firm 2726
TxSurv Firm 10110700

KUO & ASSOCIATES
ENGINEERING + SURVEYING
10300 Westoffice Dr., Suite 800, Houston, Texas 77042
Tel: 713-975-8769, Fax: 713-975-0920, www.kuoassociates.com
TBPELS Firm Registration No. F-4578
TBPELS Firm Registration No. 1007560

SURVEYED BY:
KUO & ASSOCIATES, LLC.
FB NO. P-6413

THIS DOCUMENT IS RELEASED FOR THE PURPOSE OF INTERIM REVIEW UNDER THE AUTHORITY OF

KUTUBUL A. M. MAINUDDIN, R.P.L.S.
TEXAS REG. NO.: 6404

ON 05/06/2026
IT IS NOT TO BE USED FOR PERMIT, BIDDING OR CONSTRUCTION PURPOSES

CITY OF HOUSTON
HOUSTON PUBLIC WORKS

COH LS REHABILITATION AND RECONSTRUCTION WOODFOREST BOULEVARD LS

SURVEY CONTROL MAP

WBS NUMBER	FOR CITY OF HOUSTON USE ONLY
R-000267-0179-3	
DRAWING SCALE	
1"=100'	
CITY OF HOUSTON PM	

DWG. NO.	
G-11	SHEET NO. 11 OF 361

PLOTTED: 5/13/2026 6:21 PM

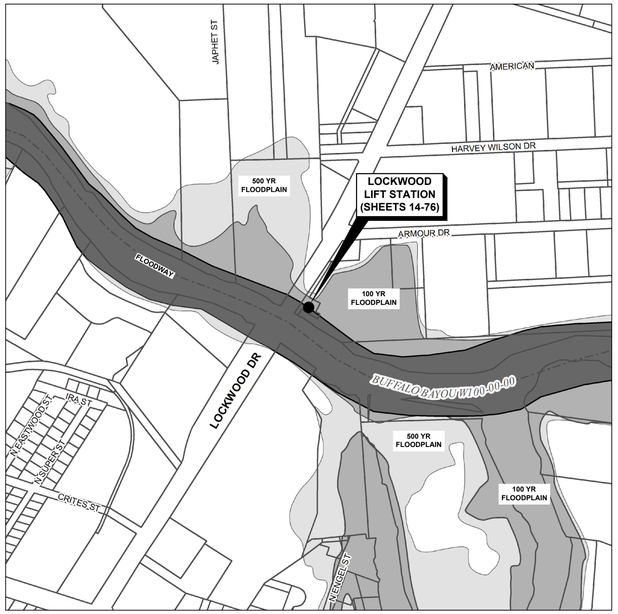

LOCKWOOD LIFT STATION
5400 ARMOUR DRIVE
KEY MAP No. 494Q
COUNCIL DISTRICT: H



SOUTH POINT LIFT STATION
10385 GULF PALMS STREET
KEY MAP No. 576Q
COUNCIL DISTRICT: E

LEGEND:

- 500 YR FLOODPLAIN
- 100 YR FLOODPLAIN
- FLOODWAY

N / W / E / S

NO.	DATE	REVISION	APP.

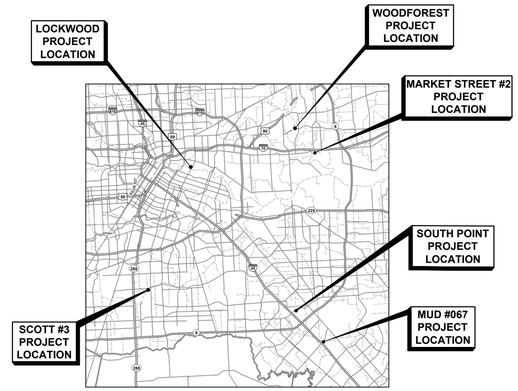

PROJECT LOCATION MAP

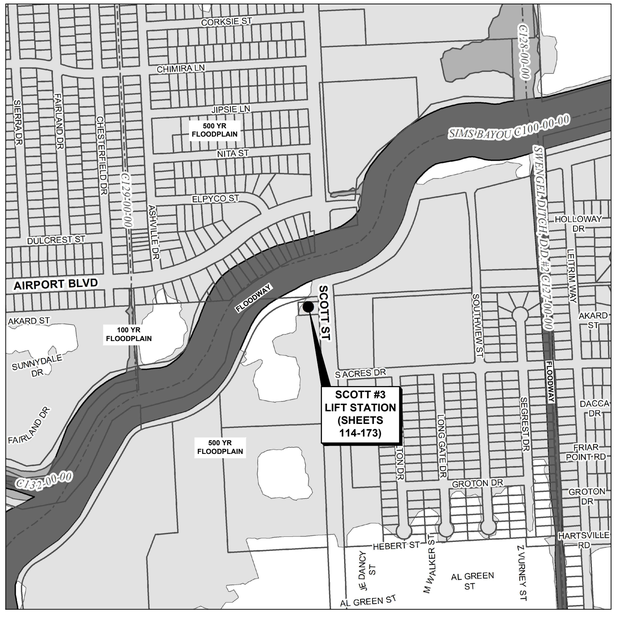

SCOTT #3 LIFT STATION
10718 1/2 SCOTT STREET
KEY MAP No. 573G
COUNCIL DISTRICT: D

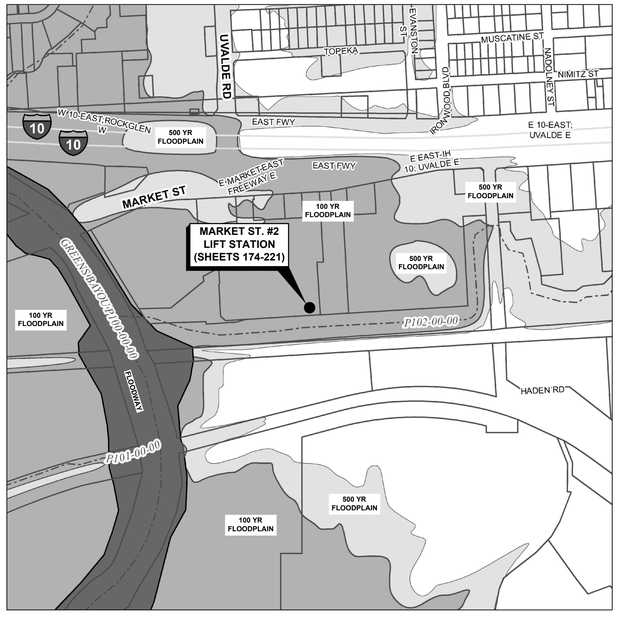

MARKET STREET #2 LIFT STATION
13400 MARKET STREET
KEY MAP No. 497K
COUNCIL DISTRICT: E

IDS Engineering Group
13430 NW. Freeway, Suite 700
Houston, Tx. 77040
713.462.3178
TxEng Firm 2726 | TxSurv Firm 10110700

THIS DOCUMENT IS RELEASED FOR THE PURPOSE OF REVIEW UNDER THE AUTHORITY OF MARCEL KHOUW, P.E. 101807 ON 05/27/2026. IT IS NOT TO BE USED FOR CONSTRUCTION PURPOSES.

SURVEYED BY: KUO & ASSOCIATES, INC.
TBPE FIRM #F-4578; TBPLS FIRM #1007560

CITY OF HOUSTON
HOUSTON PUBLIC WORKS

LIFT STATION RENEWAL AND REPLACEMENT FY 2023

LIFT STATION VICINITY MAPS (SHEET 1 OF 2)

WBS NUMBER	FOR CITY OF HOUSTON USE ONLY
R-000267-0179-4	
DRAWING SCALE	
HORIZ: N.T.S. VERT: N/A	
CITY OF HOUSTON PM	
NAWARAJ PANTA, P.E.	
SHEET NO. 12 OF 361	

DWG. NO. G-12

FILE PATH: \\idseg.com\FS\Projects\0000\005708500 CoH Lift Stations - FY 2023\CAD\DWG\PRODUCTION\12-VICINITY MAPS.dwg

PLOTTED: 5/13/2026 6:21 PM

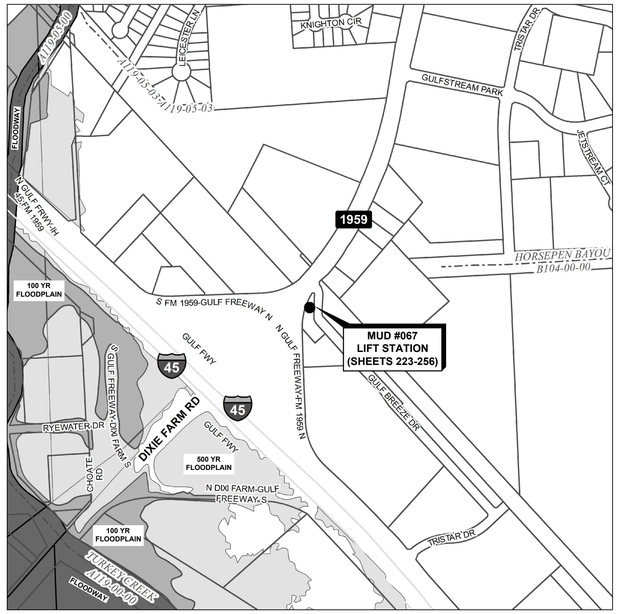

MUD #067
15503 GULF FREEWAY
KEY MAP No. 617B
COUNCIL DISTRICT: E

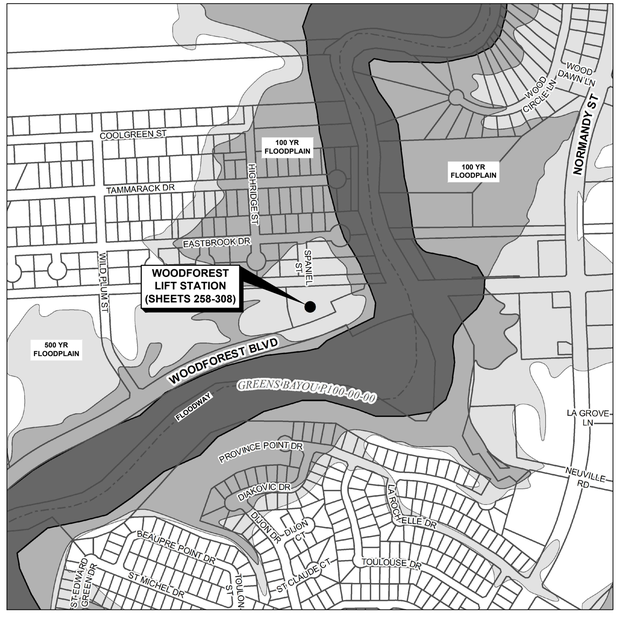

WOODFOREST LIFT STATION
12507 WOODFOREST BOULEVARD
KEY MAP NO. 496D
COUNCIL DISTRICT: I

LEGEND:

- 500 YR FLOODPLAIN
- 100 YR FLOODPLAIN
- FLOODWAY

N
W E
S

NO.	DATE	REVISION	APP.

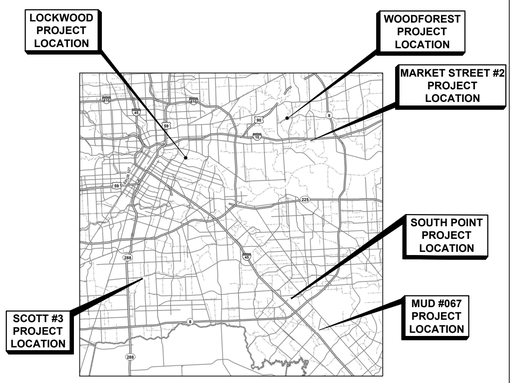

PROJECT LOCATION MAP

IDS Engineering Group
13430 NW. Freeway, Suite 700
Houston, Tx. 77040
713.462.3178
TxEng Firm 2726 | TxSurv Firm 10110700

SURVEYED BY: KUO & ASSOCIATES, INC.
TBPE FIRM #F-4578; TBPLS FIRM #1007560

THIS DOCUMENT IS RELEASED FOR THE PURPOSE OF REVIEW UNDER THE AUTHORITY OF MARCEL KHOUW, P.E. 101807 ON 05/27/2026. IT IS NOT TO BE USED FOR CONSTRUCTION PURPOSES.

CITY OF HOUSTON
HOUSTON PUBLIC WORKS

LIFT STATION RENEWAL AND REPLACEMENT FY 2023

LIFT STATION VICINITY MAPS (SHEET 2 OF 2)

WBS NUMBER	FOR CITY OF HOUSTON USE ONLY
R-000267-0179-4	
DRAWING SCALE	
HORIZ: N.T.S VERT: N/A	
CITY OF HOUSTON PM	
NAWARAJ PANTA, P.E.	
SHEET NO. 13 OF 361	

DWG. NO.
G-13

FILE PATH: \\idseg.com\FS\Projects\0000\005708500 CoH Lift Stations - FY 2023\CAD\DWG\PRODUCTION\13-VICINITY MAPS.dwg

PLOTTED: 5/13/2026 6:21 PM

FILE PATH: \\idseg.com\FS\Projects\0000\005708500 CoH Lift Stations - FY 2023\CAD\DWG\PRODUCTION\14-LOCKWOOD SITE ACCESS.dwg



60' 0' 60'
SCALE
1" = 60'

N E W S

NO.	DATE	REVISION	APP.

BENCHMARK:

CITY OF HOUSTON MONUMENT 5557-7409 IS AN ALUMINUM DISK ON TOP OF INLET LOCATED ON HICKORY CREEK DRIVE APPROXIMATELY 50 FEET EAST FROM THE INTERSECTION OF TRAILWOOD VILLAGE DRIVE.

ELEV. 40.68 FEET NAVD 1988, 2001 ADJUSTMENT (PROJECT DATUM)
ELEV. 32.88 FEET NAVD 1988, (GEOID '18)

* OBSERVED BY GPS SURVEYING AND PROCESSED IN REFERENCE TO THE CORS DATED OCTOBER 17, 2025

FLOODPLAIN:

AS PER FIRM PANEL 48201C0690N DATED JANUARY 6, 2017. THIS TRACT IS WITHIN THE FLOODWAY AND 100-YEAR FLOODPLAIN.
100-YR FLOODPLAIN ELEV. 20.00'
500-YR FLOODPLAIN ELEV. 25.00'
FIRM PANEL: 48201C0690N

EXISTING UTILITY NOTE:

EXISTING UNDERGROUND UTILITY INFORMATION (TYPE, SIZE & OWNERSHIP) ARE SHOWN APPROXIMATELY BASED ON THE AVAILABLE RECORD DRAWINGS AND FIELD VERIFICATION (WHERE FEASIBLE) WITHOUT PROBING AND EXCAVATION. NO WARRANTY IS MADE AS TO THE ACCURACY OR COMPLETENESS OF UTILITY LOCATION SHOWN ON THE DRAWING. CAUTION SHOULD BE EXERCISED WHEN EXCAVATING OR BORE AND JACKING IN THE VICINITY OF UNDERGROUND UTILITIES. OWNERS OF THE UTILITIES SHOULD BE NOTIFIED PRIOR TO SUCH ACTIVITIES. CALL UTILITY COORDINATING COMMITTEE AT 713-223-4567, AT LEAST 48 HOURS PRIOR TO EXCAVATING IN THE STREET RIGHT-OF-WAY.

NOTES:

1. LOCKWOOD LIFT STATION SITE IS ACCESSIBLE THROUGH AN ACCESS EASEMENT LOCATED OFF OF LOCKWOOD DRIVE (H.C.C.F. 147455).
2. CONTRACTOR TO MAINTAIN ACCESS TO ALL INDUSTRIAL/ COMMERCIAL DRIVEWAYS ALONG ACCESS ROUTE AT ALL TIMES.

IDS Engineering Group
13430 NW. Freeway, Suite 700
Houston, Tx. 77040
713.462.3178
TxEng Firm 2726 | TxSurv Firm 10110700

SURVEYED BY: KUO & ASSOCIATES, INC.
TBPE FIRM #F-4578; TBPLS FIRM #1007560

THIS DOCUMENT IS RELEASED FOR THE PURPOSE OF REVIEW UNDER THE AUTHORITY OF MARCEL KHOUW, P.E. 101807 ON 05/27/2026. IT IS NOT TO BE USED FOR CONSTRUCTION PURPOSES.

CITY OF HOUSTON
HOUSTON PUBLIC WORKS

LIFT STATION RENEWAL AND REPLACEMENT FY 2023

LOCKWOOD EXISTING SITE ACCESS AND CLEARING PLAN

WBS NUMBER	FOR CITY OF HOUSTON USE ONLY
R-000267-0179-4	
DRAWING SCALE	
HORIZ: 1"=60' VERT: N/A	
CITY OF HOUSTON PM	
NAWARAJ PANTA, P.E.	

DWG. NO.	SHEET NO. 14 OF 361
LCK-C-01	

PLOTTED: 5/13/2026 6:21 PM

FILE PATH: \\tdseg.com\FS\Projects\0000\005708500 CoH Lift Stations - FY 2023\CAD\DWG\PRODUCTION\15-LOCKWOOD SITE PLAN.dwg

LEGEND

- EXISTING CONCRETE PAVEMENT
- EXISTING CONCRETE SIDEWALK
- LIDAR CONTOUR DATED 2018

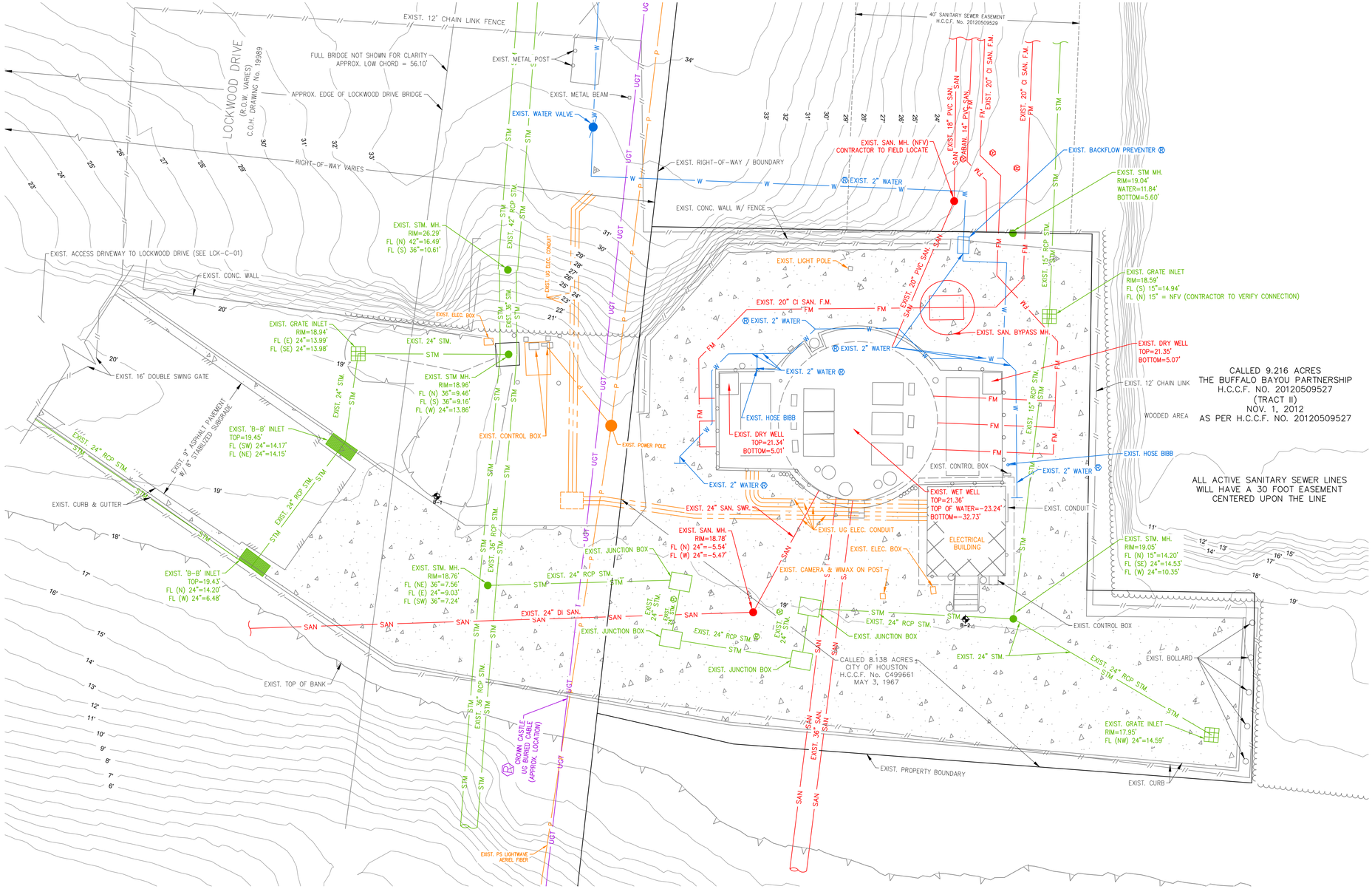

10' 0' 10'
SCALE
1"=10'

NO.	DATE	REVISION	APP.

BENCHMARK:

CITY OF HOUSTON MONUMENT 5557-7409 IS AN ALUMINUM DISK ON TOP OF INLET LOCATED ON HICKORY CREEK DRIVE APPROXIMATELY 50 FEET EAST FROM THE INTERSECTION OF TRAILWOOD VILLAGE DRIVE.

ELEV. 40.68 FEET NAVD 1988, 2001 ADJUSTMENT (PROJECT DATUM)
ELEV. 32.88 FEET NAVD 1988, (GEOID '18)

* OBSERVED BY GPS SURVEYING AND PROCESSED IN REFERENCE TO THE CORS DATED OCTOBER 17, 2025

FLOODPLAIN:

AS PER FIRM PANEL 48201C0690N DATED JANUARY 6, 2017. THIS TRACT IS WITHIN THE FLOODWAY AND 100-YEAR FLOODPLAIN.
100-YR FLOODPLAIN ELEV. 20.00'
500-YR FLOODPLAIN ELEV. 25.00'
FIRM PANEL: 48201C0690N

EXISTING UTILITY NOTE:

EXISTING UNDERGROUND UTILITY INFORMATION (TYPE, SIZE & OWNERSHIP) ARE SHOWN APPROXIMATELY BASED ON THE AVAILABLE RECORD DRAWINGS AND FIELD VERIFICATION (WHERE FEASIBLE) WITHOUT PROBING AND EXCAVATION. NO WARRANTY IS MADE AS TO THE ACCURACY OR COMPLETENESS OF UTILITY LOCATION SHOWN ON THE DRAWING. CAUTION SHOULD BE EXERCISED WHEN EXCAVATING OR BORE AND JACKING IN THE VICINITY OF UNDERGROUND UTILITIES. OWNERS OF THE UTILITIES SHOULD BE NOTIFIED PRIOR TO SUCH ACTIVITIES. CALL UTILITY COORDINATING COMMITTEE AT 713-223-4567, AT LEAST 48 HOURS PRIOR TO EXCAVATING IN THE STREET RIGHT-OF-WAY.

NOTICE:
FOR YOUR SAFETY, YOU ARE REQUIRED BY TEXAS LAW TO CALL 811 AT LEAST 48 HOURS BEFORE YOU DIG SO THAT UNDERGROUND LINES CAN BE MARKED. THIS SIGNATURE DOES NOT FULFILL YOUR OBLIGATION TO CALL 811

VERIFICATION OF PRIVATE UTILITY LINES

Date

CenterPoint Energy natural gas utilities shown. (Gas service lines are not shown). This signature not be used for conflict verification.

Signature valid for six months.

Date

CenterPoint Energy/UNDERGROUND Electrical Facilities Verification ONLY. (This signature verifies existing underground facilities - not to be used for conflict verification)

Signature valid for six months.

Date

Approved for AT&T underground conduit facilities only.
Signature valid for one year.

IDS Engineering Group
13430 NW. Freeway, Suite 700
Houston, Tx. 77040
713.462.3178
TxEng Firm 2726 | TxSurv Firm 10110700

THIS DOCUMENT IS RELEASED FOR THE PURPOSE OF REVIEW UNDER THE AUTHORITY OF MARCEL KHOUW, P.E. 101807 ON 05/27/2026. IT IS NOT TO BE USED FOR CONSTRUCTION PURPOSES.

SURVEYED BY: KUO & ASSOCIATES, INC.
TBPE FIRM #F-4578; TBPLS FIRM #1007560

CITY OF HOUSTON
HOUSTON PUBLIC WORKS

LIFT STATION RENEWAL AND REPLACEMENT FY 2023

LOCKWOOD LIFT STATION EXISTING SITE PLAN

WBS NUMBER	FOR CITY OF HOUSTON USE ONLY
R-000267-0179-4	
DRAWING SCALE	
HORIZ: 1" = 10' VERT: N/A	
CITY OF HOUSTON PM	
NAWARAJ PANTA, P.E.	
SHEET NO. 15 OF 361	

DWG. NO.
LCK-C-02

PLOTTED: 5/13/2026 6:21 PM

LEGEND

- EXISTING CONCRETE PAVEMENT
- REMOVE EXISTING CONCRETE PAVEMENT
- SITE DEMOLITION
- LIFT STATION PARTIAL DEMOLITION (SEE NOTE 1)
- ABANDON ANY UNDERGROUND UTILITY
- REMOVE ANY UNDERGROUND UTILITY
- REMOVE EXISTING FENCE
- FILTER FABRIC FENCE
- CTW — CONCRETE TRUCK WASHOUT
  * CONTRACTOR TOO PLACE CTW AS NECESSARY WITHIN COH PROPERTY OR EASEMENTS AS APPROVED BY PROJECT MANAGER
- I.P.B.-II — INLET PROTECTION BARRIER

NOTES:

1. EXISTING LIFT STATION WET WELL TO REMAIN.
2. SEE ELECTRICAL PLANS ON DWG. NO.'S LCK-E-01 THROUGH LCK-I-16 FOR ELECTRICAL IMPROVEMENTS.
3. CONTRACTOR SHALL COORDINATE WITH CENTERPOINT ENERGY TO DE-ENERGIZE THE LIFT STATION AND OTHER ELECTRICAL EQUIPMENT ON SITE.
4. CONTRACTOR SHALL PROTECT THE EXISTING CONDUIT AND CABLE. IF CABLE OR CONDUIT IS DAMAGED CONTRACTOR SHALL REPLACE AT NO ADDITIONAL COST TO THE CITY.
5. REMOVE THE EXISTING FORCE MAIN TO THE NEAREST PIPE JOINT AND TIE PROP FORCE MAIN TO EXIST. USE RESTRAINED JOINTS.
6. THE EXISTING FORCE MAIN IS ASSUMED TO BE CAST IRON BELL AND SPIGOT AND SHALL BE FIELD VERIFIED BY THE CONTRACTOR.
7. CONTRACTOR TO COORDINATE WITH BUFFALO BAYOU PARTNERSHIP FOR ACCESS TO SANITARY SEWER EASEMENT. CONTACT XXXX XXXX AT XXX-XXX-XXXX.
8. THE CITY OF HOUSTON WILL RETAIN SALVAGE RIGHTS TO ALL MATERIAL AND EQUIPMENT. ALL MATERIALS AND EQUIPMENT RETAINED BY THE CITY OF HOUSTON SHALL BE DELIVERED TO A POINT DESIGNATED BY CITY OF HOUSTON REPRESENTATIVE (MR. ARTURO CARRILLO 832-395-3558). ANY MATERIAL OR EQUIPMENT NOT RETAINED BY THE CITY OF HOUSTON SHALL BE REMOVED FROM THE SITE AND DISPOSED OF BY THE CONTRACTOR IN ACCORDANCE WITH APPLICABLE REGULATIONS.
9. THE SOUND PRODUCED BY THE ERECTION, EXCAVATION, CONSTRUCTION, OR DEMOLITION OF ANY BUILDING OR STRUCTURE, INCLUDING THE USE OF ANY NECESSARY TOOLS OR EQUIPMENT, CONDUCTED BETWEEN THE HOURS OF 7 A.M. AND 8 P.M., SHALL NOT PRODUCE A SOUND EXCEEDING 85 DB(A) WHEN MEASURED FROM THE PROPERTY LINE OF THE RESIDENTIAL PROPERTY WHERE THE SOUND IS BEING RECEIVED.
10. CONTRACTOR TO SAW-CUT, REMOVE, AND REPLACE CONCRETE AS NECESSARY. NO SEPARATE PAY.
11. FOR REQUIRED STORMWATER POLLUTION PREVENTION PLAN MEASURES ON PROPOSED INLETS SEE DRAINAGE PLAN.

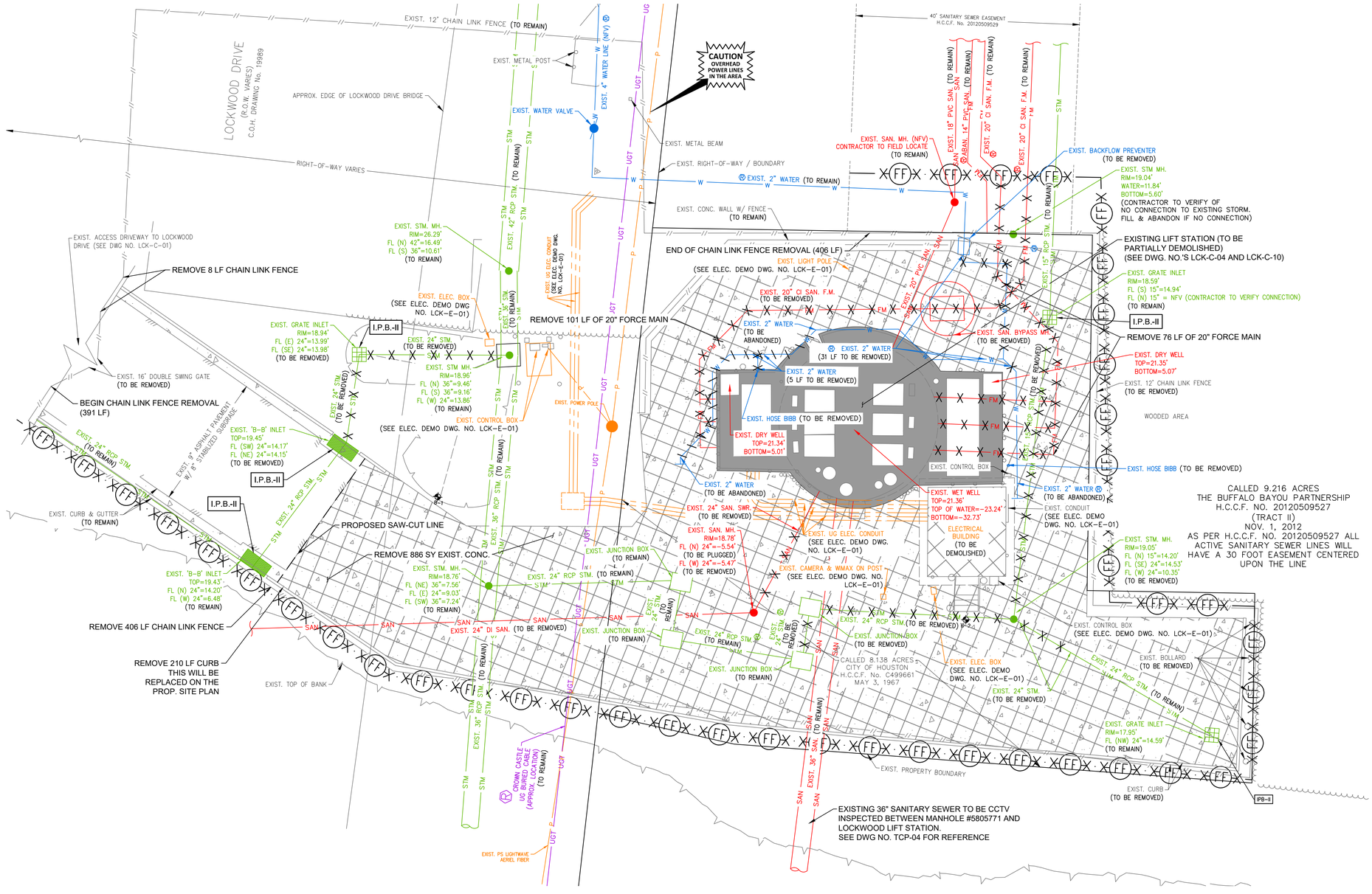

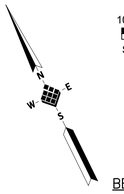

10' 0' 10'
SCALE
1"=10'

BENCHMARK:

CITY OF HOUSTON MONUMENT 5557-7409 IS AN ALUMINUM DISK ON TOP OF INLET LOCATED ON HICKORY CREEK DRIVE APPROXIMATELY 50 FEET EAST FROM THE INTERSECTION OF TRAILWOOD VILLAGE DRIVE.

ELEV. 40.68 FEET NAVD 1988, 2001 ADJUSTMENT (PROJECT DATUM)
ELEV. 32.88 FEET NAVD 1988, (GEOID '18)

* OBSERVED BY GPS SURVEYING AND PROCESSED IN REFERENCE TO THE CORS DATED OCTOBER 17, 2025

FLOODPLAIN:

AS PER FIRM PANEL 48201C0690N DATED JANUARY 6, 2017. THIS TRACT IS WITHIN THE FLOODWAY AND 100-YEAR FLOODPLAIN.
100-YR FLOODPLAIN ELEV. 20.00'
500-YR FLOODPLAIN ELEV. 25.00'
FIRM PANEL: 48201C0690N

EXISTING UTILITY NOTE:

EXISTING UNDERGROUND UTILITY INFORMATION (TYPE, SIZE & OWNERSHIP) ARE SHOWN APPROXIMATELY BASED ON THE AVAILABLE RECORD DRAWINGS AND FIELD VERIFICATION (WHERE FEASIBLE) WITHOUT PROBING AND EXCAVATION. NO WARRANTY IS MADE AS TO THE ACCURACY OR COMPLETENESS OF UTILITY LOCATION SHOWN ON THE DRAWING. CAUTION SHOULD BE EXERCISED WHEN EXCAVATING OR BORE AND JACKING IN THE VICINITY OF UNDERGROUND UTILITIES. OWNERS OF THE UTILITIES SHOULD BE NOTIFIED PRIOR TO SUCH ACTIVITIES. CALL UTILITY COORDINATING COMMITTEE AT 713-223-4567, AT LEAST 48 HOURS PRIOR TO EXCAVATING IN THE STREET RIGHT-OF-WAY.

NOTICE:
FOR YOUR SAFETY, YOU ARE REQUIRED BY TEXAS LAW TO CALL 811 AT LEAST 48 HOURS BEFORE YOU DIG SO THAT UNDERGROUND LINES CAN BE MARKED. THIS SIGNATURE DOES NOT FULFILL YOUR OBLIGATION TO CALL 811

VERIFICATION OF PRIVATE UTILITY LINES

Date

CenterPoint Energy natural gas utilities shown. (Gas service lines are not shown). This signature not be used for conflict verification.

Signature valid for six months.

Date

CenterPoint Energy/UNDERGROUND Electrical Facilities Verification ONLY. (This signature verifies existing underground facilities – not to be used for conflict verification)

Signature valid for six months.

Date

Approved for AT&T underground conduit facilities only.
Signature valid for one year.

NO.	DATE	REVISION	APP.

IDS Engineering Group
13430 NW. Freeway, Suite 700
Houston, Tx. 77040
713.462.3178
TxEng Firm 2726 | TxSurv Firm 10110700

SURVEYED BY: KUO & ASSOCIATES, INC.
TBPE FIRM #F-4578; TBPLS FIRM #1007560

THIS DOCUMENT IS RELEASED FOR THE PURPOSE OF REVIEW UNDER THE AUTHORITY OF MARCEL KHOUW, P.E. 101807 ON 05/27/2026. IT IS NOT TO BE USED FOR CONSTRUCTION PURPOSES.

CITY OF HOUSTON
HOUSTON PUBLIC WORKS

LIFT STATION RENEWAL AND REPLACEMENT FY 2023

LOCKWOOD LIFT STATION SITE DEMOLITION PLAN AND SWPPP

WBS NUMBER	FOR CITY OF HOUSTON USE ONLY
R-000267-0179-4	
DRAWING SCALE	
HORIZ: 1" = 10' VERT: N/A	
CITY OF HOUSTON PM	
NAWARAJ PANTA, P.E.	
DWG. NO. LCK-C-03	SHEET NO. 16 OF 361

FILE PATH: \\idseg.com\FS\Projects\0000\005708500 CoH Lift Stations - FY 2023\CAD\DWG\PRODUCTION\16-LOCKWOOD SITE PLAN AND DEMO.dwg

PLOTTED: 5/13/2026 6:21 PM

LIFT STATION DEMOLITION AND ABANDONMENT NOTES:

1. THIS DRAWING IS A REPRODUCTION OF THE EXISTING LIFT STATION CONSTRUCTION DRAWINGS AND INTENDED TO PROVIDE GENERAL INFORMATION FOR STATION DEMOLITION. THE CONTRACTOR IS RESPONSIBLE FOR DETERMINING THE ACTUAL WORK REQUIRED FOR DEMOLITION AND REMOVAL OF STRUCTURAL, MECHANICAL, AND ELECTRICAL COMPONENTS. A CLAIM FOR CHANGED CONDITIONS BETWEEN THE EXISTING CONDITIONS AND THE RECORD DRAWINGS WILL NOT BE CONSIDERED.
2. NO DEMOLITION IS TO BE PERFORMED UNTIL BYPASS PUMPING HAS BEEN INSTALLED AND OPERATIONAL.
3. THE CITY OF HOUSTON WILL RETAIN SALVAGE RIGHTS TO ALL MATERIAL AND EQUIPMENT. ALL MATERIALS AND EQUIPMENT RETAINED BY THE CITY OF HOUSTON SHALL BE DELIVERED TO A POINT DESIGNATED BY CITY OF HOUSTON REPRESENTATIVE (MR. ARTURO CARRILLO 832-395-3558). ANY MATERIAL OR EQUIPMENT NOT RETAINED BY THE CITY OF HOUSTON SHALL BE REMOVED FROM THE SITE AND DISPOSED OF BY THE CONTRACTOR IN ACCORDANCE WITH APPLICABLE REGULATIONS.
4. WHEN REMOVING EXISTING PUMPS, CONTRACTOR SHALL LEAVE AS MUCH WIRE/CABLE AS POSSIBLE IN ORDER FOR THE CITY TO REUSE THE PUMPS.
5. CONTRACTOR SHALL NOTIFY TEXAS DEPARTMENT OF HEALTH (DEPARTMENT) ON A FORM SPECIFIED BY THE DEPARTMENT OF ANY ASBESTOS ABATEMENT ACTIVITY, RENOVATION OR OPERATIONS AND MAINTENANCE ACTIVITY AFFECTING ASBESTOS-CONTAINING BUILDING MATERIALS, OR ANY DEMOLITION IN FACILITIES OR PUBLIC BUILDINGS.
6. CONCRETE SLAB AND WALLS INDICATED ON THIS PLAN SHALL BE REMOVED TO 5 FEET BELOW FINISHED GRADE AS PER SPECIFICATION SECTION 02220.
7. ALL REMAINING WALL OPENINGS IN THE VALVE VAULT SHALL BE SEALED WITH NON-SHRINK GROUT.
8. CONTRACTOR SHALL BACKFILL THE ABANDONED AND DEMOLISHED VALVE VAULT. BACKFILL SHALL BE SUITABLE FILL AND FLOWABLE FILL AS SHOWN AND COMPACTED PROPERLY UP TO THE PROPOSED CONCRETE DISCHARGE ASSEMBLY PAD.
9. THE CONTRACTOR SHALL COORDINATE WITH CENTERPOINT ENERGY TO TEMPORARILY DISCONNECT ELECTRICAL POWER AS NEEDED.
10. THE EXISTING WET WELL SHALL BE CLEANED OF ALL DEBRIS, WASTEWATER AND OTHER RESIDUES BY AN APPROVED CITY OF HOUSTON DISPOSAL CONTRACTOR.
11. THE CONTRACTOR SHALL DISPOSE OF ANY LIQUID OR SOLID WASTE FOUND IN THE WET WELL AT A DISPOSAL FACILITY LICENSED AND APPROVED BY THE STATE OF TEXAS. THE CONTRACTOR SHALL BE RESPONSIBLE FOR THE COST OF TRANSPORTATION, DISPOSAL AND TESTING REQUIRED BY STATE AND FEDERAL REGULATORY AGENCIES, AND BY THE DISPOSAL FACILITY.
12. PRIOR TO THE CLEAN-OUT AND CLEANING OF THE EXISTING LIFT STATION WET WELL, CONTRACTOR TO SUBMIT PROOF TO C.O.H. CONSTRUCTION PM THAT TRANSPORTER/HAULER TO BE USED FOR THE TRANSPORT OF THE CONTENTS OF THE WET WELL (I.E., SOLIDS, GRIT, SEWAGE SLUDGE, AND DOMESTIC SLUDGE, ETC.) IS REGISTERED BY THE TEXAS COMMISSION ON ENVIRONMENTAL QUALITY (TCEQ) AS A SLUDGE TRANSPORTER AND THE TRANSPORTER'S REGISTRATION IS CURRENT AND VALID DURING THE PERIOD OF PERFORMANCE.
13. CONTRACTOR SHALL SUBMIT PROOF OF SUBMISSION OF REQUIRED ASBESTOS/DEMOLITION NOTIFICATION FORM TO THE TEXAS DEPARTMENT OF STATE HEALTH SERVICES TO C.O.H. CONSTRUCTION PM. THE NOTIFICATION TO THE STATE MUST BE PROVIDED A MINIMUM OF 10 DAYS PRIOR TO THE STARTUP OF ANY DEMOLITION ACTIVITIES AT THE SITE.
14. CONTRACTOR SHALL OBTAIN CITY OF HOUSTON DEMOLITION PERMIT (SEE FORM CE 1075 REV. 01/01/2015 FOR GUIDELINES) OR SUBMIT PROOF OF NON-APPLICABILITY TO C.O.H. CONSTRUCTION PROJECT MANAGER PRIOR TO THE STARTUP OF DEMOLITION ACTIVITIES AT THE SITE. THE CONTRACTOR SHALL OBTAIN ANY STATE DEMOLITION PERMITS REQUIRED.

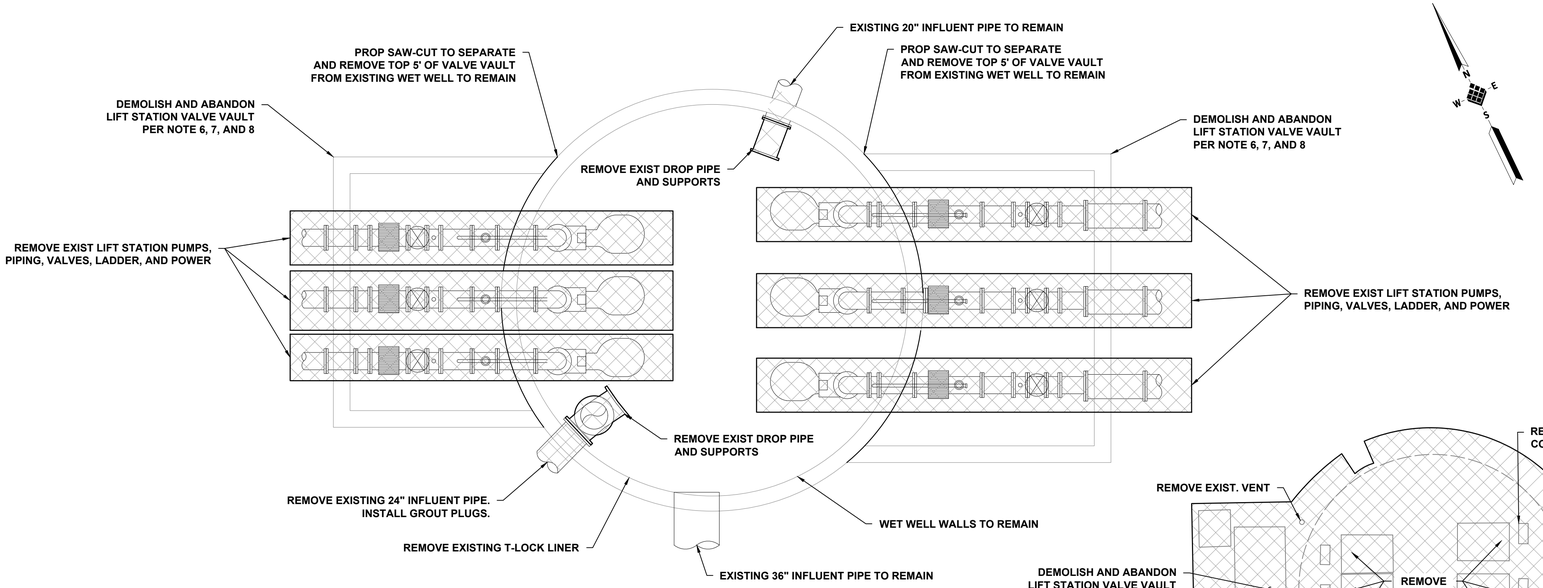

LIFT STATION PLAN

SCALE: N.T.S.

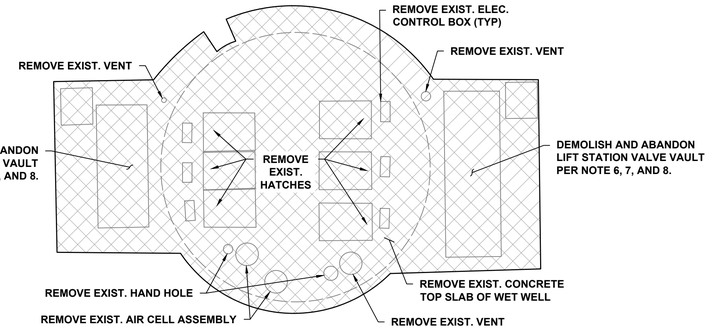

PLAN AT GRADE

SCALE: N.T.S.

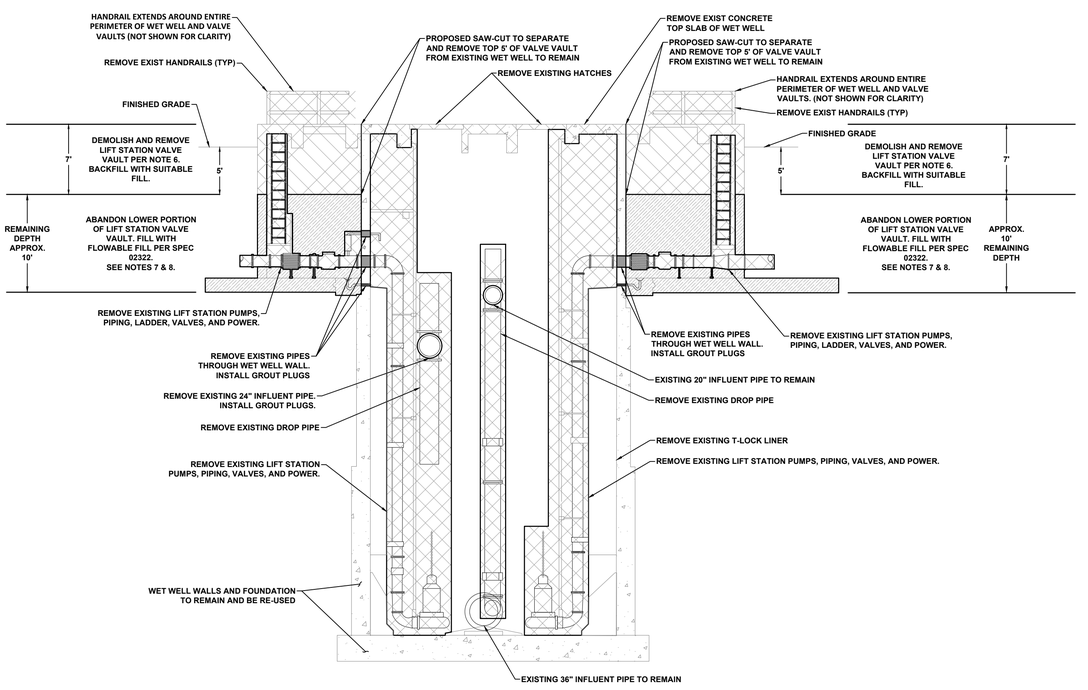

LIFT STATION SECTION

SCALE: N.T.S.

LEGEND

DEMOLITION AREA

ABANDON VALVE VAULT

NO.	DATE	REVISION	APP.

IDS Engineering Group
13430 NW. Freeway, Suite 700
Houston, Tx. 77040
713.462.3178
TxEng Firm 2726 | TxSurv Firm 10110700

SURVEYED BY: KUO & ASSOCIATES, INC.
TBPE FIRM #F-4578; TBPLS FIRM #1007560

THIS DOCUMENT IS RELEASED FOR THE PURPOSE OF REVIEW UNDER THE AUTHORITY OF MARCEL KHOUW, P.E. 101807 ON 05/27/2026. IT IS NOT TO BE USED FOR CONSTRUCTION PURPOSES.

CITY OF HOUSTON
HOUSTON PUBLIC WORKS

LIFT STATION RENEWAL AND REPLACEMENT FY 2023

LOCKWOOD LIFT STATION SECTION DEMOLITION

WBS NUMBER	FOR CITY OF HOUSTON USE ONLY
R-000267-0179-4	
DRAWING SCALE	
HORIZ: AS NOTED VERT: N/A	
CITY OF HOUSTON PM	
NAWARAJ PANTA, P.E.	
SHEET NO. 17 OF 361	

DWG. NO. LCK-C-04

FILE PATH: \\tdseg.com\FS\Projects\0000\005708500 CoH Lift Stations - FY 2023\CAD\DWG\PRODUCTION\17-LOCKWOOD SECTION DEMO.dwg

PLOTTED: 5/14/2026 3:32 PM

NOTES:

1. EXISTING LIFT STATION WET WELL TO REMAIN.
2. SEE ELECTRICAL PLANS ON DRAWINGS LCK-E-01 THROUGH LCK-I-16 FOR ELECTRICAL IMPROVEMENTS.
3. CONTRACTOR SHALL COORDINATE WITH CENTERPOINT ENERGY TO DE-ENERGIZE THE LIFT STATION AND OTHER ELECTRICAL EQUIPMENT ON SITE.
4. SANITARY SEWER MANHOLES INSTALLED BELOW THE FLOODPLAIN ELEVATION SHALL HAVE WATERTIGHT MANHOLE FRAMES AND COVERS AS PER SPECIFICATION 02090.
5. CONTRACTOR SHALL FIELD VERIFY THE LOCATION OF THE HOLES DRILLED FOR THE RISER PIPE INSTALLATION THRU THE WET VAULT TOP SLAB.
6. REMOVE THE EXISTING FORCE MAIN TO THE NEAREST PIPE JOINT AND TIE PROP FORCE MAIN TO EXIST. USE RESTRAINED JOINTS.
7. THE EXISTING FORCE MAIN IS ASSUMED TO BE DUCTILE IRON BELL AND SPIGOT AND SHALL BE FIELD VERIFIED BY THE CONTRACTOR.
8. YARD LIGHT POLES, ELECTRICAL & COMMUNICATION POLES, AND SERVICE POLES SHALL BE ABLE TO WITHSTAND ULTIMATE DESIGN WIND SPEED OF 130 MPH, V(ULT).
9. REMOVE EXISTING T-LOCK LINER, REPAIR MANHOLE WALL AND RESTORE BENCH PER SPEC 02555, REPLACE MANHOLE FRAME, RING, AND COVER, AND RECOAT WITH A COH APPROVED MATERIAL PER SPEC 09901.
10. SPECIAL RIGGING AND/OR EQUIPMENT MAY BE REQUIRED FOR SETTING PROPOSED GENERATOR ON PROPOSED PLATFORM BENEATH LOCKWOOD DRIVE BRIDGE. APPROX. ELEVATION OF THE LOW CHORD OF THE BRIDGE IS 56.10' PER RD #45601R, THIS SHALL BE INCIDENTAL TO ASSOCIATED BID ITEMS.
11. CONTRACTOR TO SAW-CUT, REMOVE, AND REPLACE CONCRETE AS NECESSARY. NO SEPARATE PAY.
12. SAW-CUT AND REMOVE CONCRETE PAVEMENT AND INSTALL FOUNDATION AS SHOWN ON STRUCTURAL DWG. NO.'S LCK-S-08 AND LCK-S-09.

PROPOSED POINT TABLE

POINT	NORTHING	EASTING	DESCRIPTION	ELEVATION
1	13842779.58	3136498.27	PROP. 45° BEND	6.17'
2	13842780.85	3136501.90	PROP. 45° BEND	6.17'
3	13842781.85	3136552.41	TIE-IN-ELEV. (NFV)	+/- 10.87'
4	13842781.44	3136555.13	TIE-IN-ELEV. (NFV)	+/- 6.17'
5	13842764.57	3136536.01	PROP. 45° BEND	+/- 10.87'
6	13842764.25	3136547.10	PROP. 45° BEND	+/- 6.17'
7	13842765.77	3136546.65	PROP. 45° BEND	+/- 6.17'

LEGEND

- EXISTING CONCRETE PAVEMENT
- PROP. 7" THICK CONCRETE PAVEMENT W/6" CEMENT STABILIZED SAND SUBGRADE
- EXISTING CONCRETE SIDEWALK
- PROP. 4.5" THICK CONCRETE SIDEWALK
- DETAIL NO. / SHEET NO.

10' 0' 10'
SCALE
1"=10'

BENCHMARK:

CITY OF HOUSTON MONUMENT 5557-7409 IS AN ALUMINUM DISK ON TOP OF INLET LOCATED ON HICKORY CREEK DRIVE APPROXIMATELY 50 FEET EAST FROM THE INTERSECTION OF TRAILWOOD VILLAGE DRIVE.

ELEV. 40.68 FEET NAVD 1988, 2001 ADJUSTMENT (PROJECT DATUM)
ELEV. 32.88 FEET NAVD 1988, (GEOID '18)

* OBSERVED BY GPS SURVEYING AND PROCESSED IN REFERENCE TO THE CORS DATED OCTOBER 17, 2025

FLOODPLAIN NOTE:

AS PER FIRM PANEL 48201C0690N DATED JANUARY 6, 2017. THIS TRACT IS WITHIN THE FLOODWAY AND 100-YEAR FLOODPLAIN.
100-YR FLOODPLAIN ELEV. 20.00'
500-YR FLOODPLAIN ELEV. 25.00'
FIRM PANEL: 48201C0690N

T.B.M #25:

SET "X" CUT IN CONC. LOCATED ON THE WEST SIDE OF GULF PALMS STREET APPROX. 630 FT SOUTH FROM THE INTERSECTION OF FUQUA STREET ELEV.= 36.67 FT.

EXISTING UTILITY NOTE:

EXISTING UNDERGROUND UTILITY INFORMATION (TYPE, SIZE & OWNERSHIP) ARE SHOWN APPROXIMATELY BASED ON THE AVAILABLE RECORD DRAWINGS AND FIELD VERIFICATION (WHERE FEASIBLE) WITHOUT PROBING AND EXCAVATION. NO WARRANTY IS MADE AS TO THE ACCURACY OR COMPLETENESS OF UTILITY LOCATION SHOWN ON THE DRAWING. CAUTION SHOULD BE EXERCISED WHEN EXCAVATING OR BORE AND JACKING IN THE VICINITY OF UNDERGROUND UTILITIES. OWNERS OF THE UTILITIES SHOULD BE NOTIFIED PRIOR TO SUCH ACTIVITIES. CALL UTILITY COORDINATING COMMITTEE AT 713-223-4567, AT LEAST 48 HOURS PRIOR TO EXCAVATING IN THE STREET RIGHT-OF-WAY.

NO.	DATE	REVISION	APP.

NOTICE:
FOR YOUR SAFETY, YOU ARE REQUIRED BY TEXAS LAW TO CALL 811 AT LEAST 48 HOURS BEFORE YOU DIG SO THAT UNDERGROUND LINES CAN BE MARKED. THIS SIGNATURE DOES NOT FULFILL YOUR OBLIGATION TO CALL 811

VERIFICATION OF PRIVATE UTILITY LINES

Date

CenterPoint Energy natural gas utilities shown. (Gas service lines are not shown). This signature not be used for conflict verification.

Signature valid for six months.

Date

CenterPoint Energy/UNDERGROUND Electrical Facilities Verification ONLY. (This signature verifies existing underground facilities - not to be used for conflict verification)

Signature valid for six months.

Date

Approved for AT&T underground conduit facilities only.
Signature valid for one year.

IDS Engineering Group
13430 NW. Freeway, Suite 700
Houston, Tx. 77040
713.462.3178
TxEng Firm 2726 | TxSurv Firm 10110700

SURVEYED BY: KUO & ASSOCIATES, INC.
TBPE FIRM #F-4578; TBPLS FIRM #1007560

THIS DOCUMENT IS RELEASED FOR THE PURPOSE OF REVIEW UNDER THE AUTHORITY OF MARCEL KHOUW, P.E. 101807 ON 05/27/2026. IT IS NOT TO BE USED FOR CONSTRUCTION PURPOSES.

CITY OF HOUSTON
HOUSTON PUBLIC WORKS

LIFT STATION RENEWAL AND REPLACEMENT FY 2023

LOCKWOOD LIFT STATION PROPOSED SITE PLAN

WBS NUMBER	FOR CITY OF HOUSTON USE ONLY
R-000267-0179-4	
DRAWING SCALE	
HORIZ: 1" = 10' VERT: N/A	
CITY OF HOUSTON PM	
NAWARAJ PANTA, P.E.	
SHEET NO. 18 OF 361	

DWG. NO. LCK-C-05

FILE PATH: \\idseg.com\FS\Projects\0000\005708500 CoH Lift Stations - FY 2023\CAD\DWG\PRODUCTION\18-LOCKWOOD PROP SITE PLAN.dwg

PLOTTED: 5/13/2026 6:21 PM

LEGEND

EXISTING CONCRETE PAVEMENT

PROP. 7" THICK CONCRETE PAVEMENT W/6" CEMENT STABILIZED SAND SUBGRADE

I.P.B.-I — INLET PROTECTION BARRIER–STAGE I

I.P.B.-II — INLET PROTECTION BARRIER–STAGE II

ON-SITE SHEET FLOW DIRECTION

OFFSITE SHEET FLOW DIRECTION (SEE NOTE 3)

DETAIL NO. / DRAWING NO.

SAW-CUT CONCRETE

DRAINAGE AREA BOUNDARY

XX — DRAINAGE AREA NO.
XX.X — ACRES
XX.X — 2-YR FLOW (CFS)
XX.X — 100-YR FLOW (CFS)

NOTES:

1. OFFSITE FLOW IS UNAFFECTED BY THE PROPOSED LIFT STATION STRUCTURE AND CONCRETE PAVING.
2. DRAINAGE AREA EXTENDS BEYOND THE LIMITS OF THIS SHEET.
3. CONTRACTOR TO SAW-CUT, REMOVE, AND REPLACE CONCRETE AS NECESSARY. NO SEPARATE PAY.
4. SAW-CUT AND REMOVE CONCRETE PAVEMENT AND INSTALL FOUNDATION AS SHOWN ON STRUCTURAL DWG. NO.'S LCK-S-07 AND LCK-S-08.
5. CONTRACTOR TO PROVIDE EXPANSION JOINT BETWEEN PROPOSED END OF RETAINING WALL AND EXISTING RETAINING WALL.

PROPOSED POINT TABLE

POINT	NORTHING	EASTING	DESCRIPTION	ELEVATION
1	13842833.11	3136405.33	PROP. CONCRETE DRIVEWAY	20.08'
2	13842799.81	3136459.13	PROP. TOP OF PAVEMENT	19.33'
3	13842800.64	3136459.69	PROP. TOP OF RETAINING WALL	23.00'
4	13842784.23	3136484.53	PROP. TOP OF RETAINING WALL (SEE NOTE 7)	23.00'
5	13842783.34	3136484.11	PROP. TOP OF PAVEMENT	19.63'
6	13842756.10	3136472.08	PROP. TOP OF PAVEMENT/MEG	18.98'
7	13842754.31	3136468.34	PROP. TOP OF PAVEMENT/MEG	18.91'
8	13842767.45	3136441.77	PROP. TOP OF PAVEMENT/MEG	18.91'
9	13842815.46	3136421.04	PROP. TOP OF PAVEMENT	19.35'
10	13842791.86	3136446.75	PROP. TOP OF PAVEMENT	18.70'
11	13842736.02	3136515.27	PROP. TOP OF PAVEMENT	M.P.G.
12	13842726.62	3136532.92	PROP. TOP OF PAVEMENT	M.P.G.
13	13842714.26	3136526.34	PROP. TOP OF PAVEMENT	M.P.G.
14	13842723.67	3136508.69	PROP. TOP OF PAVEMENT	M.P.G.
15	13842756.27	3136494.27	PROP. TOP OF PAVEMENT	19.03'
16	13842776.28	3136494.08	PROP. TOP OF PAVEMENT	19.03'
17	13842750.88	3136542.52	PROP. TOP OF PAVEMENT	19.28'
18	13842731.90	3136532.40	PROP. TOP OF PAVEMENT	19.28'
19	13842738.95	3136507.22	PROP. STAIRS	DWG. NO. C-01
22	13842740.18	3136504.71	PROP. STAIRS	DWG. NO. C-01
23	13842724.61	3136493.31	PROP. SAN. SWR. MH.	M.P.G.

PROPOSED POINT TABLE

POINT	NORTHING	EASTING	DESCRIPTION	ELEVATION
28	13842778.23	3136507.47	PROP. FORCE MAIN MH.	M.E.G.
29	13842771.04	3136534.08	PROP. SAN. SWR. MH.	M.E.G.
30	13842759.26	3136544.44	PROP. FORCE MAIN MH.	M.E.G.
44	13842785.08	3136428.56	PROP. TOP OF PAVEMENT/ M.E.G.	18.80'
45	13842779.81	3136418.92	PROP. TOP OF PAVEMENT/ M.E.G.	19.18'
46	13842774.43	3136405.52	PROP. TOP OF CURB	19.37'
47	13842750.96	3136419.74	PROP. TOP OF PAVEMENT	18.75'
48	13842750.62	3136419.36	PROP. TOP OF CURB	18.92'
49	13842715.20	3136468.58	PROP. TOP OF PAVEMENT	18.32'
50	13842714.79	3136468.29	PROP. TOP OF CURB	18.52'
51	13842667.97	3136546.30	PROP. TOP OF PAVEMENT	17.80'
52	13842667.27	3136546.48	PROP. TOP OF CURB	18.35'
53	13842694.50	3136560.73	PROP. TOP OF PAVEMENT	18.34'
54	13842707.55	3136536.55	PROP. TOP OF PAVEMENT	19.15'
55	13842764.90	3136565.19	PROP. TOP OF PAVEMENT/ M.E.G.	19.30'
56	13842775.24	3136542.17	PROP. TOP OF CURB	19.94'
57	13842790.53	3136505.40	PROP. TOP OF CURB	19.54'
58	13842782.61	3136486.00	PROP. TOP OF PAVEMENT	M.E.G.
59	13842770.98	3136480.12	PROP. TOP OF CURB	19.02'
60	13842766.43	3136489.09	PROP. TOP OF PAVEMENT	19.03'
61	13842742.70	3136536.16	PROP. TOP OF PAVEMENT	19.28'
62	13842755.04	3136551.85	ADJUST TO GRADE	18.59'
73	13842818.60	3136379.26	PROP. TOP OF PAVEMENT/ M.E.G.	±20.84'
74	13842749.58	3136418.17	PROP. TOP OF PAVEMENT/ M.E.G.	±19.61'
75	13842713.82	3136467.03	PROP. TOP OF PAVEMENT/ M.E.G.	±19.82'
76	13842665.19	3136547.05	PROP. TOP OF PAVEMENT/ M.E.G.	±18.41'
77	13842694.08	3136562.88	PROP. TOP OF PAVEMENT/ M.E.G.	±18.34'
78	13842694.28	3136561.18	PROP. TOP OF PAVEMENT	±18.84'
79	13842774.98	3136545.74	PROP. TOP OF PAVEMENT/ M.E.G.	±19.70'

PROPOSED POINT TABLE

POINT	NORTHING	EASTING	DESCRIPTION
20	13842735.68	3136508.10	PROP. BOLLARD
21	13842739.05	3136501.48	PROP. BOLLARD
24	13842755.54	3136483.64	PROP. BOLLARD
25	13842757.94	3136483.18	PROP. BOLLARD
26	13842777.80	3136494.41	PROP. BOLLARD
27	13842775.41	3136499.13	PROP. BOLLARD
31	13842754.48	3136538.96	PROP. BOLLARD
32	13842752.00	3136543.63	PROP. BOLLARD
33	13842706.73	3136523.97	PROP. BOLLARD
34	13842705.44	3136521.64	PROP. BOLLARD
35	13842707.31	3136518.13	PROP. BOLLARD
36	13842709.18	3136514.62	PROP. BOLLARD
37	13842710.87	3136511.45	PROP. BOLLARD
38	13842712.77	3136507.87	PROP. BOLLARD
39	13842721.49	3136506.40	PROP. BOLLARD
40	13842752.36	3136490.15	PROP. BOLLARD
41	13842727.23	3136509.45	PROP. BOLLARD
42	13842749.18	3136496.65	PROP. BOLLARD
43	13842732.96	3136512.51	PROP. BOLLARD

PROPOSED POINT TABLE

POINT	NORTHING	EASTING	DESCRIPTION
63	13842714.60	3136485.25	PROP. BOLLARD
64	13842718.14	3136480.16	PROP. BOLLARD
65	13842753.75	3136425.97	PROP. BOLLARD
66	13842757.28	3136420.87	PROP. BOLLARD
67	13842816.84	3136420.92	PROP. BOLLARD
68	13842813.69	3136425.69	PROP. BOLLARD
69	13842788.41	3136470.45	PROP. BOLLARD
70	13842787.80	3136472.55	PROP. BOLLARD
71	13842781.91	3136480.49	PROP. BOLLARD
72	13842781.30	3136482.59	PROP. BOLLARD
80	13842794.16	3136456.60	PROP. BOLLARD
81	13842789.15	3136453.30	PROP. BOLLARD
82	13842784.15	3136449.99	PROP. BOLLARD
83	13842781.22	3136447.70	PROP. BOLLARD
84	13842785.41	3136440.82	PROP. BOLLARD
85	13842789.46	3136434.68	PROP. BOLLARD
86	13842797.94	3136425.92	PROP. BOLLARD
87	13842802.76	3136423.94	PROP. BOLLARD
88	13842807.77	3136427.24	PROP. BOLLARD
89	13842812.78	3136430.55	PROP. BOLLARD

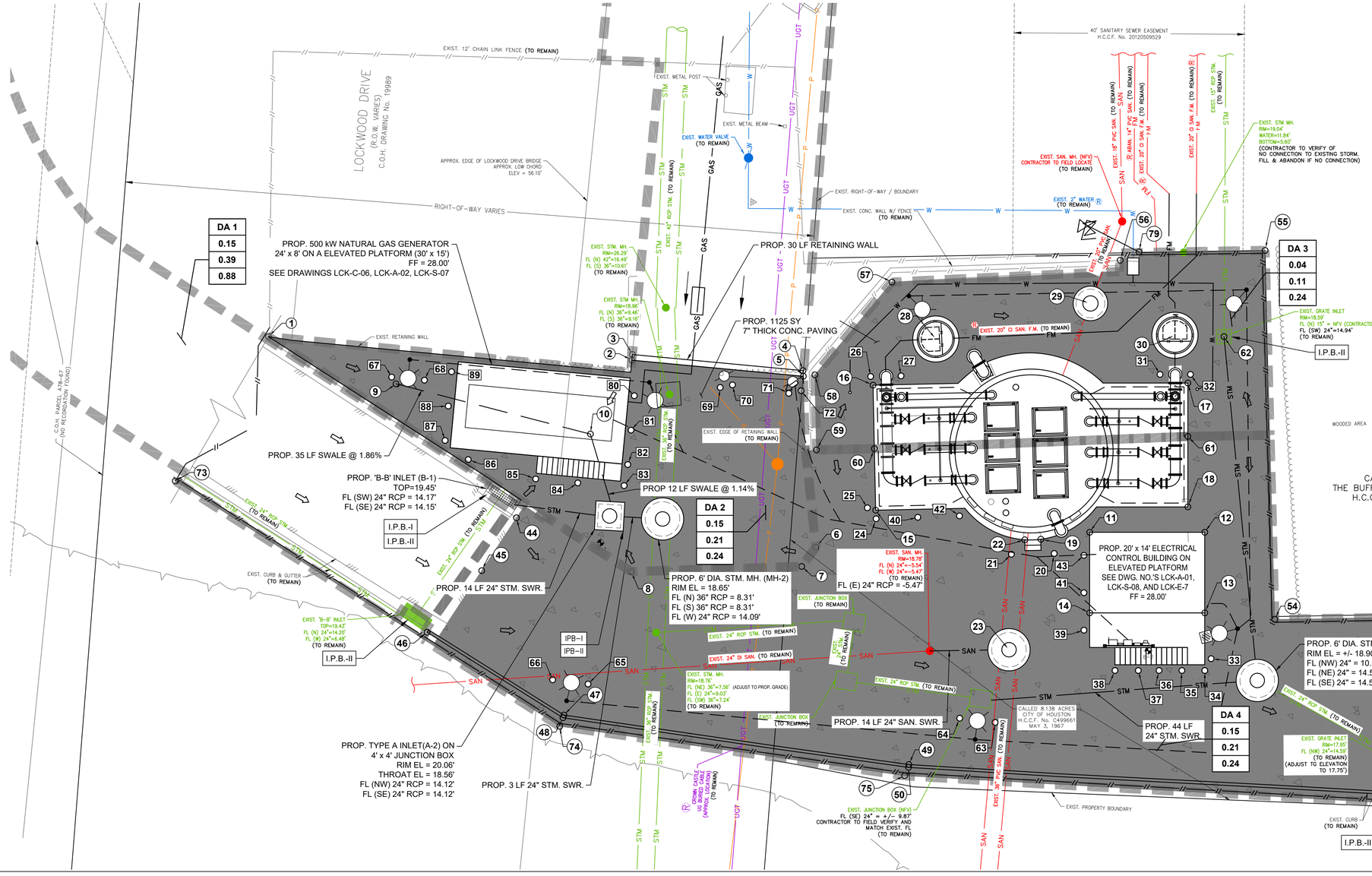
LOCKWOOD DRIVE
(R.O.W. VARIES)
C.O.H. DRAWING No. 19989
EXIST. 12' CHAIN LINK FENCE (TO REMAIN)
EXIST. METAL POST
EXIST. METAL BEAM
EXIST. WATER VALVE (TO REMAIN)
APPROX. EDGE OF LOCKWOOD DRIVE BRIDGE
APPROX. LOW CHORD
ELEV = 56.10'
RIGHT-OF-WAY VARIES
EXIST. RIGHT-OF-WAY / BOUNDARY
EXIST. CONC. WALL W/ FENCE (TO REMAIN)
40' SANITARY SEWER EASEMENT
H.C.C.F. No. 20120509529
EXIST. 18" PVC SAN. (TO REMAIN)
EXIST. 14" PVC SAN. (TO REMAIN)
EXIST. 20" O SAN. F.M. (TO REMAIN)
EXIST. 15" RCP STM. (TO REMAIN)
EXIST. SAN. MH. (NFV) CONTRACTOR TO FIELD LOCATE (TO REMAIN)
EXIST. 2" WATER (TO REMAIN)
EXIST. STM MH. RIM=19.04' WATER=11.84' BOTTOM=5.60' (CONTRACTOR TO VERIFY OF NO CONNECTION TO EXISTING STORM. FILL & ABANDON IF NO CONNECTION)
PROP. 500 kW NATURAL GAS GENERATOR
24' x 8' ON A ELEVATED PLATFORM (30' x 15')
FF = 28.00'
SEE DRAWINGS LCK-C-06, LCK-A-02, LCK-S-07
PROP. 30 LF RETAINING WALL
PROP. 1125 SY
7" THICK CONC. PAVING
EXIST. STM MH. RIM=26.29' FL (N) 42"=16.49' FL (S) 36"=10.61' (TO REMAIN)
EXIST. STM MH. RIM=18.96' FL (N) 36"=9.46' FL (S) 36"=9.16' (TO REMAIN)
EXIST. RETAINING WALL
EXIST. EDGE OF RETAINING WALL (TO REMAIN)
EXIST. 20" CI SAN. F.M. (TO REMAIN)
EXIST. GRATE INLET RIM=18.59' FL (N) 15" = NFV (CONTRACTOR TO VERIFY CONNECTION) FL (SW) 24"=14.94' (TO REMAIN)
I.P.B.-II
WOODED AREA
C.O.H. PARCEL A-PA-47 (NO RECORDABLE FOUND)
PROP. 35 LF SWALE @ 1.86%
PROP. 'B-B' INLET (B-1) TOP=19.45' FL (SW) 24" RCP = 14.17' FL (SE) 24" RCP = 14.15'
PROP 12 LF SWALE @ 1.14%
I.P.B.-I
I.P.B.-II
EXIST. 24" RCP STM. (TO REMAIN)
EXIST. CURB & GUTTER (TO REMAIN)
PROP. 14 LF 24" STM. SWR.
PROP. 6' DIA. STM. MH. (MH-2) RIM EL = 18.65' FL (N) 36" RCP = 8.31' FL (S) 36" RCP = 8.31' FL (W) 24" RCP = 14.09'
EXIST. SAN. MH. RIM=18.78' FL (N) 24"=-5.54' FL (W) 24"=-5.47' (TO REMAIN)
FL (E) 24" RCP = -5.47'
EXIST. JUNCTION BOX (TO REMAIN)
EXIST. 24" RCP STM. (TO REMAIN)
EXIST. 24" DI SAN. (TO REMAIN)
EXIST. STM. MH. RIM=18.76' FL (NE) 36"=7.56' (ADJUST TO PROP. GRADE) FL (E) 24"=9.03' FL (SW) 36"=7.24' (TO REMAIN)
EXIST. 36" RCP STM. (TO REMAIN)
PROP. 14 LF 24" SAN. SWR.
PROP. 3 LF 24" STM. SWR.
PROP. TYPE A INLET(A-2) ON 4' x 4' JUNCTION BOX RIM EL = 20.06' THROAT EL = 18.56' FL (NW) 24" RCP = 14.12' FL (SE) 24" RCP = 14.12'
EXIST. JUNCTION BOX (NFV) FL (SE) 24" = +/- 9.87' CONTRACTOR TO FIELD VERIFY AND MATCH EXIST. FL (TO REMAIN)
EXIST. PROPERTY BOUNDARY
CALLED 8.138 ACRES CITY OF HOUSTON H.C.C.F. No. C491661 MAY 3, 1967
CALLED 9.216 ACRES THE BUFFALO BAYOU PARTNERSHIP H.C.C.F. NO. 20120509527 (TRACT II) NOV. 1, 2012
PROP. 20' x 14' ELECTRICAL CONTROL BUILDING ON ELEVATED PLATFORM SEE DWG. NO.'S LCK-A-01, LCK-S-08, AND LCK-E-7 FF = 28.00'
PROP. 6' DIA. STM. MH. (MH-4) RIM EL = +/- 18.90' (MEG) FL (NW) 24" = 10.35' FL (NE) 24" = 14.57' FL (SE) 24" = 14.57'
PROP. 44 LF 24" STM. SWR.
EXIST. GRATE INLET RIM=17.95' FL (NW) 24"=14.59' (TO REMAIN) (ADJUST TO ELEVATION TO 17.75')
EXIST. CURB (TO REMAIN)
EXIST. 24" RCP STM. (TO REMAIN)
EXIST. 36" PVC SAN. (TO REMAIN)
EXIST. 24" RCP STM. (TO REMAIN)
EXIST. 36" RCP STM. (TO REMAIN)
EXIST. 24" RCP STM. (TO REMAIN)
EXIST. 24" RCP STM. (TO REMAIN)
EXIST. 24

PLOTTED: 5/13/2026 6:21 PM

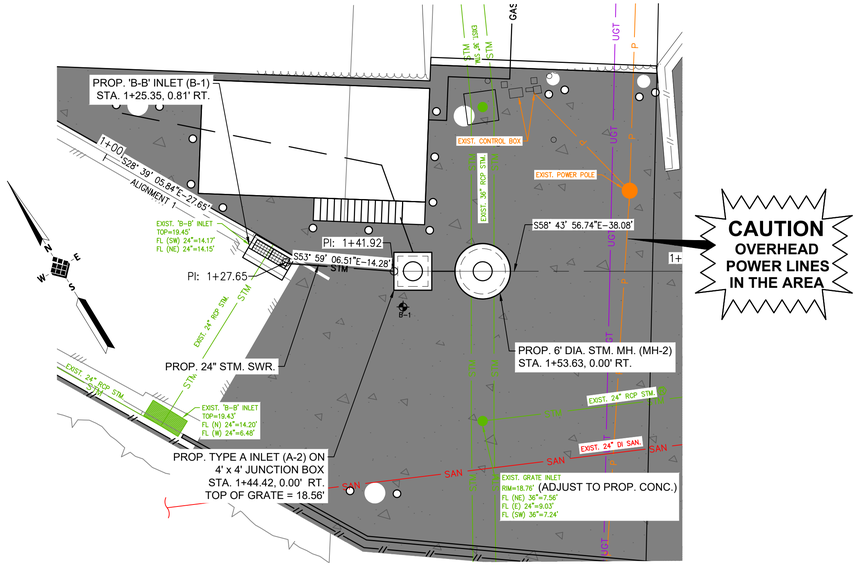

CAUTION
OVERHEAD POWER LINES IN THE AREA

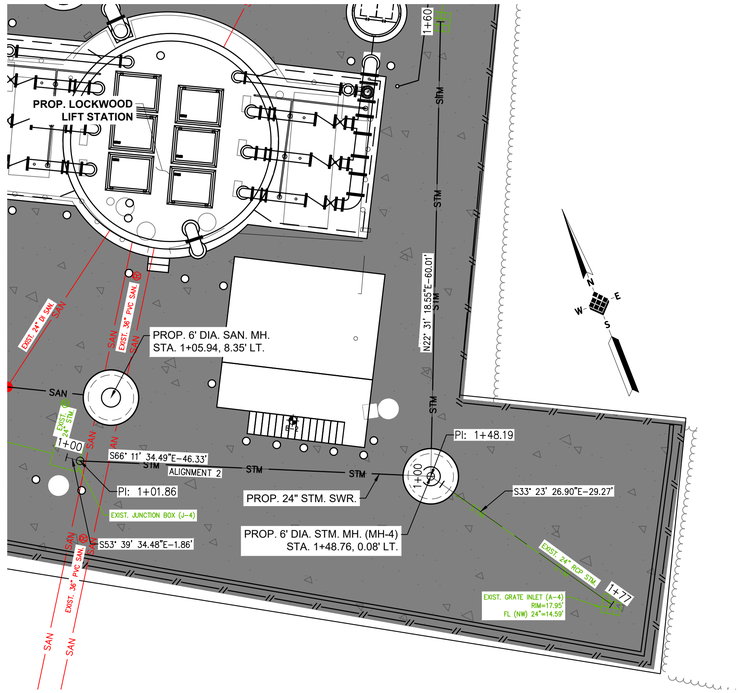

10' 0' 10'
SCALE
H: 1" = 10'
V: 1" = 2'

NO.	DATE	REVISION	APP.

STORM SEWER PROFILE INLET B–1 TO MH–2

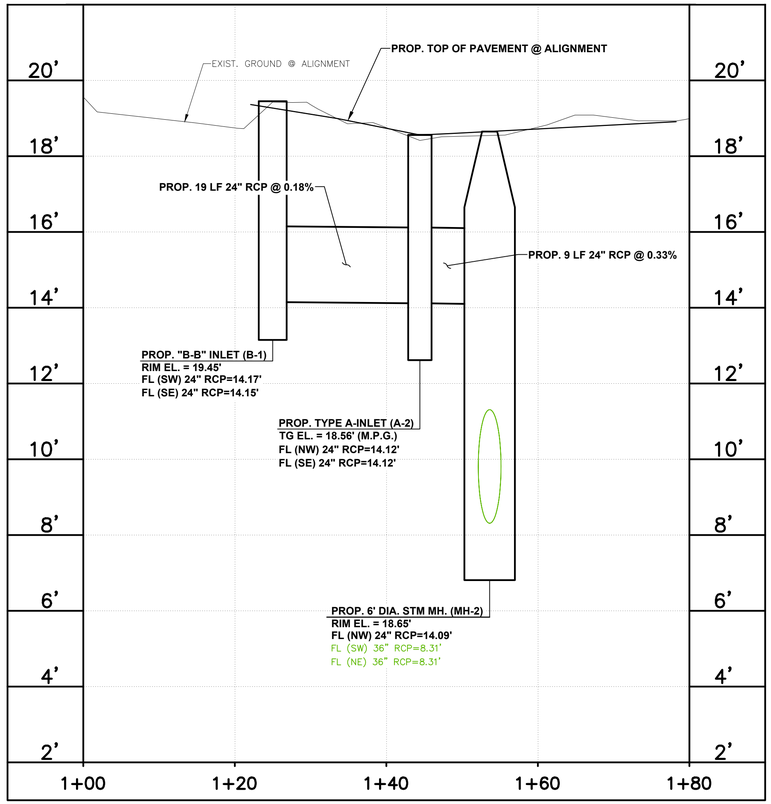

STORM SEWER PROFILE INLET J–4 TO MH–4

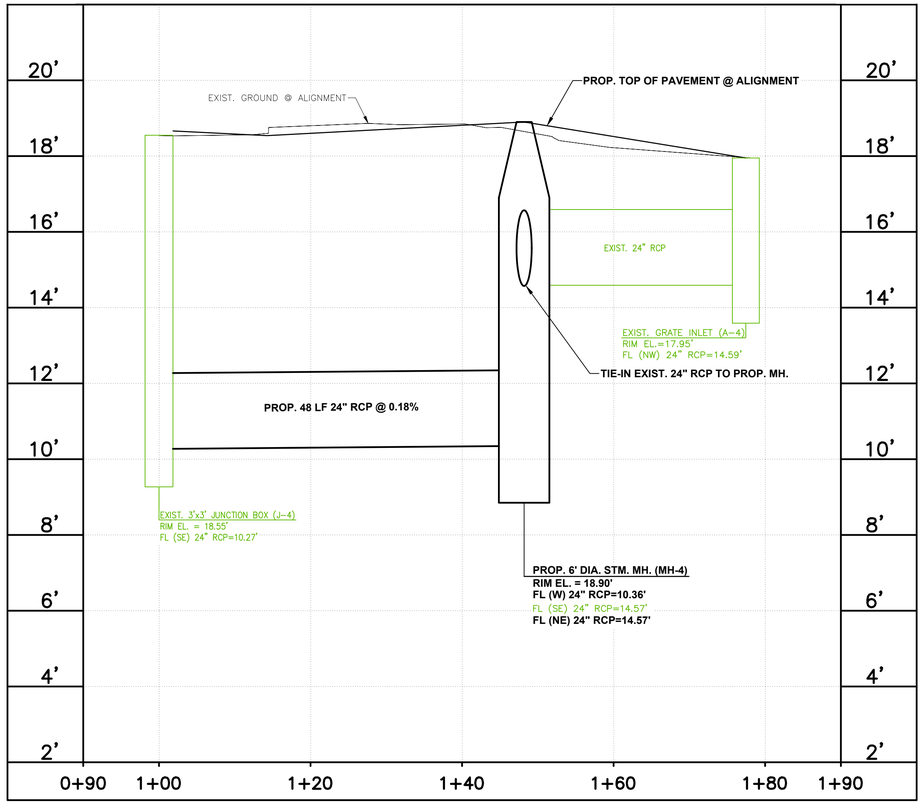

IDS Engineering Group
13430 NW. Freeway, Suite 700
Houston, Tx. 77040
713.462.3178
TxEng Firm 2726 | TxSurv Firm 10110700

SURVEYED BY: KUO & ASSOCIATES, INC.
TBPE FIRM #F-4578; TBPLS FIRM #1007560

THIS DOCUMENT IS RELEASED FOR THE PURPOSE OF REVIEW UNDER THE AUTHORITY OF MARCEL KHOUW, P.E. 101807 ON 05/27/2026. IT IS NOT TO BE USED FOR CONSTRUCTION PURPOSES.

CITY OF HOUSTON
HOUSTON PUBLIC WORKS

LIFT STATION RENEWAL AND REPLACEMENT FY 2023

LOCKWOOD LIFT STATION PLAN AND PROFILE (SHEET 1 OF 2)

WBS NUMBER	FOR CITY OF HOUSTON USE ONLY
R-000267-0179-4	
DRAWING SCALE	
HORIZ: 1" = 10' VERT: 1" = 2'	
CITY OF HOUSTON PM	
NAWARAJ PANTA, P.E.	
DWG. NO. LCK-C-07	SHEET NO. 20 OF 361

FILE PATH: \\idseg.com\FS\Projects\0000\005708500 CoH Lift Stations - FY 2023\CAD\DWG\PRODUCTION\20-LOCKWOOD PLAN AND PROFILE.dwg

PLOTTED: 5/13/2026 6:21 PM

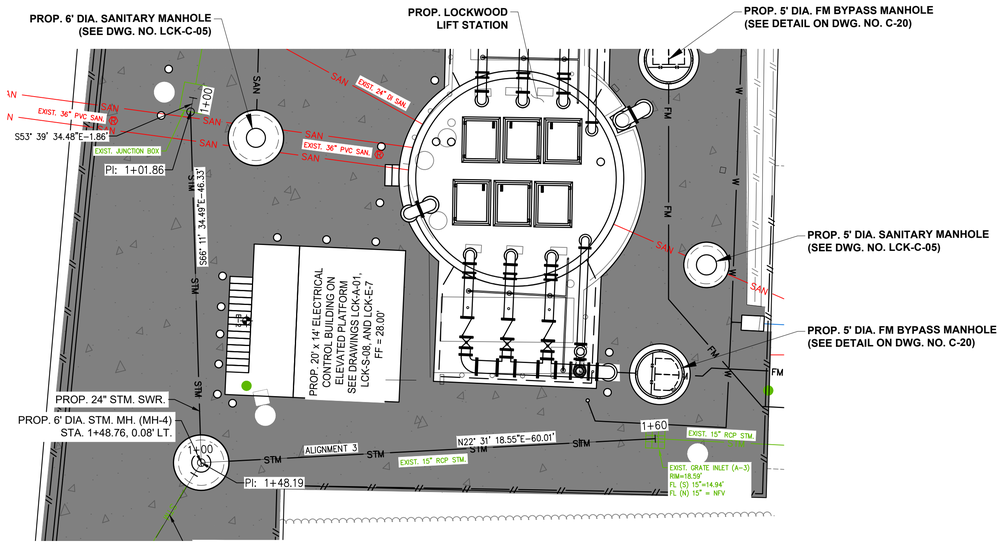

10' 0' 10'
SCALE
H: 1" = 10'
V: 1" = 2'

NO.	DATE	REVISION	APP.

STORM SEWER PROFILE MH–4 TO INLET A–4

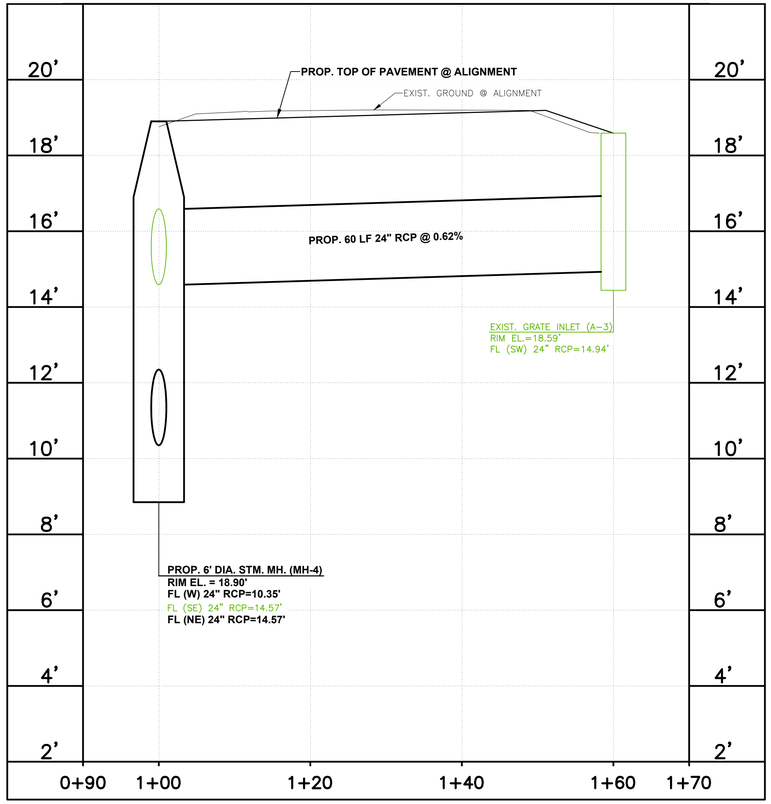

IDS Engineering Group
13430 NW. Freeway, Suite 700
Houston, Tx. 77040
713.462.3178
TxEng Firm 2726 | TxSurv Firm 10110700

SURVEYED BY: KUO & ASSOCIATES, INC.
TBPE FIRM #F-4578; TBPLS FIRM #1007560

THIS DOCUMENT IS RELEASED FOR THE PURPOSE OF REVIEW UNDER THE AUTHORITY OF MARCEL KHOUW, P.E. 101807 ON 05/27/2026. IT IS NOT TO BE USED FOR CONSTRUCTION PURPOSES.

CITY OF HOUSTON
HOUSTON PUBLIC WORKS

LIFT STATION RENEWAL AND REPLACEMENT FY 2023

LOCKWOOD LIFT STATION PLAN AND PROFILE (SHEET 2 OF 2)

WBS NUMBER	FOR CITY OF HOUSTON USE ONLY
R-000267-0179-4	
DRAWING SCALE	
HORIZ: 1" = 10' VERT: 1" = 2'	
CITY OF HOUSTON PM	
NAWARAJ PANTA, P.E.	
SHEET NO. 21 OF 361	

DWG. NO.
LCK-C-07

FILE PATH: \\idseg.com\FS\Projects\0000\005708500 CoH Lift Stations - FY 2023\CAD\DWG\PRODUCTION\21-LOCKWOOD PLAN AND PROFILE.dwg

PLOTTED: 5/13/2026 6:21 PM

STORM SEWER CALCULATIONS

IDS ENGINEERING GROUP

CLIENT NAME: **CITY OF HOUSTON**
PROJECT NAME: **WBS NO. R-000267-0179-3 - LOCKWOOD LIFT STATION**
IDS JOB NO: **0057-085-00**
DATE PRINTED: May 11, 2026
DATE REVISED: May 11, 2026 BY: CM

SELECT STORM EVENT FREQUENCY: 2 year
SELECT APPROPRIATE LAND USE: Light Industrial
ENTER DESIGN CURB HEIGHT (inches): 0

Re-Generate Formulas

Line	Manhole or Inlet Number U / S	Manhole or Inlet Number D / S	Reach Length (feet)	Diameter or Rise (inches)	Span (inches)	No. of Barrels	Pipe Material	Pipe Grade Minimum (%)	Pipe Grade Actual (%)	Area (acres)	Sum of Area (acres)	Runoff Coeff.	Sum of C x Area (acres)	Travel Time (minutes)	Time of Concentration (minutes)	Intensity (in./hr.)	Sum of Flows (cfs)	Design Flow (cfs)	Design Velocity (fps)	Actual Velocity (fps)	Hydraulic Gradient (%)	Change in Head (feet)	Upstream Top of Grate (feet)	Hydraulic Grade Upstream (feet)	Hydraulic Grade Downstream (feet)	Manhole Drop (D/S) (feet)	Pipe Flowline Upstream (feet)	Pipe Flowline Downstream (feet)	Depth from Gutter to HGL (feet)	Depth of Cover (feet)	Upstream NG Elev. (feet)	Depth from NG to HGL (feet)
1	B-1	A-2	14.00	24		1	RCP	0.180%	0.180%	0.15	0.15	0.65	0.10	1.88	22.2	4.00	0.39	9.60	3.06	0.12	0.000%	0.00	19.45	16.12	16.12	0.00	14.15	14.12	3.33	3.30	19.45	3.33
2	A-2	***MH-2/OUT***	3.00	24		1	RCP	0.180%	1.000%	0.26	0.41	0.65	0.27	0.15	24.0	3.83	1.02	22.62	7.20	0.32	0.002%	0.00	18.56	16.09	16.09	0.00	***14.12***	***14.09***	2.47	2.44	18.56	2.47
3	A-3	MH-4	58.00	24		1	RCP	0.180%	0.638%	0.04	0.04	0.65	0.03	28.21	20.7	4.14	0.11	18.07	5.75	0.03	0.000%	0.00	18.59	16.57	16.57	0.00	***14.94***	***14.57***	2.02	1.65	18.59	2.02
4	MH-4	***J-4/OUT***	44.00	24		1	RCP	0.180%	1.114%	0.15	0.19	0.65	0.12	7.30	48.9	2.55	0.32	23.87	7.60	0.10	0.000%	0.00	19.11	11.87	11.87	0.00	***10.36***	***9.87***	7.24	6.75	19.11	7.24

NOTES:
1. This spreadsheet has been developed using the City of Houston criteria outlined in the November 2023 Infrastructure Design Manual. The Rational Method has been used to calculate flows, and Manning's Formula for pipes flowing full has been used to calculate velocities.
2. This spreadsheet calculates rainfall intensity using the b, d, and e constants for Harris County and the City of Houston, as outlined in Appendix H of the Harris County Infrastructure Regulations, and Chapter 9 of the November 2023 City of Houston Infrastructure Design Manual.
3. Minimum storm sewer grades and maximum velocities as established in the City of Houston design criteria have been used to establish the grades used in this system.
4. Land Use "SFR" represents Single-Family Residential development. Land Use "MFR" represents Multi-Family Residential development.
5. Design flow and velocity are based entirely on pipe grade and represent the condition when pipe is flowing full with the hydraulic grade line equal to the pipe grade, and are used to demonstrate that the pipe slopes used in the calculations conform to the City of Houston minimum and maximum standards.

Runoff Coefficient Table	
Land Use	C
SFR (> ½ ac. lots)	0.35
SFR (¼ - ½ ac. lots)	0.45
SFR (< ¼ ac. lots)	0.55
MFR (< 20 d.u./ac.)	0.65
MFR (>= 20 d.u./ac.)	0.80
Business Districts	0.80
Light Industrial	0.65
Heavy Industrial	0.75
Railroad Yard Areas	0.30
Parks/Open Areas	0.18
Land Use Varies	ENTER

Pipe Material	Mannings "n" Value	Pipe Description
CLAY	0.012	Extra Strength Vitrified Clay Pipe
CMP	0.024	Corrugated Metal Pipe
CMPSI	0.013	CMP w/ Smooth Interior
HDPE	0.013	High Density Polyethylene Pipe
PVC	0.013	Polyvinyl Chloride Pipe
RCA	0.013	Reinforced Concrete Arch Pipe
RCB	0.015	Reinforced Concrete Box Culvert
RCE	0.013	Reinforced Concrete Elliptical Pipe
RCP	0.013	Reinforced Concrete Pipe

Rainfall Freq. (yrs)	b	d	e
2 year	***48.35***	***9.07***	***0.7244***
5 year	52.32	7.88	0.6900
10 year	54.68	6.96	0.6623
25 year	57.79	5.89	0.6294
50 year	61.00	5.46	0.6096
100 year	60.66	4.44	0.5797
500 year	62.17	2.95	0.5196

Master Spreadsheet - Storm Sewer Calculations Updated 02/10/2025
\\idseg.com\FS\Projects\0000\005708500 CoH Lift Stations - FY 2023\Eng\Calcs\Drainage\[1. Lockwood Drainage Calcs.xlsx]CALCULATIONS

STORM SEWER CALCULATIONS

IDS ENGINEERING GROUP

CLIENT NAME: **CITY OF HOUSTON**
PROJECT NAME: **WBS NO. R-000267-0179-3 - LOCKWOOD LIFT STATION**
IDS JOB NO: **0057-085-00**
DATE PRINTED: May 11, 2026
DATE REVISED: May 11, 2026 BY: CM

SELECT STORM EVENT FREQUENCY: 100 year
SELECT APPROPRIATE LAND USE: Light Industrial
ENTER DESIGN CURB HEIGHT (inches): 0

Re-Generate Formulas

Line	Manhole or Inlet Number U / S	Manhole or Inlet Number D / S	Reach Length (feet)	Diameter or Rise (inches)	Span (inches)	No. of Barrels	Pipe Material	Pipe Grade Minimum (%)	Pipe Grade Actual (%)	Area (acres)	Sum of Area (acres)	Runoff Coeff.	Sum of C x Area (acres)	Travel Time (minutes)	Time of Concentration (minutes)	Intensity (in./hr.)	Sum of Flows (cfs)	Design Flow (cfs)	Design Velocity (fps)	Actual Velocity (fps)	Hydraulic Gradient (%)	Change in Head (feet)	Upstream Top of Grate (feet)	Hydraulic Grade Upstream (feet)	Hydraulic Grade Downstream (feet)	Manhole Drop (D/S) (feet)	Pipe Flowline Upstream (feet)	Pipe Flowline Downstream (feet)	Depth from Gutter to HGL (feet)	Depth of Cover (feet)	Upstream NG Elev. (feet)	Depth from NG to HGL (feet)
1	B-1	A-2	14.00	24		1	RCP	0.180%	0.180%	0.15	0.15	0.65	0.10	0.83	22.2	9.06	0.88	9.60	3.06	0.28	0.002%	0.00	19.45	16.12	16.12	0.00	14.15	14.12	3.33	3.30	19.45	3.33
2	A-2	***MH-2/OUT***	3.00	24		1	RCP	0.180%	1.000%	0.26	0.41	0.65	0.27	0.07	23.0	8.90	2.37	22.62	7.20	0.75	0.011%	0.00	18.56	16.09	16.09	0.00	***14.12***	***14.09***	2.47	2.44	18.56	2.47
3	A-3	MH-4	58.00	24		1	RCP	0.180%	0.638%	0.04	0.04	0.65	0.03	12.48	20.7	9.36	0.24	18.07	5.75	0.08	0.000%	0.00	18.59	16.57	16.57	0.00	***14.94***	***14.57***	2.02	1.65	18.59	2.02
4	MH-4	***J-4/OUT***	44.00	24		1	RCP	0.180%	1.114%	0.15	0.19	0.65	0.12	2.52	33.1	7.41	0.92	23.87	7.60	0.29	0.002%	0.00	19.11	11.87	11.87	0.00	***10.36***	***9.87***	7.24	6.75	19.11	7.24

NOTES:
1. This spreadsheet has been developed using the City of Houston criteria outlined in the November 2023 Infrastructure Design Manual. The Rational Method has been used to calculate flows, and Manning's Formula for pipes flowing full has been used to calculate velocities.
2. This spreadsheet calculates rainfall intensity using the b, d, and e constants for Harris County and the City of Houston, as outlined in Appendix H of the Harris County Infrastructure Regulations, and Chapter 9 of the November 2023 City of Houston Infrastructure Design Manual.
3. Minimum storm sewer grades and maximum velocities as established in the City of Houston design criteria have been used to establish the grades used in this system.
4. Land Use "SFR" represents Single-Family Residential development. Land Use "MFR" represents Multi-Family Residential development.
5. Design flow and velocity are based entirely on pipe grade and represent the condition when pipe is flowing full with the hydraulic grade line equal to the pipe grade, and are used to demonstrate that the pipe slopes used in the calculations conform to the City of Houston minimum and maximum standards.

Runoff Coefficient Table	
Land Use	C
SFR (> ½ ac. lots)	0.35
SFR (¼ - ½ ac. lots)	0.45
SFR (< ¼ ac. lots)	0.55
MFR (< 20 d.u./ac.)	0.65
MFR (>= 20 d.u./ac.)	0.80
Business Districts	0.80
Light Industrial	0.65
Heavy Industrial	0.75
Railroad Yard Areas	0.30
Parks/Open Areas	0.18
Land Use Varies	ENTER

Pipe Material	Mannings "n" Value	Pipe Description
CLAY	0.012	Extra Strength Vitrified Clay Pipe
CMP	0.024	Corrugated Metal Pipe
CMPSI	0.013	CMP w/ Smooth Interior
HDPE	0.013	High Density Polyethylene Pipe
PVC	0.013	Polyvinyl Chloride Pipe
RCA	0.013	Reinforced Concrete Arch Pipe
RCB	0.015	Reinforced Concrete Box Culvert
RCE	0.013	Reinforced Concrete Elliptical Pipe
RCP	0.013	Reinforced Concrete Pipe

Rainfall Freq. (yrs)	b	d	e
2 year	48.35	9.07	0.7244
5 year	52.32	7.88	0.6900
10 year	54.68	6.96	0.6623
25 year	57.79	5.89	0.6294
50 year	61.00	5.46	0.6096
100 year	***60.66***	***4.44***	***0.5797***
500 year	62.17	2.95	0.5196

Master Spreadsheet - Storm Sewer Calculations Updated 02/10/2025
\\idseg.com\FS\Projects\0000\005708500 CoH Lift Stations - FY 2023\Eng\Calcs\Drainage\[1. Lockwood Drainage Calcs.xlsx]CALCULATIONS

NO.	DATE	REVISION	APP.

IDS Engineering Group
13430 NW. Freeway, Suite 700
Houston, Tx. 77040
713.462.3178
TxEng Firm 2726 | TxSurv Firm 10110700

SURVEYED BY: KUO & ASSOCIATES, INC.
TBPE FIRM #F-4578; TBPLS FIRM #1007560

THIS DOCUMENT IS RELEASED FOR THE PURPOSE OF REVIEW UNDER THE AUTHORITY OF MARCEL KHOUW, P.E. 101807 ON 05/27/2026. IT IS NOT TO BE USED FOR CONSTRUCTION PURPOSES.

CITY OF HOUSTON
HOUSTON PUBLIC WORKS

LIFT STATION RENEWAL AND REPLACEMENT FY 2023

LOCKWOOD LIFT STATION DRAINAGE CALCULATIONS

WBS NUMBER	FOR CITY OF HOUSTON USE ONLY
R-000267-0179-4	
DRAWING SCALE	
HORIZ: VALUE VERT: N/A	
CITY OF HOUSTON PM	
NAWARAJ PANTA, P.E.	
SHEET NO. 22 OF 361	

DWG. NO. LCK-C-08

FILE PATH: \\idseg.com\FS\Projects\0000\005708500 CoH Lift Stations - FY 2023\CAD\DWG\PRODUCTION\22-LOCKWOOD CALCULATIONS.dwg

PLOTTED: 5/13/2026 6:22 PM

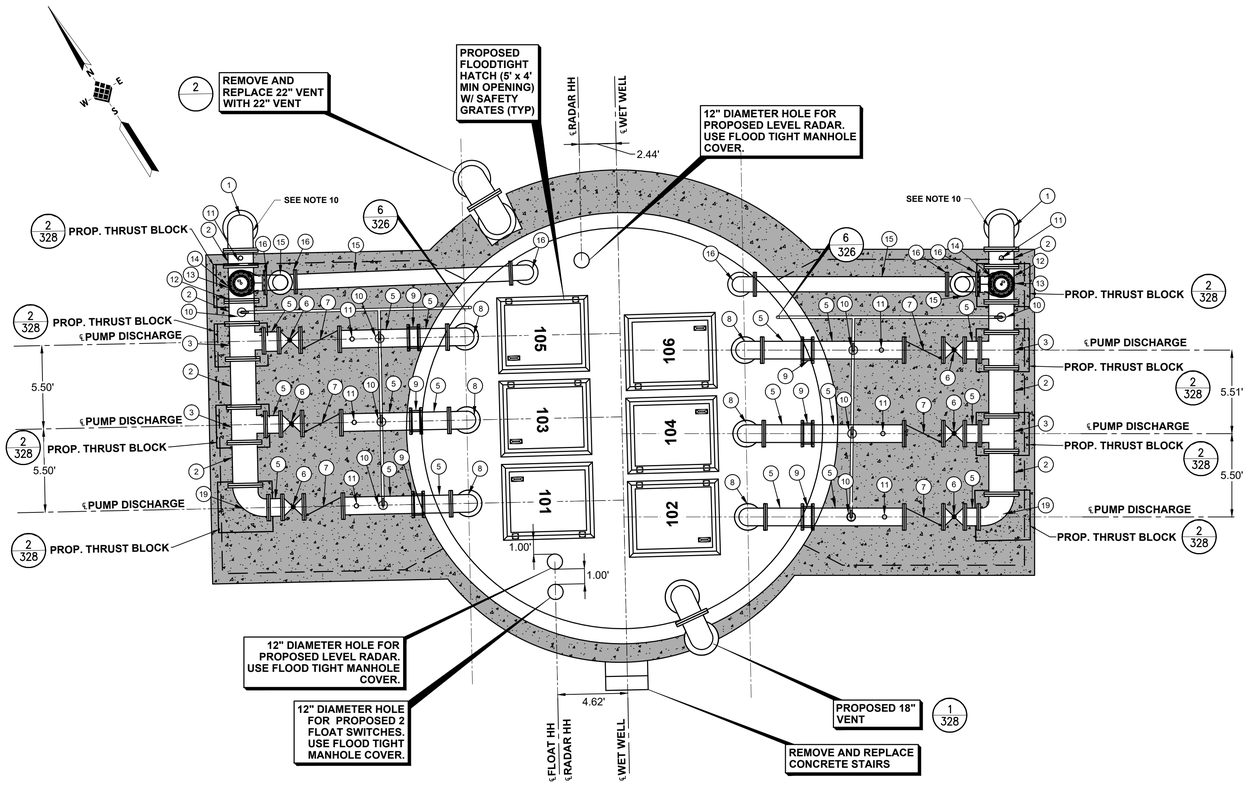

PLAN VIEW AT GRADE
SCALE: 1"=5'

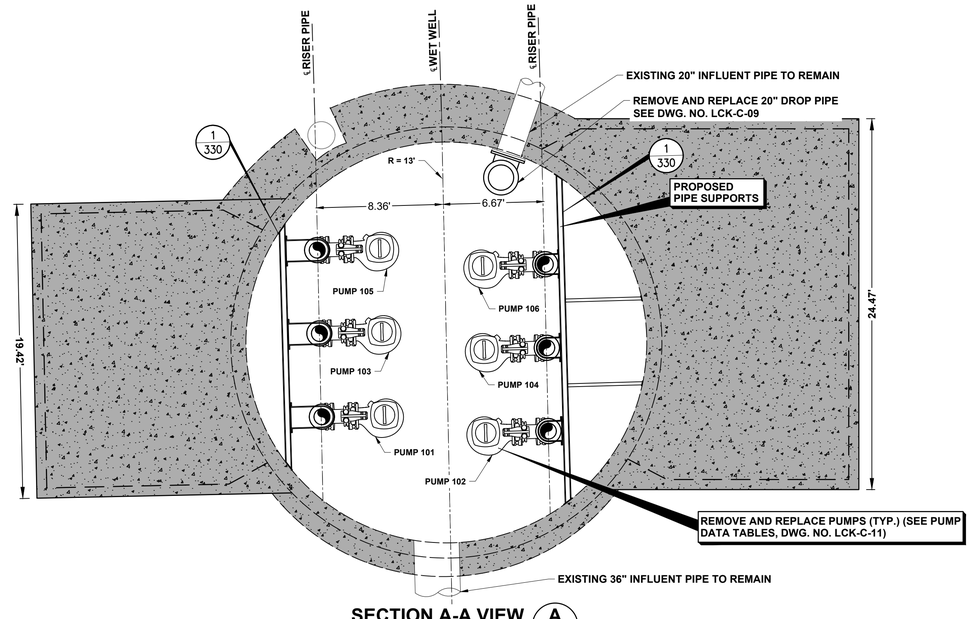

SECTION A-A VIEW A
SCALE: 1" = 5'

NOTES:

1. 1. ABRASIVE BLAST AND COAT ALL PIPING AND FITTINGS.
2. CONTRACTOR TO VERIFY DIMENSIONS REQUIRED TO INSTALL AND OPERATE VALVES.
3. EXISTING LIFT STATION WET WELL STRUCTURE TO REMAIN.
4. UV PROTECTIVE COATINGS ARE REQUIRED BY THE CITY OF HOUSTON ON ALL VENT PIPES.
5. LABEL HATCHES WITH THE CORRESPONDING PUMP NUMBER USING A 12–INCH BY 6–INCH ALUMINUM PLATE ENGRAVED WITH 1.5–INCH LETTERING WELDED TO THE HATCH.
6. CONTRACTOR TO CONFIRM SIZE AND LOCATION OF THE WET WELL HATCHES PER HATCH AND PUMP MANUFACTURER REQUIREMENTS.
7. PUMP AND ANCHOR BOLTS ARE TO BE ADHESIVE TYPE, AND EMBEDDED IN THE CONCRETE SLAB. CONTRACTOR TO SUBMIT DESIGN OF PUMP ANCHOR BOLTS AND PATTERN, INCLUDING CALCULATIONS, CURING SHOP DRAWING SUBMISSION.
8. ALL PIPING IN THE WET WELL SHALL BE FLANGED. NO FLANGED COUPLING ADAPTORS, OR VICTAULIC STYLE COUPLINGS SHALL BE PERMITTED INSIDE OF THE WET WELL.
9. ACCESS HATCHES SHALL BE ALUMINUM AND FOREST GREEN. SAFETY GRATING SHALL BE FURNISHED WITH SAFETY ORANGE POWDER COAT FINISH.
10. PIPING BELOW 90 DEGREE BEND (KEY NOTE 1) IS NOT SHOWN. THIS PIPING SHALL BE INCLUDED IN LUMP SUM BID ITEMS.
11. WET WELL TO BE COATED WITH PROTECTIVE COATING PER PROJECT SPECIFICATIONS, CONSULT WITH CITY OF HOUSTON PROJECT MANAGER FOR APPROVED PRODUCTS. COATING SHALL COVER ALL CONCRETE SURFACES, AND SHALL EXTEND TO A MINIMUM OF 12" BELOW THE LOW WATER ELEVATION.

1' 0' 1'
SCALE
1" = 1'

ITEMS TO BE REMOVED & REPLACED		
KEYED NOTES	ITEM	QTY
1	90° BEND (20")	2
2	SPOOL PIECE (20")	6
3	TEE (20" x 14")	5
4	BLIND FLANGE (20")	1
5	SPOOL PIECE (14")	18
6	PLUG VALVE (14")	6
7	CHECK VALVE (14")	6
8	90° BEND (14")	6
9	FLEXIBLE COUPLING (14")	6
10	3" AIR RELEASE & VACUUM VALVE ASSEMBLY	8
11	PRESSURE GAUGE ASSEMBLY	6
12	TEE (20" x 12")	1
13	PLUG VALVE (12")	2
14	SURGE RELIEF VALVE (12") SET TO OPEN AT 50 PSI	2
15	SPOOL PIECE (12")	4
16	90° BEND (12")	6
17	PLUG VALVE (20")	1
18	TEE (20" x 20")	1
19	REDUCING 90° BEND (20" x 14")	2

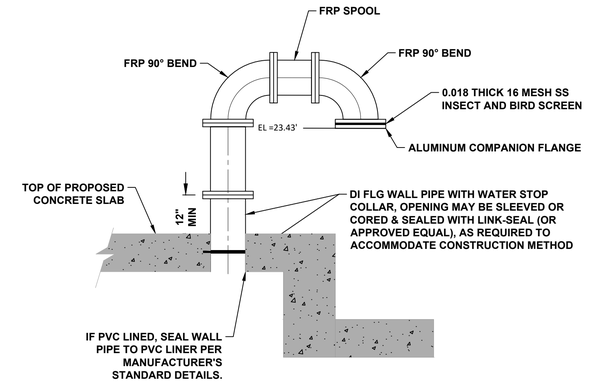

PROPOSED STRUCTURE PENETRATION 1
SCALE: N.T.S.

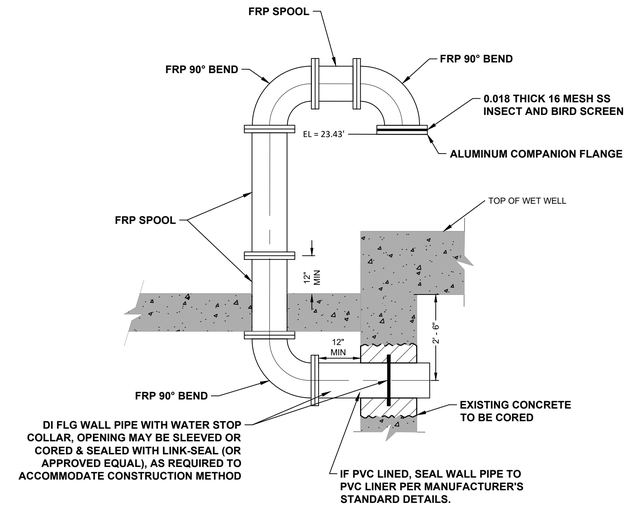

EXISTING STRUCTURE PENETRATION 2
SCALE: N.T.S.

LEGEND

- # / # — DETAIL NO. / SHEET NO.
- EXISTING CONCRETE
- PROPOSED CONCRETE

NO.	DATE	REVISION	APP.

IDS Engineering Group
13430 NW. Freeway, Suite 700
Houston, Tx. 77040
713.462.3178
TxEng Firm 2726 | TxSurv Firm 10110700

SURVEYED BY: KUO & ASSOCIATES, INC.
TBPE FIRM #F-4578; TBPLS FIRM #1007560

THIS DOCUMENT IS RELEASED FOR THE PURPOSE OF REVIEW UNDER THE AUTHORITY OF MARCEL KHOUW, P.E. 101807 ON 05/27/2026. IT IS NOT TO BE USED FOR CONSTRUCTION PURPOSES.

CITY OF HOUSTON
HOUSTON PUBLIC WORKS

LIFT STATION RENEWAL AND REPLACEMENT FY 2023

LOCKWOOD LIFT STATION PLAN AT GRADE AND BASE

WBS NUMBER	FOR CITY OF HOUSTON USE ONLY
R–000267–0179–4	
DRAWING SCALE	
HORIZ: AS NOTED VERT: N/A	
CITY OF HOUSTON PM	
NAWARAJ PANTA, P.E.	
DWG. NO. LCK–C–09	SHEET NO. 23 OF 361

FILE PATH: \\idseg.com\FS\Projects\0000\005708500 CoH Lift Stations – FY 2023\CAD\DWG\PRODUCTION\23–LOCKWOOD PLAN AT GRADE.dwg

PLOTTED: 5/13/2026 6:22 PM

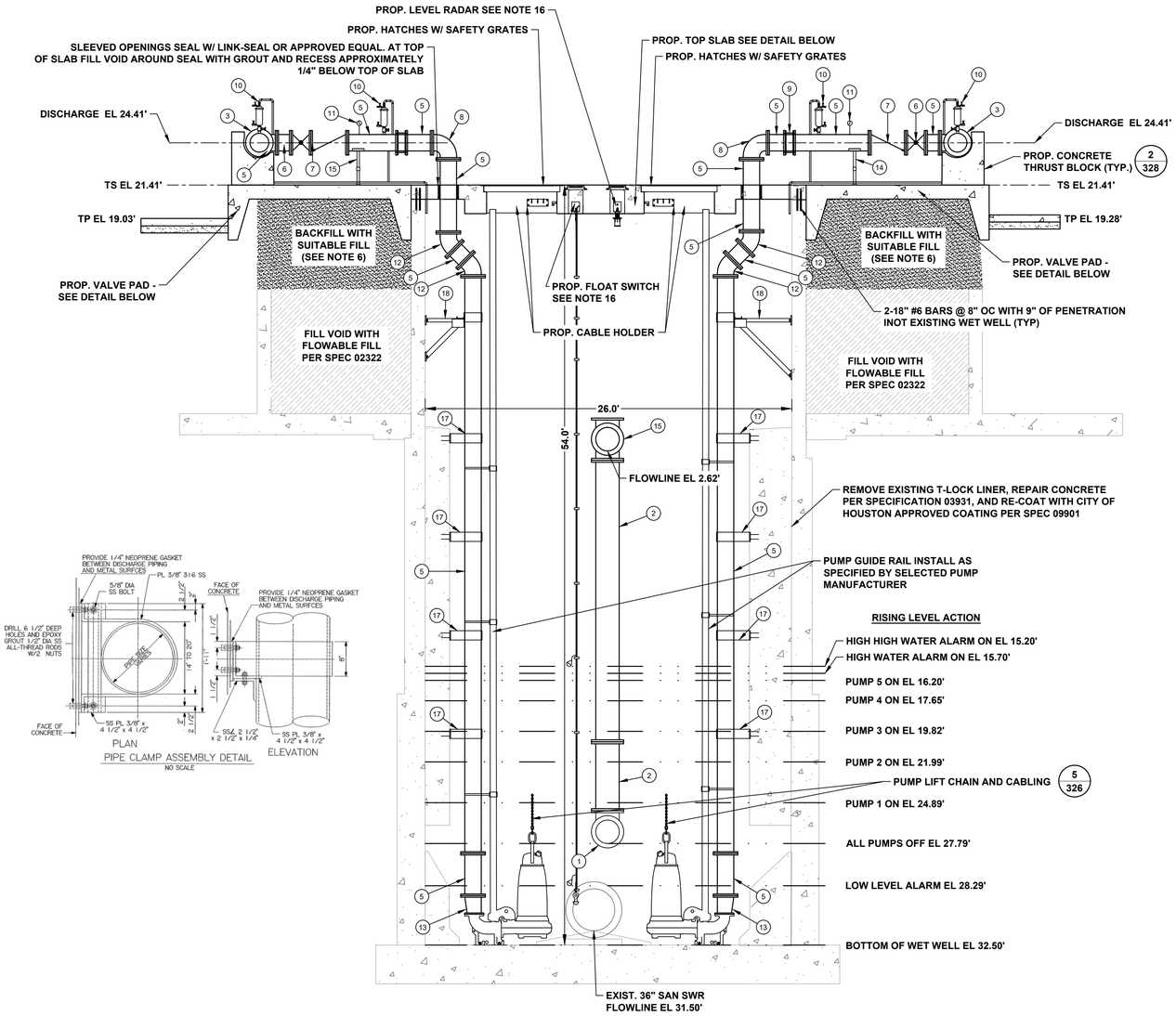

SECTIONAL ELEVATION A

SCALE: 1" = 5'

PIPE CLAMP ASSEMBLY DETAIL

NO SCALE

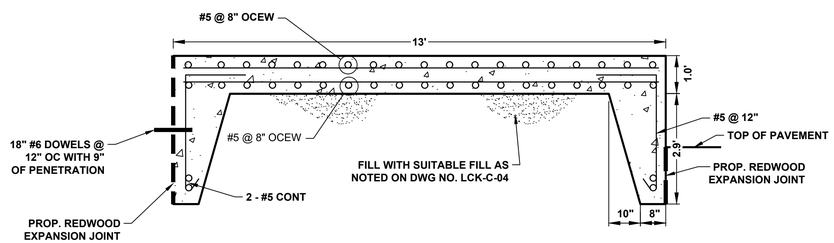

DISCHARGE PIPING CONCRETE SLAB DETAIL

SCALE: 1" = 2'

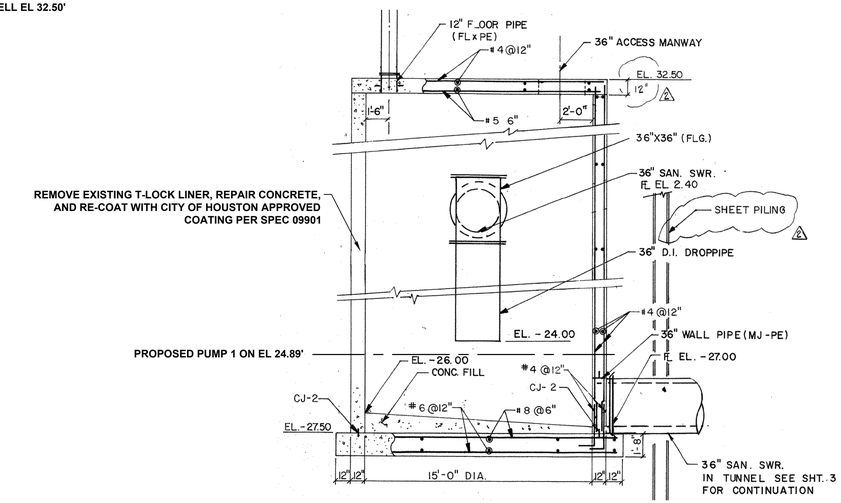

EXISTING MANHOLE (MH# 5805771) - TO BE REHABILITATED

SCALE: 1" = 5'

ITEMS TO BE REMOVED & REPLACED		
KEYED NOTES	ITEM	QTY
1	90° BEND (20")	1
2	SPOOL PIECE (20")	2
3	TEE (20" x 14")	2
4	TEE (20" x 14") W/ BLIND FLANGE (20")	0
5	SPOOL PIECE (14")	15
6	PLUG VALVE (14")	2
7	CHECK VALVE (14")	2
8	90° BEND (14")	2
9	FLEXIBLE COUPLING (14")	2
10	3" AIR RELEASE & VACUUM VALVE ASSEMBLY	4
11	PRESSURE GAUGE ASSEMBLY	6
12	45° BEND (14")	4
13	ECCENTRIC REDUCER (14" x 12")	2
14	ADJUSTABLE PIPE SUPPORT	6
15	TEE (20" x 20")	1
16	90° BEND (24") (NOT SHOWN FOR CLARITY, SEE NOTE 11)	1
17	PIPE CLAMP ASSEMBLY (SEE DETAIL THIS SHEET)	24
18	316 STAINLESS STEEL SUPPORT	6

NOTES:

1. ABRASIVE BLAST AND COAT ALL PIPING AND FITTINGS NOT BEING REPLACED IN WET WELL.
2. CONTRACTOR TO VERIFY DIMENSIONS REQUIRED TO INSTALL AND OPERATE VALVES.
3. EXISTING LIFT STATION WET WELL STRUCTURE TO REMAIN.
4. UV PROTECTIVE COATINGS ARE REQUIRED BY THE CITY OF HOUSTON ON ALL VENT PIPES.
5. LABEL HATCHES WITH THE CORRESPONDING PUMP NUMBER USING A 12–INCH BY 6–INCH ALUMINUM PLATE ENGRAVED WITH 1.5–INCH LETTERING WELDED TO THE HATCH.
6. FILL VOID LEFT BY REMOVAL OF EXISTING VALVE VAULT WITH SUITABLE FILL.
7. SEE ELECTRICAL PLANS FOR ADDITIONAL IMPROVEMENTS.
8. ABRASIVE BLAST AND COAT TO BE IN ACCORDANCE WITH SYSTEM 108 PER SPEC SECTION 09901 PART 2.03J.
9. FULL DROP PIPE CONFIGURATION NOT SHOWN FOR CLARITY.
10. CONTRACTOR TO CONFIRM SIZE AND LOCATION OF THE WET WELL HATCHES PER HATCH AND PUMP MANUFACTURER REQUIREMENTS
11. PUMP AND ANCHOR BOLTS ARE THE BE ADHESIVE TYPE, AND EMBEDDED IN THE CONCRETE SLAB. CONTRACTOR TO SUBMIT DESIGN OF PUMP ANCHOR BOLTS AND PATTERN, INCLUDING CALCULATIONS, DURING SHOP DRAWINGS SUBMISSION.
12. ALL PIPING IN THE WET WELL SHALL BE FLANGED. NO FLANGED COUPLING ADAPTORS, OR VICTAULIC STYLE COUPLINGS SHALL BE PERMITTED INSIDE OF THE WET WELL.
13. ACCESS HATCHES SHALL BE FOREST GREEN. SAFETY GRATING SHALL BE FURNISHED WITH SAFETY ORANGE POWDER COAT FINISH.
14. INSTALL PLUG VALVES TO OPEN UPWARD AND TO CLOSE TO A SEATING POSITION.
15. INSTALL CHECK VALVES SO THAT THE WEIGHT LEVER POSITION IS APPROXIMATELY 45 DEGREES BELOW THE VALVE HORIZONTAL CENTER LINE IN THE CLOSE POSITION AND APPROXIMATELY 45 DEGREES ABOVE THE HORIZONTAL CENTER LINE IN THE FULL OPEN POSITION.
16. PROPOSED FLOAT SWITCH AND LEVEL RADARS SHOWN FOR REFERENCE. REFER TO DWG. NO. LCK–C–09 AND LCK–E–08 FOR LOCATION AND SIZE
17. CONTRACTOR TO SUBMIT A WET WELL TOP SLAB STRUCTURAL PLAN SIGNED AND SEALED BY A REGISTERED ENGINEER IN THE STATE OF TEXAS.
18. WET WELL TO BE COATED WITH PROTECTIVE COATING PER PROJECT SPECIFICATIONS, CONSULT WITH CITY OF HOUSTON PROJECT MANAGER FOR APPROVED PRODUCTS. COATING SHALL COVER ALL CONCRETE SURFACES, AND SHALL EXTEND TO A MINIMUM OF 12" BELOW THE LOW WATER ELEVATION.

NO.	DATE	REVISION	APP.

LEGEND

- # / # — DETAIL NO. / SHEET NO.
- EXIST. CONCRETE
- PROP. CONCRETE
- PROP. FLOWABLE FILL
- PROP. SUITABLE FILL

IDS Engineering Group
13430 NW. Freeway, Suite 700
Houston, Tx. 77040
713.462.3178
TxEng Firm 2726 | TxSurv Firm 10110700

SURVEYED BY: KUO & ASSOCIATES, INC.
TBPE FIRM #F-4578; TBPLS FIRM #1007560

THIS DOCUMENT IS RELEASED FOR THE PURPOSE OF REVIEW UNDER THE AUTHORITY OF MARCEL KHOUW, P.E. 101807 ON 05/27/2026. IT IS NOT TO BE USED FOR CONSTRUCTION PURPOSES.

CITY OF HOUSTON
HOUSTON PUBLIC WORKS

LIFT STATION RENEWAL AND REPLACEMENT FY 2023

LOCKWOOD LIFT STATION ELEVATION SECTION

WBS NUMBER	FOR CITY OF HOUSTON USE ONLY
R–000267–0179–4	
DRAWING SCALE	
HORIZ: AS NOTED VERT: N/A	
CITY OF HOUSTON PM	
NAWARAJ PANTA, P.E.	
DWG. NO. LCK–C–10	SHEET NO. 24 OF 361

FILE PATH: \\idseg.com\FS\Projects\0000\005708500 CoH Lift Stations – FY 2023\CAD\DWG\PRODUCTION\24–LOCKWOOD ELEV SECTION.dwg

PLOTTED: 5/13/2026 6:22 PM

LIFT STATION OVERALL DESIGN POINT
PWWF = 23.1 MGD (16,042 GPM)

LOCKWOOD LIFT STATION REHABILITATION
FLYGT NP 3306/665 3 ~ 870

DESIGN POINT
9,625 GPM @ 66.02

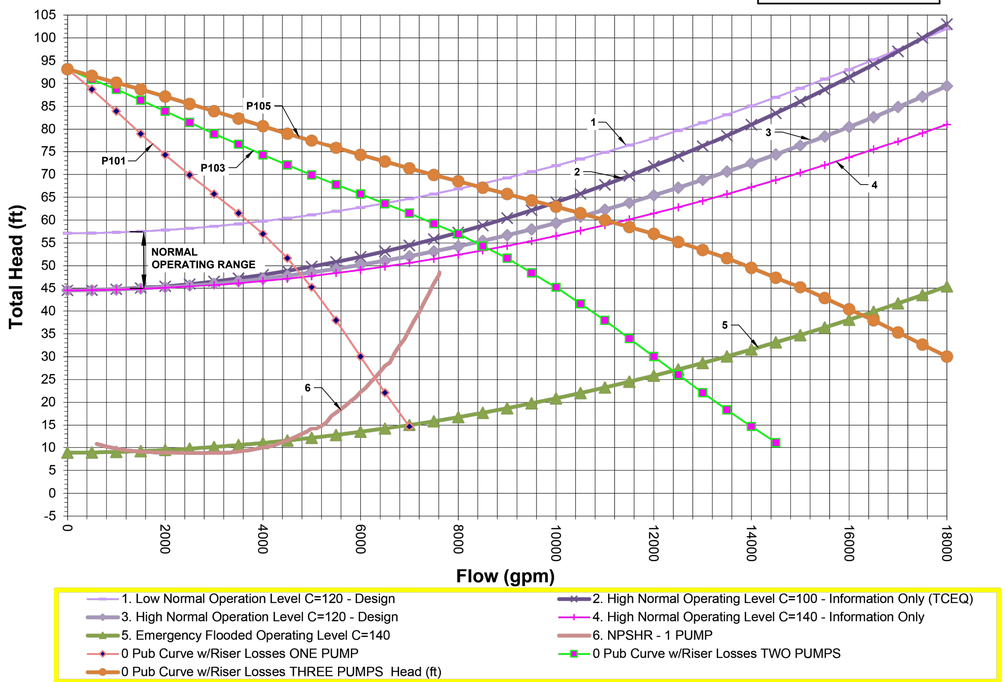

LOCKWOOD LIFT STATION REHABILITATION
FLYGT NP 3306/665 3 ~ 870

DESIGN POINT
6,417 GPM @ 61.10

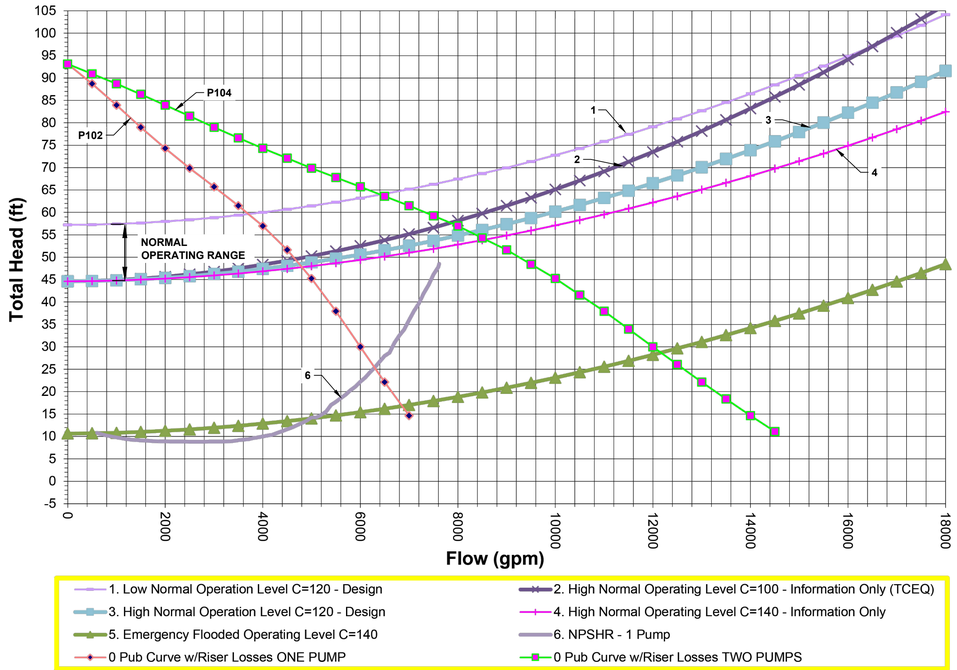

NOTES:

1. PUMP ROTATION SHALL BE AS FOLLOWS: P106(STANDBY)–>P101, P105–>P102, P104–>P103, P103–>P104, P102–>P105, P101–>P106(STANDBY).

STATION OPERATING TABLES		
PROPOSED CONDITION - 23.1 MGD		
RISING WATER LEVEL		
WATER LEVEL ELEVATION	ACTION	PUMP(S) IN OPERATION
-27.79	PUMPS OFF LEVEL - NO ACTION	ALL PUMPS ARE OFF
-24.89	PUMP 101 TURNS ON	PUMP 101 ON
-21.99	PUMP 102 TURNS ON	PUMP 101 AND 102 ON
-19.82	PUMP 103 TURNS ON	PUMP 101, 102, AND 103 ON
-17.65	PUMP 104 TURNS ON	PUMP 101, 102, 103, AND 104 ON
-16.20	PUMP 105 TURNS ON	PUMP 101, 102, 103, 104, AND 105 ON
-15.70	HIGH WATER ALARM ON	HIGH WATER ALARM SOUND
-15.20	HIGH HIGH WATER ALARM ON (FLOAT ON LEVEL)	FIRM PUMPS ON (FLOATS)
FALLING WATER LEVEL		
WATER LEVEL ELEVATION	ACTION	PUMP(S) IN OPERATION
-15.20	HIGH HIGH WATER ALARM ON (FLOAT ON LEVEL)	FIRM PUMPS ON (FLOATS)
-15.70	FLOAT OFF LEVEL	HIGH WATER ALARM SOUND
-16.20	HIGH WATER ALARM TURNS OFF	PUMP 101, 102, 103, 104, AND 105 ON
-17.65	PUMP 105 TURNS OFF	PUMP 101, 102, 103, AND 104 ON
-19.82	PUMP 104 TURNS OFF	PUMP 101, 102, AND 103 ON
-21.99	PUMP 103 TURNS OFF	PUMP 101 AND 102 ON
-24.89	PUMP 102 TURNS OFF	PUMP 101 ON
-27.79	PUMP 101 TURNS OFF	ALL PUMPS OFF - SEE NOTE 1
-28.29	LOW LEVEL ALARM	-

PUMP DATA TABLE*

PUMP CHARACTERISTICS	PUMP NO. 101	PUMP NO. 102	PUMP NO. 103	PUMP NO. 104	PUMP NO. 105	PUMP NO. 106
MOTOR DATA						
NOMIMAL SIZE (HP)	85	85	85	85	85	85
MAX SPEED (RPM)	880	880	880	880	880	880
SOLIDS PASSAGE						
MINIMUM SPHERE (IN)	3	3	3	3	3	3
CAPACITY (GPM)						
DESIGN	3180	3180	3180	3180	3180	3180
RUNOUT	7690	7690	7690	7690	7690	7690
DISCHARGE HEAD (FT)						
DESIGN	66.80	66.80	66.80	66.80	66.80	66.80
RUNOUT	19	19	19	19	19	19
SHUT OFF	93.1	93.1	93.1	93.1	93.1	93.1
EFFICIENCY (%)						
DESIGN	80.9	80.9	80.9	80.9	80.9	80.9
NPSHR (FT)						
DESIGN	8.9	8.9	8.9	8.9	8.9	8.9
RUNOUT	48.3	48.3	48.3	48.3	48.3	48.3
PUMP CYCLE TIME (MIN)	10	10	10	10	10	10
CUMULATIVE CAPACITY (GPM)	3,734	6,508	8,500	12,234	15,008	-

*Flygt NP 3306/665 3 ~870 used for all pump calculations.

NO.	DATE	REVISION	APP.

IDS Engineering Group
13430 NW. Freeway, Suite 700
Houston, Tx. 77040
713.462.3178
TxEng Firm 2726 | TxSurv Firm 10110700

SURVEYED BY: KUO & ASSOCIATES, INC.
TBPE FIRM #F-4578; TBPLS FIRM #1007560

THIS DOCUMENT IS RELEASED FOR THE PURPOSE OF REVIEW UNDER THE AUTHORITY OF MARCEL KHOUW, P.E. 101807 ON 05/27/2026. IT IS NOT TO BE USED FOR CONSTRUCTION PURPOSES.

CITY OF HOUSTON
HOUSTON PUBLIC WORKS

LIFT STATION RENEWAL AND REPLACEMENT FY 2023

MECHANICAL LS PUMP CURVE DATA TABLES (LOCKWOOD)

WBS NUMBER	FOR CITY OF HOUSTON USE ONLY
R-000267-0179-4	
DRAWING SCALE	
HORIZ: N/A VERT: N/A	
CITY OF HOUSTON PM	
NAWARAJ PANTA, P.E.	
DWG. NO. LCK-C-11	SHEET NO. 25 OF 361

FILE PATH: \\Idseg.com\FS\Projects\0000\005708500 CoH Lift Stations – FY 2023\CAD\DWG\PRODUCTION\25-LOCKWOOD CURVE DATA.dwg

PLOTTED: 5/14/2026 4:01 PM

FILE PATH: \\idseg.com\FS\Projects\0000\005708500 CoH Lift Stations - FY 2023\CAD\DWG\PRODUCTION\26-LOCKWOOD TOP SLAB DETAIL.dwg

SCALE
5' 0' 5'
1" = 5'

NOTES:

1. CONTRACTOR TO CONFIRM SIZE AND LOCATION OF THE WET WELL HATCHES PER HATCH AND PUMP MANUFACTURER REQUIREMENTS
2. CONTRACTOR TO SUBMIT A WET WELL TOP SLAB STRUCTURAL PLAN SIGNED AND SEALED BY A REGISTERED ENGINEER IN THE STATE OF TEXAS.

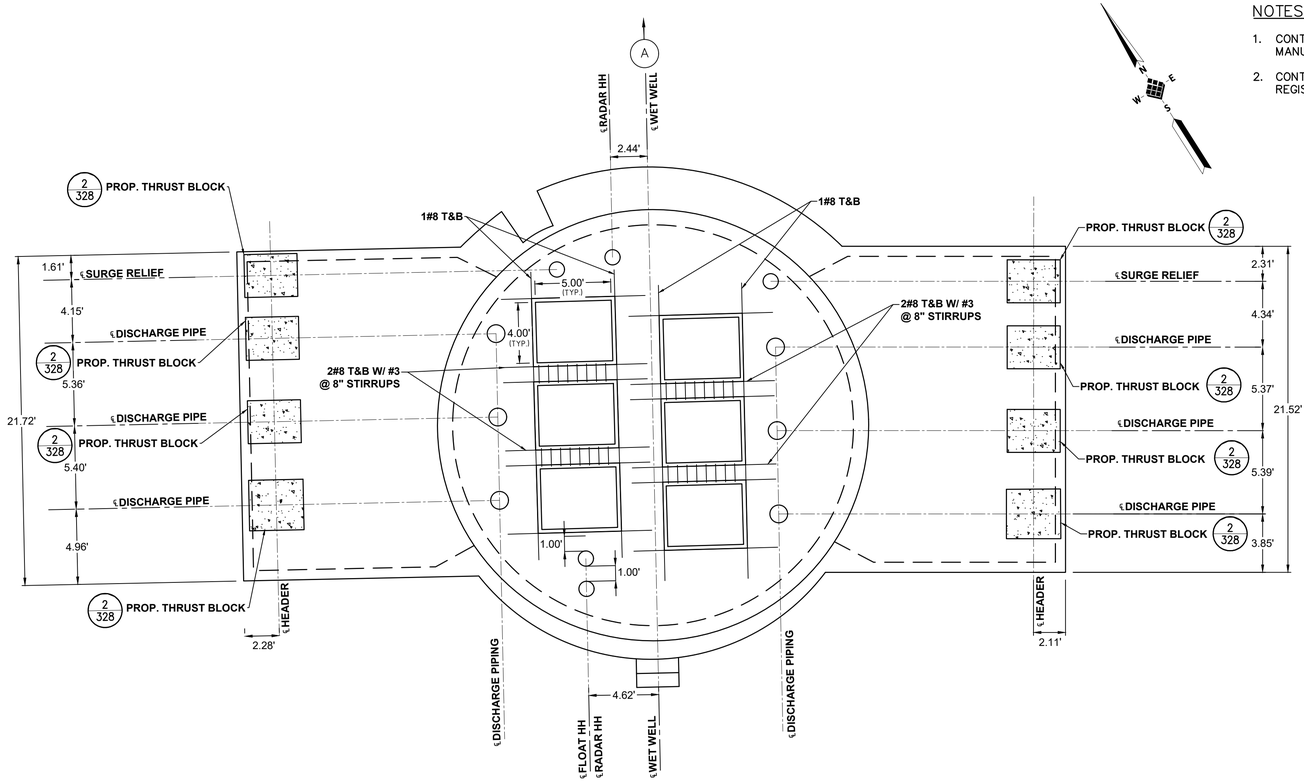

TOP SLAB DETAIL
SCALE: 1" = 5'

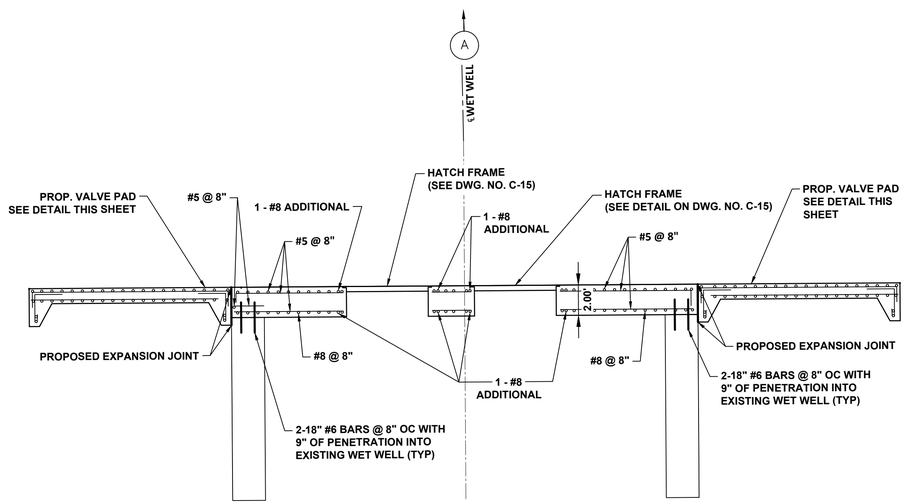

WET WELL TOP SLAB DETAIL
SCALE: 1" = 5' (SEE NOTE 2)

LEGEND

- # / # DETAIL NO. / SHEET NO.
- EXISTING CONCRETE
- PROPOSED CONCRETE

NO.	DATE	REVISION	APP.

IDS Engineering Group
13430 NW. Freeway, Suite 700
Houston, Tx. 77040
713.462.3178
TxEng Firm 2726 | TxSurv Firm 10110700

SURVEYED BY: KUO & ASSOCIATES, INC.
TBPE FIRM #F-4578; TBPLS FIRM #1007560

THIS DOCUMENT IS RELEASED FOR THE PURPOSE OF REVIEW UNDER THE AUTHORITY OF MARCEL KHOUW, P.E. 101807 ON 05/27/2026. IT IS NOT TO BE USED FOR CONSTRUCTION PURPOSES.

CITY OF HOUSTON
HOUSTON PUBLIC WORKS

LIFT STATION RENEWAL AND REPLACEMENT FY 2023

LOCKWOOD LIFT STATION TOP SLAB DETAIL

WBS NUMBER	FOR CITY OF HOUSTON USE ONLY
R-000267-0179-4	
DRAWING SCALE	
HORIZ: 1" = 5' VERT: N/A	
CITY OF HOUSTON PM	
NAWARAJ PANTA, P.E.	
SHEET NO. 26 OF 361	

DWG. NO.
LCK-C-12

PLOTTED: 5/13/2026 6:22 PM

FILE PATH: \\idseg.com\FS\Projects\0000\005708500 CoH Lift Stations - FY 2023\CAD\DWG\PRODUCTION\27-LOCKWOOD PROP BLDG.dwg

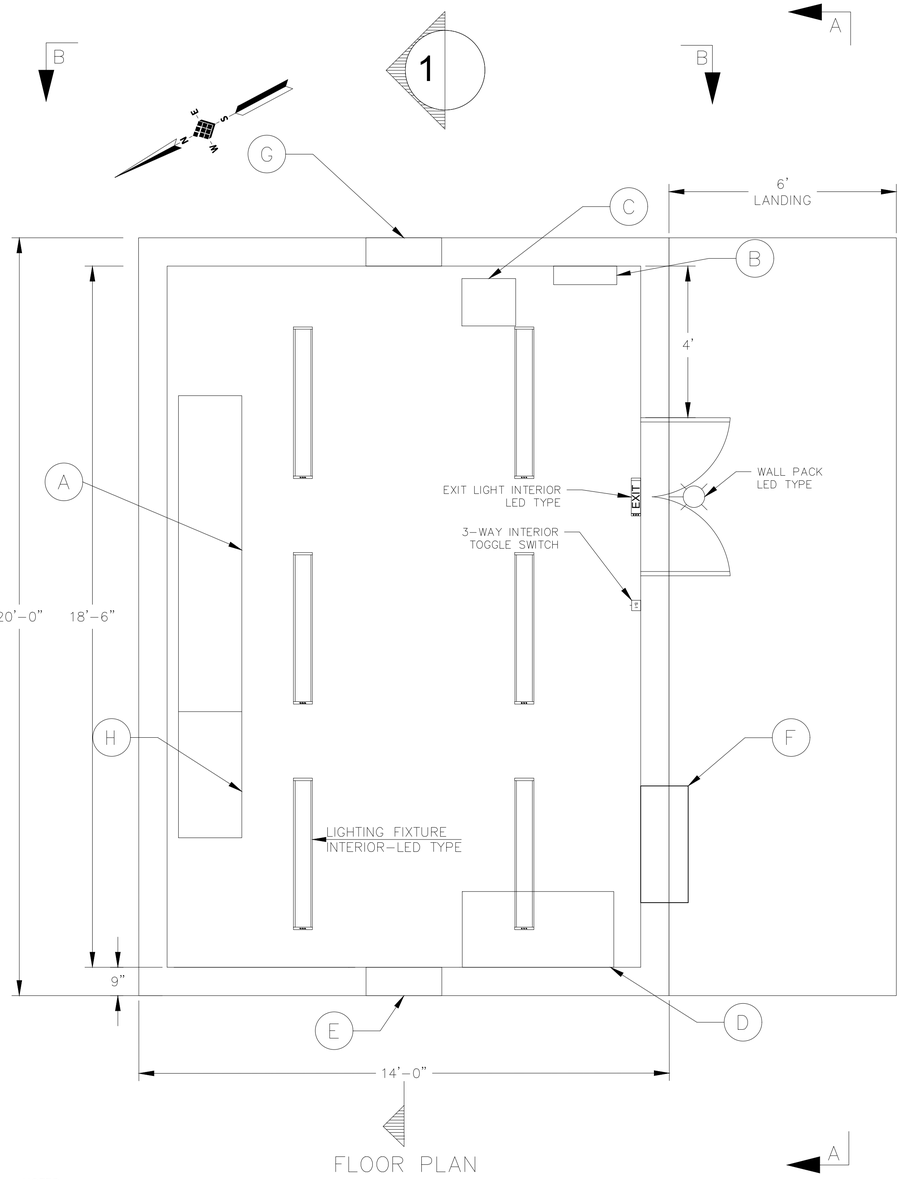

FLOOR PLAN

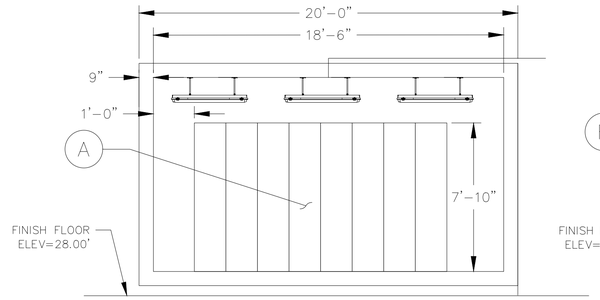

TYPICAL SECTION-1
SCALE: N.T.S.

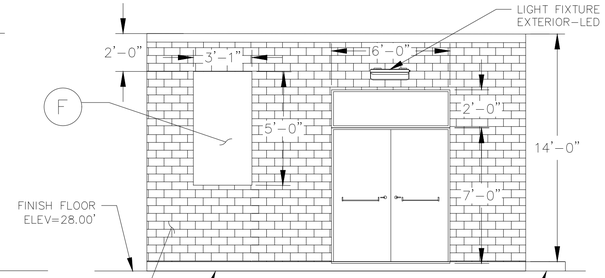

SIDE ELEVATION 1
SCALE: N.T.S.

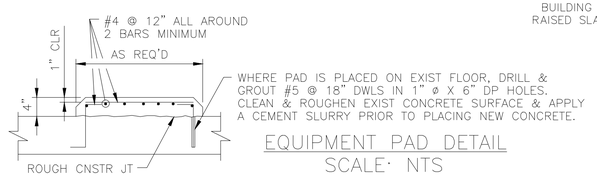

EQUIPMENT PAD DETAIL
SCALE: NTS

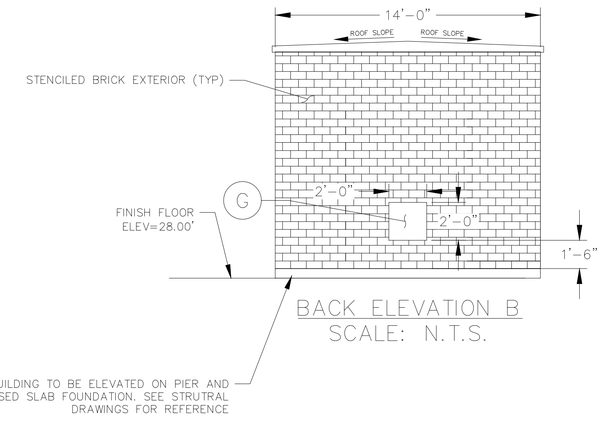

BACK ELEVATION B
SCALE: N.T.S.

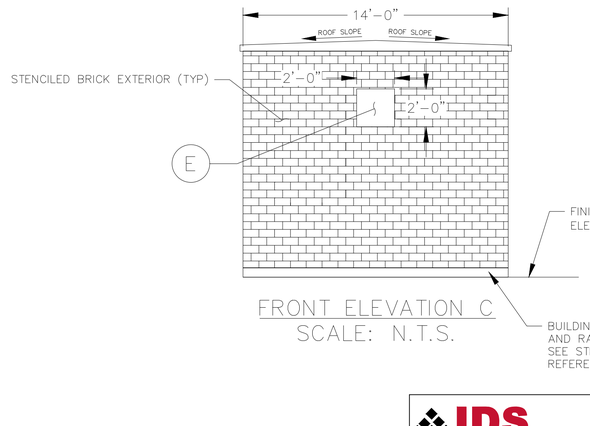

FRONT ELEVATION C
SCALE: N.T.S.

NOTES:

1. PROVIDE DEFERRED SUBMITTAL TO THE CITY OF HOUSTON CODE ENFORCEMENT FOR STRUCTURAL DESIGN OF PRECAST CONCRETE BUILDING.
2. THE CONTRACTOR SHALL SUBMIT FABRICATED DRAWINGS OF PRE-FABRICATED CONCRETE BUILDINGS AND CONCRETE FOUNDATIONS SIGNED AND SEALED BY A PROFESSIONAL ENGINEER IN THE STATE OF TEXAS AS SHOWN ON DRAWINGS FOR APPROVAL BY ENGINEER. PLATFORM MUST BE MANUFACTURED BY A CITY OF HOUSTON APPROVED FABRICATOR. A LIST OF APPROVED FABRICATORS CAN BE FOUND AT THE FOLLOWING LINK: https://www.houstonpermittingcenter.org/resources?keys=approved+fabricators
3. THE BUILDING IS GENERAL PURPOSE, NON-CLASSIFIED, NON-BLAST RATED.
4. ELECTRICAL CONDUITS INTO CONTROL BUILDING SHALL BE LOCATED AND POSITIONED PRIOR TO POURING BUILDING FOUNDATION OR IF PRECAST.
5. THE HVAC UNITS SHALL BE SIZED BASED ON HEAT LOSS CALCULATIONS. COORDINATE AC/HEAT PUMP OPENING SIZE WITH SELECTED MANUFACTURE'S RECOMMENDATIONS.
6. BUILDING DOOR SHALL BE OF 316 STAINLESS STEEL TYPE.
7. THE DOUBLE ENTRANCE DOORS SHALL BE 72" (WIDE), 84" (HEIGHT), WITH 24" HIGH.
8. OPENINGS FOR BELTLESS FAN (24"X24") ON TOP OF WALL ELEVATION WITH 24"X24" LOUVER ON THE BOTTOM. BOTH UNITS SHALL BE PROVIDED WITH REMOVABLE COVERS FOR STANDBY USE.
9. FOR LIGHTING PLAN SEE DRAWING LCK-E-07.
10. WALL UNITS SHALL BE HEAVY-DUTY EXTERIOR WALL MOUNTED HEAT PUMP TYPE UNIT. WINDOW AC UNITS NOT ALLOWED.
11. CONTRACTOR SHALL VERIFY EQUIPMENT OPENING WITH THE SELECTED MANUFACTURER'S RECOMMENDATION.

EQUIPMENT IDENTIFICATION LIST

ITEM	TAG NO.	DESCRIPTION
A		480V MCC
B		480 V - 240 / 120 V SINGLE PHASE POWER PANEL BOARD
C		480 V - 240 / 120 V SINGLE PHASE LIGHTING TRANSFORMER
D		CONTROL PANEL
E		EXHAUST FAN
F		WALL MOUNTED HVAC UNIT/ W SS BURGLAR BARS (NOTE J)
G		LOUVER
H		ATS

NO.	DATE	REVISION	APP.

IDS Engineering Group
13430 NW. Freeway, Suite 700
Houston, Tx. 77040
713.462.3178
TxEng Firm 2726 | TxSurv Firm 10110700

SURVEYED BY: KUO & ASSOCIATES, INC.
TBPE FIRM #F-4578; TBPLS FIRM #1007560

THIS DOCUMENT IS RELEASED FOR THE PURPOSE OF REVIEW UNDER THE AUTHORITY OF MARCEL KHOUW, P.E. 101807 ON 05/27/2026. IT IS NOT TO BE USED FOR CONSTRUCTION PURPOSES.

CITY OF HOUSTON
HOUSTON PUBLIC WORKS

LIFT STATION RENEWAL
AND REPLACEMENT FY 2023

ARCHITECTURAL PRECAST CONCRETE CONTROL BUILDING 4

WBS NUMBER	FOR CITY OF HOUSTON USE ONLY
R-000267-0179-4	
DRAWING SCALE	
HORIZ: N.T.S. VERT: N/A	
CITY OF HOUSTON PM	
NAWARAJ PANTA, P.E.	
SHEET NO. 27 OF 361	

DWG. NO. LCK-A-01

PLOTTED: 5/13/2026 6:22 PM

FILE PATH: \\dseg.com\FS\Projects\0000\0057085OO CoH Lift Stations - FY 2023\CAD\DWG\PRODUCTION\28-LOCKWOOD PLATFORM.dwg

2 ELEVATION VIEW
N.T.S.

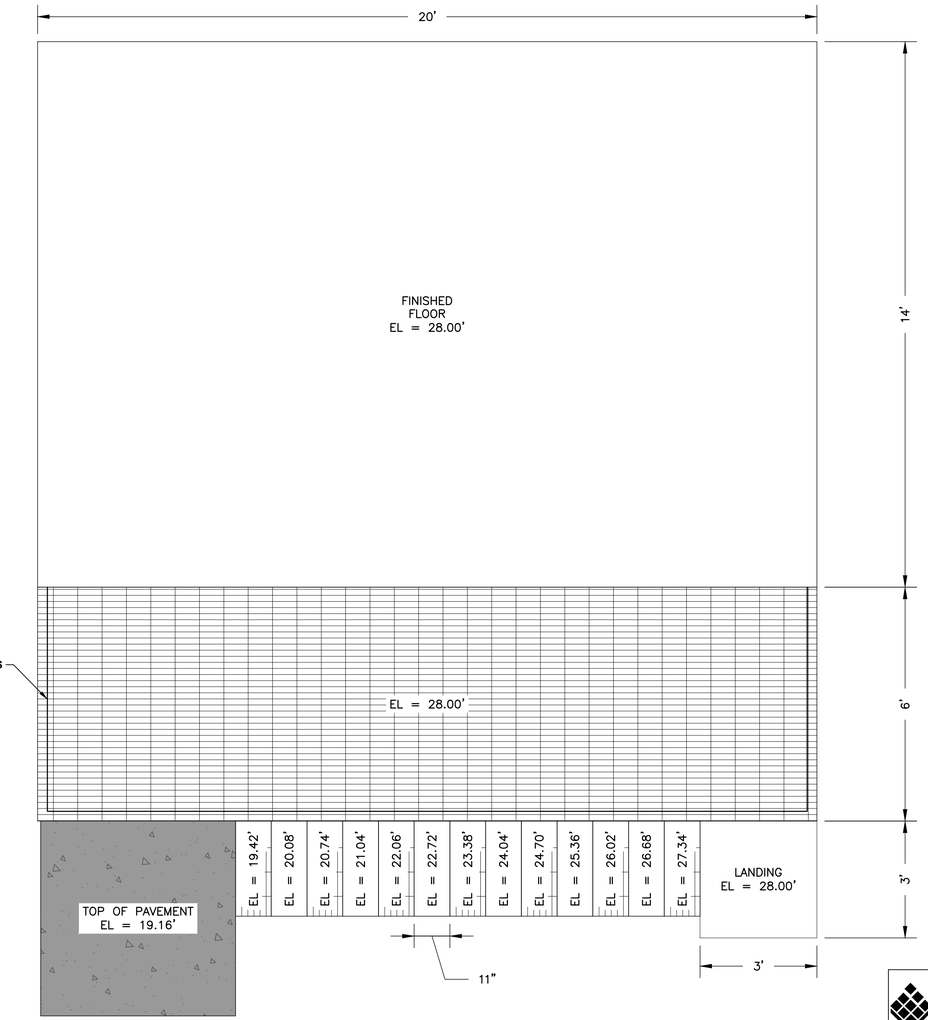

1 PLAN VIEW
N.T.S.

NOTES:

1. CONTRACTOR TO SUBMIT SHOP DRAWINGS FOR PLATFORM, BUILDING, STAIRCASE, HANDRAIL, AND GUARDRAIL SIGNED AND SEALED BY A PROFESSIONAL ENGINEER LICENSED IN THE STATE OF TEXAS FOR APPROVAL TO ENGINEER OF RECORD PRIOR TO PROCUREMENT AND INSTALLATION OF ABOVE STRUCTURAL ELEMENTS.
2. PLATFORM AND BUILDING SHOWN IS A REPRESENTATION OF FINAL PLATFORM. FINAL STRUCTURAL DESIGN MAY VARY BASED ON SIGNED, SEALED, AND APPROVED DEFERRED SUBMITTALS.
3. PLATFORM AND BUILDING SHOULD BE DESIGNED TO WITHSTAND LOADS FROM A 500-YEAR EVENT, BASED ON THE FEMA WSEL FOR A 500-YR FLOOD EVENT.
4. PLATFORM GRATING SHALL BE ALUMINUM POWDER COATED.
5. PLATFORM AND BUILDING SHALL BE DESIGNED TO MEET THE ULTIMATE DESIGN WIND SPEED (VULT) OF 142 MPH IN 3 SECOND GUSTS AS REQUIRED FOR RISK CATEGORY III STRUCTURES PER SECTION 1609.3 AND TABLE 1609.3.1 OF THE 2021 IBC WITH CITY OF HOUSTON AMENDMENTS.
6. ADDITIONAL DETAILS CAN BE FOUND ON SUBSEQUENT SHEETS.
7. APPROVED FABRICATORS – THE PLATFORM(S), STAIRS, BUILDING(S), AND ALL APPURTENANCES REQUIRE A CITY OF HOUSTON APPROVED FABRICATOR. A LIST OF APPROVED FABRICATORS CAN BE DOWNLOADED AT HTTPS://WWW.HOUSTONPERMITTINGCENTER.ORG/MEDIA/2146/DOWNLOAD. FOR INFORMATION ABOUT THE APPROVED FABRICATORS PROGRAM, PLEASE CONTACT 832-394-9043 OR MAHER.KHANSA@HOUSTONTX.GOV.

NO.	DATE	REVISION	APP.

IDS Engineering Group
13430 NW. Freeway, Suite 700
Houston, Tx. 77040
713.462.3178
TxEng Firm 2726 | TxSurv Firm 10110700

SURVEYED BY: KUO & ASSOCIATES, INC.
TBPE FIRM #F-4578; TBPLS FIRM #1007560

THIS DOCUMENT IS RELEASED FOR THE PURPOSE OF REVIEW UNDER THE AUTHORITY OF MARCEL KHOUW, P.E. 101807 ON 05/27/2026. IT IS NOT TO BE USED FOR CONSTRUCTION PURPOSES.

CITY OF HOUSTON
HOUSTON PUBLIC WORKS

LIFT STATION RENEWAL AND REPLACEMENT FY 2023

LOCKWOOD LIFT STATION WALKING PLATFORM LAYOUT

WBS NUMBER	FOR CITY OF HOUSTON USE ONLY
R-000267-0179-4	
DRAWING SCALE	
HORIZ: N.T.S. VERT: N/A	
CITY OF HOUSTON PM	
NAWARAJ PANTA, P.E.	

DWG. NO.	SHEET NO.
LCK-A-02	SHEET NO. 28 OF 361

PLOTTED: 5/13/2026 6:22 PM

FILE PATH: \\idseg.com\FS\Projects\0000\005708500 CoH Lift Stations - FY 2023\CAD\DWG\PRODUCTION\29-LOCKWOOD ELEVATED PLATFORM.dwg

NO.	DATE	REVISION	APP.

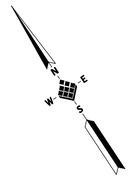

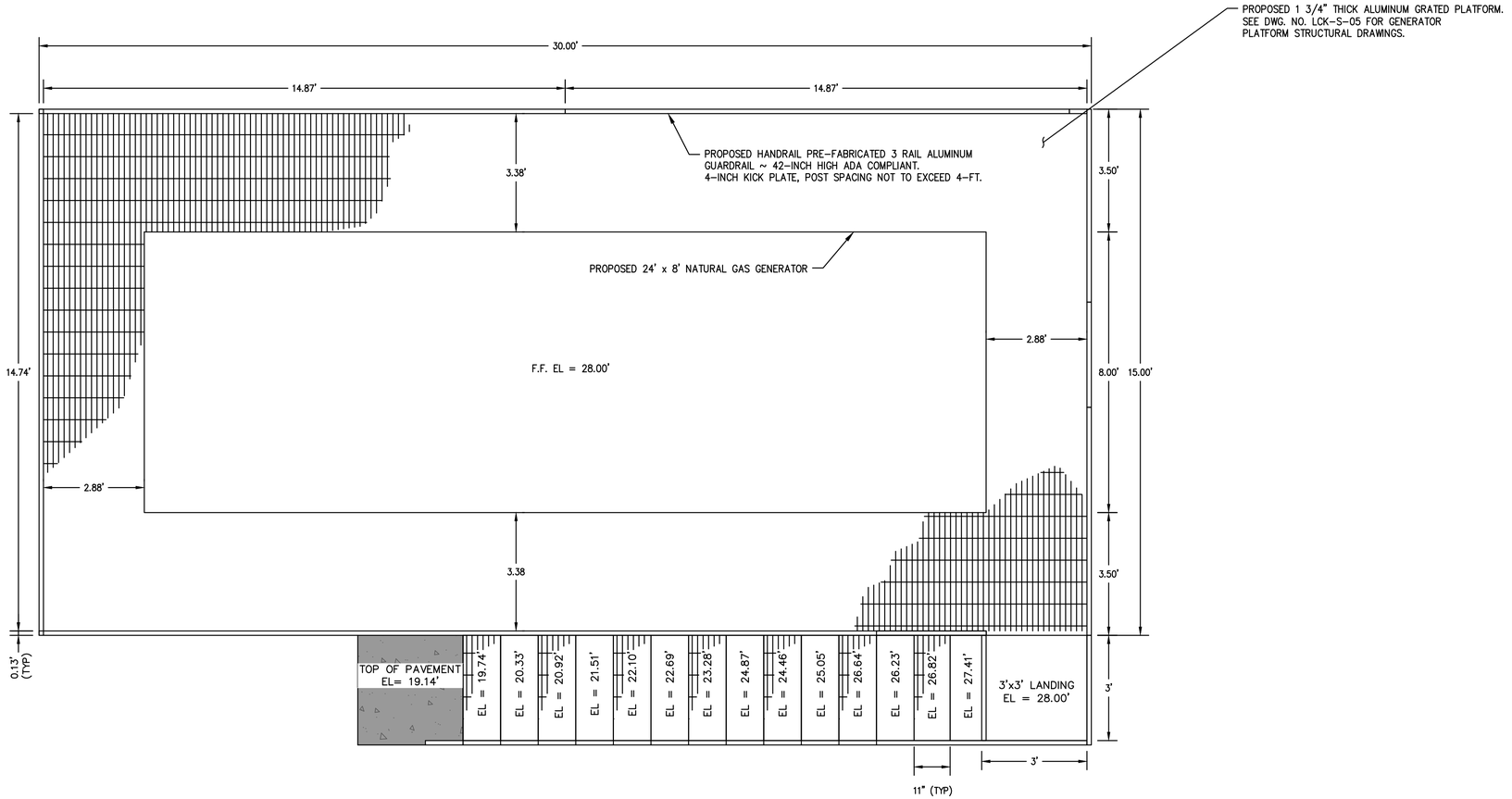

NOTES:

1. CONTRACTOR TO SUBMIT SHOP DRAWINGS FOR PLATFORM, BUILDING, STAIRCASE, HANDRAIL, AND GUARDRAIL SIGNED AND SEALED BY A PROFESSIONAL ENGINEER LICENSED IN THE STATE OF TEXAS FOR APPROVAL TO ENGINEER OF RECORD PRIOR TO PROCUREMENT AND INSTALLATION OF ABOVE STRUCTURAL ELEMENTS.
2. PLATFORM SHOULD BE DESIGNED TO WITHSTAND LOADS FROM A 500-YEAR EVENT, BASED ON THE FEMA WSEL FOR A 500-YR FLOOD EVENT.
3. PLATFORM GRATING WILL BE 1 3/4" ALUMINUM POWDER COATED FOREST GREEN.
4. PLATFORM SHALL BE DESIGNED TO MEET THE ULTIMATE DESIGN WIND SPEED (VULT) OF 139 MPH IN 3 SECOND GUSTS AS REQUIRED FOR RISK CATEGORY II STRUCTURES PER SECTION 1609.3 AND TABLE 1609.3.1 OF THE 2012 IBC WITH CITY OF HOUSTON AMENDMENTS.
5. GENERATOR TO BE USED SOLEY FOR EMERGENCIES AND REQUIRED TESTING AND SHALL COMPLY WITH CHAPTER 30 OF THE CITY OF HOUSTON CODE OF ORDINANCES SOUND LEVEL EXEMPTION FOR EMERGENCY WORK.
6. CONTRACTOR TO VERIFY PLATFORM SIZE PER SELECTED MANUFACTURERS RECOMMENDATION AND PROVIDE ADEQUATE ACCESS TO EQUIPMENT.

IDS Engineering Group
13430 NW. Freeway, Suite 700
Houston, Tx. 77040
713.462.3178
TxEng Firm 2726 | TxSurv Firm 10110700

SURVEYED BY: KUO & ASSOCIATES, INC.
TBPE FIRM #F-4578; TBPLS FIRM #1007560

THIS DOCUMENT IS RELEASED FOR THE PURPOSE OF REVIEW UNDER THE AUTHORITY OF MARCEL KHOUW, P.E. 101807 ON 05/27/2026. IT IS NOT TO BE USED FOR CONSTRUCTION PURPOSES.

CITY OF HOUSTON
HOUSTON PUBLIC WORKS

LIFT STATION RENEWAL AND REPLACEMENT FY 2023

LOCKWOOD LIFT STATION ELEVATED GENERATOR PLATFORM

WBS NUMBER	FOR CITY OF HOUSTON USE ONLY
R-000267-0179-4	
DRAWING SCALE	
HORIZ: 1" = 2' VERT: N/A	
CITY OF HOUSTON PM	
NAWARAJ PANTA, P.E.	

DWG. NO.	SHEET NO.
LCK-A-03	29 OF 361

PLOTTED: 5/13/2026 6:22 PM

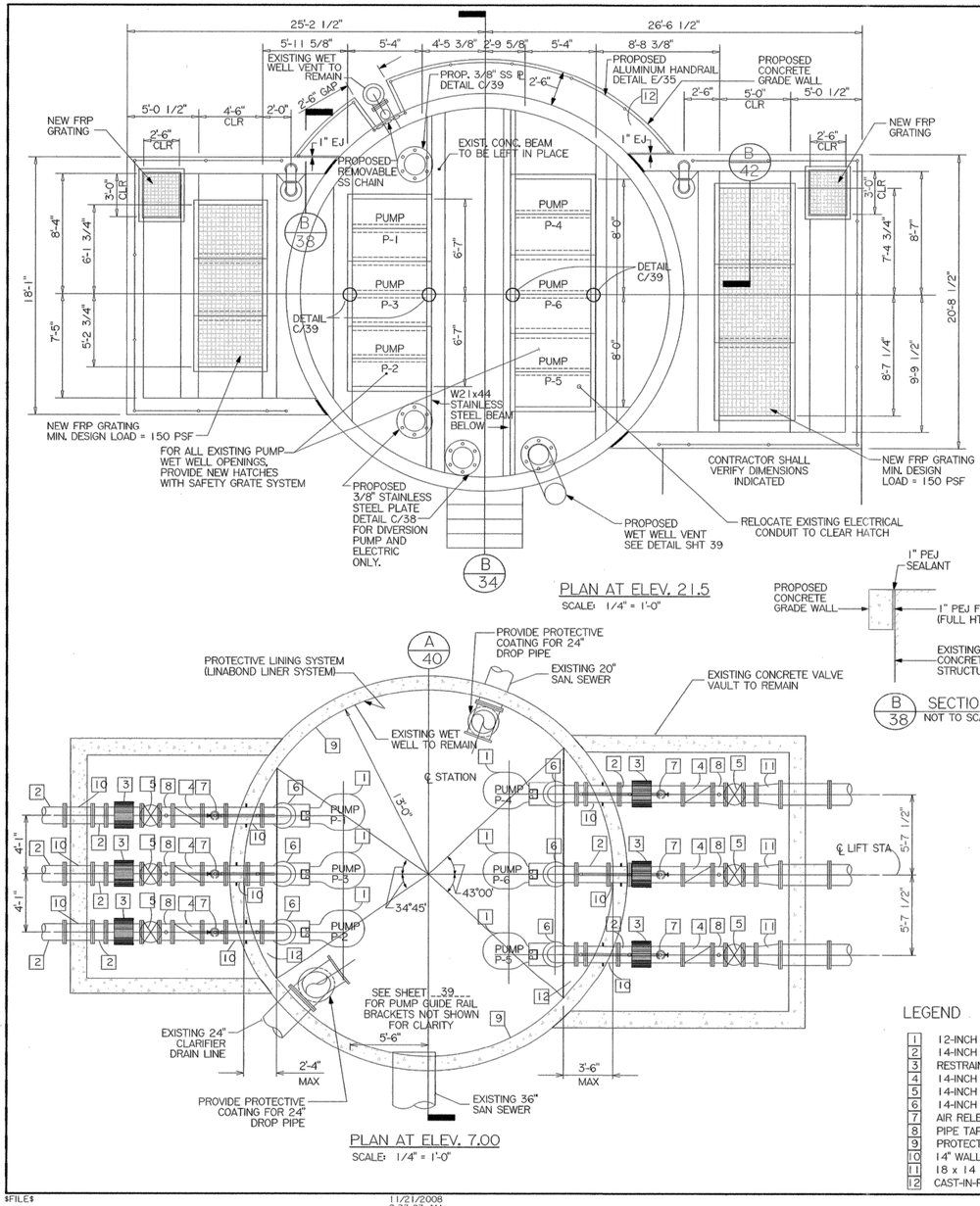

PLAN AT ELEV. 21.5
SCALE: 1/4" = 1'-0"

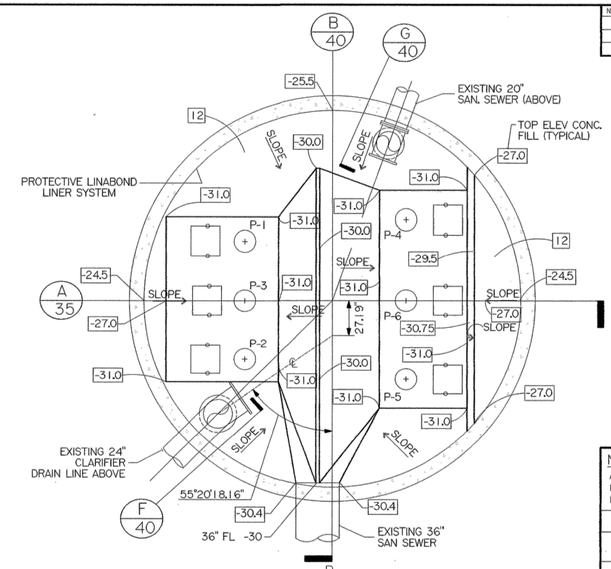

PLAN AT BASE OF WET WELL (ELEV-32.5)
SCALE: 1/4" = 1'-0"

PLAN AT ELEV. 7.00
SCALE: 1/4" = 1'-0"

SECTION
NOT TO SCALE

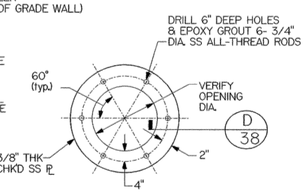

DETAIL
NOT TO SCALE

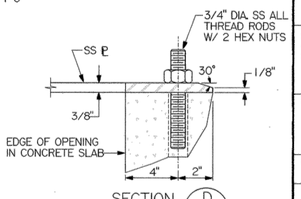

SECTION
NOT TO SCALE

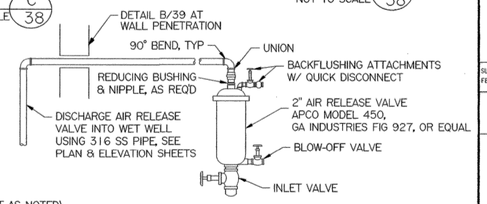

TYPICAL AIR RELEASE VALVE ASSY

DETAIL A 38
NOT TO SCALE

LEGEND (ALL NEW ITEMS EXCEPT AS NOTED)

1	12-INCH SUBMERSIBLE PUMPS
2	14-INCH FLANGED DISCHARGE PIPE
3	RESTRAINED FLANGED COUPLING ADAPTOR
4	14-INCH CHECK VALVE
5	14-INCH PLUG VALVE
6	14-INCH SR DI FLANGED 90° BEND
7	AIR RELEASE VALVE ASSEMBLY
8	PIPE TAP FOR PRESSURE GAGE
9	PROTECTIVE LINING (CONCRETE)
10	14" WALL PIPE
11	18 x 14 DI CONCENTRIC FLANGED REDUCER
12	CAST-IN-PLACE CONCRETE

No.	Date	Revisions	App.

AS BUILT

NOTICE:
AT LEAST 48 HOURS BEFORE EXCAVATING IN STREET R.O.W. OR EASEMENTS CALL THE LONE STAR NOTIFICATION (713)223-4567

PRIVATE UTILITY LINES SHOWN

N/A DATE

CENTERPOINT ENERGY/ELECTRIC FACILITES (APPROVED ONLY FOR CROSSING UNDERGROUND DUCTLINES, UNLESS OTHERWISE NOTED) VALID AT TIME OF REVIEW ONLY.

DATE

SBC APPROVED FOR UNDERGROUND CONDUIT FACILITIES ONLY SIGNATURE VALID FOR ONE YEAR

N/A DATE

CENTERPOINT ENERGY/GAS FACILITIES (GAS SERVICE LINES ARE NOT SHOWN)

DATE

CABLE

DEMPELIS & TERGESON ASSOCIATES, INC.
CONSULTING ENGINEERS
2100 North Loop West, Suite 305
Houston, Texas 77018-8013
Phone (713) 783-7117
Fax (713) 783-5431

SURVEYED BY: AMANI Engineering, Inc.
FB NO. P-5448

STATE OF TEXAS
CHRIS DEMPELIS
9163
REGISTERED PROFESSIONAL ENGINEER
11/21/2008

CITY OF HOUSTON
DEPARTMENT OF PUBLIC WORKS AND ENGINEERING

LOCKWOOD LIFT STATION REHABILITATION

LIFT STATION PLANS

WBS NO.	R-000267-00B3-4
DRAWING SCALE	AS NOTED
CITY OF HOUSTON S.E.	
IRAJ RANJBAR, P.E.	
SHEET NO.	38 OF 76

PUBLIC WORKS AND ENGINEERING
ACCEPTED FOR FILING
45601
CITY NUMBER
HOUSTON, TEXAS

IDS Engineering Group
13430 NW. Freeway, Suite 700
Houston, Tx. 77040
713.462.3178
TxEng Firm 2726 | TxSurv Firm 10110700

SURVEYED BY: KUO & ASSOCIATES, INC.
TBPE FIRM #F-4578; TBPLS FIRM #1007560

THIS DOCUMENT IS RELEASED FOR THE PURPOSE OF REVIEW UNDER THE AUTHORITY OF MARCEL KHOUW, P.E. 101807 ON 05/27/2026. IT IS NOT TO BE USED FOR CONSTRUCTION PURPOSES.

CITY OF HOUSTON
HOUSTON PUBLIC WORKS

LIFT STATION RENEWAL AND REPLACEMENT FY 2023

EXISTING LIFT STATION RECORD DRAWING (SHEET 1 OF 2)

WBS NUMBER	FOR CITY OF HOUSTON USE ONLY
R-000267-0179-4	
DRAWING SCALE	
HORIZ: N/A VERT: N/A	
CITY OF HOUSTON PM	
NAWARAJ PANTA, P.E.	
SHEET NO. 30 OF 361	

DWG. NO.
LCK-C-13

FOR REFERENCE ONLY

NO.	DATE	REVISION	APP.

FILE PATH: \\idseg.com\FS\Projects\0000\005708500 CoH Lift Stations - FY 2023\CAD\DWG\PRODUCTION\30-LOCKWOOD RECORD DWG.dwg

$FILE$
11/21/2008
8:33:03 AM

PLOTTED: 5/13/2026 6:22 PM

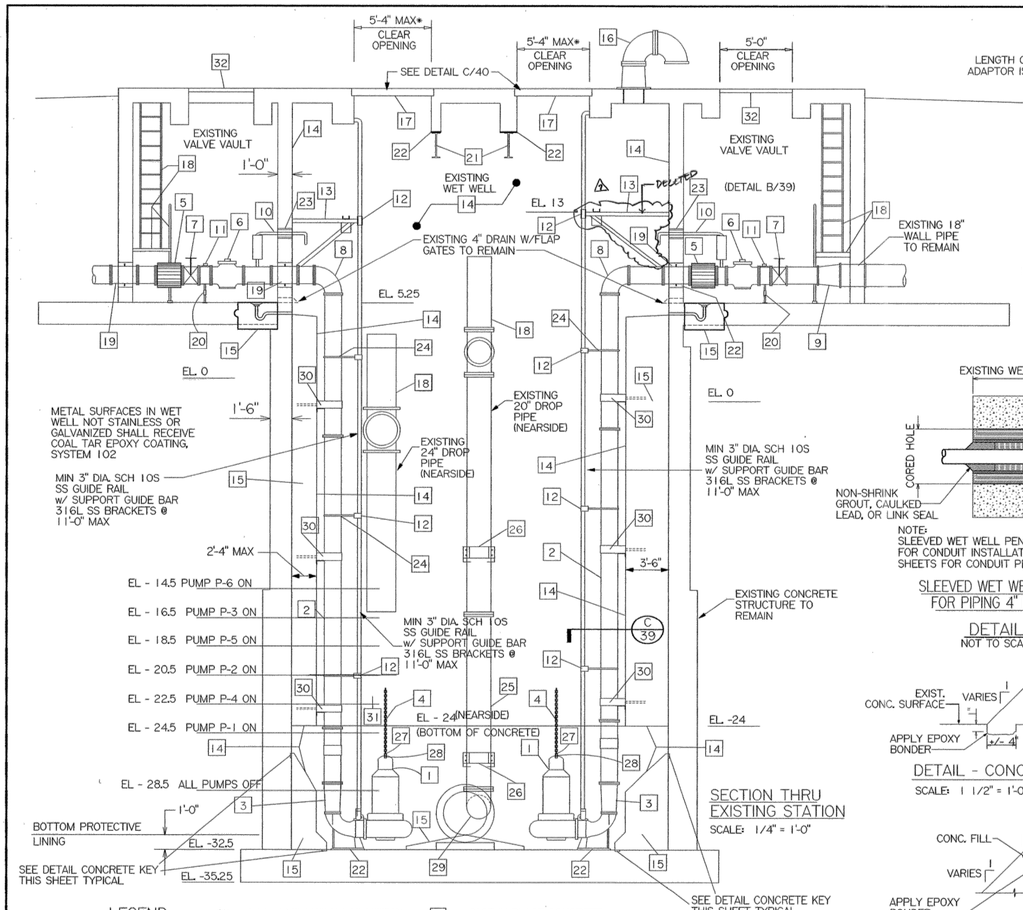

SECTION THRU EXISTING STATION

SCALE: 1/4" = 1'-0"

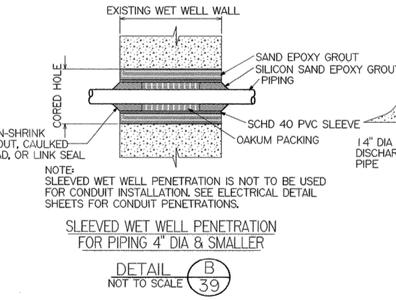

NOTE:
SLEEVED WET WELL PENETRATION IS NOT TO BE USED FOR CONDUIT INSTALLATION. SEE ELECTRICAL DETAIL SHEETS FOR CONDUIT PENETRATIONS.

SLEEVED WET WELL PENETRATION FOR PIPING 4" DIA & SMALLER

DETAIL B/39 — NOT TO SCALE

DETAIL - CONCRETE KEY AT SLAB

SCALE: 1 1/2" = 1'-0"

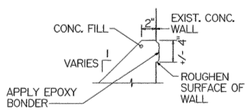

DETAIL - CONCRETE KEY AT WALL

SCALE: 1 1/2" = 1'-0"

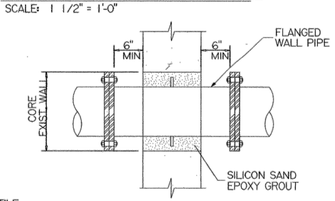

DETAIL - WET WELL WALL PENETRATION

FOR PIPING GREATER THAN 4" DIAMETER

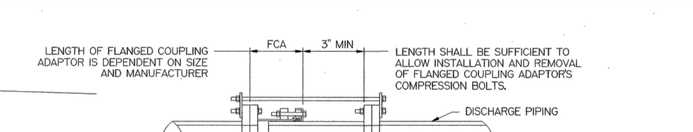

TYPICAL FLANGED COUPLING ADAPTOR RESTRAINT DETAIL

DETAIL A/39 — NOT TO SCALE

FLANGED COUPLING ADAPTOR NOTES:

1. PROVIDE A NUMBER OF TIE RODS EQUAL TO 1/2 THE NUMBER OF FLANGE BOLTS. EVENLY SPACE INSTALLATION OF TIE RODS. DIAMETER OF TIE RODS TO BE EQUAL TO THE DIAMETER OF FLANGE BOLTS. LENGTH OF TIE RODS TO BE DETERMINED BY CONTRACTOR BASED ON SIZE AND MANUFACTURER OF FLANGED COUPLING ADAPTOR AND FINAL LENGTH OF SPOOL PIECE.
2. PROVIDE 316 SS TAB FOR ATTACHMENT OF TIE RODS. SIZE TO BE DETERMINED BY CONTRACTOR.
3. CONTRACTOR TO SUBMIT DETAILS DURING SHOP DRAWING SUBMISSION.
4. ALL HARDWARE SHALL BE 316 STAINLESS STEEL. TIE RODS SHALL BE THREADED.
5. THIS RESTRAINT DOES NOT REPLACE THRUST BLOCKS TO BE PROVIDED AT OTHER LOCATIONS.

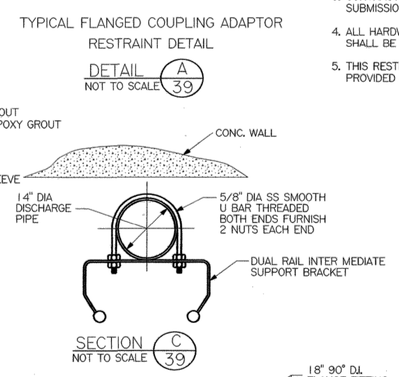

SECTION C/39 — NOT TO SCALE

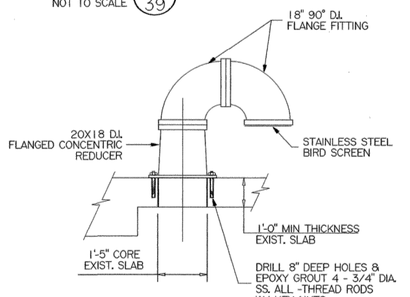

SECTION

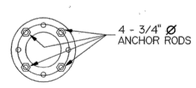

PLAN AT BASE

DETAIL WET WELL VENT

SCALE: 1/2" = 1'-0"

LEGEND (ALL NEW ITEMS EXCEPT AS NOTED)

1	12-INCH SUBMERSIBLE PUMPS (6 REQUIRED)
2	14-INCH DJ FLANGED DISCHARGE PIPE
3	14 x 12 DJ ECC FLANGED REDUCER
4	1/2" DIA. MIN 316 STAINLESS STEEL LIFTING CHAIN *
5	RESTRAINED FLANGED COUPLING ADAPTOR
6	14-INCH CHECK VALVE
7	14-INCH PLUG VALVE
8	14-INCH SR DI FLANGED 90° BEND
9	18 x 14 DJ CONC FLANGED REDUCER
10	AIR RELEASE VALVE ASSEMBLY
11	PIPE TAP FOR PRESSURE GAGE
12	PUMP GUIDE RAIL BRACKET
13	DISCHARGE PIPING SUPPORT BRACKET
14	PROTECTIVE LINING SYSTEM (CONCRETE) (LINABOND LINER SYSTEM)
15	CAST-IN-PLACE CONCRETE
16	18-INCH WET WELL VENT ASSEMBLY
17	HATCHES WITH SAFETY GRATING SYSTEM
18	PROTECTIVE COATING (METAL)
19	14-INCH WALL CASTING
20	ADJUSTABLE PIPE SUPPORT
21	W21 x 44 STAINLESS STEEL BEAM — DELETED
22	EPOXY GROUT
23	SLEEVED WET WELL PENETRATION
24	5/8" DIA SS U-BOLT, THREADED BOTH ENDS
25	EXTEND EXISTING 20" DROP PIPE
26	DROP PIPE CLAMP ASSEMBLY
27	1/2" MIN. 316 SS FORGED HAMMERLOCK *
28	1/2" MIN. 316 SS BOLT CHAIN SHACKLE *
29	20-INCH SR DI FLANGED 45° BEND
30	PIPE CLAMP ASSEMBLY
31	CONCRETE BAFFLE
32	FRP GRATING

* VERIFY CHAIN, HAMMERLOCK, AND SHACKLE SIZE WITH PUMP MANUFACTURER AND FINISH PROOF LOAD TO ENGINEER

NOTE:
SEE ELECTRICAL DRAWING E15 FOR SUBMERSIBLE TRANSDUCER DETAIL AND TRANSMITTER GUIDE BRACKET DETAIL.

NOTE:
INTERNAL LINING FOR STEEL OR DUCTILE IRON FORCE MAIN AND STATION DISCHARGE PIPING SHALL BE PROTECTO 401 CERAMIC LINING BY INDURON, OR EQUAL, TO NOMINAL THICKNESS OF 40 MILS.

No.	Date	Revisions	App.
7	9.17.14	DELETED W21 x 44 STAINLESS STEEL BEAM	

AS BUILT

NOTICE:
AT LEAST 48 HOURS BEFORE EXCAVATING IN STREET R.O.W. OR EASEMENTS CALL THE LONE STAR NOTIFICATION (713)223-4567

PRIVATE UTILITY LINES SHOWN

N/A DATE

CENTERPOINT ENERGY/ELECTRIC FACILITES (APPROVED ONLY FOR CROSSING UNDERGROUND DUCTLINES, UNLESS OTHERWISE NOTED) VALID AT TIME OF REVIEW ONLY.

DATE

SBC APPROVED FOR UNDERGROUND CONDUIT FACILITIES ONLY SIGNATURE VALID FOR ONE YEAR

N/A DATE

CENTERPOINT ENERGY/GAS FACILITIES (GAS SERVICE LINES ARE NOT SHOWN)

DATE

CABLE

DEMOPULOS & FERGUSON ASSOCIATES, INC. CONSULTING ENGINEERS
2180 North Loop West, Suite 305 Houston, Texas 77018-8013 Phone (713) 783-7117 Fax (713) 783-5433

SURVEYED BY: AMANI Engineering, Inc. FB NO. P-5448

CHRIS DEMOPULOS 9163 REGISTERED PROFESSIONAL ENGINEER 11/21/2008

CITY OF HOUSTON
DEPARTMENT OF PUBLIC WORKS AND ENGINEERING

LOCKWOOD LIFT STATION REHABILITATION

LIFT STATION SECTION AND DETAILS

WBS NO.	R-000267-00B3-4
DRAWING SCALE	AS NOTED
CITY OF HOUSTON S.E.	IRAJ RANJBAR, P.E.
SHEET NO.	39 OF 76

ACCEPTED PUBLIC WORKS AND ENGINEERING 45601 HOUSTON, TEXAS

IDS Engineering Group
13430 NW. Freeway, Suite 700
Houston, Tx. 77040
713.462.3178
TxEng Firm 2726 | TxSurv Firm 10110700

SURVEYED BY: KUO & ASSOCIATES, INC.
TBPE FIRM #F-4578; TBPLS FIRM #1007560

THIS DOCUMENT IS RELEASED FOR THE PURPOSE OF REVIEW UNDER THE AUTHORITY OF MARCEL KHOUW, P.E. 101807 ON 05/27/2026. IT IS NOT TO BE USED FOR CONSTRUCTION PURPOSES.

CITY OF HOUSTON
HOUSTON PUBLIC WORKS

LIFT STATION RENEWAL AND REPLACEMENT FY 2023

EXISTING LIFT STATION RECORD DRAWING (SHEET 2 OF 2)

WBS NUMBER	R-000267-0179-4
DRAWING SCALE	HORIZ: N/A VERT: N/A
CITY OF HOUSTON PM	NAWARAJ PANTA, P.E.
DWG. NO.	LCK-C-14
SHEET NO.	31 OF 361

FOR CITY OF HOUSTON USE ONLY

NO.	DATE	REVISION	APP.

FOR REFERENCE ONLY

FILE PATH: \\idseg.com\FS\Projects\0000\005708500 CoH Lift Stations - FY 2023\CAD\DWG\PRODUCTION\31-LOCKWOOD RECORD DWG.dwg

PLOTTED: 5/21/2019 1:28 PM
FILE PATH: G:\COMMERCIAL PROJECTS\24137 - Lift Station Rehab & Construction\STRUCTURAL\JV_DWGS\XREF\24137-TBlock.dwg

NO.	DATE	REVISION	APP.

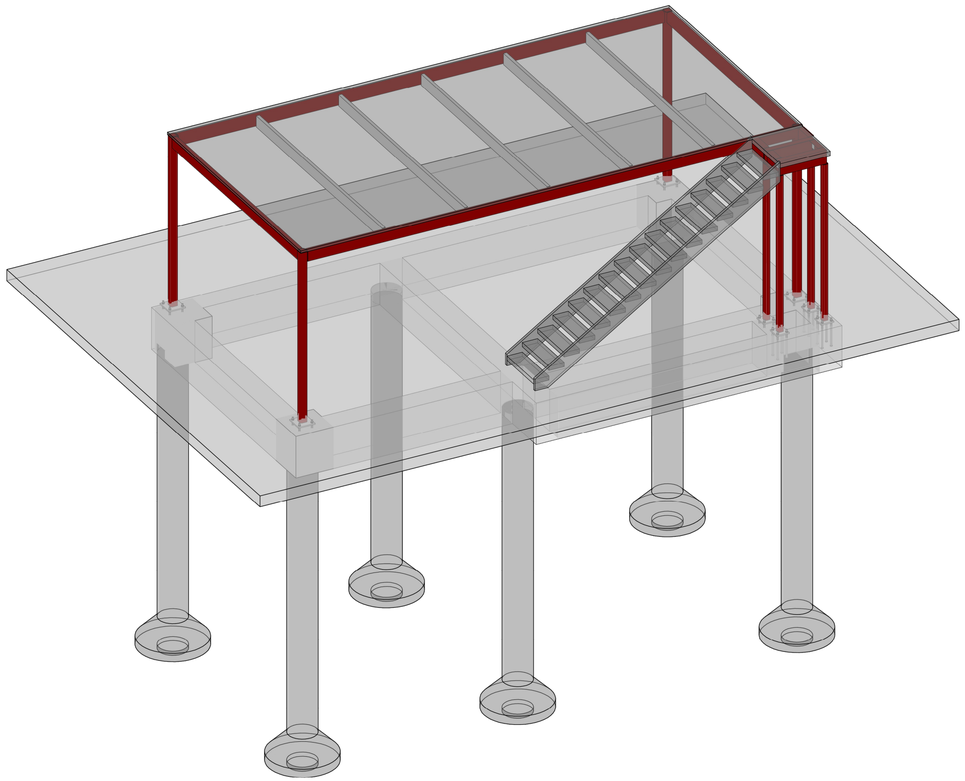

1 NATURAL GAS GENERATOR

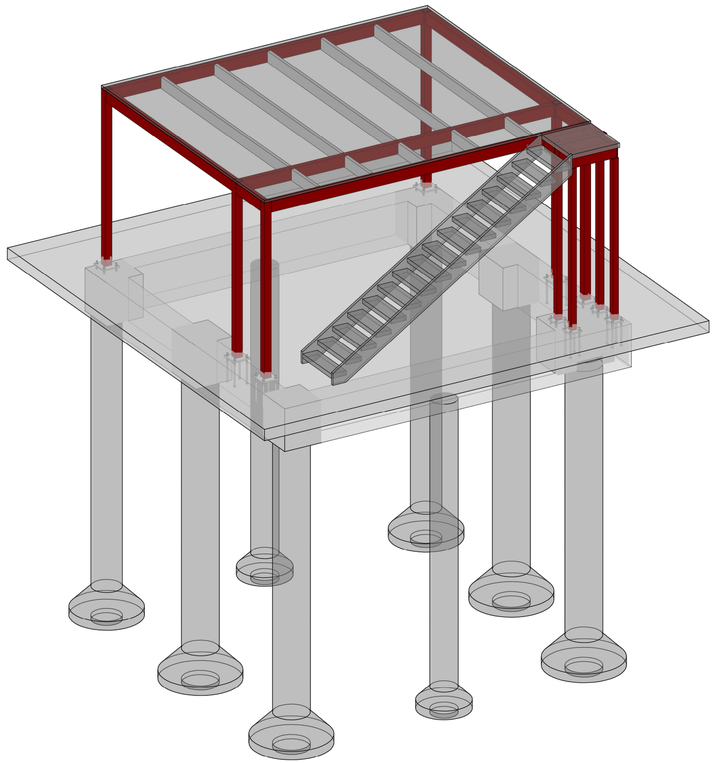

2 ELECTRICAL CONTROL BUILDING

IDS Engineering Group
13430 NW. Freeway, Suite 700
Houston, Tx. 77040
713.462.3178
TxEng Firm 2726 / TxSurv Firm 10110700

CONCEPT ENGINEERS
TX. FIRM REGISTRATION # F-04417
Structures for the whole community

PRELIMINARY
NOT FOR CONSTRUCTION, BIDDING, OR PERMIT PURPOSES.
FOR REVIEW ONLY.
DAVID MOORE
TEXAS LICENSE NO. 139405
Date: 05/08/26

CITY OF HOUSTON
DEPARTMENT OF PUBLIC WORKS AND ENGINEERING

LIFT STATION RENEWAL AND REPLACEMENT FY 2023

LOCKWOOD LIFT STATION 3D MODEL

WBS NUMBER	FOR CITY OF HOUSTON USE ONLY
R-000267-0179-3	
DRAWING SCALE	
AS NOTED	
CITY OF HOUSTONPM	
NAWARAJ PANTA, P.E.	
SHEET NO. 32 OF 361	

DWG. NO. LCK-S-01

IDS JOB No. 0057-085-00

DESIGN CRITERIA

1. DESIGN CODE INTERNATIONAL BUILDING CODE 2021 WITH CITY OF HOUSTON AMENDMENTS
2. DESIGN LOADS:
   A. LIVE LOADS: (PSF)DEAD LOADS

SLABS OF GRADE	100 PSF	GENERATOR WEIGHT	21,000 LBS
STORAGE & MECHANICAL	150 PSF	ELECTRICAL BUILDING WEIGHT	XX LBS

   B. DEAD LOADS (SUPERIMPOSED)

SLABS OF GRADE	15 PSF
STORAGE & MECHANICAL	15 PSF

	UNIFORM LOADS	CONCENTRATED LOADS
STAIRS & EXISTING WAY	100 PSF	300 LBS
HANDRAILS & GUARD RAILS	50 LB/FT	200 LBS

3. WIND SPEED 147 MPH 3 SEC. GUST (ULTIMATE)
   EXPOSURE CATEGORY "C"
   RISK CATEGORY III

DESIGN WIND FORCE ON GAS GENERATOR PLATFORM XX LBS
DESIGN WIND FORCE ON ELECTRICAL CONTROL BUILDING XX LBS

GENERAL NOTES

1. THE CONTRACTOR SHALL COMPARE THE STRUCTURAL DRAWINGS WITH THE ARCHITECTURAL, CIVIL, PLUMBING, MECHANICAL AND ELECTRICAL DRAWINGS AS TO LAYOUT DIMENSIONS AND ELEVATIONS. ALL DISCREPANCIES, IF ANY ARE FOUND, SHALL BE REPORTED TO THE ARCHITECT FOR PROPER ADJUSTMENT BEFORE PROCEEDING WITH WORK. ANY DISCREPANCIES WITH THE STRUCTURAL DOCUMENTS SHALL BE IMMEDIATELY BROUGHT TO THE ATTENTION OF THE ARCHITECT/ENGINEER PRIOR TO THE SUBMISSION OF BIDS OF PROPOSALS, BEFORE COMMENCING THE WORK IN QUESTION. NO FIELD CHANGES OR DEVIATIONS FROM THE DESIGN ARE TO BE MADE WITHOUT PRIOR WRITTEN APPROVAL OF THE ARCHITECT AND/OR STRUCTURAL ENGINEER. NO CHANGE ORDER CONSIDERATION WILL BE GIVEN TO CHANGES FOR WHICH THE ARCHITECT AND/OR ENGINEER WERE NOT CONTACTED PRIOR TO CONSTRUCTION OF THE AFFECTED ITEM.
2. IN THE EVENT THAT CERTAIN FEATURES OF THE CONSTRUCTION ARE NOT FULLY SHOWN IN THE DRAWING OR CALLED OUT IN THE STRUCTURAL NOTES OR IN THE SPECIFICATIONS, THEN SUCH CONSTRUCTION SHALL BE IN THE SAME CHARACTER FOR SIMILAR CONDITIONS THAT ARE SHOWN OR CALLED FOR.
3. SEE ARCHITECTURAL DRAWINGS FOR FLOOR ELEVATIONS, SLOPE, AND THE LOCATION OF DEPRESSED FLOOR AREAS, AND OTHER REQUIREMENTS AT COLUMNS, WALLS, STAIRWELLS, SLABS, ETC. THE CONTRACTOR SHALL COMPARE THE STRUCTURAL SECTIONS WITH THE ARCHITECTURAL SECTIONS AND REPORT ANY DISCREPANCY TO THE ARCHITECT PRIOR TO FABRICATING OR INSTALLING STRUCTURAL MEMBERS.
4. PRINCIPAL OPENINGS THROUGH THE FRAMING ARE SHOWN ON DRAWINGS. THE CONTRACTOR SHALL EXAMINE THE ARCHITECTURAL AND MECHANICAL DRAWINGS FOR THE REQUIRED OPENINGS AS HE SHALL PROVIDE FOR ALL OPENINGS WHETHER SHOWN ON THE DRAWINGS OR NOT AND SHALL VERIFY SIZE AND LOCATION OF ALL OPENINGS WITH THE MECHANICAL CONTRACTOR. ANY DEVIATION FROM THE OPENINGS SHOWN ON THE STRUCTURAL DRAWINGS SHALL BE BROUGHT TO THE ENGINEER'S ATTENTION FOR APPROVAL.
5. REFER TO THE SPECIFICATIONS PROVIDED WITH THIS SUBMITTAL FOR THE REQUIRED STRUCTURAL SUBMITTALS THAT MUST BE SUBMITTED FOR E.O.R. REVIEW.
6. SPECIFICATIONS ARE PART OF THE CONSTRUCTION DOCUMENTS AND MUST BE USED IN CONJUNCTION WITH THE DRAWINGS.
7. DETAILS LABELED "TYPICAL DETAILS" ON DRAWINGS APPLY TO SITUATIONS OCCURRING ON THE PROJECT THAT ARE THE SAME OR SIMILAR TO THOSE SPECIFICALLY DETAILED. SUCH DETAILS APPLY WHETHER OR NOT THEY ARE REFERENCED AT EACH LOCATION. NOTIFY E.O.R. OF CONFLICTS REGARDING APPLICABILITY OF "TYPICAL DETAILS".
8. DO NOT LOAD THE SLAB ON GRADE WITH ERECTION CRANES OR ERECTION EQUIPMENT. THE SLAB HAS NOT BEEN DESIGNED FOR CRANE LOADS AND WILL REQUIRE AN INCREASE OF THICKNESS AND/OR REINFORCEMENT. OBTAIN E.O.R. APPROVAL ON PROPOSED CRANE SUPPORT PLAN FOR SLABS PRIOR TO COMMENCING WORK.
9. DO NOT STORE OR STACK CONSTRUCTION MATERIALS ON POURED OR ERECTED FLOOR/ROOFS IN EXCESS OF 80 PERCENT OF LIVE LOAD. CONTRACTOR SHALL ENSURE THAT ALL SUB-CONTRACTORS ARE INFORMED OF LOAD RESTRICTIONS. AVOID IMPACT WHEN PLACING MATERIALS OF POURED OR ERECTED SLABS FLOOR OR ROOF.
10. THE CONTRACT STRUCTURAL DOCUMENTS REPRESENT THE FINISHED STRUCTURE. THE CONTRACTOR IS RESPONSIBLE FOR THE MEANS OR METHODS OF CONSTRUCTION, PROVIDE ALL MEASURES REQUIRED TO PROTECT THE STRUCTURE, WORKMEN AND OTHER PERSONS DURING CONSTRUCTION; INCLUDING SHORING FOR CONSTRUCTION EQUIPMENT, SHORING FOR THE BUILDING, FORMS AND SCAFFOLDING, SHORING FOR THE RETAINING WALLS AND OTHER TEMPORARY SUPPORTS REQUIRED.
11. ALL STAIR MEMBERS INCLUDING, BUT NOT LIMITED TO, STRINGERS AND HANDRAILS SHALL BE DESIGNED BY STAIR ENGINEER AND STEEL FABRICATOR.
12. SHOP DRAWINGS AND OTHER ITEMS SHALL BE SUBMITTED TO THE ENGINEER FOR REVIEW PRIOR TO FABRICATION. ALL SHOP DRAWINGS SHALL BE REVIEWED BY THE GENERAL CONTRACTOR BEFORE SUBMITTAL. THE ENGINEER'S REVIEW IS TO BE FOR CONFORMANCE WITH THE DESIGN CONCEPT AND GENERAL COMPLIANCE WITH THE RELEVANT CONTRACT DOCUMENTS. THE ENGINEER'S REVIEW DOES NOT RELIEVE THE CONTRACTOR OF THE SOLE RESPONSIBILITY TO REVIEW, CHECK AND COORDINATE THE SHOP DRAWINGS PRIOR TO SUBMISSION. THE CONTRACTOR REMAINS SOLELY RESPONSIBLE FOR ERRORS AND OMISSIONS ASSOCIATED WITH THE PREPARATION OF SHOP DRAWINGS AS THEY PERTAIN TO MEMBER SIZES, DETAILS, DIMENSIONS, ETC.
13. SHOP DRAWINGS SHALL BE PREPARED WITH SUFFICIENT DETAIL AND NOTATION FOR FIELD ERECTION AND INSTALLATION. PHOTO COPIES OF THE CONTRACT DRAWINGS FOR USE AS SHOP DRAWINGS WILL NOT BE PERMITTED.

FOUNDATION NOTES

1. THE FOUNDATION SYSTEM HAS BEEN DESIGNED BASED ON THE RECOMMENDATIONS SPECIFIED IN THE GEOTECHNICAL INVESTIGATION REPORT NUMBER HGT2210460.1.1(A) BY HVJ ASSOCIATES, INC., DATED 03/31/2026. THE FOUNDATION SYSTEM FOR THE ELEVATED GENERATOR PLATFORM AND ELEVATED ELECTRICAL CONTROL BUILDING CONSISTS OF DRILLED-AND-UNDERREAMED PIERS WITH INTERCONNECTED GRADE BEAMS AND REINFORCED CONCRETE SLAB/PAD ELEMENTS AS SHOWN ON PLAN. DRILLED-AND-UNDERREAMED PIERS HAVE BEEN DESIGNED USING AN ALLOWABLE NET BEARING CAPACITY OF 6,000 PSF FOR TOTAL LOADS AND 4,500 PSF FOR DEAD PLUS SUSTAINED LIVE LOADS AT A MINIMUM BEARING DEPTH OF 18 FEET BELOW EXISTING GRADE, UNLESS NOTED OTHERWISE ON PLAN. REFER TO PLAN AND DETAILS FOR SHAFT DIAMETER, BELL DIAMETER, REINFORCEMENT, AND TOTAL DEPTH BELOW EXISTING GRADE. CONTRACTOR SHALL PROVIDE CASING, DEWATERING, AND/OR OTHER TEMPORARY SUPPORT METHODS AS REQUIRED TO MAINTAIN STABILITY OF DRILLED PIER EXCAVATIONS. CONCRETE SHALL BE PLACED IN THE DRILLED HOLES WITHIN FOUR HOURS OF EXCAVATION TO REDUCE THE RISK OF GROUNDWATER SEEPAGE, DETERIORATION OF THE FOUNDATION BEARING SURFACE, AND UNDERREAM COLLAPSE. REFER TO THE GEOTECHNICAL REPORT FOR ADDITIONAL FOUNDATION, EXCAVATION, GROUNDWATER, AND CONSTRUCTION RECOMMENDATIONS.
2. THE CONTRACTOR MUST OBTAIN A COPY OF THE GEOTECHNICAL REPORT DESCRIBED ABOVE AND FOLLOW ALL RECOMMENDATIONS IN REGARDS TO SOIL PREPARATION, COMPACTION, REMOVAL AND FILL REQUIREMENTS AS NECESSARY TO ACHIEVE THE DESIGN SOIL BEARING PRESSURE CAPACITY IF REQUIRED.
3. IN GENERAL SITE PREPARATION SHOULD CONSIST OF REMOVING ANY EXISTING FOUNDATIONS, PAVED AREAS, GRASS, TREE ROOTS, AND STRIPPING ORGANIC TOP SOILS. THE EXPOSED SUBGRADE SHOULD BE PROOF-ROLLED TO DETECT LOCAL WEAK AREAS WHICH SHOULD BE EXCAVATED, PROCESSED, AND RECOMPACTED IN LOOSE LIFTS OF APPROXIMATELY EIGHT-INCH THICKNESS. IN FLOOR SLAB, SUBGRADE SOILS SHOULD BE COMPACTED TO A MINIMUM OF 95% OR THE PROCTOR MAXIMUM DRY DENSITY (ASTM D698) AT A MOISTURE CONTENT WITHIN -1% TO +3% OF MAXIMUM MOISTURE. TREE STUMPS, IF PRESENT, SHOULD BE REMOVED BELOW FLOOR SLAB OR PAVEMENT GRADE, AND REMOVE 2 FEET OF EXISTING SOIL AND REPLACE WITH SELECTED FILL AS PER CITY OF HOUSTON STANDARD CONSTRUCTION SPECIFICATIONS. REFER TO GEOTECHNICAL REPORT.
4. SEE CIVIL DRAWINGS FOR ALL EXTERIOR SLABS AND CURBS AND LIMITS OF EXCAVATION.
5. DURING THE PLACEMENT AND FINISHING OF SLAB, USE FOGGING OR MISTING EQUIPMENT TO APPLY MOISTURE TO THE SLAB AREAS UNTIL FINAL CURING HAS BEGUN TO AVOID EXCESSIVELY RAPID EVAPORATION OF WATER FROM THE SLAB. DO NOT USE SPRAY WATER BOTTLES THAT APPLY LARGE AMOUNTS OF WATER THE SLAB SURFACE
6. FOR ALL REINFORCED CONCRETE FOUNDATION MEMBERS, CONTRACTOR SHALL FOLLOW ALL THE APPLICABLE ITEMS ON THE "REINFORCED CONCRETE NOTES:".
7. PROTECT PIPES AND CONDUITS RUNNING THROUGH WALLS AND SLABS WITH 1/2" EXPANSION MATERIAL.
8. DO NOT PLACE FOOTINGS OR SLABS AGAINST SUBGRADE CONTAINING FREE WATER.
9. MAINTAIN PROPER SITE DRAINAGE DURING CONSTRUCTION TO ENSURE SURFACE RUNOFF AWAY FROM STRUCTURES AND TO PREVENT PONDING OF SURFACE RUNOFF NEAR THE STRUCTURES.
10. KEEP OPEN EXCAVATIONS AROUND BUILDING DRY, BACKFILL AGAINST FOUNDATIONS AND GRADE BEAMS AS SOON AS PRACTICAL. PUMP WATER OUT OF OPEN EXCAVATIONS OF FLOODING PRIOR TO BACKFILLING.

REINFORCED CONCRETE NOTES

1. DETAILING OF CONCRETE REINFORCEMENT AND ACCESSORIES SHALL BE IN ACCORDANCE WITH ACI PUBLICATION 315, LATEST EDITION.
2. CONCRETE REINFORCING SHALL CONFORM TO THE REQUIREMENTS OF ASTM A-615, GRADE 60. WELDED WIRE FABRIC SHALL BE IN ACCORDANCE WITH ASTM A-185.
3. CONCRETE IN ALL AREAS SHALL HAVE SAND AND GRAVEL AGGREGATE CEMENT CONFORMING TO ASTM C 150, TYPE I, AND DESIGNATED COMPRESSIVE STRENGTH (f'c) AT 28 DAYS AS CALLED OUT IN NOTE #4 BELOW. ALSO SEE PROJECT SPECIFICATIONS FOR DIFFERENT AGGREGATE AND COMPRESSIVE STRENGTH REQUIREMENTS.
4. UNLESS NOTED OTHERWISE, CONCRETE SHALL MEET OR EXCEED THE MINIMUM COMPRESSIVE STRENGTH REQUIREMENTS AT 28 DAYS:
   A. CONCRETE DESIGN STRENGTH:
      a. GRADE BEAMS & SLABS ON GRADE: f'c = 4,000 PSI
      b. PIER CAPS, WALLS, STAIRS & ANY OTHER NOT NOTED: f'c = 4,000 PSI
      c. PIERS: f'c = 4,000 PSI
   B. CONCRETE COVER REINFORCEMENT COVER SHALL MEET THE FOLLOWING REQUIREMENTS (UNLESS SPECIFICALLY OTHERWISE IN PLANS):
      a. SLAB ON GRADE 1" TOP
      b. GRADE BEAMS 1 1/2" TOP, 3" BOTTOM, 2" SIDES
      c. DRILLED PIERS 3" ALL SURFACES
      d. COLUMNS 1 1/2" ALL SURFACES
   (SEE SECTION 20.6 ACI 318-19 FOR CONDITIONS NOT NOTED.
5. FLY ASH MAY BE USED TO REPLACE A PORTION OF THE PORTLAND CEMENT, THE RATIO OF FLY ASH TO THE TOTAL OF THE FLY ASH AND CEMENT IN A MIX SHALL NOT EXCEED 20%. FLY ASH SHALL CONFORM TO ASTM C618, TYPE C OR F.
6. IT SHALL BE THE RESPONSIBILITY OF THE CONTRACTOR TO COORDINATE WITH THE CONCRETE SUPPLIER TO ENSURE A PUMPABLE AND WORKABLE MIX. TESTING LAB WILL CONTROL SLUMP AND ONLY TESTING LAB CAN ADD WATER ON JOB SITE. CONCRETE SUPPLIER WILL INFORM TESTING LAB/CONTRACTOR OF MAXIMUM WATER ALLOWABLE THAT CAN BE ADDED ON JOB SITE BEFORE W/C RATIO IS EXCEEDED. THE USE OF PLASTICIZERS, RETARDANTS AND OTHER ADDITIVES SHALL BE AT THE OPTION OF THE CONTRACTOR SUBJECT TO THE APPROVAL OF THE STRUCTURAL ENGINEER. FOLLOW THE RECOMMENDATIONS OF THE MANUFACTURER FOR THE PROPER USE OF ADDITIVES. THE USE OF CALCIUM CHLORIDE OR OTHER CHLORIDE BEARING SALTS SHALL NOT BE PERMITTED.
7. CONCRETE SLUMP TESTS SHALL BE MADE BEFORE AND AFTER THE ADDITION OF ADMIXTURES AND MAY BE TAKEN AT THE BACK OF THE TRUCK. CONCRETE FOR THE PREPARATION OF TEST CYLINDERS SHALL BE TAKEN FROM THE HOSE END FOR CONCRETE PLACED BY PUMP.
8. ALL REINFORCING STEEL SHALL BE LAPPED PER THE LATEST EDITION OF THE ACI-318-19. SPLICES, CORNERS AND INTERSECTIONS WITH STANDARD 90 DEGREE BEND OR CORNER BARS. LAP TOP BARS AT CENTER OF SPAN. LAP WELDED WIRE MESH ONE FULL MESH AT SIDE AND END LAPS. DO NOT LAP OR WELD REINFORCEMENT IN THE FIELD UNLESS SPECIFICALLY SHOWN ON STRUCTURAL DRAWINGS OR APPROVED BY E.O.R. WHEN SPECIFICALLY APPROVED, PROVIDE WELDED REINFORCEMENT IN ACCORDANCE WITH ASTM A706. USE LOW HYDROGEN ELECTRODES FOR WELDING OF REINFORCEMENT IN CONFORMANCE WITH "WELDING STEEL, METAL INSERTS AND CONNECTIONS IN REINFORCED CONCRETE CONSTRUCTION" AMERICAN WELDING SOCIETY AWS D1.4 WHERE REQUIRED, PROVIDE DOWELS TO MATCH SIZE AND SPACING OF MAIN REINFORCING.
9. REFER TO ARCHITECTURAL, MECHANICAL, ELECTRICAL AND PLUMBING DRAWINGS FOR ANY OTHER ADDITIONAL SLEEVES, ANCHORS, VENT OPENINGS, ETC., NOT SHOWN ON STRUCTURAL PLANS THAT MIGHT BE REQUIRED.
10. PLACE CONCRETE IN A MANNER SO AS TO PREVENT SEGREGATION OF THE MIX. DELAY FLOATING AND TROWELLING OPERATIONS UNTIL CONCRETE HAS LOST SURFACE WATER SHEEN OR ALL FREE WATER. DO NOT SPRINKLE FREE CEMENT ON THE SLAB SURFACE. FINISHING OF SLAB SURFACES SHALL COMPLY WITH THE RECOMMENDATIONS OF AC1 302.1 AND 304.
11. UNLESS NOTED OTHERWISE ON PLAN, CONTROL JOINTS IN SLAB ON GRADE TO BE LOCATED APPROXIMATELY 225 SQ. FT. GRIDS. ACTUAL LOCATION TO BE DETERMINED BY OWNER OR CONTRACTOR.
12. PROVIDE 7 DAY CURING OF SLAB IMMEDIATELY AFTER FINISHING, USING ONE OF THE FOLLOWING METHODS
   A. CONTINUOUSLY WATERED BURLAP
   B. WATERPROOF MEMBRANES
13. PROTECT THE CONCRETE SURFACE BETWEEN FINISHING OPERATIONS ON HOT, DRY WINDY DAYS OR ANY OTHER TIME THAT PLASTIC SHRINKAGE CRACKS COULD DEVELOP BY USING WET BURLAP, PLASTIC MEMBRANE OR FOGGING. PROTECT CONCRETE SLAB AT ALL TIMES FROM RAIN, HAIL OR OTHER INJURIOUS EFFECTS.
14. UNLESS SPECIFIED CONCRETE MUST REACH THE FOLLOWING PERCENTAGES OF ITS 28-DAY COMPRESSIVE STRENGTH (F'c), BEFORE FORMS MAY BE REMOVED. 40% WALLS, COLUMNS & BEAM SIDES, 70% JOISTS, PANS & BEAM BOTTOMS (IF RESHORED), 85% SHORING FOR FLOOR SYSTEMS (IF NOT SHORED)
15. AN INDEPENDENT CERTIFIED TESTING LABORATORY SHALL VERIFY AND PROVIDE REPORTS CERTIFYING THE FOLLOWING:
   A. CONCRETE PLANT BATCH TICKETS FOR EACH TRUCK TO VERIFY THAT THE CONCRETE MATCHES THE APPROVED DESIGN MIX.
   B. CONCRETE SLUMP IS IN ACCORDANCE WITH APPROVED DESIGN MIX.
   C. CONCRETE PLACEMENT PREPARATIONS ARE IN ACCORDANCE WITH ACI SPECIFICATIONS.
   D. CONTROL / CONTRACTION JOINTS ARE INSTALLED WITHIN THE ACI TIME ALLOWANCE.
   E. PROPER CURING METHODS ARE BEING UTILIZED.
16. NO CONCRETE SHALL BE PLACED OUTSIDE OF THESE SPECIFICATIONS WITHOUT THE ENGINEER'S APPROVAL, ANY ITEMS NOT IN COMPLIANCE WITH THE OUTLINED SPECIFICATION SHALL BE REPORTED TO THE ARCHITECT AND STRUCTURAL ENGINEER WITHIN 24 HOURS.
17. REFER TO ARCHITECTURAL DRAWINGS FOR WATER PROOFING REQUIREMENTS.
18. UNLESS OTHERWISE NOTED ALL VERTICAL REINFORCEMENT ON COLUMNS SHALL BE SPLICED A MINIMUM OF 36 BAR DIAMETERS.
19. THE SHORES FOR THE FLOOR SLAB & BEAMS SHALL BE ADEQUATE TO CARRY THE TOTAL WEIGHT OF THE SLAB SYSTEM TO THE GROUND, ALL SHORING / RESHORING DESIGN SHALL BE THE RESPONSIBILITY OF THE CONTRACTOR.
20. THERE SHALL BE NO HORIZONTAL CONSTRUCTION JOINTS IN CONCRETE POURS. ALL CONSTRUCTION JOINTS SHALL BE MADE IN THE MIDDLE OF THE SPAN. WHEN A BEAM INTERSECTS A GIRDER AT MIDDLE 1/3 OF SPAN, THE JOINTS SHALL BE OFFSET DISTANCE EQUAL TO TWICE THE WIDTH OF THE BEAM. THE LOCATION OF CONSTRUCTION JOINTS SHALL BE APPROVED BY THE STRUCTURAL ENGINEER. ADDITIONAL REINFORCING AT CONSTRUCTION JOINTS SHALL BE SPECIFIED BY THE BEGINNER, SEE TYPICAL DETAIL. PROVIDE 75 FEET MAXIMUM SPACING OF CONSTRUCTION JOINTS IN GRADE BEAMS.
21. THE MAXIMUM WATER TO CEMENT RATIO: 0.50 (MAX) FOR NON-AIR ENTRAINED. AND 0.48 (MAX) FOR AIR ENTRAINED.
22. MAX. AGGREGATE SIZE 3/4 INCH.
23. PROVIDE BAR SUPPORT ACCESSORIES IN ACCORDANCE WITH THE LATEST ACI MANUAL, STANDARD PRACTICE FOR DETAILING REINFORCED CONCRETE STRUCTURES, SUPPORT BEAM REINFORCING ON BEAMS BOLSTERS SPACED NOT MORE THAN 4 FEET ON CENTER.
24. PROVIDE BAR SUPPORTS WITH PLASTIC COATED LEGS OR HOT DIP GALVANIZING AFTER FABRICATION FOR CONCRETE EXPOSED TO VIEW. PROVIDE STAINLESS STEEL BAR SUPPORTS FOR CONCRETE TO RECEIVE A SAND BLAST FINISH.
25. FOR PIPE INSTALLED HORIZONTALLY WITHIN THE SLAB, PROVIDE MAXIMUMS OUTSIDE DIAMETER OF 30% OF SLAB THICKNESS. PLACE CONDUIT OR PIPE BETWEEN THE TOP AND BOTTOM LAYER OF REINFORCEMENT WITH THE CENTER THIRD OF SLAB, DO NOT SPACE CONDUITS OF PIPES CLOSER THAN THREE DIAMETERS OF WIDTHS ON CENTER.
26. CONTRACTOR AND SUPPLIER TO COORDINATE ADDITIONAL ADMIXTURES AND SUBMIT MIX DESIGNS AS REQUIRED FOR MASS CONCRETE. AFTER COMPLETION OF THE EQUIPMENT FOUNDATION, THE CONCRETE SHALL BE INSPECTED AND ALL CRACKS FROM SHRINKAGE AND CONSTRUCTION STRESS SHALL BE REPAIRED.

REINFORCED CONCRETE NOTES CONTINUED

TENSION DEVELOPMENT LENGTH ('ld')

BAR SIZE	f'c= 3000 PSI		f'c= 4000 PSI		f'c= 5000 PSI		f'c= 6000 PSI		f'c= 7000 PSI		f'c= 8000 PSI		f'c= 10000 PSI	
	ld TOP	ld BOT	ld TOP	ld BOT	ld TOP	ld BOT	ld TOP	ld BOT	ld TOP	ld BOT	ld TOP	ld BOT	ld TOP	ld BOT
#3	1'-9"	1'-4"	1'-6"	1'-2"	1'-5"	1'-1"	1'-3"	1'-0"	1'-2"	1'-0"	1'-1"	1'-0"	1'-0"	1'-0"
#4	2'-4"	1'-10"	2'-1"	1'-7"	1'-10"	1'5"	1'-8"	1'-3"	1'-7"	1'-2"	1'-5"	1'-1"	1"-4"	1'-0"
#5	3'-0"	2'-3"	2'-7"	2'-0"	2'-4"	1'9"	2'-1"	1'-7"	2'-0"	1'-6"	1'-10"	1'-5"	1'-8"	1'-3"
#6	3'-7"	2'-9"	3'-11"	2'-4"	2'-9"	2'-1"	2'-6"	1'-11"	2'-4"	1'-10"	2'-2"	1'-8"	1'-11"	1'-6"
#7	5'-2"	4'-0"	4'-5"	3'-6"	4'-0"	3'-1"	3'-8"	2'-10"	3'-5"	2'-8"	3'-2"	2'-5"	2'-10"	2'-2"
#8	5'-11"	4'-7"	5'-2"	3'-11"	4'-7"	3'-6"	4'-2"	3'-3"	4'-0"	3'-1"	3'-8"	2'-10"	3'-3"	2'-6"
#9	6'-8"	5'-2"	5'-9"	4'-5"	5'-2"	4'-0"	4'-9"	3'-8"	4'-5"	3'-5"	4'-1"	3'-2"	3'-8"	2'-10"
#10	7'-6"	5'-10"	6'-6"	5'-0"	5'-10"	4'-6"	5'-4"	4'-1"	5'-0"	3'-10"	4-7"	3'-7"	4'-2"	3'-2"
#11	8'-4"	6'-5"	7'-3"	5'-7"	6'-6"	5'-0"	5'-11"	4'-7"	5'-6"	4'-3"	5'-1"	3'-11"	4'-5"	3'-6"

NOTES:
1. TABULATED VALUES ARE APPLICABLE ONLY IF CLEAR SPACING OF BARS BEING DEVELOPED OR SPLICED IS NOT LESS THAN 'db', CLEAR COVER IS NOT LESS THAN 'db' AND STIRRUPS OR TIES THROUGHOUT 'ld' IS NOT LESS THAN CODE MINIMUM, OR CLEAR SPACING OF BARS BEING DEVELOPED OR SPLICED IS NOT LESS THAN 2" 'db' AND CLEAR COVER IS NOT LESS THAN 'db'. FOR OTHER CASES , MULTIPLY TABULATED VALUES BY 1.5.
2. 'TOP' BARS ARE HORIZONTAL REBARS WITH MORE THAN 12 IN OF FRESH CONCRETE CAST BELOW THE BARS AT THE DEVELOPMENT LENGTH.
3. FOR LIGHT WEIGHT CONCRETE MULTIPLY THE TABULATED VALUES BY 1.3.
4. FOR EPOXY COATED BARS, MULTIPLY THE TABULATED VALUES BY 1.5 FOR 'BOT' BARS, OR BY 1.3. FOR TOP BARS.
5. FOR REINFORCEMENT OTHER THAN GRADE 60, MODIFY THE TABULATED VALUES BY THE RATIO OF THE REINFORCEMENT YIELD STRENGTH DIVIDED BY 60 KSI.

TENSION LAP SPLICES-CLASS B- TOP & BOT BARS

BAR SIZE	f'c= 3000 PSI		f'c= 4000 PSI		f'c= 5000 PSI		f'c= 6000 PSI		f'c= 7000 PSI		f'c= 8000 PSI		f'c= 10000 PSI	
	TOP	BOT	TOP	BOT	TOP	BOT	TOP	BOT	TOP	BOT	TOP	BOT	TOP	BOT
#3	2'-4"	1'-9"	2'-0"	1'-6"	1'-10"	1'-5"	1'-8"	1'-4"	1'-7"	1'-4"	1'-5"	1'-4"	1'-3"	1'-0"
#4	3'-1"	2'-4"	2'-8"	2'-1"	2'-5"	1'-10"	2'-2"	1'-8"	2'-1"	1'-7"	1'-11"	1'-5"	1'-8"	1'-7"
#5	3'-10"	3'-0"	3'-4"	2'-7"	3'-0"	2'-4"	2'-9"	2'-1"	2'-7"	2'-0"	2'-4"	1'-10"	2'-1"	1'-8"
#6	4'-8"	3'-7"	4'-0"	3'-1"	3'-7"	2'-9"	3'-3"	2'-8"	2'-11"	2'-4"	2'-10"	2'-2"	2'-6"	1'-11"
#7	6'-9"	5'-2"	5'-10"	4'-6"	5'-3"	4'-0"	4'-9"	3'-8"	4'-6"	3'-5"	4'-2"	3'-2"	3'-8"	2'-10"
#8	7'-9"	5'-11"	6'-8"	5'-2"	6'-0"	4'-7"	5'-5"	4'-2"	5'-1"	3'-11"	4'-9"	3'-8"	4'-3"	3'-3"
#9	8'-8"	6'-8"	7'-6"	5'-2"	6'-9"	5'-2"	6'-2"	4'-9"	5'-9"	4'-5"	5'-4"	4'-1"	4'-9"	3'-8"
#10	9'-10"	7'-6"	8'-6"	5'-9"	7'-7"	5'-10"	6'-11"	5'-4"	6'-6"	5'-0"	6'-0"	4'-7"	5'-4"	4'-2"
#11	10'-11"	8'-4"	9'-5"	7'-3"	8'-5"	6'-6"	7'-8"	5'-11"	7'-2"	5'-6"	6'-8"	5'-1"	5'-11"	4'-5"

NOTES:
1. TABULATED VALUES ARE APPLICABLE ONLY IF CLEAR SPACING OF BARS BEING DEVELOPED OR SPLICED IS NOT LESS THAN 'db', CLEAR COVER IS NOT LESS THAN 'db' AND STIRRUPS OR TIES THROUGHOUT 'ld' IS NOT LESS THAN CODE MINIMUM, OR CLEAR SPACING OF BARS BEING DEVELOPED OR SPLICED IS NOT LESS THAN 2" 'db' AND CLEAR COVER IS NOT LESS THAN 'db'. FOR OTHER CASES , MULTIPLY TABULATED VALUES BY 1.5.
2. 'TOP' BARS ARE HORIZONTAL REBARS WITH MORE THAN 12 IN OF FRESH CONCRETE CAST BELOW THE BARS AT THE DEVELOPMENT LENGTH.
3. FOR LIGHT WEIGHT CONCRETE MULTIPLY THE TABULATED VALUES BY 1.3.
4. FOR EPOXY COATED BARS, MULTIPLY THE TABULATED VALUES BY 1.5 FOR 'BOT' BARS, OR BY 1.3. FOR TOP BARS.
5. FOR REINFORCEMENT OTHER THAN GRADE 60, MODIFY THE TABULATED VALUES BY THE RATIO OF THE REINFORCEMENT YIELD STRENGTH DIVIDED BY 60 KSI.
6. FOR CLASS 'A' SPLICE USE SAME AS TENSION DEVELOPMENT LENGTH.

"Ldh" TENSION DEPELOPMENT (EMBEDMENT) LENGTH FOR STANDARD END HOOKS (GRADE 60 BARS - NORMAL WEIGHT CONCRETE - GENERAL USE)

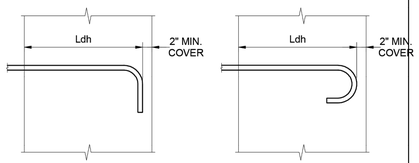

STANDARD 90 HOOK SIDE COVER > 21/2" — STANDARD 180 HOOK SIDE COVER > 21/2"

BAR SIZE	fc=3000 psi Ldh	fc=4000 psi Ldh	fc=5000 psi Ldh	fc=6000 psi Ldh
# 3	9"	7"	7"	6"
# 4	11"	10"	9"	8"
# 5	1'-2"	1'-0"	11"	10"
# 5	1'-5"	1'-3"	1'-1"	1'-0"
# 6	1'-7"	1'-5"	1'-3"	1'-2"
# 7	1'-10"	1'-7"	1'-5"	1'-4"
# 8	2'-1"	1'-10"	1'-7"	1'-6"
# 9	2'-4"	2'-0"	1'-10"	1'-8"
# 10	2'-8"	2'-2"	2'-0"	1'-10"

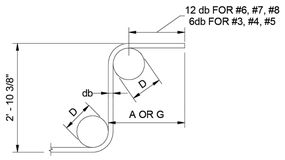

90 DEG HOOK

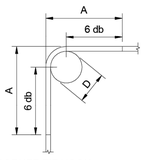

CORNER TIE HOOK

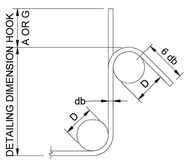

135 DEG HOOK

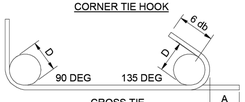

CROSS TIE

STIRRUP & TIE HOOK TYPES

BAR SIZE	D (IN.)	90 DEG HOOK A OR G (IN.)	135 DEG HOOK A OR G (IN.)
#3	1 1/2	4	4
#4	2	4 1/2	4 1/2
#5	2 1/2	6	5 1/2

NO.	DATE	REVISION	APP.

IDS Engineering Group
13430 NW. Freeway, Suite 700
Houston, Tx. 77040
713.462.3178
TxEng Firm 2726 / TxSurv Firm 10110700

CONCEPT ENGINEERS
TX. FIRM REGISTRATION # F-04417
Structures for the whole community

PRELIMINARY
NOT FOR CONSTRUCTION, BIDDING, OR PERMIT PURPOSES.
FOR REVIEW ONLY.
DAVID MOORE
TEXAS LICENSE NO. 139405

Date: 05/08/26

CITY OF HOUSTON
DEPARTMENT OF PUBLIC WORKS AND ENGINEERING

LIFT STATION RENEWAL AND REPLACEMENT FY 2023

LOCKWOOD LIFT STATION
GENERAL NOTES
(SHEET 1 OF 3)

WBS NUMBER	FOR CITY OF HOUSTON USE ONLY
R-000267-0179-3	
DRAWING SCALE	
AS NOTED	
CITY OF HOUSTONPM	
NAWARAJ PANTA, P.E.	
DWG. NO. LCK-S-02	SHEET NO. 33 OF 361

IDS JOB No. 0057-085-00

PLOTTED: 5/21/2019 1:28 PM
FILE PATH: G:\COMMERCIAL PROJECTS\24137 - Lift Station Rehab & Construction\STRUCTURAL\JV_DWGS\XREFs\24137-TBlock.dwg

PLOTTED: 5/21/2019 1:28 PM

STRUCTURAL STEEL NOTES

1. ALL STRUCTURAL STEEL MEMBERS SHALL CONFORM TO THE FOLLOWING DESIGNATION

W SHAPES	ASTM A992	(50KSI)
SQUARE RECTANGULAR TUBES	ASTM A500 GR. C	(50 KSI)
ROUND TUBES (HSS)	ASTM A500 GR. C	(46 KSI)
STEEL PIPES	ASTM A53 GR. B	(35 KSI)
CHANNELS	ASTM A36	(36 KSI)
PLATES, ANGLES, MISC, STEEL	ASTM A36	(36 KSI)
ANCHOR RODS	ASTM F1554 GR.36	(36 KSI)
HARDENED STEEL WASHERS	ASTM F436	
HEAVY HEX NUTS	ASTM A563	
SEE NOTE 16		

2. ALL STRUCTURAL STEEL SHALL BE DETAILED FABRICATED AND ERECTED IN ACCORDANCE WITH A.I.S.C. STANDARDS 15th EDITION.

3. FOR ALL HIGH STRENGTH BOLTS, HARDENED WASHERS SHALL BE PROVIDED ON NUT SIDE OF BOLT FOR TORQUING AS REQUIRED.

4. ALL WELDING SHALL CONFORM TO STANDARD OF THE AMERICAN WELDING SOCIETY, AWS D1.1 LATEST EDITION STRUCTURAL WELDING CODE

5. E70 ELECTRODES FOR ALL FIELD AND SHOP WELDING SHALL CONFORM TO ANSI/AWS D1.1 LATEST EDITION UNLESS NOTED OTHERWISE ALL WELD SIZES SHALL BE PER AISC CODE. REFER TO NOTE 17 FOR ADDITIONAL INFORMATION.

6. SPLICING STRUCTURAL MEMBERS IS PROHIBITED WITHOUT PRIOR APPROVAL OF THE STRUCTURAL ENGINEER.

7. ANY TEMPORARY SHORING OR BRACING DURING THE CONSTRUCTION PHASE BEFORE COMPLETION OF CONNECTIONS IS THE RESPONSIBILITY OF THE CONTRACTOR.

8. IF NOT SHOWN ON THE DRAWINGS, SUPPORT OF METAL DECK AROUND COLUMN CLOSURE, SCREED PLATES AROUND THE OPENINGS AND EDGE OF SLAB SHALL BE PROVIDED BY THE CONTRACTOR.

9. ALL FIELD CONNECTIONS TO BOLTED WITH A325 BOLTS. BOLTS TO BE LEJEUNE TYPE OR EQUAL. PROVIDE MINIMUM OF TWO BOLTS PER CONNECTION, MINIMUM BOLT DIAMETER 3/4".

10. ALL EXPOSED STEEL SHALL BE HOT DIPPED GALVANIZED.

11. THE BEAM-TO-BEAM AND BEAM-TO-COLUMN SIMPLE SHEAR CONNECTIONS SHOULD DEVELOP THE END REACTION OF THE CONNECTED BEAM. THE END REACTION OF THE CONNECTED BEAM CAN BE OBTAINED FROM THE LOAD CARRYING CAPACITY OF THE BEAM ON THE BASIS OF EQUIVALENT UNIFORM LOADS GIVEN IN THE PART 3 OF AISC MANUAL LATEST EDITIONS (UNLESS LARGER REACTION IS SHOWN ON DRAWINGS). THE MINIMUM SHEARING CAPACITY OF 15 KIPS SHALL BE PROVIDED FOR ALL BEAMS. REFER TO NOTE 22 FOR COMPOSITE BEAM CONNECTION REQUIREMENTS.

12. THE DESIGN OF STRUCTURAL STEEL CONNECTIONS IS THE RESPONSIBILITY OF THE CONTRACTOR AND THE STEEL FABRICATOR. THE DESIGN OF STEEL CONNECTIONS SHALL BE PERFORMED BY A REGISTERED PROFESSIONAL ENGINEER, AND SHALL BE SUBMITTED TO THE ENGINEER OF RECORD FOR REVIEW.

13. STEEL BEAM BEARING ON MASONRY SHALL HAVE A MINIMUM OF 8" BEARING AND ANCHOR AS SHOWN ON THE DRAWINGS, MASONRY SHALL ALSO HAVE SOLID MASONRY OR FULLY GROUTED CELLS FROM STEEL BEARING TO GRADE BEAM BELOW.

14. UNLESS OTHERWISE NOTED, ALL MOMENT CONNECTIONS SHALL BE MADE WITH FULL PENETRATION WELD AND SHALL BE DESIGNED TO DEVELOP FULL CAPACITY OF THE MEMBER.

15. ANY MISCELLANEOUS STEEL NOT SHOWN ON THE PLANS, BUT REQUIRED DUE TO COORDINATION BETWEEN DIFFERENT DISCIPLINES SHALL BE INCLUDED BY THE CONTRACTOR IN THEIR BID.

16. CONNECTION MATERIALS
    a. BEAM, COLUMNS, STIFFENER PLATES AND DOUBLE PLATES TO MATCH GRADE STEEL OF STRUCTURAL ELEMENT
    b. ALL CONNECTION MATERIALS, EXCEPT AS OTHERWISE NOTED HEREIN OR IN THE DRAWINGS, INCLUDING BEARING PLATES, GUSSET PLATES, STIFFENER PLATES, ETC. ASTM A36

17. WELD MINIMUM SIZE & STRENGTH
    a. PROVIDE MINIMUM SIZE OF FILLET WELDS AS SPECIFIED IN TABLE J2,4 OF AISC MANUAL
    b. PROVIDE MINIMUM EFFECTIVE THROAT THICKNESS OF PARTIAL PENETRATION GROOVE WELDS AS SPECIFIED ON TABLE J2.3 OF AISC MANUAL
    c. DEVELOP THE FULL TENSILE STRENGTH OF THE MEMBER ELEMENT JOIN ON ALL SHOP AND FIELD WELDS U.N.O.
    d. WHERE CONNECTIONS ARE NOTED ON DRAWINGS AS MOMENT CONNECTIONS PROVIDE WELDS TO DEVELOP FULL FLEXURAL CAPACITY OF THE LESSER MEMBER.

18. PROVIDE BOLTS, NUTS AND WASHERS THAT ARE HOT DIPPED GALVANIZED ACCORDING TO ASTM A153, CLASS C WHEN USED TO CONNECT STEEL ELEMENTS THAT ARE HOT DIP GALVANIZED AFTER FABRICATION.

19. FABRICATE AND ASSEMBLE STRUCTURAL MEMBERS/ASSEMBLIES IN SHOP TO GREATEST EXTEND POSSIBLE.

20. IF CAMBER OF STRUCTURAL MEMBERS IS INDICATED ON THE DRAWINGS WHERE POSSIBLE, CAMBER OF BEAMS TO BE APPLIED BY COLD BEND PROCESS, CAMBER INDICATED IN THE DRAWINGS ARE INTENDED TO BE FINAL CAMBER AT THE TIME OF ERECTION, AND WITHIN TOLERANCE O MINUS ZERO TO PLUS 1/8" FOR EACH TEM FEET OF MEMBER LENGTH. ALL BEAMS SHALL BE INSTALLED SO THAT NATURAL OF SPECIFIC CAMBER IS ORIENTED UPWARDS.

21. CONTRACTOR SHALL BE RESPONSIBLE FOR ALL ERRORS OF DETAILING ON THE SHOP DRAWINGS, ERRORS IN FABRICATION, AND THE CORRECT FITTING OF STRUCTURAL STEEL MEMBERS.

22. FIELD MODIFICATION TO STRUCTURAL STEEL IS PROHIBITED WITHOUT PRIOR APPROVAL BY THE E.O.R.

23. CLEAN STEEL OF RUST, LOSE MILL SCALE AND OTHER FOREIGN MATERIALS WHERE REQUIRED FOR FABRICATION, FITTING UP. OR WELDING.

24. DO NOT CUT STRUCTURAL STEEL MEMBERS FOR THE WORK OF OTHER TRADES WITHOUT PRIOR REVIEW AND APPROVAL OF THE E.O.R.

25. AFTER FABRICATION, HOT DIP GALVANIZE STRUCTURAL STEEL AND THEIR CONNECTIONS PERMANENTLY EXPOSED TO THE OUTSIDE, SUCH ITEMS INCLUDE BUT ARE NOT LIMITED TO:

    1. SHELF ANGLES
    2. PARAPET WALL SUPPORTING MEMBERS
    3. SCREEN WALL SUPPORTING MEMBERS
    4. EMBEDDED PLATES IN CONCRETE
    5. BUILDING CLADDING SUPPORT STEEL.

26. EXAMINE THE ARCHITECTURAL AND STRUCTURAL DRAWINGS FOR OTHER ITEMS THAT REQUIRE HOT DIPPED GALVANIZATION

27. PROVIDE NON-SHRINK NON-METALLIC GROUT FOR BASE PLATES WITH MINIMUM 28 DAYS COMPRESSIVE STRENGTH OF 6000 PSI COMPLETE GROUT WORK BEFORE ROOF CONCENTRATED POURING OF A SINGLE STORY BUILDING.

28. STRUCTURAL STEEL CONNECTIONS NOT COMPLETELY DETAILED ON THE DRAWINGS, INCLUDING MATERIAL GRADE & SIZES, WELD SIZES AND NUMBER OF BOLTS SHALL BE DESIGNED BY THE CONTRACTOR UNDER SUPERVISION OF REGISTERED PROFESSIONAL ENGINEER WHO IS REGISTERED ON THE STATE OF TEXAS AN EMPLOYED BY STEEL FABRICATOR, DESIGN CALCULATIONS TO BE SEALED BY FABRICATOR'S REGISTERED PROFESSIONAL ENGINEER, SHOP DRAWINGS SUBMITTED WITHOUT COMPLETE DESIGN CALCULATIONS WILL NOT BE REVIEWED. WHERE PREDESIGNED CONNECTIONS ARE TAKEN DIRECTLY FROM TABLES IN AISC MANUAL. CALCULATIONS NEED TO BE SUBMITTED PROVIDED JOB DESIGN CONDITIONS PRECISELY MATCH THOSE ASSUMED IN THE AISC MANUAL.

29. FURNISH SHOP DRAWINGS FOR E.O.R.'S REVIEW PRIOR TO FABRICATION. INCLUDE WELDING PROCEDURES, TESTING PROGRAMS FOR WELDING AND HIGH STRENGTH BOLTING, COATING MATERIAL, AND ERECTION SEQUENCE IN SHOP DRAWINGS.

30. MILL STEEL COLUMNS ENDS TO FIT FLUSH WITH BASE PLATE, AND END PLATES, FIELD ASSEMBLY OF THESE STEEL ELEMENTS TO THE COLUMNS IS PROHIBITED.

31. PROVIDE HEADED STUDS (SHEAR AND ANCHOR) MADE OF MATERIAL CONFORMING TO AWS D1.1 CLAUSE 9.2.6.

32. PROVIDE DEFORMED ANCHORS MADE OF MATERIAL CONFORMING TO ASTM A1064.

33. WELD STUDS ACCORDING TO MANUFACTURER'S RECOMMENDATIONS. MANUAL ARC (STICK) WELDING OF HEADED STUDS AND/OR DEFORMED ANCHORS IS NOT ALLOWED.

34. PRIOR TO DECK PLACEMENT, VERIFY THAT STEEL BEAMS BEARING ON MASONRY HAVE 6" MINIMUM BEARING AND ARE ANCHORED S SHOWN ON DRAWINGS.

EXISTING CONSTRUCTION NOTES

1. BEFORE PROCEEDING WITH ANY WORK WITHIN THE EXISTING FACILITY, THE CONTRACTOR SHALL FAMILIARIZE HIMSELF WITH EXISTING STRUCTURAL AND OTHER CONDITIONS. IT SHALL BE THE CONTRACTOR'S RESPONSIBILITY TO PROVIDE ALL NECESSARY BRACING, SHORING, AND OTHER SAFEGUARDS TO MAINTAIN ALL PARTS OF THE EXISTING WORK IN A SAFE CONDITION DURING THE PROCESS OF CONSTRUCTION, AND TO PROTECT FROM DAMAGE THOSE PORTIONS OF THE EXISTING WORK WHICH ARE TO REMAIN.

2. THE CONTRACTOR SHALL FIELD VERIFY THE DIMENSIONS, ELEVATIONS, ETC. NECESSARY FOR THE PROPER CONSTRUCTION AND ALIGNMENT OF THE NEW PORTIONS OF THE WORK TO THE EXISTING WORK. THE CONTRACTOR SHALL MAKE ALL MEASUREMENTS NECESSARY FOR FABRICATION AND ERECTION OF STRUCTURAL MEMBERS. ANY DISCREPANCY SHALL BE IMMEDIATELY BROUGHT TO THE ATTENTION OF THE ENGINEER.

3. WELDING TO AND WITHIN AN EXISTING FACILITY PRESENTS POTENTIAL HAZARDS, INCLUDING:
    A. FIRE HAZARD DUE TO THE EXISTING CONSTRUCTION AND BUILDING CONTENTS.
    B. STRUCTURAL LIQUEFACTION DUE TO WELDING ACROSS THE FULL SECTION OF STRUCTURAL MEMBERS.RECOMMENDATIONS TO PREVENT THESE HAZARDS INCLUDE:
    A. PROTECT EXISTING COMBUSTIBLES PRIOR TO WELDING. KEEP A SEPARATE WATCHMAN AND SEVERAL FIRE EXTINGUISHERS ON HAND
    B. WELD IN SMALL INCREMENTS. ALLOW WELDS TO HARDEN BEFORE CONTINUING TO THE NEXT INCREMENT.
    C. DO NOT LEAVE THE SITE UNTIL SATISFIED THAT NO FIRE HAZARD EXISTS.

4. THE CONTRACTOR SHALL BE RESPONSIBLE FOR THE DESIGN AND ERECTION OF ALL SHORING NECESSARY TO SAFEGUARD THE EXISTING STRUCTURE. THE CONTRACTOR SHALL SUBMIT A DETAILED PLAN FOR SHORING, BRACING, AND PROTECTION OF THE EXISTING CONSTRUCTION.

DEMOLITION NOTES

1. PERFORM DEMOLITION IN A CAREFUL AND CONTROLLED MANNER TO PREVENT DAMAGE TO EXISTING STRUCTURES , UTILITES AND IMPROVEMENTS TO REMAIN.

2. CONTRACTOR SHALL BE SOLEY RESPONSIBLE FOR ALL MEANS, METHODS, SEQUENCES . PROCEDURES, AND SAFETY PRECAUTIONS ASSOCIATED WITH DEMOLITION. ENGINEER'S DRAWINGS INDICATE LIMITS OF DEMOLITION ONLY AND DO NOT PRESCRIBE HOW DEMOLITION IS TO BE PERFORMED.

3. VERIFY FIELD CONDITIONS PRIOR TO STARTING WORK. PROVIDE ALL NECESSARY BRACING, SHORING, AND TEMPORARY SUPPORTS TO PREVENT MOVEMENT OR DAMAGE TO ADJACENT OR REMAINING STRUCTURES.

4. IMMEDIATELY CEASE OPERATIONS AND NOTIFY OWNER AND ENGINEER IF MOVEMENT, SETTLEMENT, OR UNSAFE CONDITIONS ARE OBSERVED DO NOT RESUME WORK UNTIL SAFETY HAS BEEN RESTORED.

5. REMOVE ONLY PORTIONS OF CONSTRUCTION INDICATED ON THE DRAWINGS. WHERE LIMITS ARE UNCLEAR, CONFIRM EXTENT OF REMOVAL WITH ENGINEER PRIOR TO PROCEEDING.

6. PERFORM ALL WORK IN ACCORDANCE WITH LOCAL, STATE AND FEDERAL REGULATIONS INCLUDING OSHA REQUIREMENTS. MAINTAIN SAFE ACCESS AND CONTROL DUST, DEBRIS, AND NOISE AT ALL TIMES.

7. REPAIR OR REPLACE, AT NO COST TO THE OWNER, ANY DAMAGE RESULTING FROM DEMOLITION OPERATIONS OR DEMOLITION PERFORMED BEYOND THE LIMITS INDICATED.

8. ENGINEER'S RESPONSIBILITY IS LIMITED TO DEFINING THE EXTENT OF DEMOLITION. CONTRACTOR SHALL BE FULLY RESPONSIBLE FOR MEANS, METHODS SAFETY AND PRTECTION OF EXISTING STRUCTURES AND FACILITIES.

STRUCTURAL ABBREVIATIONS

AB	ANCHOR BOLT	FLR	FLOOR	PERP	PERPENDICULAR
ALT	ALTERNATIVE	FOM	FACE OF MASONRY	PL	PLATE
ALUM	ALUMINUM	FS	FAR SIDE	PLUMB	PLUMBING
ARCH	ARCHITECTURAL	FT	FOOT	PNL	PANEL
B	BOTTOM	FTG	FOOTING	POLY	POLYETHYLENE
B/	BOTTOM OF	FUT	FUTURE	PREFAB	PREFABRICATED
BLDG	BUILDING	GA	GAGE	PSF	POUNS PER SQUARE FOOT
BM	BEAM	GALV	GALVANIZED	PSI	POUNS PER SQUARE INCH
B/BOT	BOTTOM	GYP	GYPSUM	QTY	QUANTITY
BRG	BEARING	HORIZ	HORIZONTAL	R	RADIUS
C	CHANNEL SHAPE	HP	HIGH POINT	RE	CALLED RIGHT END
C TO C	CENTER TO CENTER	HSS	HOLLOW STRUCTURAL SECTION	RE:	REFERENCE
CANT	CANTILIVER	HT	HEIGHT	REINF	REINFORCE (MENT) (D)
CJ	CONTROL JOINT	IN	INCH	REQ	REQUIRE
CONST JT	CONSTRUCTION JOINT	INFO	INFORMATION	REQD	REQUIRED
CL	CENTER LINE	INT	INTERIOR	REV	REVISION
CLR	CLEAR	INSUL	INSULATION	SCHED	SCHEDULE
CMU	CONCRETE MASONRY UNIT	JB	JOIST BOTTOM / SEAT ELEVATION	SF	SQUARE FOOT
COL	COLUMN	JST	JOIST	SHT	SHEET
CONC	CONCRETE	JT	JOINT	SI	SQUARE INCH
CONN	CONNECTION	K	KIPS	SIM	SIMILAR
CONST	CONSTRUCTION	KO	KNOCK OUT	SL	SLOPE
CONT	CONTINUOUS	KSF	KIPS PER SQUARE FOOT	SOG	SLAB ON GRADE
COORD	COORDINATE	KSI	KIPS PER SQUARE INCH	SPA	SPACES (D)
CTR	CENTER	L	ANGLE	SPEC	SPECIFICATION
CTRD	CENTERED	LB	POUND	STD	STANDARD
D	DEPTH	LE	LEFT END	STIFF	STIFFENER
DBA	DEFORMED ANCHOR BAR	LG	LONG	STL	STEEL
DBL	DOUBLE	LLH	LONG LEG HORIZONTAL	SW	SHORTWAY
DBL TEE	PRECAST DOUBLE TEE	LLV	LONG LEG VERTICAL	SYM	SYMETRICAL
DIA	DIAMETER	LSH	LONG SIDE HORIZONTAL	T	TOP
DIAG	DIAGONAL	LSV	LONG SIDE VERTICAL	T/	TOP OF
DIM	DIMENSION	LP	LOW POINT	T&B	TOP AND BOTTOM
DN	DOWN	LW	LONG WAY	THK	THICK
DTL	DETAIL	M	MIDDLE	TOF	TOP OF FOOTING
DWG	DRAWING	MANUF/MFR	MANUFACTER	TOJ	TOP OF JOIST
DWL	DOWEL	MATL	MATERIAL	TOS	TOP OF STEEL
EA	EACH	MAX	MAXIMUM	TRANSV	TRANSVERSE
EE	EACH END	MECH	MECHANICAL	TYP.	TYPICAL
EF	EACH FACE	MEP	MECHANICAL/ELECTRICAL/ PLUMBING	UON	UNLESS OTHERWISE NOTED
EJ	EXPANSION JOINT			VERT	VERTICAL
EL/ELEV	ELEVATION	MEZZ	MEZZANINE	WF	WIDE FLANGE SHAPE
EOR	ENGINEER OF RECORD	MIN	MINIMUM	W/	WITH
EOS	EDGE OF SLAB	MISC	MISCELLANEOUS	W/O	WITHOUT
EQ	EQUAL	MO	MASONRY OPENING	WP	WORK POINT
EQUIP	EQUIPMENT	MSL	MEAN SEA LEVEL	WS	WATERSTOP
ES	EACH SIDE	MTL	METAL	WT	T SHAPE
EW	EACH WAY	NO	NUMBER	WWF	WELDED WIRE FABRIC
EXIST	EXISTING	NS	NEAR SIDE	&	AND
EXP	EXPANSION	N.T.S.	NOT TO SCALE	@	AT
EXT	EXTERIOR	OC	ON CENTER	Ø	DIAMETER
FD	FLOOR DRAIN	OC EW	ON CENTER EACH WAY	#	NUMBER
FDN	FOUNDATION	OPNG	OPENING	±	PLUS/MINUS
FL	FULL LENGTH	OPP	OPPOSITE		
FF	FINISH FLR	PEMB	PREENGINEERED METAL BUILDING		

NO.	DATE	REVISION	APP.

IDS Engineering Group
13430 NW. Freeway, Suite 700
Houston, Tx. 77040
713.462.3178
TxEng Firm 2726 / TxSurv Firm 10110700

CONCEPT ENGINEERS
TX. FIRM REGISTRATION # F-04417
Structures for the whole community

PRELIMINARY
NOT FOR CONSTRUCTION,
BIDDING, OR PERMIT PURPOSES.
FOR REVIEW ONLY.
DAVID MOORE
TEXAS LICENSE NO. 139405

Date: 05/08/26

CITY OF HOUSTON
DEPARTMENT OF PUBLIC WORKS AND ENGINEERING

LIFT STATION RENEWAL AND REPLACEMENT FY 2023

LOCKWOOD LIFT STATION
GENERAL NOTES
(SHEET 2 OF 3)

WBS NUMBER	FOR CITY OF HOUSTON USE ONLY
R-000267-0179-3	
DRAWING SCALE	
AS NOTED	
CITY OF HOUSTONPM	
NAWARAJ PANTA, P.E.	
DWG. NO. LCK-S-03	SHEET NO. 34 OF 361

IDS JOB No. 0057-085-00

FILE PATH: G:\COMMERCIAL PROJECTS\24137 - Lift Station Rehab & Construction\STRUCTURAL\JV_DWGS\XREF\24137-TBlock.dwg

SPECIAL INSPECTIONS NOTES

THE FOLLOWING STATEMENT AND SCHEDULES OF INSPECTIONS OUTLINE THE SPECIAL INSPECTIONS AND TESTS NECESSARY FOR THIS PROJECT.
THE GENERAL CONTRACTOR SHALL HIRE AN "APPROVED AGENCY" PER THE INTERNATIONAL BUILDING CODE (IBC) SECTION 1703 TO PROVIDE SPECIAL INSPECTIONS FOR THIS PROJECT. THE QUALIFIED SPECIAL INSPECTOR SHALL REFERENCE THESE PLANS AND CHAPTER 17 OF THE IBC FOR ALL SPECIAL INSPECTION REQUIREMENTS. SPECIAL INSPECTION REPORTS SHOULD BE SUBMITTED WEEKLY.
THE APPROVED AGENCY SHALL SUBMIT COPIES OF ALL INSPECTION REPORTS TO THE ARCHITECT/ENGINEER AND THE AUTHORITY HAVING JURISDICTION (BUILDING OFFICIAL) FOR REVIEW. THE SPECIAL INSPECTION SHALL BRING DISCREPANCIES TO THE IMMEDIATE ATTENTION OF THE GENERAL CONTRACTOR FOR CORRECTION. IF THE DISCREPANCIES ARE NOT CORRECTED, THE DISCREPANCIES SHALL BE BROUGHT TO THE ATTENTION OF THE BUILDING OFFICIAL AND TO THE ARCHITECT PRIOR TO THE COMPLETION OF THAT PHASE OF THE WORK. IN ADDITION TO SPECIAL INSPECTION REPORTS AND TESTS, SUBMIT REPORTS AND CERTIFICATES NOTED IN IBC 1704.5 TO THE AUTHORITY HAVING JURISDICTION. FINAL REPORTS DOCUMENTING SPECIAL INSPECTIONS AND TESTS MUST BE SUBMITTED TO THE BUILDING OFFICIAL PER IBC 1704.2.4.

STATEMENT OF SPECIAL INSPECTIONS:

THIS SPECIAL INSPECTIONS STATEMENT HAS BEEN PREPARED WITH THE UNDERSTANDING THAT SEOR AND THE BUILDING OFFICIAL REPRESENTATIVE WILL:

- REVIEW AND ACCEPT THE QUALIFICATIONS OF THE SPECIAL INSPECTORS
- OBSERVE THE SPECIAL INSPECTION OPERATIONS TAKING PLACE AT THE PROJECT SITE TO ENSURE THAT THE SPECIAL INSPECTORS ARE COMPETENT AND CARRYING OUT THEIR ASSIGNED RESPONSIBILITIES AS SPECIFIED IN THIS STATEMENT.
- REVIEW ALL THE SPECIAL INSPECTION REPORTS THAT THE SPECIAL INSPECTOR HAS PROVIDED THEM WITH.
- CONDUCT INSPECTIONS AS SPECIFIED BY IBC SECTION 110.3

THE FOLLOWING SPECIAL INSPECTIONS APPLY TO THIS PROJECT:

- SPECIAL INSPECTIONS FOR STANDARD BUILDINGS PER IBC 1705.1 [REQUIRED]
- STORM SHELTER INSPECTIONS SHALL MATCH THE REQUIREMENTS OF THE HOST BUILDING PER SECTION 106 OF 2020 ICC-500. [REQUIRED]

SPECIAL INSPECTION OF SHOP-FABRICATED GRAVITY LOAD-BEARING MEMBERS AND ASSEMBLIES:

SPECIAL INSPECTION OF SHOP-FABRICATED GRAVITY LOAD BEARING MEMBERS & ASSEMBLIES SHALL BE PERFORMED BY THE SPECIAL INSPECTOR AS STATED IN SECTION 1704.2.5, WHICH INCLUDES THE FOLLOWING:

- BEFORE FABRICATION BEGINS, SPECIAL INSPECTORS REPRESENTING THE GENERAL CONTRACTOR NEED TO VISIT THE FABRICATOR'S SHOP TO VERIFY THAT THE FABRICATOR HAS DETAILED FABRICATION AND QUALITY CONTROL (QC) PROCEDURES IN PLACE. THESE PROCEDURES SHOULD COVER INSPECTION, WORKMANSHIP CONTROL, MATERIAL CONTROL, AND THE FABRICATOR'S ABILITY TO ADHERE TO THE APPROVED CONSTRUCTION DOCUMENTS AND REFERENCED STANDARDS.
- THE FABRICATOR MUST HAVE DETAILED PROCEDURES FOR MATERIAL CONTROL AVAILABLE FOR THE INSPECTOR TO REVIEW. THESE PROCEDURES SHOULD SHOW THAT THE FABRICATOR CAN MAINTAIN ACCURATE RECORDS AND PROCESSES SO THAT AT ANY POINT DURING FABRICATIATION, THE MATERIAL SPECIFICATION, GRADE, AND RELEVANT TEST REPORTS FOR PRIMARY LOAD-CARRYING MEMBERS CAN BE IDENTIFIED.

SPECIAL INSPECTION OF STRUCTURAL STEEL:

AS PER IBC SECTION 1705.2.1, A QUALIFIED SPECIAL INSPECTOR OF AN "APPROVED AGENCY" PROVIDING QUALITY ASSURANCE (QA) SPECIAL INSPECTIONS FOR THE PROJECT SHALL REVIEW AND CONFIRM THE FABRICATOR AND ERECTOR'S QUALITY CONTROL (QC) PROCEDURES FOR COMPLETENESS AND ADEQUACY RELATIVE TO AISC 360-16 CHAPTER N, AISC 303-16 CODE OF STANDARD AND PRACTICE, AWS D1.1-2015 STRUCTURAL WELDING CODE, AND 2018 IBC CODE REQUIREMENTS FOR THE FABRICATOR'S SCOPE OF WORK.

- QA AGENCY PROVIDING SPECIAL INSPECTIONS MUST EMPLOY PERSONNEL WHO MEET THE MINIMUM QUALIFICATION REQUIREMENTS FOR INSPECTION AND NONDESTRUCTIVE TESTING (NDT) AS PER AISC 360 SECTION N4.
- ENSURE THE FABRICATOR AND ERECTOR QUALITY CONTROL (QC) PROGRAM COMPLIES WITH AISC 360 SECTION N2.
- QC AND QA PERSONNEL SHALL INSPECT WELDS AND BOLTS PER THE SCHEDULE OF SPECIAL INSPECTIONS BELOW.
- ALL AWS D1.1 STRUCTURAL WELDING CODE PROVISIONS FOR STATICALLY LOADED STRUCTURES SHALL APPLY.
- NONDESTRUCTIVE TESTING (NDT) OF WELDS:
  - NON-DESTRUCTIVE TESTING (NDT) OF WELDED JOINTS PER AISC 360 N5.5
  - RISK CATEGORY FOR DETERMINATION OF THE EXTENT OF NDT PER AISC 360 N5.5B IS NOTED IN THE DESIGN CRITERIA AND LOADS SECTION OF THESE GENERAL REQUIREMENTS. NDT MUST BE DOCUMENTED, AND REPORTS SHOULD SPECIFY THE TESTED WELD BY PIECE MARK AND LOCATION.
- ADDITIONAL INSPECTION TASKS PER AISC 360 SECTION N5.8.

POST-INSTALLED ANCHORS TO CONCRETE AND MASONRY: SHALL COMPLY WITH IBC SECTION 1703. INSPECTIONS MUST COMPLY WITH THE REQUIREMENTS IN THE APPROVED ICC EVALUATION REPORT AND THE DESIGN REQUIREMENTS SPECIFIED ON THE DRAWINGS. REFER TO THE POST INSTALLED ANCHORS SECTION OF THESE NOTES FOR ANCHORS THAT ARE THE BASIS OF THE DESIGN. THE SPECIAL INSPECTOR MUST ENSURE THAT THE ANCHORS ARE IN ACCORDANCE WITH THE POST-INSTALLED ANCHORS SECTION OF THESE NOTES OR AS SPECIFICALLY INDICATED ON THE DRAWINGS. SUBSTITUTIONS MUST BE APPROVED BY THE SER AND REQUIRE SUPPORTING CALCULATIONS AND THE CURRENT 2018 IBC-RECOGNIZED ICC EVALUATION SERVICES (ES) REPORT. SPECIAL INSPECTORS MUST DOCUMENT COMPLIANCE WITH ALL ELEMENTS REQUIRED IN THE RELEVANT ICC EVALUATION SERVICES (ES) REPORT IN THEIR SPECIAL INSPECTION REPORT.

PREFABRICATED CONSTRUCTION: ALL PREFABRICATED CONSTRUCTION SHALL CONFORM TO IBC SECTION 1703.

PER THE ICC-500, SECTION 111.1 STRUCTURAL OBSERVATION :

DURING CONSTRUCTION OF THE STORM SHELTER, THE BUILDING OWNER SHALL EMPLOY A REGISTERED DESIGN PROFESSIONAL TO CONDUCT VISUAL OBSERVATIONS OF THE CONSTRUCTION OF THE STRUCTURAL SYSTEM FOR GENERAL CONFORMANCE TO THE APPROVED CONSTRUCTION DOCUMENTS AT SIGNIFICANT CONSTRUCTION STAGES AND AT COMPLETION OF THE CONSTRUTION OF THE STRUCTURAL SYSTEM.

STRUCTURAL OBSERVATION SHALL NOT OBVIATE THE NEED FOR OTHER INSPECTIONS OR TESTING REQUIRED BY THIS STANDARD OR APPLICABLE CODE.

DEFICIENCIES SHALL BE REPORTED IN WRITING TO THE ATHORITY HAVING JURISDICTION AND OWNER OR THE OWNER'S AUTHORIZED AGENT. AT THE CONCLUSION OF THE WORK, THE REGISTERED DESIGN PROFESSIONAL WHO MADE THE STRUCTURAL OBSERVATIONS SHALL SUBMIT TO THE AUTHORITY HAVING JURISDICTION A WRITTEN STATEMENT THAT THE SITE VISITS HAVE BEEN MADE AND SHALL IDENTIFY ANY REPORTED DEFICIENCIES THAT, TO THE BEST OF THE STRUCTURAL OBSERVER'S KNOWLEDGE, HAVE NOT BEEN RESOLVED.

SECTION 110
SPECIAL INSPECTIONS

110.1 SPECIAL INSPECTIONS

SPECIAL INSPECTION SHALL BE PROVIDED IN ACCORDANCE SITH THIS SECTION, IN ADDITION TO THOSE REQUIRED BY THE *AUTHORITY HAVING JURISDICTION* IN ACCORDANCE WITH THE *APPLICABLE CODE*. ONE STATEMENT OF *SPECIAL INSPECTIONS* SHALL BE PERMITTED TO APPLY TO BOTH *HOST BUILDING* AND *STORM SHELTER* CONSTRUCTION.

EXCEPTION: PREFABRICATED OR PANELIZED *STORM SHELTER* COMPONENTS THAT HAVE BEEN INSPECTED AND *LABELED* BY AN *APPROVED AGENCY* MEETING THE REQUIREMENTS OF THE *APLICABLE CODE*.

110.1.2 SPECIAL CASES

SPECIAL INSPECTIONS SHALL BE PROVIDED FOR PROPOSED WORK COMPRISED OF THE FOLLOWING:

1. CONSTRUCTION MATERIALS AND SYSTEMS THAT ARE ALTERNATIVES TO TRADITIONAL MATERIALS AND SYSTEMS PRESCRIBED BY THE *APPLICABLE CODE*.
2. UNUSUAL DESIGN AND CONSTRUCTION APPLICATIONS.
3. ANCHORS POS-INSTALLED IN HARDENED CONCRETE AND MASONRY, WHERE USED FOR ANCHORAGE OF *STORM SHELTER* COMPONENTS FORMING A PART OF THE *STORM SHELTER* ENCLOSURE OR FOR ANCHORAGE OF THE *STORM SHELTER* STRUCTURE TO FOUNDATIONS SHALL BE IN ACCORDANCE WITH SECTION 110.1.2.1.

110.1.2.1 SPECIAL INSPECTIONS TO VERIFY ANCHOR INSTALLATION

A *SPECIAL INSPECTION* SHALL BE PROVIDED TO VERIFY THE POS-INSTALLED ANCHOR INSTALLATION AND CAPACITY IN ACCORDANCE WITH SECTION 106.2.1. FOR POST-INSTALLED ANCHORAGE TO FOUNDATIONS, *SPECIAL INSPECTION* SHALL BE PROVIDED TO VERIFY FOUNDATION ADEQUACY IN ACCORDANCE WITH SECTIONS 106.2.1 AND 307.

TABLE 1705.3
REQUIRED SPECIAL INSPECTIONS AND TESTS OF CONCRETE CONSTRUCTION

TYPE	CONTINUOUS SPECIAL INSPECTION	PERIODIC SPECIAL INSPECTION	REFERENCED STANDARD[a]	IBC REFERENCE
1. INSPECT REINFORCEMENT, INCLUDING RESTRESSING TENDONS, AND VERIFY PLACEMENT.	-	X	ACI 318: CH. 20, 25.2, 25.3, 26.6.1-26.6.3	-
2. REINFORCING BAR WELDING:				
a. VERIFY WELDABILITY OF REINFORCING BARS OTHER THAN ASTM A706;			AWS D1.4	-
b. INSPECT SINGLE-PASS FILLET WELDS, MAXIMUM 5/16"; AND	-	X	ACI 318: 26.6.4	
c. INSPECT ALL OTHER WELDS.	X	X		
3. INSPECT ANCHORS CAST IN CONCRETE.	-	X	ACI 318: 17.8.2	-
4. INSPECT ANCHORS POST-INSTALLED IN HARDENED CONCRETE MEMBERS.[B]				
a. ADHESIVE ANCHORS INSTALLED IN HORIZONTALLY OR UPWARDLY INCLINED ORIENTATIONS TO RESIST SUSTAINED TENSION LOADS.	X	X	ACI 318: 17.8.2.4	-
b. MECHANICAL ANCHORS AND ADHESIVE ANCHORS NOT DEFINED IN 4.A.			ACI 318: 17.8.2	
5. VERIFY USE OF REQUIRED DESIGN MIX.	-	X	ACI 318: CH. 19, 26.4.3, 26.4.4	-
6. PRIOR TO CONCRETE PLACEMENT, FABRICATE SPECIMENS FOR STRENGTH TESTS, PERFORM SLUMP AND AIR CONTENT TESTS, AND DETERMINE THE TEMPERATURE OF THE CONCRETE.	X		ASTM C31 ASTM C172 ACI 318: 26.5, 26.12	-
7. INSPECT CONCRETE AND SHOTCRETE PLACEMENT FOR PROPER APPLICATION TECHNIQUES.	X		ACI 318: 26.5	-
8. VERIFY MAINTENANCE OF SPECIFIED CURING TEMPERATURE AND TECHNIQUES.	-	X	ACI 318: 26.10	-
9. INSPECT PRESTRESSED CONCRETE FOR: A. APPLICATION OF PRESTRESSING FORCES; AND B. GROUTING OF BONDED PRESTRESSING TENDONS.	X X		ACI 318: CH. 20, 25.2, 25.3, 26.6.1-26.6.3	-
10. INSPECT ERECTION OF PRECAST CONCRETE MEMBERS.	-	X	ACI 318: 26.9	-
11. FOR PRECAST CONCRETE DIAPHRAGM CONNECTIONS OR REINFORCEMENT AT JOINTS CLASSIFIED AS MODERATE OR HIGH DEFORMABILITY ELEMENTS (MDE OR HDE) IN STRUCTURES ASSIGNED TO SEISMIC DESIGN CATEGORY C, D, E OR F, INSPECT SUCH CONNECTIONS AND REINFORCEMENT IN THE FIELD FOR:				
a. INSTALLATION OF THE EMBEDDED PARTS	X		ACI 318: 26.13.1.3	-
b. COMPLETION OF THE CONTINUITY OF REINFORCEMENT ACROSS JOINTS.	X		ACI 550.5	
c. COMPLETION OF CONNECTIONS IN THE FIELD.	X			
12. INSPECT INSTALLATION TOLERANCES OF PRECAST CONCRETE DIAPHRAGM CONNECTIONS FOR COMPLIANCE WITH ACI 550.5.	-	X	ACI 318: 26.13.1.3	-
13. VERIFY IN-SITU CONCRETE STRENGTH, PRIOR TO STRESSING OF TENDONS IN POST-TENSIONED CONCRETE AND PRIOR TO REMOVAL OF SHORES AND FORMS FROM BEAMS AND STRUCTURAL SLABS.	-	X	ACI 318: 26.11.2	-
14. INSPECT FORMWORK FOR SHAPE, LOCATION AND DIMENSIONS OF THE CONCRETE MEMBER BEING FORMED.	-	X	ACI 318: 26.11.1.2(b)	-

SCHEDULES OF SPECIAL INSPECTIONS:

TABLE 1705.6
REQUIRED SPECIAL INSPECTIONS AND TESTS OF SOILS

TYPE	CONTINUOUS SPECIAL INSPECTION	PERIODIC SPECIAL IN- SPECTION
1. VERIFY MATERIALS BELOW SHALLOW FOUNDATIONS ARE ADEQUATE TO ACHIEVE THE DESIGN BEARING CAPACITY.	-	X
2. VERIFY EXCAVATIONS ARE EXTENDED TO PROPER DEPTH AND HAVE REACHED PROPER MATERIAL.	-	X
3. PERFORM CLASSIFICATION AND TESTING OF COMPACTED FILL MATERIALS.	-	X
4. VERIFY USE OF PROPER MATERIALS, DENSITIES AND LIFT THICKNESSES DURING PLACEMENT AND COMPACTION OF COMPACTED FILL.	X	-
5. PRIOR TO PLACEMENT OF COMPACTED FILL, INSPECT SUBGRADE AND VERIFY THAT SITE HAS BEEN PREPARED PROPERLY.	-	X

TABLE 1705.2.3
REQUIRED SPECIAL INSPECTIONS OF OPEN-WEB STEEL JOISTS AND JOIST GIRDERS

TYPE	CONTINUOUS SPECIAL INSPECTION	PERIODIC SPECIAL INSPECTION	REFERENCED STANDARD[a]
1. INSTALLATION OF OPEN-WEB STEEL JOISTS AND JOIST GIRDERS.			
a. END CONNECTIONS – WELDING OR BOLTED.	-	X	SJI SPECIFICATIONS LISTED IN SECTION 2207.1.
b. BRIDGING – HORIZONTAL OR DIAGONAL.	-	X	-
1. STANDARD BRIDGING.	X	X	SJI SPECIFICATIONS LISTED IN SECTION 2207.1.
2. BRIDGING THAT DIFFERS FROM THE SJI SPECIFICATIONS LISTED IN SECTION 2207.1.	-	X	-

MINIMUM REQUIREMENTS FOR INSPECTIONS OF STRUCTURAL STEEL CONSTRUCTION

INSPECTION TASKS	QC	QA	REFERENCED STANDARD
INSPECTION TASKS PRIOR TO WELDING			
1. Welder qualification records and continuity records	P	O	AISC 360 TABLE N5.4-1
2. Welding procedure specifications (WPSs) available	P	O	AISC 360 TABLE N5.4-1
3. Manufacturing certifications for welding consumables available	P	O	AISC 360 TABLE N5.4-1
4. Material identification (type/grade)	P	O	AISC 360 TABLE N5.4-1
5. Welder Identification system	P	O	AISC 360 TABLE N5.4-1
8. Configuration and finish of access holes	P	O	AISC 360 TABLE N5.4-1
9. Fit-up of fillet welds • Dimensions (alignment gaps at root) • Cleanliness (condition of steel surfaces) • Tacking (tack weld quality and location)	P	O	AISC 360 TABLE N5.4-1
10. Check welding equipment	P	O	AISC 360 TABLE N5.4-1
INSPECTION TASKS DURING WELDING			
1. Use of qualified welders	P	O	AISC 360 TABLE N5.4-2
2. Control and handling of welding consumables • Packaging • Exposure Control	P	O	AISC 360 TABLE N5.4-2
3. No welding over cracked track welds	P	O	AISC 360 TABLE N5.4-2
4. Environmental conditions • Wind speed within limits • Precipitation and temperature	P	O	AISC 360 TABLE N5.4-2
5. WPS followed • Settings on welding equipment • Travel speed • Selected welding materials • Shielding gas type/flowrate • Preheat applied • Interpass temperature maintained (min/max) • Proper position (F,V,H,OH)	P	O	AISC 360 TABLE N5.4-2
6. Welding techniques • Interpass and final cleaning • Each pass within profile limitations • Each pass meets quality requirements	P	O	AISC 360 TABLE N5.4-2
INSPECTION TASKS AFTER WELDING			
1. Welds cleaned	P	O	AISC 360 TABLE N5.4-3
2. Size, length, and locations of welds	P	O	AISC 360 TABLE N5.4-3
3. Welds meet visual acceptance criteria • Crack prohibition • Weld/base-metal fusion • Crater cross section • Weld profiles • Weld size • Undercut • Porosity	P	O	AISC 360 TABLE N5.4-3
4. Arc strikes	P	O	AISC 360 TABLE N5.4-3
5. k-area	P	O	AISC 360 TABLE N5.4-3
6. Weld access holes in roled heavy shapes and built-up heavy shapes	P	O	AISC 360 TABLE N5.4-3
7. Backing removed and weld tabs removed (if required)	P	O	AISC 360 TABLE N5.4-3
8. Repair activities	P	O	AISC 360 TABLE N5.4-3
9. Document acceptance or rejection of welded joint or member	P	O	AISC 360 TABLE N5.4-3
10. No prohibited welds have been added without the approval of the EOR	P	O	AISC 360 TABLE N5.4-3
INSPECTION TASKS PRIOR TO BOLTING			
1.Manufacturer's certifications available for fastener materials	P	O	AISC 360 TABLE N5.6-1
2.Fasteners marked in accordance with ASTM requirements	P	O	AISC 360 TABLE N5.6-1
3.Correct fasteners selected for the joint detail (grade, type, bolt length if threads are to be excluded from shear plane)	P	O	AISC 360 TABLE N5.6-1
4.Correct bolting procedures selected for joint detail	P	O	AISC 360 TABLE N5.6-1
5.Connecting elements, including the appropriate faying surface condition and hole preparation, if specified, meet applicable requirements.	P	O	AISC 360 TABLE N5.6-1
6.Pre-installation verification testing by installation personnel observed and documented for fastener assemblies and methods used	P	O	AISC 360 TABLE N5.6-1
7.Proper storage provided for bolts, nuts, washers and other fasteners components	P	O	AISC 360 TABLE N5.6-1
INSPECTION TASKS DURING BOLTING			
1. Fastener assemblies, of suitable condition, placed in all holes and washers are positioned as required	P	O	AISC 360 TABLE N5.6-2
2. Joint brought to the snug-tight condition prior to the pre-tensioning operation	P	O	AISC 360 TABLE N5.6-2
3. Fastener component not turned by the wrench prevented from rotating	P	O	AISC 360 TABLE N5.6-2
4. Fasteners are pre-tensioned in accordance with the RCSC Specification, progressing systematically from the most rigid point toward the free edges.	P	O	AISC 360 TABLE N5.6-2
INSPECTION TASKS AFTER BOLTING	P	O	AISC 360 TABLE N5.6-2
1. Document acceptance or rejection of bolted connections	P	O	AISC 360 TABLE N5.6-2

O - Observe these items on a random basis. Operations need not be delayed pending these inspections
P - Perform these tasks for each welded joint or member, each bolted connection, or each steel element

NO.	DATE	REVISION	APP.

IDS Engineering Group
13430 NW. Freeway, Suite 700
Houston, Tx. 77040
713.462.3178
TxEng Firm 2726 / TxSurv Firm 10110700

CONCEPT ENGINEERS
TX. FIRM REGISTRATION # F-04417
Structures for the whole community

PRELIMINARY
NOT FOR CONSTRUCTION,
BIDDING, OR PERMIT PURPOSES.
FOR REVIEW ONLY.
DAVID MOORE
TEXAS LICENSE NO. 139405
Date: 05/08/26

CITY OF HOUSTON
DEPARTMENT OF PUBLIC WORKS AND ENGINEERING

LIFT STATION RENEWAL AND REPLACEMENT FY 2023

LOCKWOOD LIFT STATION
GENERAL NOTES
(SHEET 3 OF 3)

WBS NUMBER	FOR CITY OF HOUSTON USE ONLY
R-000267-0179-3	
DRAWING SCALE	
AS NOTED	
CITY OF HOUSTONPM	
NAWARAJ PANTA, P.E.	
DWG. NO. LCK-S-04	SHEET NO. 35 OF 361

IDS JOB No. 0057-085-00

PLOTTED: 5/21/2019 1:28 PM
FILE PATH: G:\COMMERCIAL PROJECTS\24137 - Lift Station Rehab & Construction\STRUCTURAL\xV-DWGS\XREF\24137-TBlock.dwg

PLOTTED: 5/21/2019 1:28 PM

FILE PATH: G:\COMMERCIAL PROJECTS\24137 - Lift Station Rehab & Construction\STRUCTURAL\JV_DWGS\XREF\24137-TBlock.dwg

NO.	DATE	REVISION	APP.

LOCKWOOD DRIVE
(R.O.W. VARIES)
C.O.H. DRAWING No. 19989

RIGHT-OF-WAY VARIES

40' SANITARY SEWER EASEMENT
H.C.C.F. No. 20120509529

EXIST. WATER VALVE
(TO REMAIN)

EXIST. 2" WATER
(TO REMAIN)

PROPOSED RETAINING WALL
RE: CIVIL PLANS
SEE SHEET LCK-S-06 FOR DETAILS

PROPOSED NATURAL GAS
GENERATOR PLATFORM
RE: CIVIL

PROPOSED
ELECTRICAL
CONTROL BUILDING
RE: CIVIL

1 LCK-S-06

1 LCK-S-07

1 LCK-S-10

PORTION OF EXISTING SLAB-ON-GRADE TO BE REMOVED. REPLACE WITH NEW STRUCTURAL SLAB AS SHOWN ON SHEET LCK-S-10 SEE DETAILS LCK-S-13 FOR TYPICAL CONNECTION TO EXISTING SLAB. CONTRACTOR SHALL VERIFY EXISTING CONDITIONS, INCLUDING SLAB THICKNESS, REINFORCING, AND ELEVATIONS, PRIOR TO SAWCUTTING OR REMOVAL. CONTRACTOR IS RESPONSIBLE FOR MAINTAINING STABILITY OF ADJACENT SLAB AND COORDINATING FINAL ELEVATIONS, JOINT ALIGNMENT, AND SAWCUT LOCATIONS IN THE FIELD.

EXTENT OF EXISTING SLAB REMOVAL SHALL BE A MINIMUM OF 3'-0" BEYOND THE EDGE OF THE PROPOSED ELECTRICAL CONTROL BUILDING AND STAIRS, TYPICAL. CONTRACTOR SHALL COORDINATE EXACT REMOVAL LIMITS AND BUILDING LOCATIONS WITH CIVIL DRAWINGS AND VERIFY ALL DIMENSIONS AND LAYOUT IN THE FIELD PRIOR TO DEMOLITION. STRUCTURAL DRAWINGS INDICATE GENERAL INTENT ONLY.

IDS Engineering Group
13430 NW. Freeway, Suite 700
Houston, Tx. 77040
713.462.3178
TxEng Firm 2726 / TxSurv Firm 10110700

CONCEPT ENGINEERS
TX. FIRM REGISTRATION # F-04417
Structures for the whole community

PRELIMINARY
NOT FOR CONSTRUCTION, BIDDING, OR PERMIT PURPOSES.
FOR REVIEW ONLY.
DAVID MOORE
TEXAS LICENSE NO. 139405

Date: 05/08/26

CITY OF HOUSTON
DEPARTMENT OF PUBLIC WORKS AND ENGINEERING

LIFT STATION RENEWAL AND REPLACEMENT FY 2023
LOCKWOOD LIFT STATION SITE PLAN

WBS NUMBER	FOR CITY OF HOUSTON USE ONLY
R-000267-0179-3	
DRAWING SCALE	
AS NOTED	
CITY OF HOUSTONPM	
NAWARAJ PANTA, P.E.	

DWG. NO.	SHEET NO. 36 OF 361
LCK-S-05	

IDS JOB No. 0057-085-00

PLOTTED: 5/21/2019 1:28 PM

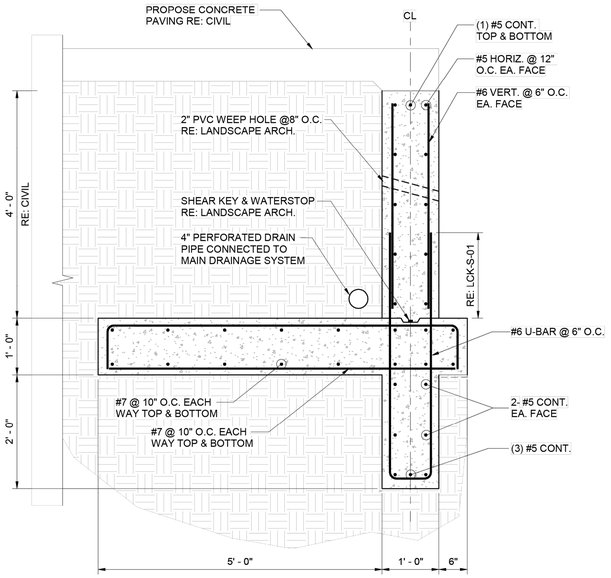

1 RETAINING WALL SECTION

3/4" = 1'-0"

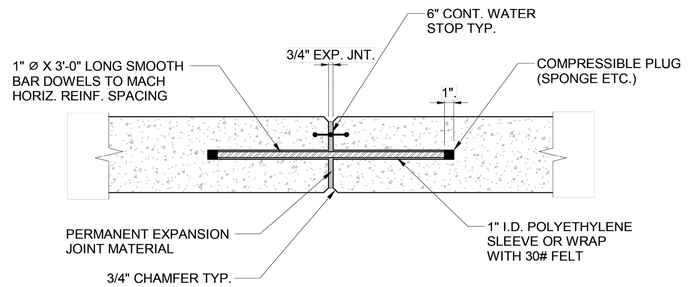

2 TYP. EXPANSION JOINT BETWEEN NEW RETAINING WALL SEGMENTS

1" = 1'-0"

RETAINING WALL NOTES:

1. RETAINING WALL DESIGN IS BASED ON THE GEOTECHNICAL INVESTIGATION REPORT NUMBER HGT2210460.1.1(A) BY HVJ ASSOCIATES, INC., DATED 03/31/2026. PROPOSED RETAINING WALL SHALL BE A CAST-IN-PLACE CONCRETE RETAINING WALL DESIGNED FOR THE FINAL GRADES SHOWN ON THE CIVIL DRAWINGS. REFER TO CIVIL DRAWINGS FOR WALL LOCATION, TOP OF WALL ELEVATIONS, ADJACENT GRADES, DRAINAGE, AND SITE IMPROVEMENTS. RETAINING WALL HAS BEEN DESIGNED FOR A MAXIMUM RETAINED HEIGHT NOT TO EXCEED 5'-0". CONTRACTOR SHALL VERIFY FINAL TOP OF WALL ELEVATIONS, FINISHED GRADES, AND RETAINED HEIGHTS WITH CIVIL DRAWINGS PRIOR TO CONSTRUCTION. NOTIFY E.O.R. IF ACTUAL RETAINED HEIGHT EXCEEDS 5'-0" OR THE GRADES SHOWN ON THE CIVIL DRAWINGS.
2. PROPOSED RETAINING WALL SHALL BE A NEW INDEPENDENT CAST-IN-PLACE CONCRETE RETAINING WALL AND SHALL NOT RELY ON THE EXISTING CONCRETE WALL, EXISTING PAVING, OR ADJACENT SITE ELEMENTS FOR VERTICAL OR LATERAL SUPPORT.
3. CONTRACTOR SHALL FIELD VERIFY THE LOCATION, ALIGNMENT, TOP ELEVATION, CONDITION, AND EXTENT OF THE EXISTING CONCRETE WALL PRIOR TO CONSTRUCTION OF THE NEW RETAINING WALL. NOTIFY E.O.R. OF ANY CONFLICTS BETWEEN THE PROPOSED RETAINING WALL, EXISTING CONCRETE WALL, UTILITIES, PAVING, CIVIL GRADING, OR DRAINAGE IMPROVEMENTS PRIOR TO PROCEEDING.
4. WHERE THE NEW RETAINING WALL ABUTS OR TERMINATES ADJACENT TO AN EXISTING CONCRETE WALL, PROVIDE A 1/2" MINIMUM ISOLATION JOINT WITH COMPRESSIBLE FILLER AND SEALANT. DO NOT DOWEL, ANCHOR, CHIP, CUT, OR OTHERWISE ATTACH THE NEW RETAINING WALL TO THE EXISTING CONCRETE WALL UNLESS SPECIFICALLY SHOWN ON THE STRUCTURAL DRAWINGS OR APPROVED IN WRITING BY THE E.O.R.
5. WALL HAS BEEN DESIGNED FOR A MAXIMUM RETAINED HEIGHT OF 5'-0", UNLESS NOTED OTHERWISE. CONTRACTOR SHALL VERIFY FINAL GRADES WITH CIVIL DRAWINGS PRIOR TO CONSTRUCTION. NOTIFY E.O.R. IF ACTUAL RETAINED HEIGHT EXCEEDS THE HEIGHT SHOWN ON STRUCTURAL DRAWINGS.
6. RETAINING WALL DESIGN ASSUMES DRAINED BACKFILL CONDITIONS. DESIGN BACKFILL PRESSURE IS BASED ON THE GEOTECHNICAL REPORT. DO NOT ALLOW HYDROSTATIC PRESSURE TO BUILD UP BEHIND WALL.
7. PROVIDE 4" PERFORATED DRAIN PIPE AT BASE OF WALL AS SHOWN. DRAIN PIPE SHALL BE SURROUNDED BY FREE-DRAINING GRANULAR MATERIAL WRAPPED IN FILTER FABRIC AND CONNECTED TO THE SITE DRAINAGE SYSTEM. COORDINATE FINAL DRAINAGE CONNECTION WITH CIVIL DRAWINGS.
8. BACKFILL BEHIND RETAINING WALL SHALL CONSIST OF SELECT FILL CONFORMING TO THE GEOTECHNICAL REPORT. DO NOT USE HIGHLY PLASTIC OR EXPANSIVE CLAY BACKFILL. BACKFILL SHALL BE PLACED IN LIFTS AND COMPACTED IN ACCORDANCE WITH THE GEOTECHNICAL REPORT. AVOID OVERCOMPACTION DIRECTLY BEHIND THE WALL.
9. CONTRACTOR SHALL PROTECT THE EXISTING CONCRETE WALL, EXISTING PAVING, UTILITIES, AND ADJACENT IMPROVEMENTS DURING EXCAVATION, FORMING, REINFORCING, CONCRETE PLACEMENT, BACKFILLING, AND COMPACTION OPERATIONS. CONTRACTOR SHALL PROVIDE TEMPORARY SHORING, BRACING, SLOPING, OR SEQUENCING AS REQUIRED TO PREVENT DAMAGE OR MOVEMENT OF EXISTING CONSTRUCTION.
10. DO NOT BACKFILL AGAINST RETAINING WALL UNTIL CONCRETE HAS ACHIEVED THE REQUIRED DESIGN STRENGTH, UNLESS OTHERWISE APPROVED BY THE E.O.R. BACKFILL SHALL BE PLACED EVENLY AND IN A MANNER THAT DOES NOT OVERLOAD OR DAMAGE THE WALL.
11. RETAINING WALL EXPANSION JOINTS SHOWN ON THIS SHEET APPLY BETWEEN NEW RETAINING WALL SEGMENTS ONLY. DO NOT USE DOWELED EXPANSION JOINT DETAIL AT INTERFACE WITH EXISTING CONCRETE WALL. PROVIDE ISOLATION JOINT AT EXISTING CONCRETE WALL PER NOTE 4.
12. ALL CONCRETE, REINFORCING STEEL, CONCRETE COVER, CURING, AND CONSTRUCTION JOINT REQUIREMENTS SHALL COMPLY WITH THE REINFORCED CONCRETE NOTES, UNLESS MORE STRINGENT REQUIREMENTS ARE SHOWN ON THIS SHEET.

NO.	DATE	REVISION	APP.

IDS Engineering Group
13430 NW. Freeway, Suite 700
Houston, Tx. 77040
713.462.3178
TxEng Firm 2726 / TxSurv Firm 10110700

CONCEPT ENGINEERS
TX. FIRM REGISTRATION # F-04417
Structures for the whole community

PRELIMINARY
NOT FOR CONSTRUCTION, BIDDING, OR PERMIT PURPOSES.
FOR REVIEW ONLY.
DAVID MOORE
TEXAS LICENSE NO. 139405

Date: 05/08/26

CITY OF HOUSTON
DEPARTMENT OF PUBLIC WORKS AND ENGINEERING

LIFT STATION RENEWAL AND REPLACEMENT FY 2023

LOCKWOOD LIFT STATION RETAINING WALL

WBS NUMBER	FOR CITY OF HOUSTON USE ONLY
R-000267-0179-3	
DRAWING SCALE	
AS NOTED	
CITY OF HOUSTONPM	
NAWARAJ PANTA, P.E.	
SHEET NO. 37 OF 361	

DWG. NO. LCK-S-06

IDS JOB No. 0057-085-00

FILE PATH: G:\COMMERCIAL PROJECTS\24137 - Lift Station Rehab & Construction\STRUCTURAL\V_DWGS\XREF\24137-TBlock.dwg

PLOTTED: 5/21/2019 1:28 PM

FILE PATH: G:\COMMERCIAL PROJECTS\24137 - Lift Station Rehab & Construction\STRUCTURAL\V_DWGS\XREF\24137-TBlock.dwg

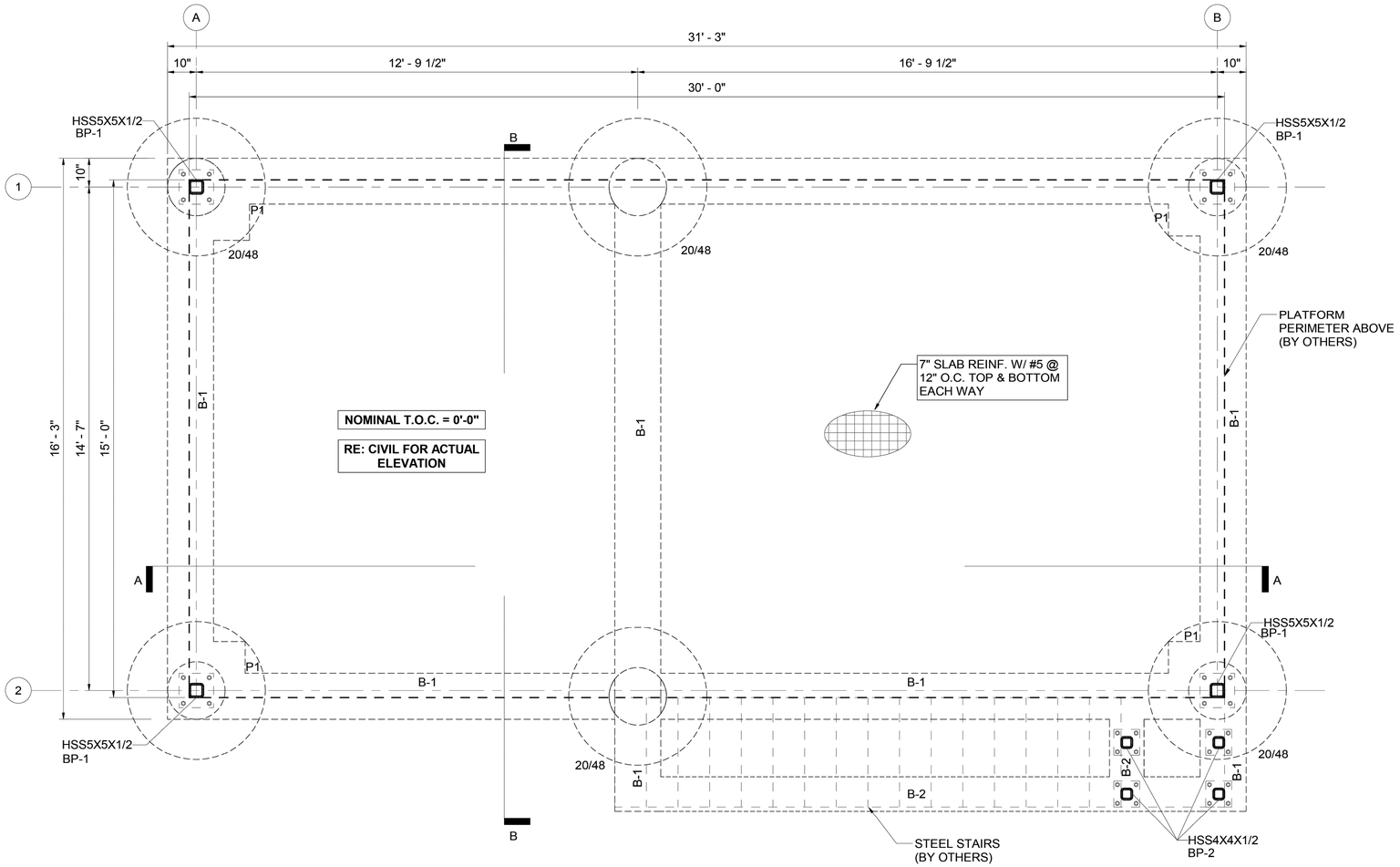

1 NATURAL GAS GENERATOR - FOUNDATION PLAN

1/2" = 1'-0"

FOUNDATION NOTES:

1. CENTER ALL DRILLED-AND-UNDERREAMED PIERS UNDER CENTERLINE OF STEEL COLUMN. IF NO STEEL COLUMN IS SHOWN, CENTER DRILLED-AND-UNDERREAMED PIERS UNDER CENTER OF GRADE BEAM.
2. ALL STEEL TO BE HOT DIPPED GALVANIZED.
3. FINISH FLOOR ELEVATION = 0'-0". FINISH FLOOR ELEVATION OF NEW STRUCTURAL SLAB TO MATCH ELEVATION OF EXISTING SLAB. RE: CIVIL FOR ACTUAL ELEVATION.
4. "P1" AS SHOWN ON PLAN INDICATES CONCRETE PEDESTAL TYPE P1. THE TOP ELEVATION OF ALL PEDESTALS IS AT -1'-0" TYP U.N.O. REFER TO LCK-S-14 FOR DIMENSIONS & REINF.
5. "B1" AS SHOWN ON PLAN INDICATES CONCRETE BEAM TYPE B1. THE TOP ELEVATION OF ALL BEAMS IS AT -1'-0" TYP U.N.O. REFER TO LCK-S-14 FOR BEAM SCHEDULE AND DETAILS.
6. "20/48" AS SHOWN ON PLAN INDICATES A DRILLED-AND-UNDERREAMED PIER WITH A 20 INCH DIAMETER SHAFT AND 48-INCH DIAMETER UNDERREAM/BELL. BOTTOM OF UNDERREAM/BELL SHALL BEAR A MINIMUM OF 18'-0" BELOW EXISTING GRADE, UNLESS NOTED OTHERWISE. AT -3'-0", TYP, U.N.O. RE: LCK-S-14 FOR DRILLED-AND-UNDERREAMED PIERS SCHEDULE AND DETAILS.
7. DRILLED-AND-UNDERREAMED PIERS SHALL BE CONSTRUCTED IN ACCORDANCE WITH THE GEOTECHNICAL REPORT BY HVJ ASSOCIATES, INC., REPORT NO. HGT2210460.1.1(A), DATED 03/31/2026. CONTRACTOR SHALL PROVIDE CASING, DEWATERING, AND/OR OTHER TEMPORARY SUPPORT METHODS AS REQUIRED TO MAINTAIN STABILITY OF DRILLED PIER EXCAVATIONS.
8. REFER TO CIVIL, MECHANICAL, ELECTRICAL, AND PLUMBING DRAWINGS FOR DIMENSIONS AND LOCATIONS OF EQUIPMENT, SLOPES, DEPRESSED AREAS, PIPES, CONDUITS, AND OTHER ITEMS NOT SHOWN ON STRUCTURAL DRAWINGS.
9. (*) INDICATES BEAMS WITH VARYING DEPTHS. RE: SECTION
10. PORTION OF EXISTING SLAB-ON-GRADE TO BE REMOVED SHALL BE REPLACED WITH NEW STRUCTURAL SLAB AS SHOWN ON PLAN IN THIS SHEET. CONTRACTOR SHALL VERIFY EXISTING CONDITIONS, INCLUDING SLAB THICKNESS, REINFORCING, AND ELEVATIONS, PRIOR TO SAWCUTTING OR REMOVAL. CONTRACTOR SHALL MAINTAIN STABILITY OF ADJACENT SLAB AND COORDINATE FINAL ELEVATIONS, JOINT ALIGNMENT, AND SAWCUT LOCATIONS IN THE FIELD.
11. EXTENT OF EXISTING SLAB REMOVAL SHALL BE A MINIMUM OF 3'-0" BEYOND THE EDGE OF THE PROPOSED ELECTRICAL BUILDING AND CONCRETE STAIRS, TYPICAL. CONTRACTOR SHALL COORDINATE EXACT REMOVAL LIMITS AND BUILDING LOCATIONS WITH CIVIL DRAWINGS AND VERIFY ALL DIMENSIONS AND LAYOUT IN THE FIELD PRIOR TO DEMOLITION. STRUCTURAL DRAWINGS INDICATE GENERAL INTENT ONLY.

NO.	DATE	REVISION	APP.

IDS Engineering Group
13430 NW. Freeway, Suite 700
Houston, Tx. 77040
713.462.3178
TxEng Firm 2726 / TxSurv Firm 10110700

CONCEPT ENGINEERS
TX. FIRM REGISTRATION # F-04417
Structures for the whole community

PRELIMINARY
NOT FOR CONSTRUCTION, BIDDING, OR PERMIT PURPOSES.
FOR REVIEW ONLY.
DAVID MOORE
TEXAS LICENSE NO. 139405
Date: 05/08/26

CITY OF HOUSTON
DEPARTMENT OF PUBLIC WORKS AND ENGINEERING

LIFT STATION RENEWAL AND REPLACEMENT FY 2023

LOCKWOOD LIFT STATION NATURAL GAS GENERATOR FOUNDATION

WBS NUMBER	FOR CITY OF HOUSTON USE ONLY
R-000267-0179-3	
DRAWING SCALE	
AS NOTED	
CITY OF HOUSTONPM	
NAWARAJ PANTA, P.E.	
DWG. NO. LCK-S-07	SHEET NO. 38 OF 361

IDS JOB No. 0057-085-00

PLOTTED: 5/21/2019 1:28 PM

NATURAL GAS GENERATOR NOTES:

1. CUMMINS C500N6B NATURAL GAS GENERATOR, 500 KW / 625 KVA STANDBY, APPROX. 25'-5 3/4" LONG x 7'-6" WIDE x 9'-8" HIGH ENCLOSURE. DESIGN GENERATOR OPERATING WEIGHT = 21,000 LBS MIN. VERIFY FINAL DIMENSIONS, WEIGHT, CENTER OF GRAVITY, ANCHORAGE, AND SERVICE CLEARANCES WITH APPROVED MANUFACTURER SUBMITTAL.
2. GENERATOR ANCHORAGE SHALL BE COORDINATED WITH THE FINAL MANUFACTURER-CERTIFIED GENERATOR SUBMITTAL. ANCHOR SIZE, EMBEDMENT, EDGE DISTANCE, AND LOCATION SHALL NOT BE BASED SOLELY ON PRELIMINARY OUTLINE DRAWINGS. ANY DEVIATION FROM THE BASIS-OF-DESIGN GENERATOR WEIGHT, FOOTPRINT, ANCHOR LAYOUT, OR BASE REACTIONS SHALL BE SUBMITTED TO THE E.O.R. FOR REVIEW PRIOR TO INSTALLATION.

NO.	DATE	REVISION	APP.

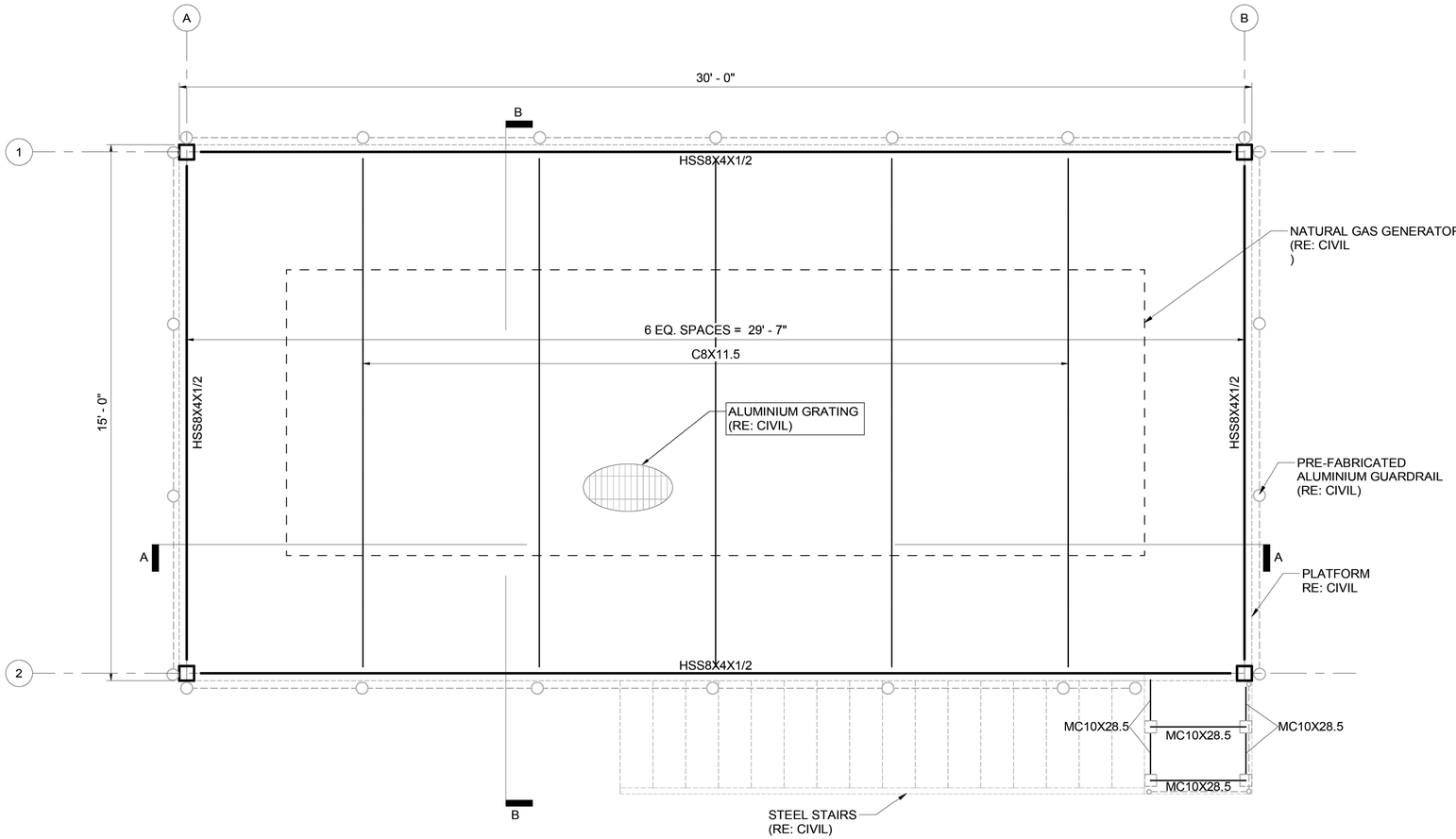

1 NATURAL GAS GENERATOR - FRAMING PLAN
1/2" = 1'-0"

IDS Engineering Group
13430 NW. Freeway, Suite 700
Houston, Tx. 77040
713.462.3178
TxEng Firm 2726 / TxSurv Firm 10110700

CONCEPT ENGINEERS
TX. FIRM REGISTRATION # F-04417
Structures for the whole community

PRELIMINARY
NOT FOR CONSTRUCTION,
BIDDING, OR PERMIT PURPOSES.
FOR REVIEW ONLY.
DAVID MOORE
TEXAS LICENSE NO. 139405
Date: 05/08/26

CITY OF HOUSTON
DEPARTMENT OF PUBLIC WORKS AND ENGINEERING

LIFT STATION RENEWAL AND REPLACEMENT FY 2023
LOCKWOOD LIFT STATION NATURAL GAS GENERATOR FRAMING

WBS NUMBER	FOR CITY OF HOUSTON USE ONLY
R-000267-0179-3	
DRAWING SCALE	
AS NOTED	
CITY OF HOUSTONPM	
NAWARAJ PANTA, P.E.	
SHEET NO. 39 OF 361	

DWG. NO. LCK-S-08

IDS JOB No. 0057-085-00

FILE PATH: G:\COMMERCIAL PROJECTS\24137 - Lift Station Rehab & Construction\STRUCTURAL\JV_DWGS\XREF\24137-TBlock.dwg

PLOTTED: 5/21/2019 1:28 PM

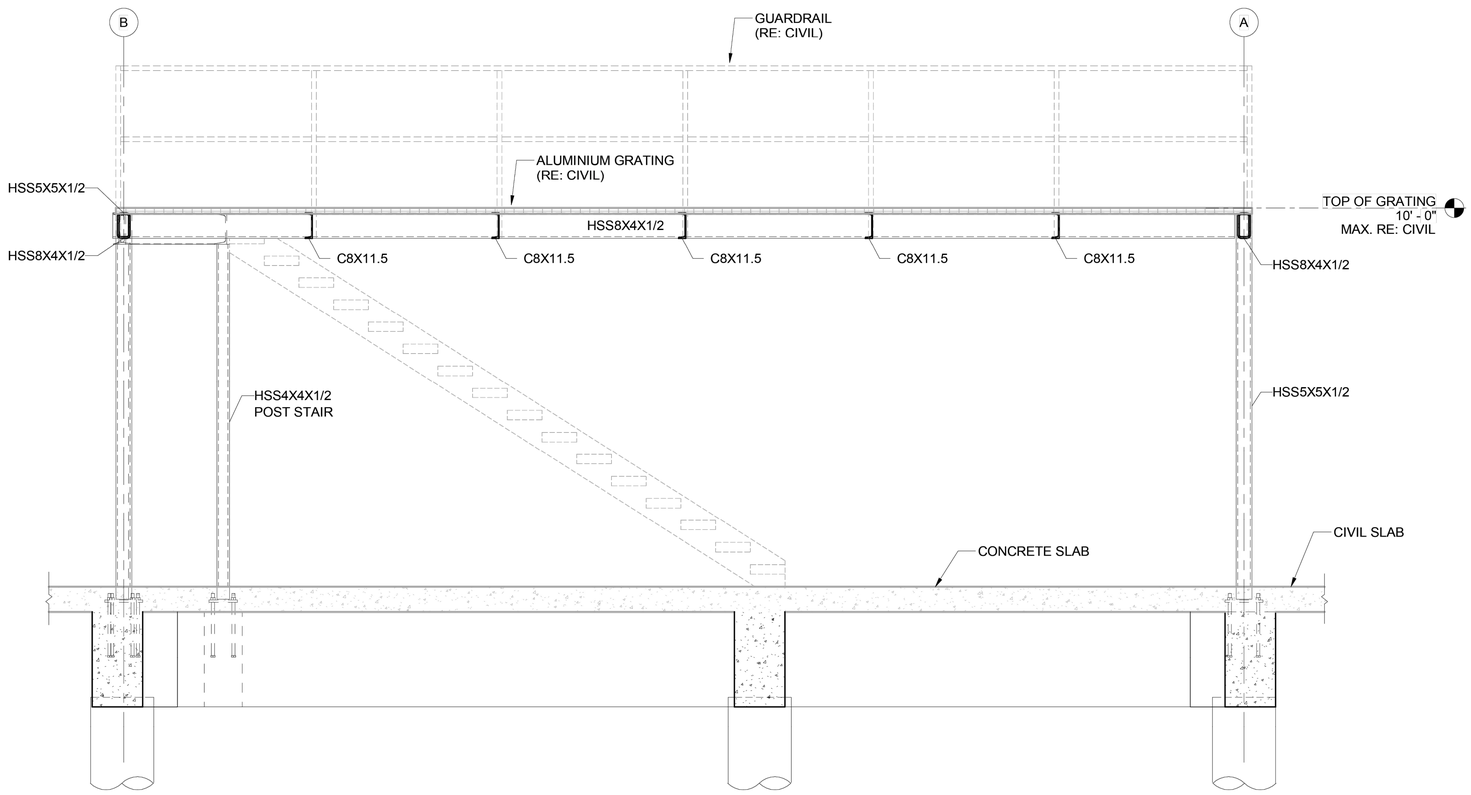

1 NATURAL GAS GENERATOR SECTION A - A

1/2" = 1'-0"

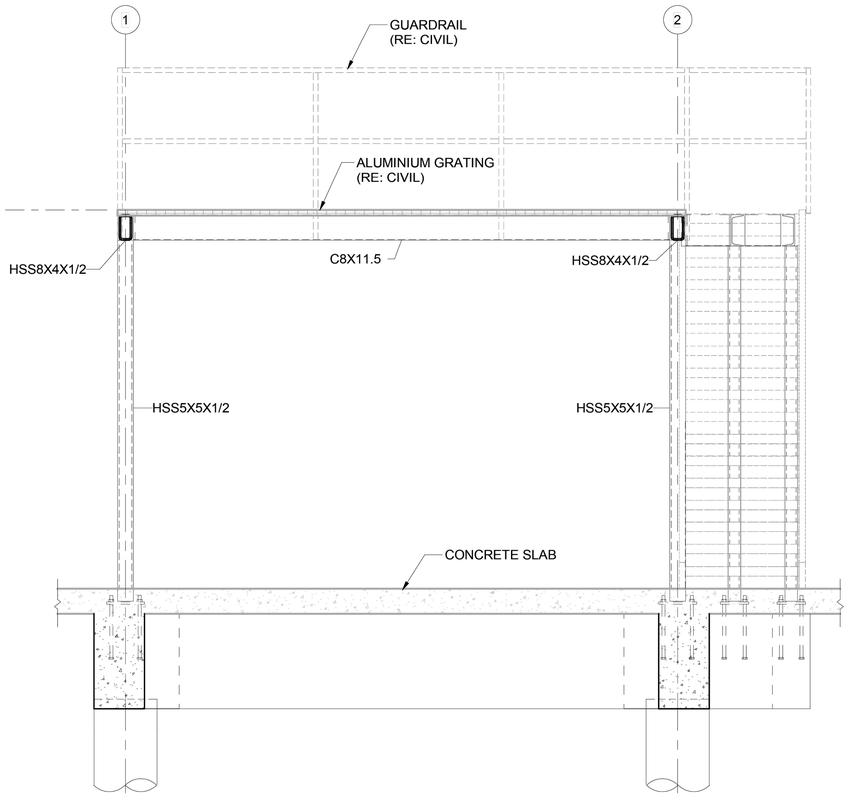

2 NATURAL GAS GENERATOR SECTION B - B

1/2" = 1'-0"

NO.	DATE	REVISION	APP.

IDS Engineering Group
13430 NW. Freeway, Suite 700
Houston, Tx. 77040
713.462.3178
TxEng Firm 2726 / TxSurv Firm 10110700

CONCEPT ENGINEERS
TX. FIRM REGISTRATION # F-04417
Structures for the whole community

PRELIMINARY
NOT FOR CONSTRUCTION,
BIDDING, OR PERMIT PURPOSES.
FOR REVIEW ONLY.
DAVID MOORE
TEXAS LICENSE NO. 139405

Date: 05/08/26

CITY OF HOUSTON
DEPARTMENT OF PUBLIC WORKS AND ENGINEERING

LIFT STATION RENEWAL AND REPLACEMENT FY 2023

LOCKWOOD LIFT STATION NATURAL GAS GENERATOR SECTIONS

WBS NUMBER	FOR CITY OF HOUSTON USE ONLY
R-000267-0179-3	
DRAWING SCALE	
AS NOTED	
CITY OF HOUSTONPM	
DWG. NO. NAWARAJ PANTA, P.E.	
LCK-S-09 SHEET NO. 40 OF 361	

IDS JOB No. 0057-085-00

FILE PATH: G:\COMMERCIAL PROJECTS\24137 - Lift Station Rehab & Construction\STRUCTURAL\V_DWGS\XREF\24137-TBlock.dwg

PLOTTED: 5/21/2019 1:28 PM

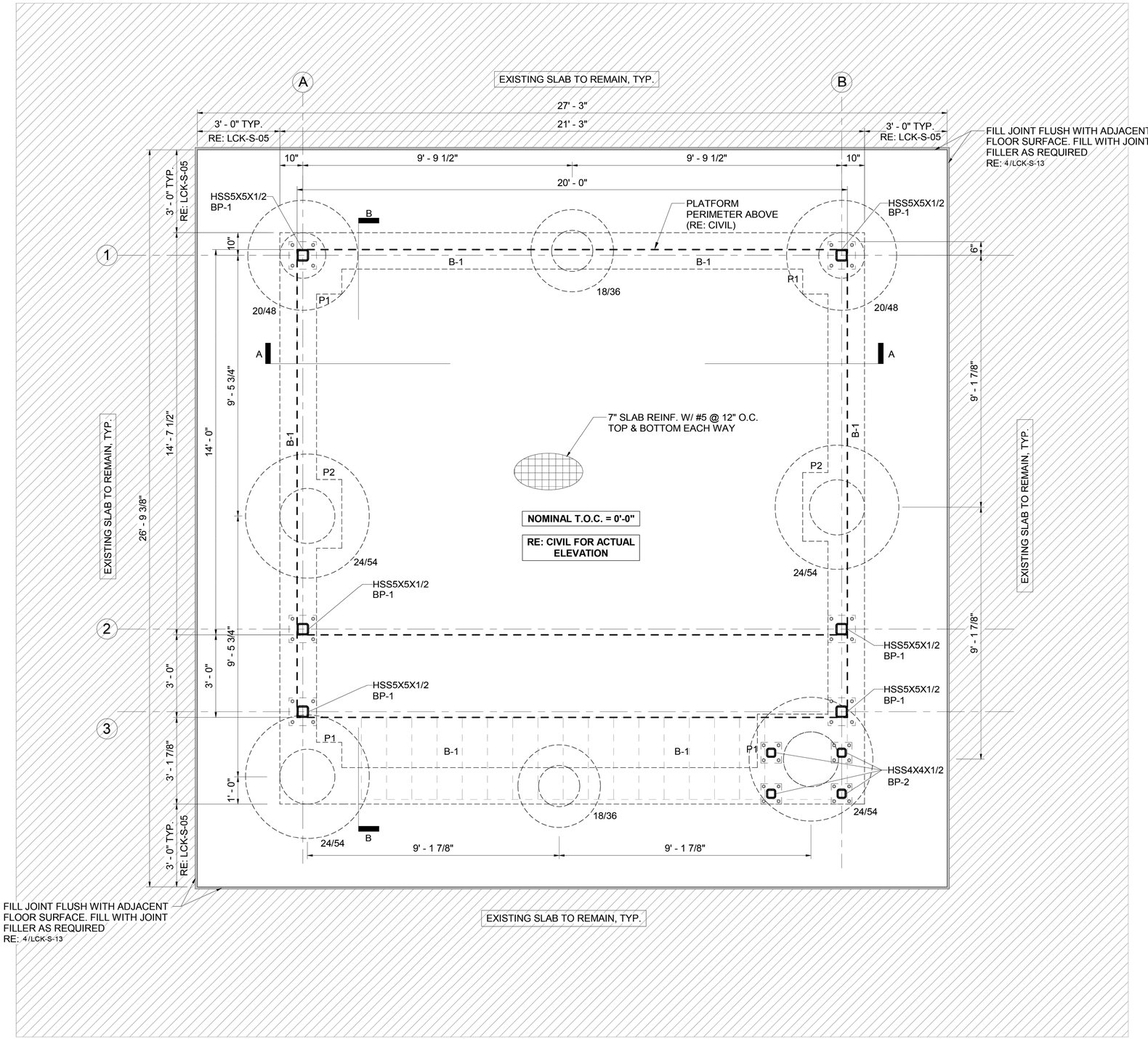

FOUNDATION NOTES:

1. CENTER ALL DRILLED-AND-UNDERREAMED PIERS UNDER CENTERLINE OF STEEL COLUMN. IF NO STEEL COLUMN IS SHOWN, CENTER DRILLED-AND-UNDERREAMED PIERS UNDER CENTER OF GRADE BEAM.
2. ALL STEEL TO BE HOT DIPPED GALVANIZED.
3. FINISH FLOOR ELEVATION = 0'-0". FINISH FLOOR ELEVATION OF NEW STRUCTURAL SLAB TO MATCH ELEVATION OF EXISTING SLAB. RE: CIVIL FOR ACTUAL ELEVATION.
4. "P1" AS SHOWN ON PLAN INDICATES CONCRETE PEDESTAL TYPE P1. THE TOP ELEVATION OF ALL PEDESTALS IS AT -1'-0" TYP U.N.O. REFER TO LCK-S-14 FOR DIMENSIONS & REINF.
5. "B1" AS SHOWN ON PLAN INDICATES CONCRETE BEAM TYPE B1. THE TOP ELEVATION OF ALL BEAMS IS AT -1'-0" TYP U.N.O. REFER TO LCK-S-14 FOR BEAM SCHEDULE AND DETAILS.
6. "20/48" AS SHOWN ON PLAN INDICATES A DRILLED-AND-UNDERREAMED PIER WITH A 20 INCH DIAMETER SHAFT AND 48-INCH DIAMETER UNDERREAM/BELL. BOTTOM OF UNDERREAM/BELL SHALL BEAR A MINIMUM OF 18'-0" BELOW EXISTING GRADE, UNLESS NOTED OTHERWISE. AT -3'-0", TYP, U.N.O. RE: LCK-S-14 FOR DRILLED-AND-UNDERREAMED PIERS SCHEDULE AND DETAILS.
7. DRILLED-AND-UNDERREAMED PIERS SHALL BE CONSTRUCTED IN ACCORDANCE WITH THE GEOTECHNICAL REPORT BY HVJ ASSOCIATES, INC., REPORT NO. HGT2210460.1.1(A), DATED 03/31/2026. CONTRACTOR SHALL PROVIDE CASING, DEWATERING, AND/OR OTHER TEMPORARY SUPPORT METHODS AS REQUIRED TO MAINTAIN STABILITY OF DRILLED PIER EXCAVATIONS.
8. REFER TO CIVIL, MECHANICAL, ELECTRICAL, AND PLUMBING DRAWINGS FOR DIMENSIONS AND LOCATIONS OF EQUIPMENT, SLOPES, DEPRESSED AREAS, PIPES, CONDUITS, AND OTHER ITEMS NOT SHOWN ON STRUCTURAL DRAWINGS.
9. (*) INDICATES BEAMS WITH VARYING DEPTHS. RE: SECTION
10. PORTION OF EXISTING SLAB-ON-GRADE TO BE REMOVED SHALL BE REPLACED WITH NEW STRUCTURAL SLAB AS SHOWN ON PLAN IN THIS SHEET. CONTRACTOR SHALL VERIFY EXISTING CONDITIONS, INCLUDING SLAB THICKNESS, REINFORCING, AND ELEVATIONS, PRIOR TO SAWCUTTING OR REMOVAL. CONTRACTOR SHALL MAINTAIN STABILITY OF ADJACENT SLAB AND COORDINATE FINAL ELEVATIONS, JOINT ALIGNMENT, AND SAWCUT LOCATIONS IN THE FIELD.
11. EXTENT OF EXISTING SLAB REMOVAL SHALL BE A MINIMUM OF 3'-0" BEYOND THE EDGE OF THE PROPOSED ELECTRICAL BUILDING AND CONCRETE STAIRS, TYPICAL. CONTRACTOR SHALL COORDINATE EXACT REMOVAL LIMITS AND BUILDING LOCATIONS WITH CIVIL DRAWINGS AND VERIFY ALL DIMENSIONS AND LAYOUT IN THE FIELD PRIOR TO DEMOLITION. STRUCTURAL DRAWINGS INDICATE GENERAL INTENT ONLY.

NO.	DATE	REVISION	APP.

1 ELECTRICAL FOUNDATION PLAN
1/2" = 1'-0"

IDS Engineering Group
13430 NW. Freeway, Suite 700
Houston, Tx. 77040
713.462.3178
TxEng Firm 2726 / TxSurv Firm 10110700

CONCEPT ENGINEERS
TX. FIRM REGISTRATION # F-04417
Structures for the whole community

PRELIMINARY
NOT FOR CONSTRUCTION, BIDDING, OR PERMIT PURPOSES.
FOR REVIEW ONLY.
DAVID MOORE
TEXAS LICENSE NO. 139405
Date: 05/08/26

CITY OF HOUSTON
DEPARTMENT OF PUBLIC WORKS AND ENGINEERING

LIFT STATION RENEWAL AND REPLACEMENT FY 2023
LOCKWOOD LIFT STATION ELECTRICAL CONTROL BUILDING FOUNDATION

WBS NUMBER	FOR CITY OF HOUSTON USE ONLY
R-000267-0179-3	
DRAWING SCALE	
AS NOTED	
CITY OF HOUSTONPM	
NAWARAJ PANTA, P.E.	
DWG. NO. LCK-S-10	SHEET NO. 41 OF 361

IDS JOB No. 0057-085-00

FILE PATH: G:\COMMERCIAL PROJECTS\24137 - Lift Station Rehab & Construction\STRUCTURAL\V_DWGS\XREF\24137-TBlock.dwg

PLOTTED: 5/21/2019 1:28 PM

FILE PATH: G:\COMMERCIAL PROJECTS\24137 - Lift Station Rehab & Construction\STRUCTURAL\JV_DWGS\XREF\24137-TBlock.dwg

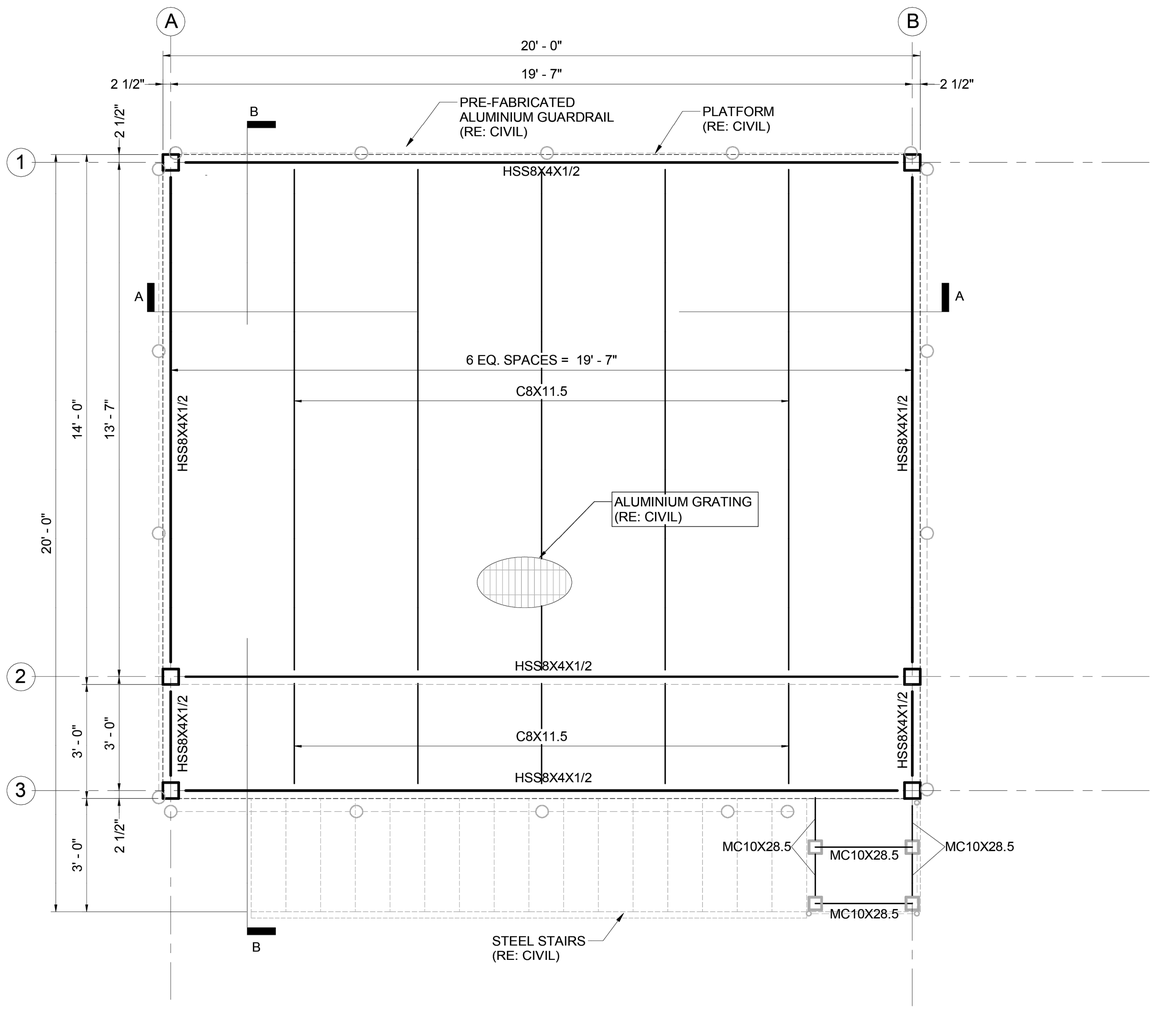

1 ELECTRICAL FRAMING PLAN

1/2" = 1'-0"

NO.	DATE	REVISION	APP.

IDS Engineering Group
13430 NW. Freeway, Suite 700
Houston, Tx. 77040
713.462.3178
TxEng Firm 2726 / TxSurv Firm 10110700

CONCEPT ENGINEERS
TX. FIRM REGISTRATION # F-04417
Structures for the whole community

PRELIMINARY
NOT FOR CONSTRUCTION,
BIDDING, OR PERMIT PURPOSES.
FOR REVIEW ONLY.
DAVID MOORE
TEXAS LICENSE NO. 139405

Date: 05/08/26

CITY OF HOUSTON

DEPARTMENT OF PUBLIC WORKS AND ENGINEERING

LIFT STATION RENEWAL AND REPLACEMENT FY 2023

LOCKWOOD LIFT STATION ELECTRICAL CONTROL BUILDING FRAMING

WBS NUMBER	FOR CITY OF HOUSTON USE ONLY
R-000267-0179-3	
DRAWING SCALE	
AS NOTED	
CITY OF HOUSTONPM	
NAWARAJ PANTA, P.E.	

DWG. NO.	SHEET NO.
LCK-S-11	42 OF 361

IDS JOB No. 0057-085-00

PLOTTED: 5/21/2019 1:28 PM

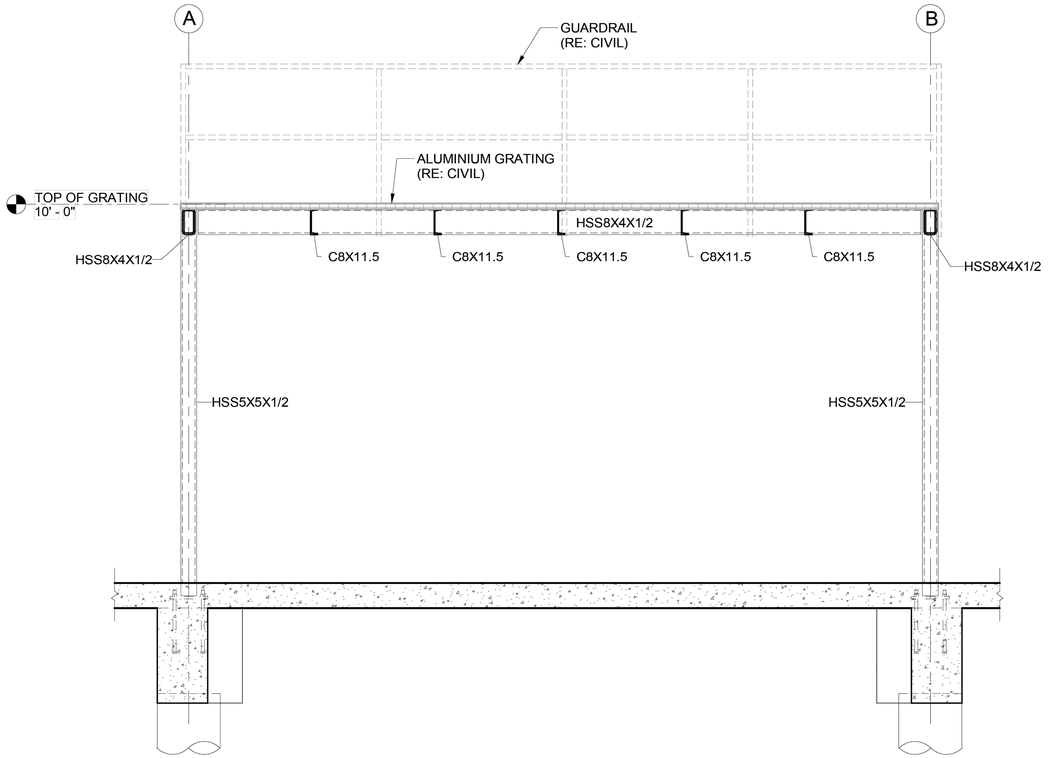

1 ELECTRICAL CONTROL BUILDING SECTION A - A

1/2" = 1'-0"

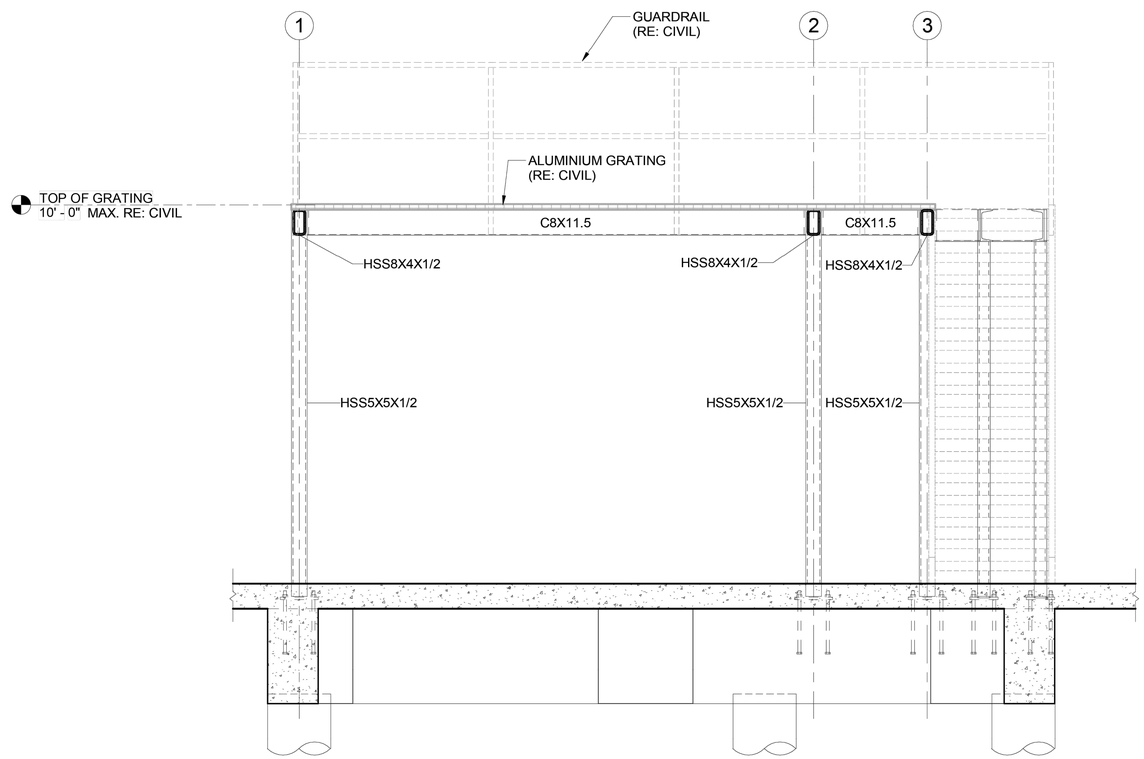

2 ELECTRICAL CONTROL BUILDING SECTION B - B

1/2" = 1'-0"

NO.	DATE	REVISION	APP.

IDS Engineering Group
13430 NW. Freeway, Suite 700
Houston, Tx. 77040
713.462.3178
TxEng Firm 2726 / TxSurv Firm 10110700

CONCEPT ENGINEERS
TX. FIRM REGISTRATION # F-04417
Structures for the whole community

PRELIMINARY
NOT FOR CONSTRUCTION,
BIDDING, OR PERMIT PURPOSES.
FOR REVIEW ONLY.
DAVID MOORE
TEXAS LICENSE NO. 139405

Date: 05/08/26

CITY OF HOUSTON
DEPARTMENT OF PUBLIC WORKS AND ENGINEERING

LIFT STATION RENEWAL AND REPLACEMENT FY 2023

LOCKWOOD LIFT STATION ELECTRICAL CONTROL BUILDING SECTIONS

WBS NUMBER	FOR CITY OF HOUSTON USE ONLY
R-000267-0179-3	
DRAWING SCALE	
AS NOTED	
CITY OF HOUSTONPM	
NAWARAJ PANTA, P.E.	

DWG. NO.	SHEET NO. 43 OF 361
LCK-S-12	

IDS JOB No. 0057-085-00

FILE PATH: G:\COMMERCIAL PROJECTS\24137 - Lift Station Rehab & Construction\STRUCTURAL\JV_DWGS\XREF\24137-TBlock.dwg

PLOTTED: 5/21/2019 1:28 PM

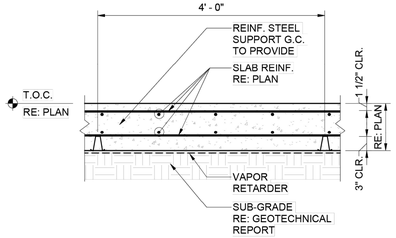

1 TYPICAL SLAB SECTION DETAIL

3/4" = 1'-0"

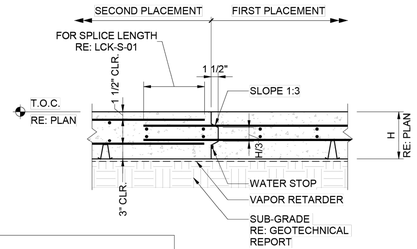

NOTE:
MAXIMUM 80 FEET BETWEEN CONSTRUCTION JOINTS AND 72 HOURS MINIMUM BETWEEN ADJACENT PLACEMENTS.

2 TYPICAL CONSTRUCTION JOINT

3/4" = 1'-0"

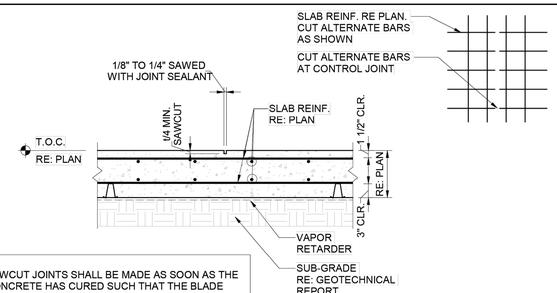

NOTE:
1. SAWCUT JOINTS SHALL BE MADE AS SOON AS THE CONCRETE HAS CURED SUCH THAT THE BLADE DOES NOT DISLODGE. DO NOT WAIT MORE THAN 8 HOURS AFTER CONCRETE HAS SET.
2. STOP ALTERNATE BARS 6" FROM SAWCUT.
3. CUT ALTERNATE BARS.

3 TYPICAL SLAB CONTROL JOINT

3/4" = 1'-0"

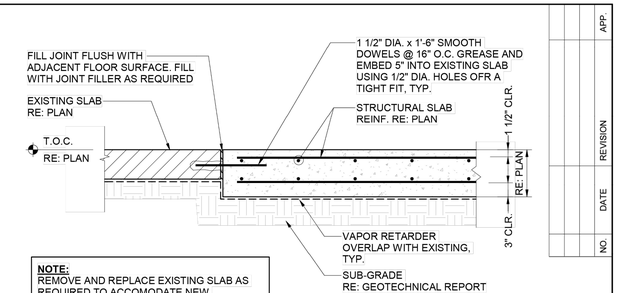

NOTE:
REMOVE AND REPLACE EXISTING SLAB AS REQUIRED TO ACCOMODATE NEW STRUCTURAL SLAB. RE: LCK-S-05 FOR LOCATIONS OF EXISTING SLAB TO BE REMOVED.

4 TYP NEW TO EXISTING SLAB CONSTRUCTION JOINT

NO SCALE

NO.	DATE	REVISION	APP.

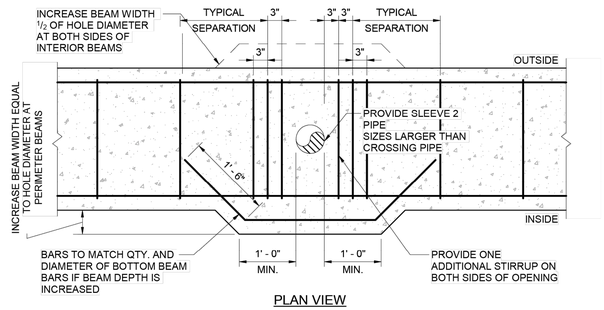

PLAN VIEW

5 VERT. PIPE OPENING LARGER THAN 3" THRU GD. BM.

3/4" = 1'-0"

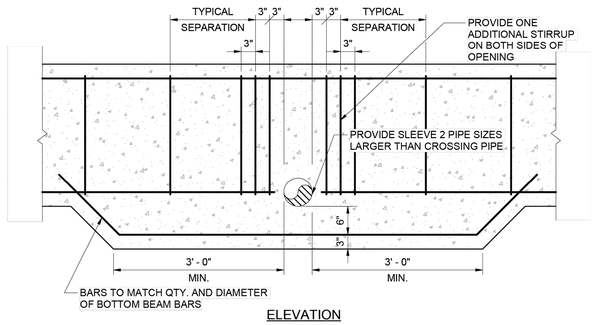

ELEVATION

6 PIPE OPENING THRU GD. IN CONFLICT W/BOT. REINF.

3/4" = 1'-0"

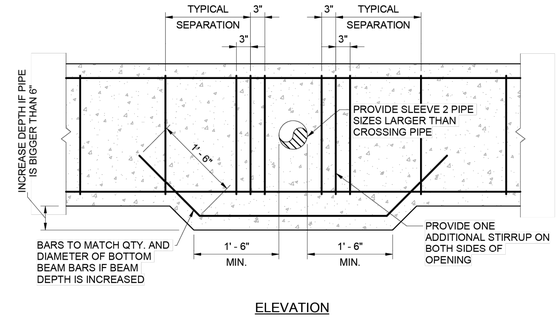

ELEVATION

7 TYP. DETAIL PIPE OPENING THRU GRADE BEAM

3/4" = 1'-0"

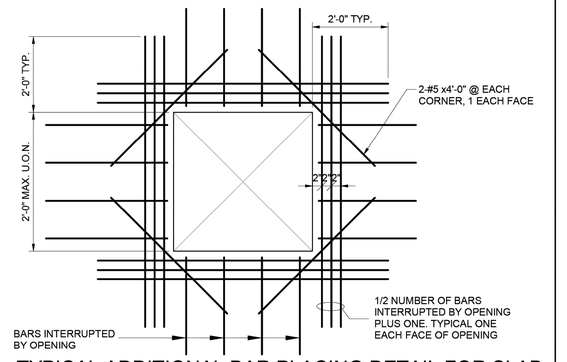

8 TYPICAL ADDITIONAL BAR PLACING DETAIL FOR SLAB

3/4" = 1'-0"

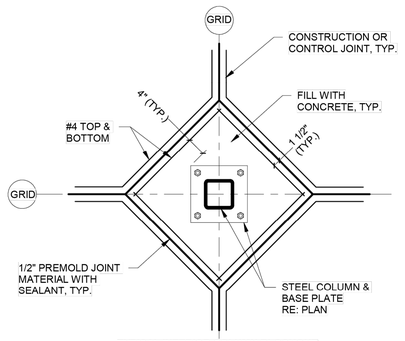

TYPICAL INTERIOR COLUMN BLOCKOUT

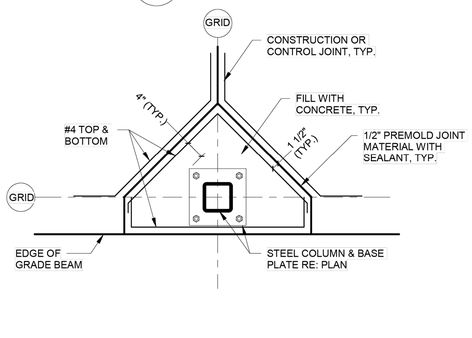

TYPICAL EXTERIOR COLUMN BLOCKOUT

9 TYPICAL BLOCKOUT DETAIL

3/4" = 1'-0"

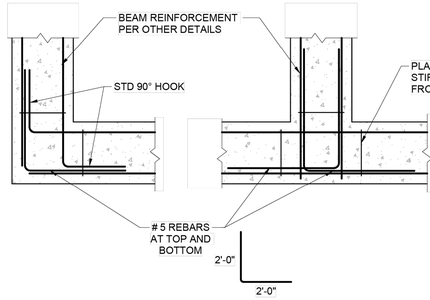

10 TYP. BAR PLACING DETAILS

3/4" = 1'-0"

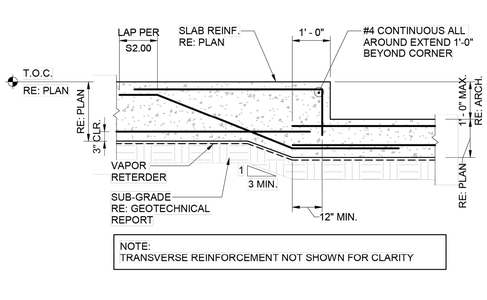

NOTE:
TRANSVERSE REINFORCEMENT NOT SHOWN FOR CLARITY

11 TYP. SLAB DEPRESSION DETAIL

1/2" = 1'-0"

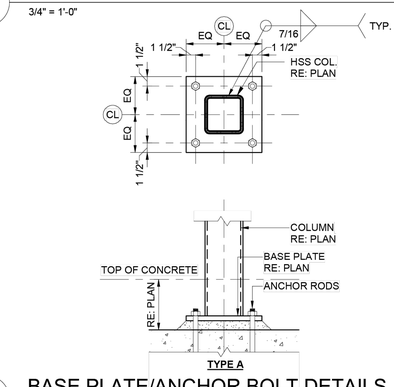

TYPE A

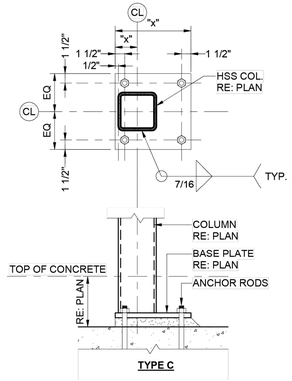

TYPE C

12 BASE PLATE/ANCHOR BOLT DETAILS

1" = 1'-0"

BASE PLATE AND ANCHOR BOLT SCHEDULE

PLATE NUMBER	PLATE TYPE	PLATE THICNESS	PLATE Fy	PLATE DIM	ANCHOR BOLT TYPE	ANCHOR BOLT ⌀	ANCHOR BOLT LENGTH (L)
BP-1	TYPE A	3/4"	36 ksi	12"X12"	TYPE 1	3/4"	18"
BP-2	TYPE B	3/4"	36 ksi	9"X9"	TYPE 1	3/4"	18"

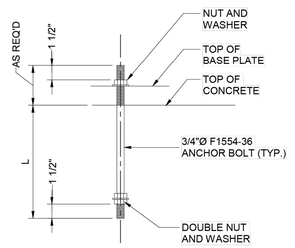

ANCHOR BOLT ELEVATION

IDS Engineering Group
13430 NW. Freeway, Suite 700
Houston, Tx. 77040
713.462.3178
TxEng Firm 2726 / TxSurv Firm 10110700

CONCEPT ENGINEERS
TX. FIRM REGISTRATION # F-04417
Structures for the whole community

PRELIMINARY
NOT FOR CONSTRUCTION, BIDDING, OR PERMIT PURPOSES.
FOR REVIEW ONLY.
DAVID MOORE
TEXAS LICENSE NO. 139405
Date: 05/08/26

CITY OF HOUSTON
DEPARTMENT OF PUBLIC WORKS AND ENGINEERING

LIFT STATION RENEWAL AND REPLACEMENT FY 2023

LOCKWOOD LIFT STATION TYPICAL FOUNDATION DETAILS

WBS NUMBER	FOR CITY OF HOUSTON USE ONLY
R-000267-0179-3	
DRAWING SCALE	
AS NOTED	
CITY OF HOUSTONPM	
NAWARAJ PANTA, P.E.	
DWG. NO. LCK-S-13	SHEET NO. 44 OF 361

IDS JOB No. 0057-085-00

FILE PATH: G:\COMMERCIAL PROJECTS\24137 - Lift Station Rehab & Construction\STRUCTURAL\JV_DWGS\XREF\24137-TBlock.dwg

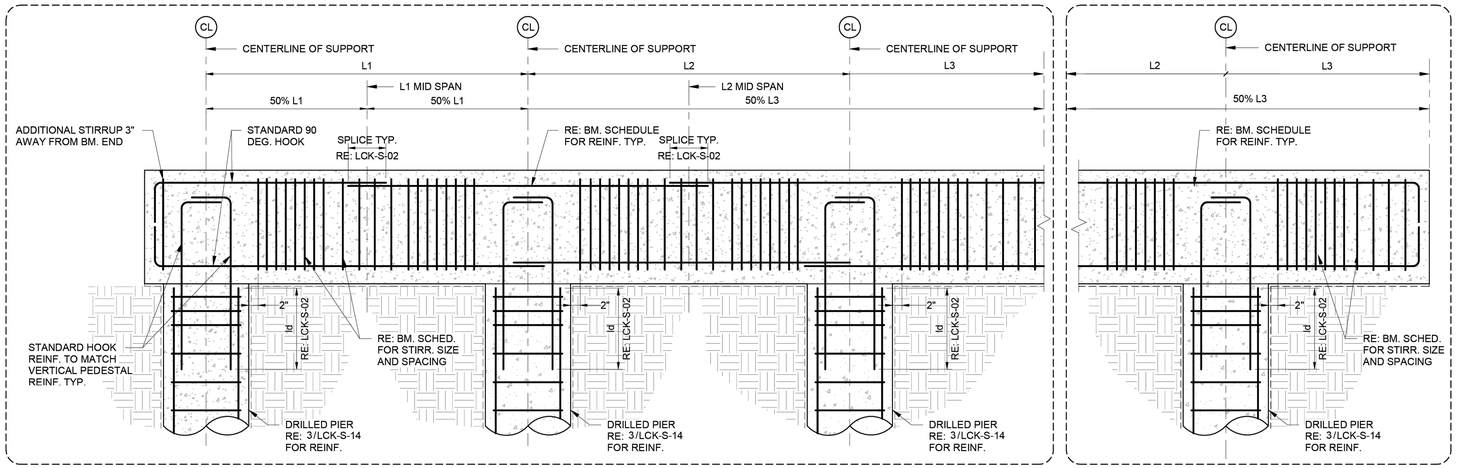

SECTION AT CONTINUOUS BEAM

SECTION AT CANTILEVERED BEAM

1 TYPICAL REINFORCEMENT SPLICE DETAIL AT BEAM (NEW DETAIL)1

3/4" = 1'-0"

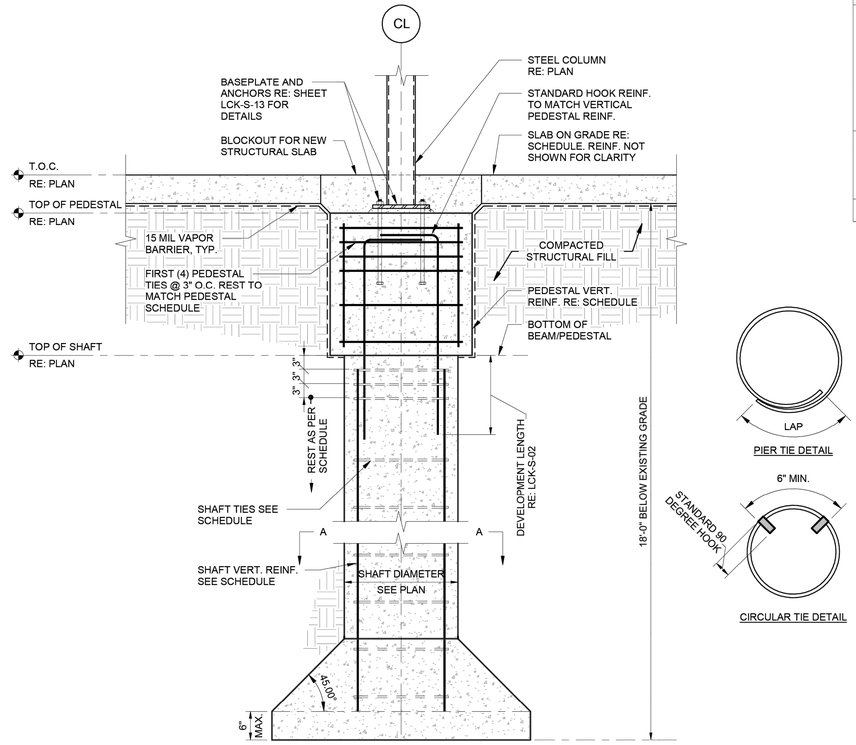

PEDESTAL SCHEDULE			
TAG	VERT. REINF.	CLOSED TIES	NOTES
TYPE P1	(12) #6	#4 @ 10" O.C.	TOP 4- #4 CLOSED TIES @ 3" O.C., REST @ 10" O.C.
TYPE P2	(12) #6	#4 @ 10" O.C.	TOP 4- #4 CLOSED TIES @ 3" O.C., REST @ 10" O.C.
TYPE P3	(12) #6	#4 @ 10" O.C.	TOP 4- #4 CLOSED TIES @ 3" O.C., REST @ 10" O.C.

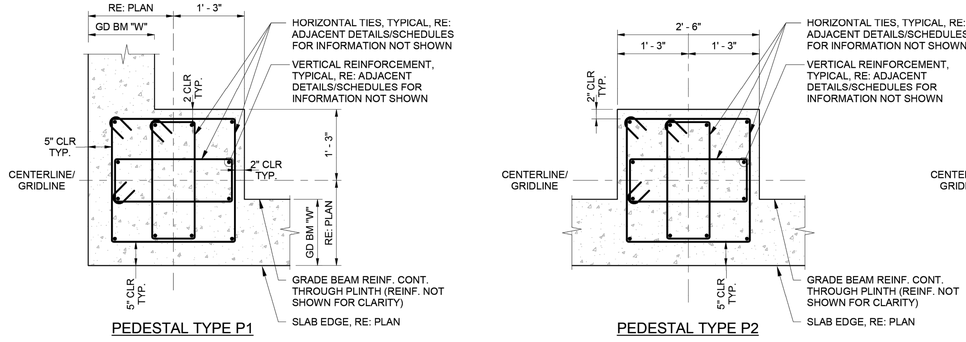

2 TYP. PEDESTAL DETAILS/SCHEDULE

3/4" = 1'-0"

3 TYPICAL DRILLED PIER DETAIL

3/4" = 1'-0"

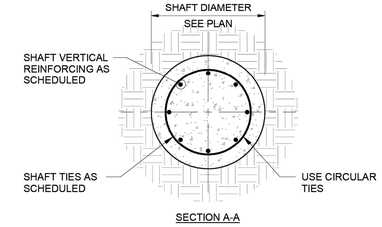

SECTION A-A

DRILLED SHAFT SCHEDULE		
SHAFT DIAMETER	VERTICAL REINF.	CLOSED TIES
18"	(6) #6	#4 @ 10" O.C.
24"	(8) #7	#4 @ 10" O.C.
30"	(9) #8	#4 @ 10" O.C.
36"	(10) #9	#4 @ 10" O.C.

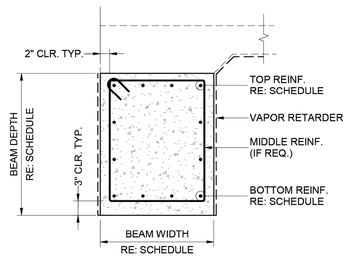

BEAM SCHEDULE						
TAG	WIDTH	DEPTH	TOP REINFORCEMENT	MIDDLE REINFORCEMENT	BOTTOM REINFORCEMENT	STIRRUPS
B1	1'-4"	2'-6"	(4) #7	-	(4) #7	#4 @ 10" O.C. (3 @ 3" O.C., REST @ 10" O.C.)
B2	1'-0"	2'-6"	(3) #7	-	(3) #7	#4 @ 10" O.C. (3 @ 3" O.C., REST @ 10" O.C.)
B3	2'-4"	2'-6"	(6) #7	-	(6) #7	#4 @ 10" O.C. (3 @ 3" O.C., REST @ 10" O.C.)

4 BEAM SCHEDULE1

3/4" = 1'-0"

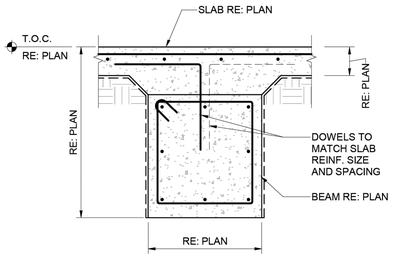

5 SECTION AT INTERIOR BEAM1

3/4" = 1'-0"

REVISION			
NO.	DATE	REVISION	APP.

IDS Engineering Group
13430 NW. Freeway, Suite 700
Houston, Tx. 77040
713.462.3178
TxEng Firm 2726 / TxSurv Firm 10110700

CONCEPT ENGINEERS
TX. FIRM REGISTRATION # F-04417
Structures for the whole community

PRELIMINARY
NOT FOR CONSTRUCTION, BIDDING, OR PERMIT PURPOSES.
FOR REVIEW ONLY.
DAVID MOORE
TEXAS LICENSE NO. 139405
Date: 05/08/26

CITY OF HOUSTON
DEPARTMENT OF PUBLIC WORKS AND ENGINEERING

LIFT STATION RENEWAL AND REPLACEMENT FY 2023

LOCKWOOD LIFT STATION FOUNDATION DETAILS & SCHEDULES

WBS NUMBER	FOR CITY OF HOUSTON USE ONLY
R-000267-0179-3	
DRAWING SCALE	
AS NOTED	
CITY OF HOUSTONPM	
NAWARAJ PANTA, P.E.	
DWG. NO. LCK-S-14	SHEET NO. 45 OF 361

IDS JOB No. 0057-085-00

PLOTTED: 5/21/2019 1:28 PM

FILE PATH: G:\COMMERCIAL PROJECTS\24137 - Lift Station Rehab & Construction\STRUCTURAL\V_DWGS\XREF\24137-TBlock.dwg

PLOTTED: 5/21/2019 1:28 PM

SINGLE SHEAR PLATE CONNECTION SCHEDULE					
BEAM	BOLTS	DIAMETER	GRADE	PLATE	WELD
W6x	2	5/8"	A325	1/4"	3/16" FILLET
W8x	2	3/4"	A325	1/4"	3/16" FILLET
W10x	3	3/4"	A325	1/4"	3/16" FILLET
W12x	3	7/8"	A325	5/16"	1/4" FILLET
W14x	3	7/8"	A325	5/16"	1/4" FILLET
W16x	4	7/8"	A325	5/16"	1/4" FILLET
W18x	5	7/8"	A325	5/16"	1/4" FILLET
W21x	6	7/8"	A325	3/8"	5/16" FILLET
W24x	6	7/8"	A325	3/8"	5/16" FILLET

1 CONNECTION SCHEDULE
3/4" = 1'-0"

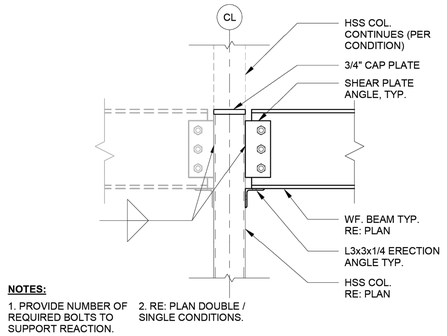

NOTES:
1. PROVIDE NUMBER OF REQUIRED BOLTS TO SUPPORT REACTION.
2. RE: PLAN DOUBLE / SINGLE CONDITIONS.

2 TYP. BM. TO COL. SHEAR CONNECTION
1" = 1'-0"

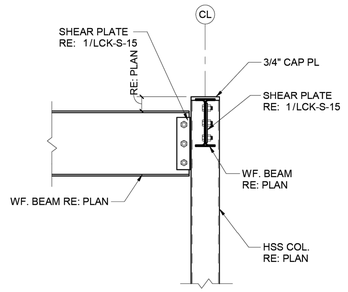

3 BM./COL. CONNECTION DET.
3/4" = 1'-0"

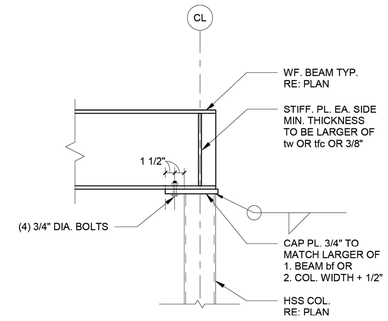

4 TYP. BEAM OVER COLUMN CONNECTION
1" = 1'-0"

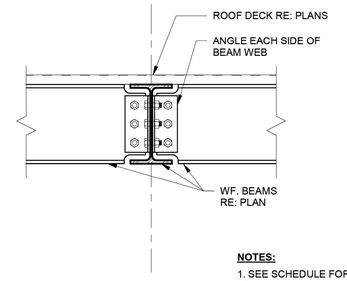

NOTES:
1. SEE SCHEDULE FOR MORE INFORMATION.

5 TYP. BEAM TO BEAM CONNECTION
1" = 1'-0"

NOTES:
SEE CONNECTION SCHEDULE FOR INFO. NOT SHOWN

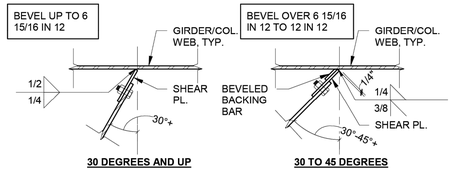

30 DEGREES AND UP | **30 TO 45 DEGREES**

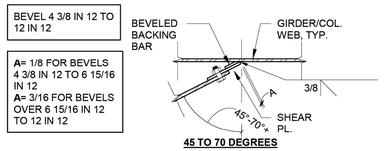

45 TO 70 DEGREES

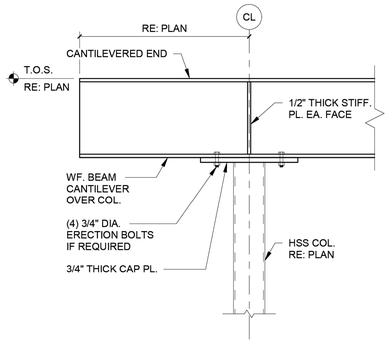

7 TYP. CANTILEVERED STL. BM.
1" = 1'-0"

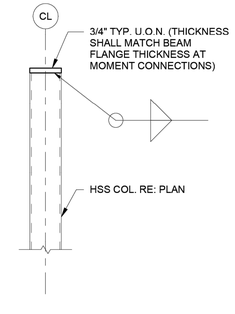

8 TYP. HSS COLUMN CAP PLATE
1" = 1'-0"

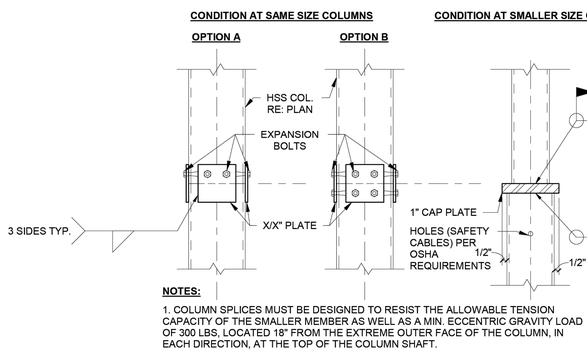

NOTES:
1. COLUMN SPLICES MUST BE DESIGNED TO RESIST THE ALLOWABLE TENSION CAPACITY OF THE SMALLER MEMBER AS WELL AS A MIN. ECCENTRIC GRAVITY LOAD OF 300 LBS, LOCATED 18" FROM THE EXTREME OUTER FACE OF THE COLUMN, IN EACH DIRECTION, AT THE TOP OF THE COLUMN SHAFT.

9 TYP. HSS COLUMN SPLICE DETAILS
1 1/2" = 1'-0"

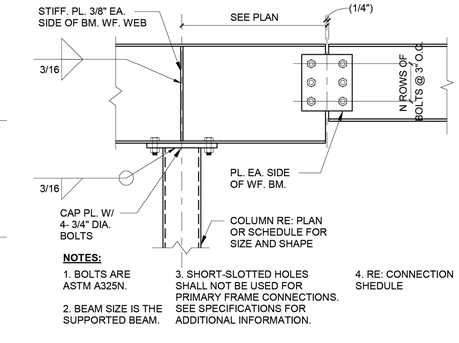

NOTES:
1. BOLTS ARE ASTM A325N.
2. BEAM SIZE IS THE SUPPORTED BEAM.
3. SHORT-SLOTTED HOLES SHALL NOT BE USED FOR PRIMARY FRAME CONNECTIONS. SEE SPECIFICATIONS FOR ADDITIONAL INFORMATION.
4. RE: CONNECTION SHEDULE

10 TYP. BEAM. SPLICE CONNX.
1" = 1'-0"

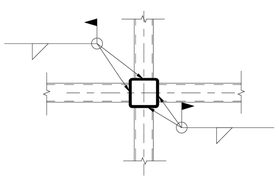

TYP. HSS BEAM TO HSS COL. (PLAN)

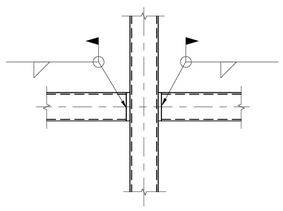

TYP. HSS BEAM TO HSS COL. (SECTION)

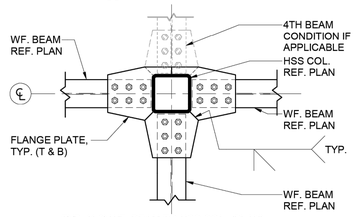

TYP. (4-3) WF. BEAM TO HSS COL. (PLAN)

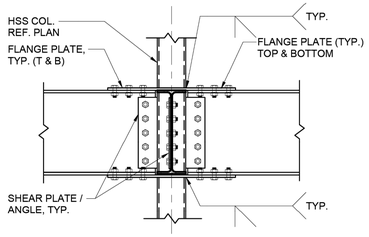

TYP. (4-3) WF. BEAM TO HSS COL. (SECTION)

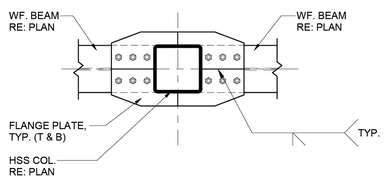

TYP. (2) WF. BEAM TO HSS COL. (PLAN)

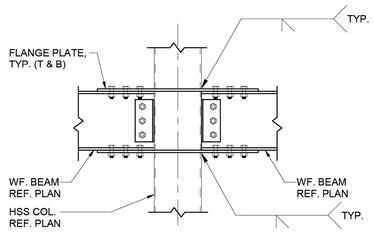

TYP. (2) WF. BEAM TO HSS COL. (SECTION)

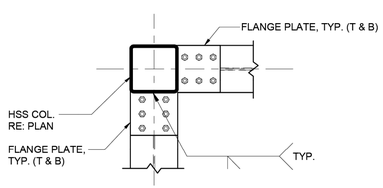

TYP. WF. BEAM TO HSS COL. CORNER (PLAN)

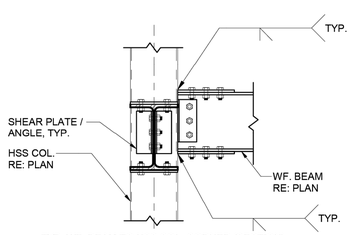

TYP. WF. BEAM TO HSS COL. CORNER (SECTION)

NOTES:
1. BOLTS IN WEB CONNECTION SHALLBE SNUG TIGHTENED PRIOR TO WELDING OF FLANGES.
2. SLIP-CRITICAL BOLTED CONNECTION IN WEB USING A325 BOLTS IN HORIZONTAL SHORT-SLOTTED HOLES U.N.O. RESISTANCE BY BOLTS TO SHEAR SHALL BE BY FRICTION, PROPORTIONED USING THE STANDARD HOLE VALUE ON A CLASS "A" SURFACE.
3. REFER TO SPECIFICATIONS FOR CONNECTION DESIGN CRITERIA.
4. PROVIDE PREDESIGNED SHEAR CONNECTIONS AS SHOWN IN AISC LRFD MANUAL WHERE APPLICABLE.
5. IF MOMENT IS SHOWN ON DRAWINGS, PARTIAL PENETRATION WELD TO DEVELOP MOMENT CAN BE USED IN LIEU OF CJP WELD. FOR THIS CASE, WELD SHALL BE REQUIRED TO DEVELOP THE BEAM FLANGE FORCE COMPUTED AS FOLLOWS: Pu= (Mu)/(0.95D).
WHERE: Mu= DESIGN MOMENT (KIP-IN).
D= BEAM DEPTH (INCHES).
Pu= BEAM FLANGE FORCE (KIPS).

11 TYP. MOMENT CONNECTIONS
3/4" = 1'-0"

IDS Engineering Group
13430 NW. Freeway, Suite 700
Houston, Tx. 77040
713.462.3178
TxEng Firm 2726 / TxSurv Firm 10110700

CONCEPT ENGINEERS
TX. FIRM REGISTRATION # F-04417
Structures for the whole community

PRELIMINARY
NOT FOR CONSTRUCTION, BIDDING, OR PERMIT PURPOSES.
FOR REVIEW ONLY.
DAVID MOORE
TEXAS LICENSE NO. 139405
Date: 05/08/26

CITY OF HOUSTON
DEPARTMENT OF PUBLIC WORKS AND ENGINEERING

LIFT STATION RENEWAL AND REPLACEMENT FY 2023
LOCKWOOD LIFT STATION
TYPICAL STEEL DETAILS

WBS NUMBER	FOR CITY OF HOUSTON USE ONLY
R-000267-0179-3	
DRAWING SCALE	
AS NOTED	
CITY OF HOUSTONPM	
NAWARAJ PANTA, P.E.	
DWG. NO. LCK-S-15	SHEET NO. 46 OF 361

IDS JOB No. 0057-085-00

NO.	DATE	REVISION	APP.

FILE PATH: G:\COMMERCIAL PROJECTS\24137 - Lift Station Rehab & Construction\STRUCTURAL\JV_DWGS\XREF\24137-TBlock.dwg

PLOTTED: 5/21/2019 1:28 PM

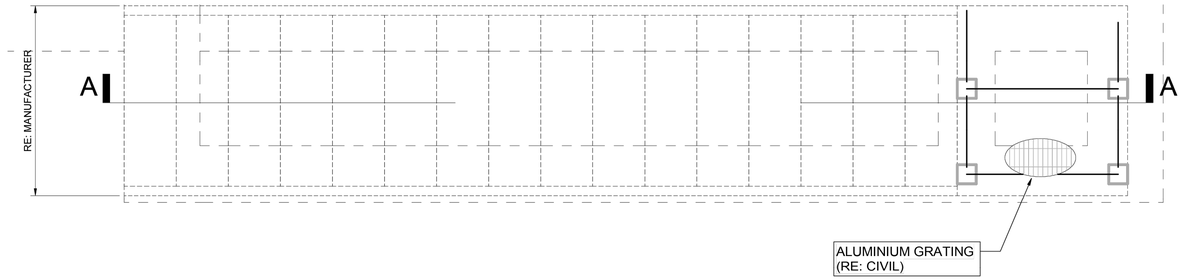

1 STAIR LAYOUT PLAN

3/4" = 1'-0"

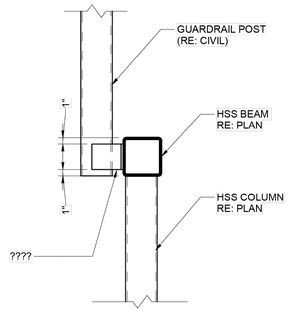

3 HSS BEAM TO HSS COLUMN CONNECTION

1" = 1'-0"

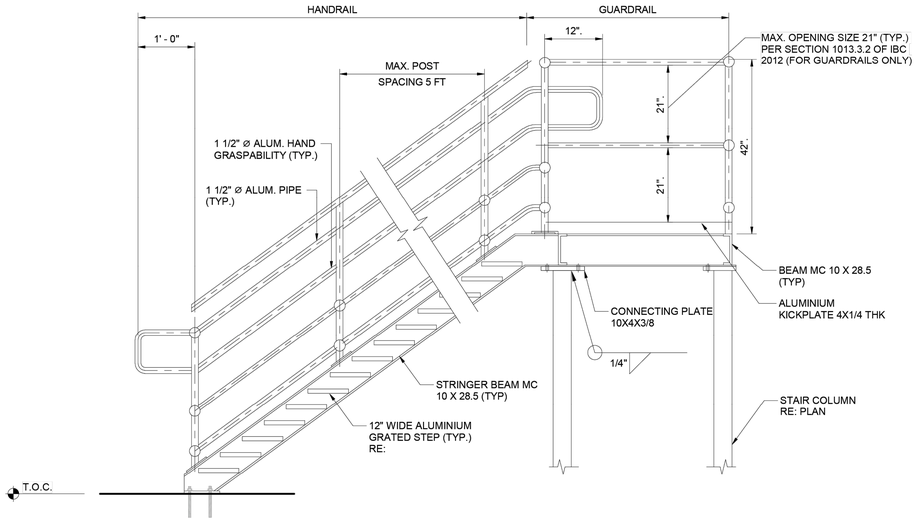

2 SECTION A - A

3/4" = 1'-0"

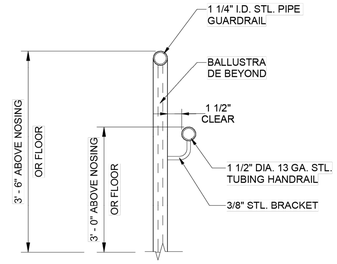

4 HANDRAIL AND GUARDRAIL SECTION

1 1/2" = 1'-0"

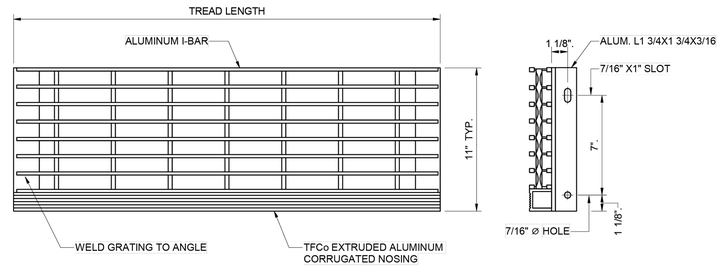

5 STAIR TREAD CONNECTION ON STRINGER BEAM

1" = 1'-0"

NO.	DATE	REVISION	APP.

IDS Engineering Group
13430 NW. Freeway, Suite 700
Houston, Tx. 77040
713.462.3178
TxEng Firm 2726 / TxSurv Firm 10110700

CONCEPT ENGINEERS
TX. FIRM REGISTRATION # F-04417
Structures for the whole community

PRELIMINARY
NOT FOR CONSTRUCTION, BIDDING, OR PERMIT PURPOSES.
FOR REVIEW ONLY.
DAVID MOORE
TEXAS LICENSE NO. 139405
Date: 05/08/26

CITY OF HOUSTON
DEPARTMENT OF PUBLIC WORKS AND ENGINEERING

LIFT STATION RENEWAL AND REPLACEMENT FY 2023

LOCKWOOD LIFT STATION STAIR DETAILS

WBS NUMBER	FOR CITY OF HOUSTON USE ONLY
R-000267-0179-3	
DRAWING SCALE	
AS NOTED	
CITY OF HOUSTONPM	
NAWARAJ PANTA, P.E.	
DWG. NO. LCK-S-16	SHEET NO. 47 OF 361

IDS JOB No. 0057-085-00

FILE PATH: G:\COMMERCIAL PROJECTS\24137 - Lift Station Rehab & Construction\STRUCTURAL\JV_DWGS\XREF\24137-TBlock.dwg

PLOTTED: 5/12/2026 8:24 PM

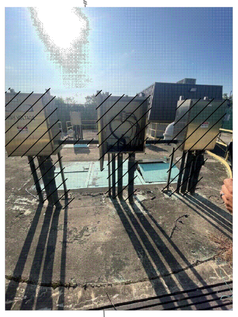

EXISTING PUMP J-BOX NO.1,NO.2,NO.3,NO.4,NO.5,NO.6

PHOTOGRAPH A - (2) NTS



EXISTING WIMAX BOX

PHOTOGRAPH B - (3) NTS



EXISTING WEATHERHEAD, SERVICE DISCONNECT & METER

PHOTOGRAPH F - (8) NTS



EXISTING CAMERA POLE

PHOTOGRAPH C - (4) NTS



EXISTING WIMAX POLE

PHOTOGRAPH D - (5) NTS

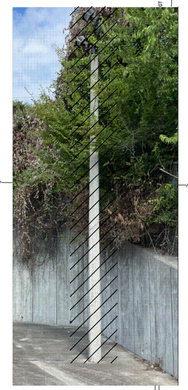

EXISTING LIGHT POLE

PHOTOGRAPH E - (1) NTS



EXISTING ELECTRICAL EQUIPMENT (IN EXISTING ELECTRICAL BUILDING)

PHOTOGRAPH E - (6) NTS



EXISTING ELECTRICAL TRANSFORMER POLE

PHOTOGRAPH E - (7) NTS

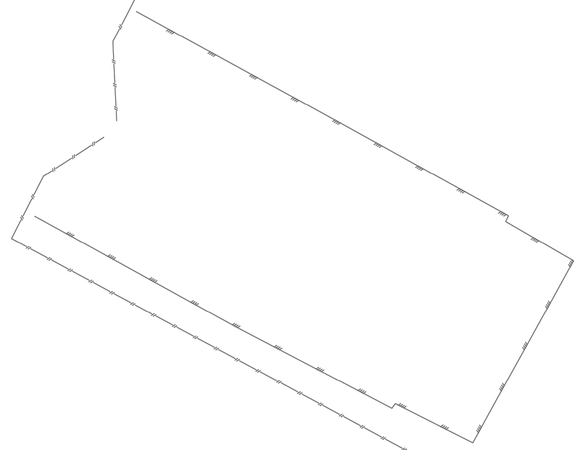

LOCKWOOD ELECTRICAL EXISTING SITE PLAN

1"= 8'-0"

SCALE: 1"= 8'

0' 8' 16' 24'

NO.	DATE	REVISION	APP.

NOTES BY SYMBOL "(#)":

1. EXISTING LIGHT POLE TO BE DEMOLISHED AND REMOVED.
2. EXISTING PUMP J-BOXES FOR NO.1, NO.2, NO.3, NO.4, NO.5, NO.6 PUMPS TO BE DEMOLISHED AND REMOVED.
3. EXISTING WIMAX BOX TO BE DEMOLISHED AND REMOVED.
4. EXISTING CAMERA POLE TO BE DEMOLISHED AND REMOVED.
5. EXISTING WIMAX POLE TO BE DEMOLISHED AND REMOVED.
6. EXISTING MCC, CONTROL PANEL, POWER FACTOR CORRECTION CAPACITORS, SWITCHBOARD, LIGHTING PANEL, LIGHTING TRANSFORMER, LIGHTING, AND ASSOCIATED CONDUITS AND WIRES IN ELECTRICAL BUILDING TO BE DEMOLISHED AND REMOVED.
7. EXISTING ELECTRICAL TRANSFORMER POLE TO BE DEMOLISHED AND REMOVED.
8. EXISTING WEATHERHEAD, SERVICE DISCONNECT, & METER TO BE DEMOLISHED AND REMOVED.

GENERAL NOTES:

1. THE OWNER HAS THE RIGHT OF FIRST REFUSAL TO THE EQUIPMENT BEING REMOVED. CONTRACTOR SHALL DELIVER THE EQUIPMENT WHICH OWNER WISHES TO KEEP AT LOCATION DESIGNATED BY THE OWNER. SEE SPECIFICATIONS SECTION 16060 FOR ELECTRICAL DEMOLITION.

FOR INTERIM REVIEW
ONLY NOT INTENDED FOR
PERMIT, BIDDING OR
CONSTRUCTION PURPOSES.
ENGINEER:
HOSS FOROUZAN
P.E. SERIAL NO.77748
05/18/2026

GAI
Gupta & Associates, Inc.
CONSULTING ENGINEERING
Registration No. F-2593
302 Dennis St.,
Houston, Texas 77006
Tel: 713-636-2936
Fax: 713-636-2987
email: hforouzan@gaiconsulting.com

IDS Engineering Group
13430 NW. Freeway
Suite 700
Houston, Tx. 77040
713.462.3178
TxEng Firm 2726
TxSurv Firm 10110700

CITY OF HOUSTON
HOUSTON PUBLIC WORKS

LIFT STATION RENEWAL AND REPLACEMENT FY 2023

LOCKWOOD LIFT STATION ELECTRICAL DEMOLITION SITE PLAN

WBS NUMBER	FOR CITY OF HOUSTON USE ONLY
R-000267-0179-4	
DRAWING SCALE	
HORIZ:1"=8'-0" VERT1"-8'-0"	
CITY OF HOUSTON PM	
NAWARAJ PANTA, P.E.	
DWG. NO. LCK-E-01	SHEET NO. 48 OF 361

FILE PATH: O:\H8108_Lift Station Rehabilitation And Reconstruction (IDS)\6 Drawings\Electrical\Working\Lockwood\H8108_LCK-E-01.dwg

IDS JOB No. 0057-085-00

PLOTTED: 5/12/2026 8:24 PM

FILE PATH: O:\H8108_Lift Station Rehabilitation And Reconstruction (IDS)\6 Drawings\Electrical\Working\Lockwood\H8108_LCK-E-02.dwg

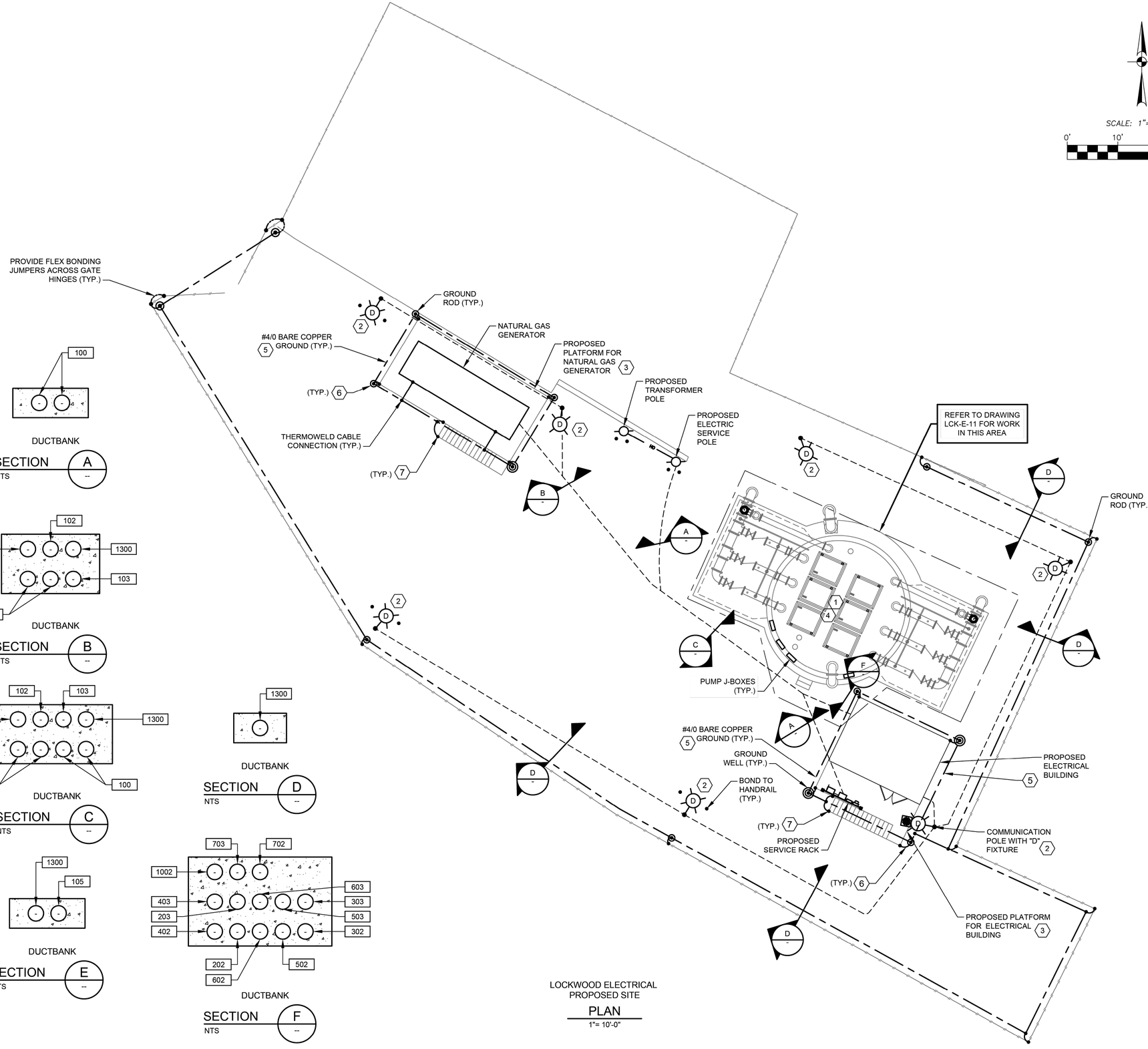

LOCKWOOD ELECTRICAL
PROPOSED SITE
PLAN
1"= 10'-0"

SCALE: 1"= 10'
0' 10' 20' 30'

NOTES:

1. THE ELECTRICAL INSTALLATION IN THE WET WELL SHALL BE EXPLOSION PROOF, IN ACCORDANCE WITH THE NATIONAL ELECTRICAL CODE FOR CLASS I, DIVISION 1 LOCATIONS.
2. YARD LIGHT CONTROLLED BY LIGHTING SWITCH.
3. REFER TO THE ASSOCIATED STRUCTURE DRAWINGS FOR THE PLATFORM DETAILS.
4. INSIDE WETWELL RATED NEMA CLASS , DIV. 1, OUTSIDE ABOVE GROUND, AROUND WETWELL RATED CLASS 1, DIV. 2 ACCORDING TO NFPA 820.
5. GROUNDING LOOP SHALL BE BURIED 30" BELOW FINISHED GRADE.
6. #4/0 BARE COPPER GROUND TO BE BONDED TO PLATFORM STRUCTURAL STEEL.
7. #4/0 BARE COPPER GROUND TO BE BONDED TO HANDRAIL.

GENERAL NOTES:

1. NO ELECTRICAL MATERIAL, APPARATUS, DEVICES, APPLIANCES, FIXTURES, OR EQUIPMENT SHALL BE SOLD OR INSTALLED IN THE CITY UNLESS THEY ARE IN CONFORMANCE WITH THE PROVISIONS OF SECTION 508 CITY OF HOUSTON ELECTRICAL CODE, THE LAWS OF THE STATE OF TEXAS AND ANY APPLICABLE RULES AND REGULATIONS ISSUED UNDER THE AUTHORITY OF THE STATE STATUES. THE MAKER'S NAME, TRADEMARK, OR OTHER IDENTIFICATION SYMBOL SHALL BE PLACED ON ALL ELECTRICAL MATERIALS, APPARATUS, DEVICES, APPLIANCES, FIXTURES, AND EQUIPMENT USED OR INSTALLED UNDER THE PROVISIONS OF THIS CODE. ALL ELECTRICAL MATERIALS AND EQUIPMENT SHALL BE LISTED AND LABELED FOR THE INTENDED USE AND SHALL BE INCLUDED IN A LIST PUBLISHED BY AN APPROVAL AGENCY.

DUCTBANK
SECTION A
NTS

DUCTBANK
SECTION B
NTS

DUCTBANK
SECTION C
NTS

DUCTBANK
SECTION D
NTS

DUCTBANK
SECTION E
NTS

DUCTBANK
SECTION F
NTS

FOR INTERIM REVIEW
ONLY NOT INTENDED FOR
PERMIT, BIDDING OR
CONSTRUCTION PURPOSES.
ENGINEER:
HOSS FOROUZAN
P.E. SERIAL NO.77748
05/18/2026

GAI
Gupta & Associates, Inc.
CONSULTING ENGINEERING
Registration No. F-2593
302 Dennis St.,
Houston, Texas 77006
Tel: 713-636-2936
Fax: 713-636-2987
email: hforouzan@gaiconsulting.com

IDS Engineering Group
13430 NW. Freeway
Suite 700
Houston, Tx. 77040
713.462.3178
TxEng Firm 2726
TxSurv Firm 10110700

CITY OF HOUSTON
HOUSTON PUBLIC WORKS

LIFT STATION RENEWAL
AND REPLACEMENT FY 2023

LOCKWOOD LIFT STATION
PROPOSED ELECTRICAL
SITE PLAN

WBS NUMBER	FOR CITY OF HOUSTON USE ONLY
R-000267-0179-4	
DRAWING SCALE	
HORIZ AS NOTED VERT AS NOTED	
CITY OF HOUSTON PM	
NAWARAJ PANTA, P.E.	
DWG. NO. LCK-E-02	SHEET NO. 49 OF 361

NO.	DATE	REVISION	APP.

IDS JOB No. 0057-085-00

PLOTTED: 5/12/2026 8:24 PM

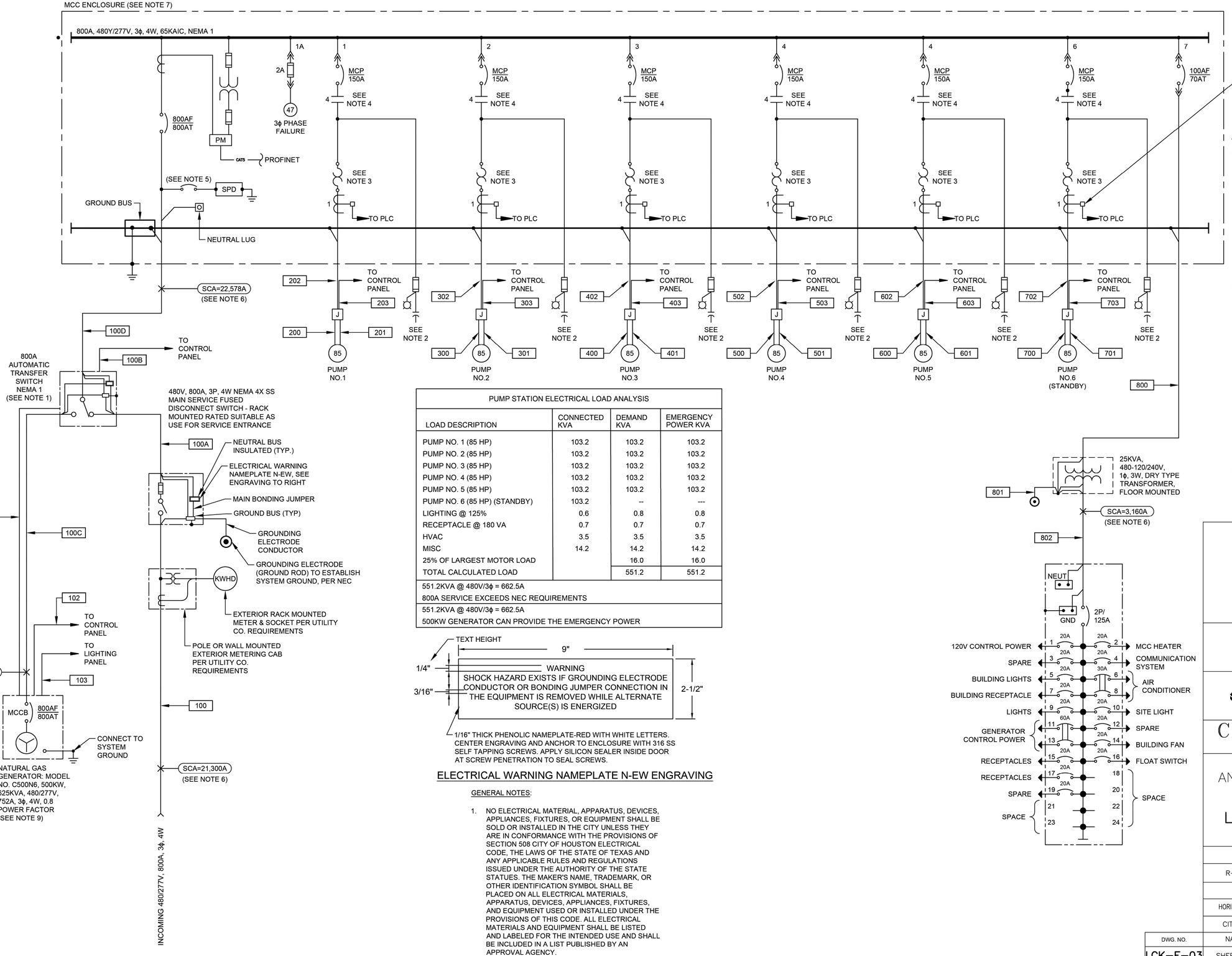

PUMP STATION ELECTRICAL LOAD ANALYSIS			
LOAD DESCRIPTION	CONNECTED KVA	DEMAND KVA	EMERGENCY POWER KVA
PUMP NO. 1 (85 HP)	103.2	103.2	103.2
PUMP NO. 2 (85 HP)	103.2	103.2	103.2
PUMP NO. 3 (85 HP)	103.2	103.2	103.2
PUMP NO. 4 (85 HP)	103.2	103.2	103.2
PUMP NO. 5 (85 HP)	103.2	103.2	103.2
PUMP NO. 6 (85 HP) (STANDBY)	103.2	--	---
LIGHTING @ 125%	0.6	0.8	0.8
RECEPTACLE @ 180 VA	0.7	0.7	0.7
HVAC	3.5	3.5	3.5
MISC	14.2	14.2	14.2
25% OF LARGEST MOTOR LOAD		16.0	16.0
TOTAL CALCULATED LOAD		551.2	551.2
551.2KVA @ 480V/3ϕ = 662.5A			
800A SERVICE EXCEEDS NEC REQUIREMENTS			
551.2KVA @ 480V/3ϕ = 662.5A			
500KW GENERATOR CAN PROVIDE THE EMERGENCY POWER			

1/16" THICK PHENOLIC NAMEPLATE-RED WITH WHITE LETTERS. CENTER ENGRAVING AND ANCHOR TO ENCLOSURE WITH 316 SS SELF TAPPING SCREWS. APPLY SILICON SEALER INSIDE DOOR AT SCREW PENETRATION TO SEAL SCREWS.

ELECTRICAL WARNING NAMEPLATE N-EW ENGRAVING

GENERAL NOTES:

1. NO ELECTRICAL MATERIAL, APPARATUS, DEVICES, APPLIANCES, FIXTURES, OR EQUIPMENT SHALL BE SOLD OR INSTALLED IN THE CITY UNLESS THEY ARE IN CONFORMANCE WITH THE PROVISIONS OF SECTION 508 CITY OF HOUSTON ELECTRICAL CODE, THE LAWS OF THE STATE OF TEXAS AND ANY APPLICABLE RULES AND REGULATIONS ISSUED UNDER THE AUTHORITY OF THE STATE STATUES. THE MAKER'S NAME, TRADEMARK, OR OTHER IDENTIFICATION SYMBOL SHALL BE PLACED ON ALL ELECTRICAL MATERIALS, APPARATUS, DEVICES, APPLIANCES, FIXTURES, AND EQUIPMENT USED OR INSTALLED UNDER THE PROVISIONS OF THIS CODE. ALL ELECTRICAL MATERIALS AND EQUIPMENT SHALL BE LISTED AND LABELED FOR THE INTENDED USE AND SHALL BE INCLUDED IN A LIST PUBLISHED BY AN APPROVAL AGENCY.

NOTES:

1. PROVIDE 5A PRIMARY TO 4-20mA CURRENT TRANSDUCER.
2. CONTRACTOR TO COORDINATE POWER FACTOR CORRECTION CAPACITOR SIZE WITH PUMP MANUFACTURER. MINIMUM 95% POWER FACTOR CORRECTION AT FULL LOAD. MOUNT CAPACITORS EXTERNAL ABOVE MCC ON THE APPROPRIATE SECTION.
3. COMBINATION OF CT AND OVERLOAD RELAY AS REQUIRED.
4. STARTER NEMA SIZE 3 OR GREATER SHALL BE VACUUM TYPE.
5. PROVIDE BREAKER ACCORDING TO MANUFACTURER'S REQUIREMENTS.
6. POINT TO POINT METHOD IS USED FOR SHORT CIRCUIT CURRENT CALCULATION.
7. CONTRACTOR SHALL PROVIDE A PERMANENTLY AFFIXED LABEL (2" X 3") SHOWING THE AVAILABLE FAULT CURRENT AND CALCULATION DATE. THE LABEL SHALL BE BLUE LETTERING ON A CONTRASTING BACKGROUND.
8. THE INSULATION TYPES OF ALL ELECTRICAL CONDUCTOS USED IN THE PROJECT HAVE BEEN SPECIFIED IN ELECTRICAL SPECIFICATIONS (16120, 16121, AND 16122). THE TYPES OF CONDUITS USED IN THE PROJECT HAS BEEN SPECIFIED IN ELECTRICAL SPECIFICATIONS 16111.
9. THE INFORMATION IS PROVIDED BY GENERATOR MANUFACTURER (CUMMINS).
10. REFER TO INSTRUMENTATION DRAWINGS LCK-I-11, LCK-I-12, LCK-I-13, LCK-I-14, LCK-I-15, LCK-I-16 FOR PUMP CONTROL SCHEMATIC.

NO.	DATE	REVISION	APP.

FOR INTERIM REVIEW
ONLY NOT INTENDED FOR
PERMIT, BIDDING OR
CONSTRUCTION PURPOSES.
ENGINEER:
HOSS FOROUZAN
P.E. SERIAL NO.77748
05/18/2026

GAI
Gupta & Associates, Inc.
CONSULTING ENGINEERING
Registration No. F-2593
302 Dennis St.,
Houston, Texas 77006
Tel: 713-636-2936
Fax: 713-636-2987
email: hforouzan@gaiconsulting.com

IDS Engineering Group
13430 NW. Freeway
Suite 700
Houston, Tx. 77040
713.462.3178
TxEng Firm 2726
TxSurv Firm 10110700

CITY OF HOUSTON
HOUSTON PUBLIC WORKS

LIFT STATION RENEWAL AND REPLACEMENT FY 2023

LOCKWOOD LIFT STATION SINGLE LINE DIAGRAM

WBS NUMBER	FOR CITY OF HOUSTON USE ONLY
R-000267-0179-4	
DRAWING SCALE	
HORIZ: NONE VERT: NONE	
CITY OF HOUSTON PM	
NAWARAJ PANTA, P.E.	
SHEET NO. 50 OF 361	

DWG. NO. LCK-E-03

FILE PATH: O:\H8108_Lift Station Rehabilitation And Reconstruction (IDS)\6 Drawings\Electrical\Working\Lockwood\H8108_LCK-E-03.dwg

IDS JOB No. 0057-085-00

PLOTTED: 5/12/2026 8:25 PM

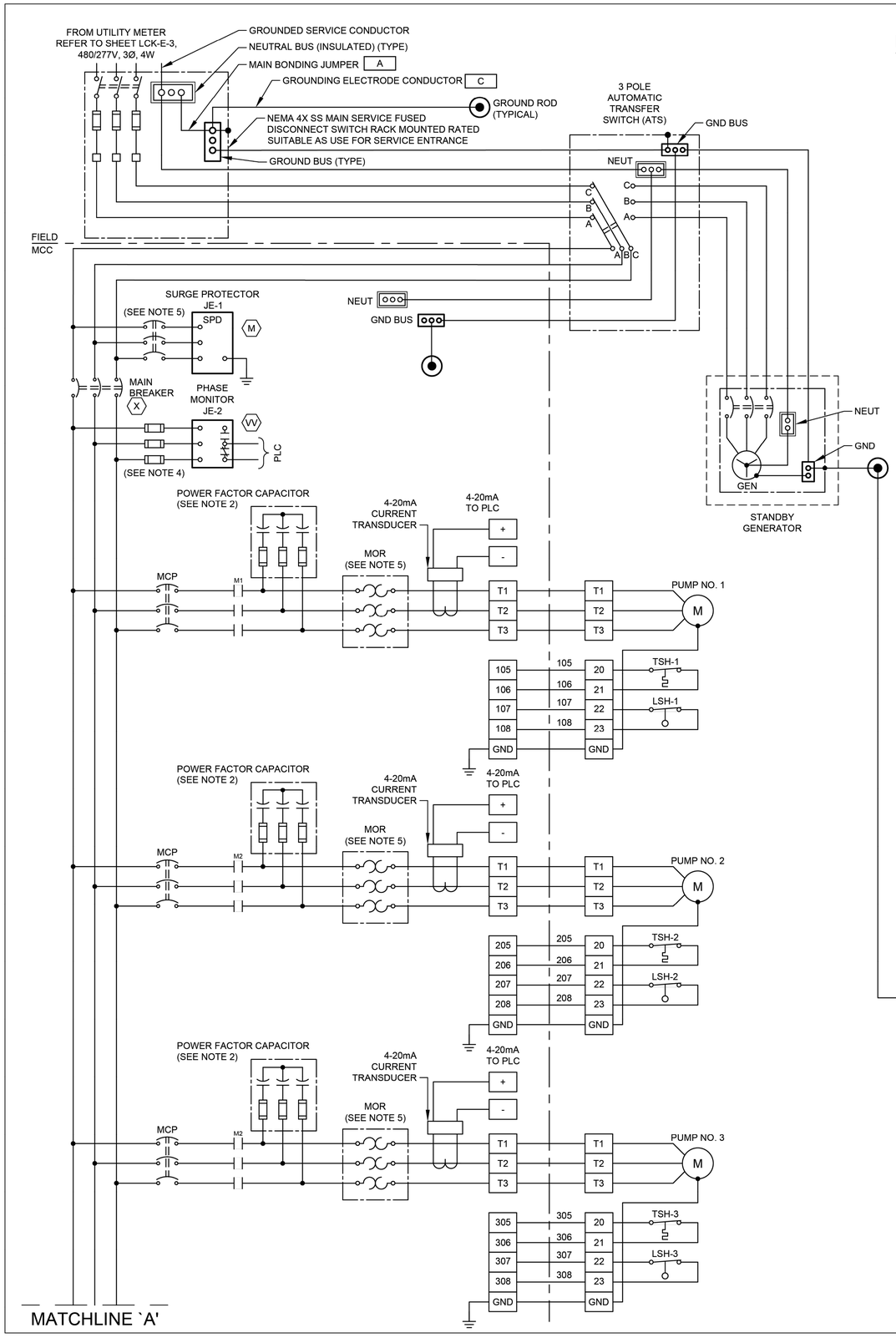

MATCHLINE `A'

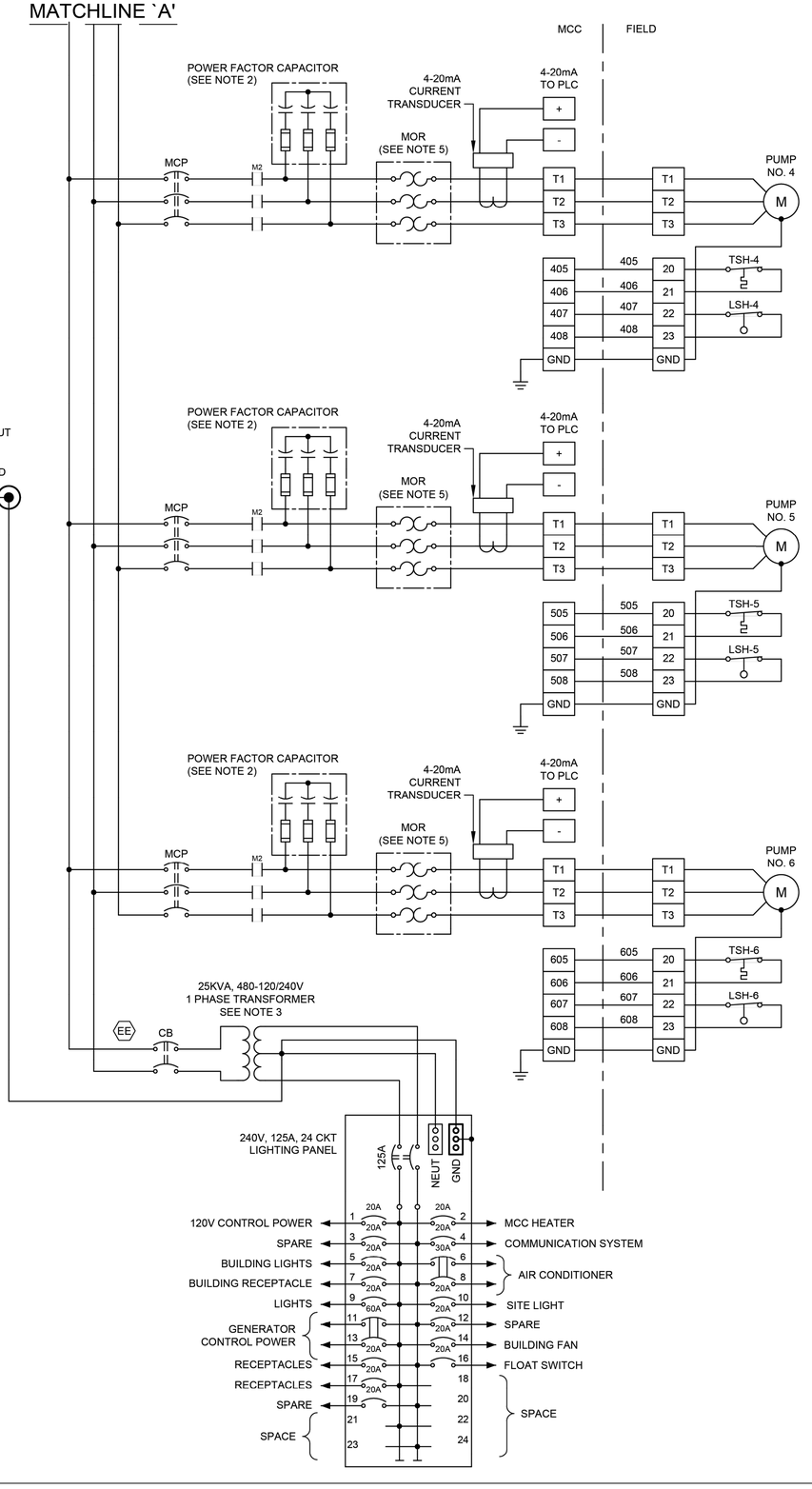

NOTES:

1. UNLESS OTHERWISE INDICATE, ALL DEVICES WITHOUT FURTHER DESIGNATION ARE LOCATED AT THE CONTROL PANEL.
2. CONTRACTOR TO COORDINATE POWER FACTOR CORRECTION CAPACITOR SIZE WITH PUMP MANUFACTURER.
3. CONTRACTOR SHALL TERMINATE POWER & CONTROL WIRES PER MANUFACTURER'S REQUIREMENTS.
4. PROVIDE FUSE SIZE ACCORDING TO MANUFACTURER'S REQUIREMENTS.
5. PROVIDE BREAKER SIZE ACCORDING TO MANUFACTURER'S REQUIREMENTS.
6. THE COMBINATION OF CT AND MOTOR OVERLOAD RELAY IF REQUIRED.

GENERAL NOTES:

1. NO ELECTRICAL MATERIAL, APPARATUS, DEVICES, APPLIANCES, FIXTURES, OR EQUIPMENT SHALL BE SOLD OR INSTALLED IN THE CITY UNLESS THEY ARE IN CONFORMANCE WITH THE PROVISIONS OF SECTION 508 CITY OF HOUSTON ELECTRICAL CODE, THE LAWS OF THE STATE OF TEXAS AND ANY APPLICABLE RULES AND REGULATIONS ISSUED UNDER THE AUTHORITY OF THE STATE STATUES. THE MAKER'S NAME, TRADEMARK, OR OTHER IDENTIFICATION SYMBOL SHALL BE PLACED ON ALL ELECTRICAL MATERIALS, APPARATUS, DEVICES, APPLIANCES, FIXTURES, AND EQUIPMENT USED OR INSTALLED UNDER THE PROVISIONS OF THIS CODE. ALL ELECTRICAL MATERIALS AND EQUIPMENT SHALL BE LISTED AND LABELED FOR THE INTENDED USE AND SHALL BE INCLUDED IN A LIST PUBLISHED BY AN APPROVAL AGENCY.

NO.	DATE	REVISION	APP.

FOR INTERIM REVIEW
ONLY NOT INTENDED FOR
PERMIT, BIDDING OR
CONSTRUCTION PURPOSES.
ENGINEER:
HOSS FOROUZAN
P.E. SERIAL NO.77748
05/18/2026

GAI
Gupta & Associates, Inc.
CONSULTING ENGINEERING
Registration No. F-2593
302 Dennis St.,
Houston, Texas 77006
Tel: 713-636-2936
Fax: 713-636-2987
email: hforouzan@gaiconsulting.com

IDS Engineering Group
13430 NW. Freeway
Suite 700
Houston, Tx. 77040
713.462.3178
TxEng Firm 2726
TxSurv Firm 10110700

CITY OF HOUSTON
HOUSTON PUBLIC WORKS

LIFT STATION RENEWAL AND REPLACEMENT FY 2023

LOCKWOOD LIFT STATION THREE-LINE DIAGRAM

WBS NUMBER	FOR CITY OF HOUSTON USE ONLY
R-000267-0179-4	
DRAWING SCALE	
HORIZ: NONE VERT: NONE	
CITY OF HOUSTON PM	
NAWARAJ PANTA, P.E.	
DWG. NO. LCK-E-04	SHEET NO. 51 OF 361

IDS JOB No. 0057-085-00

FILE PATH: O:\H8108_Lift Station Rehabilitation And Reconstruction (IDS)\6 Drawings\Electrical\Working\Lockwood\H8108_LCK-E-04.dwg

PLOTTED: 5/12/2026 8:25 PM

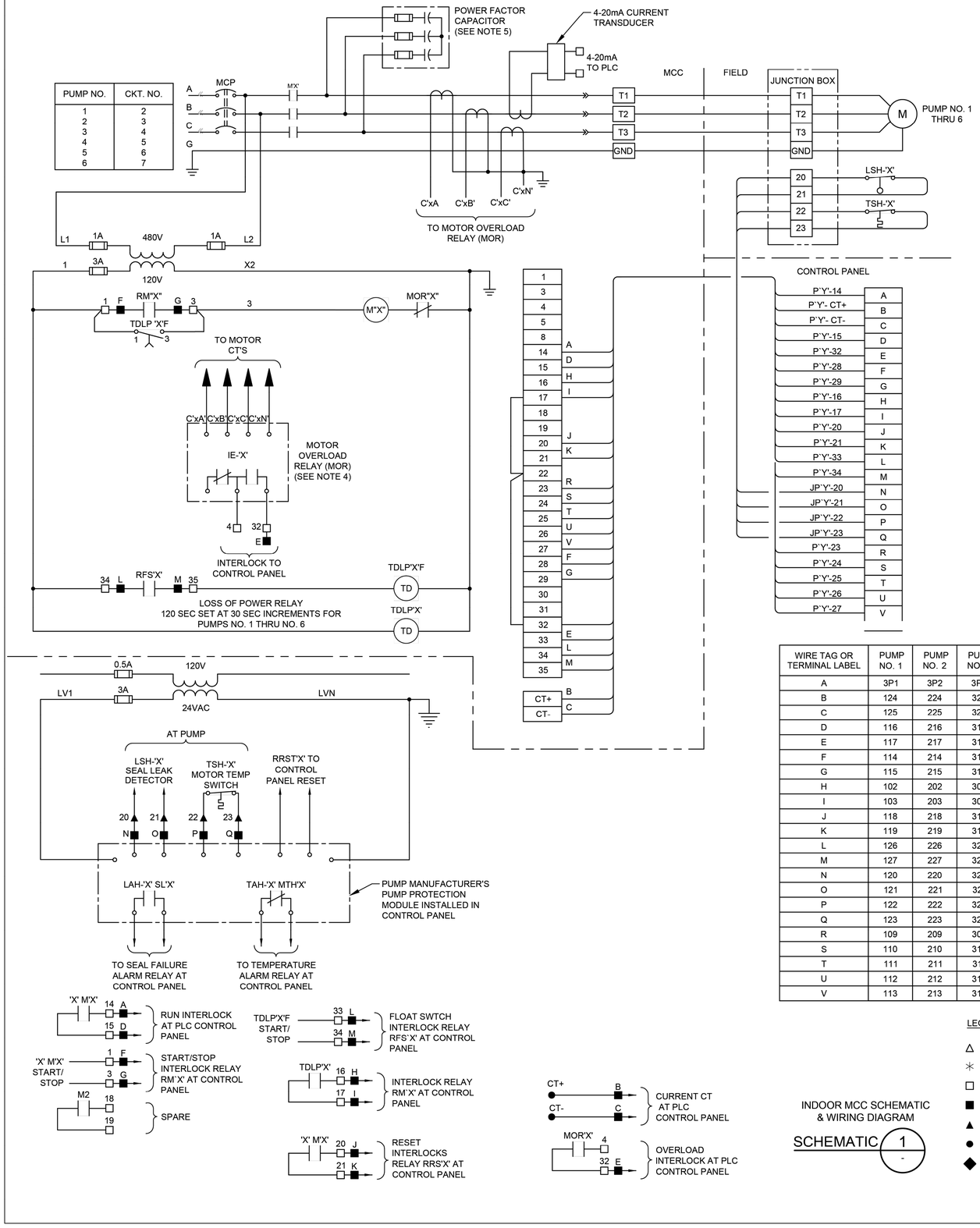

WIRE TAG OR TERMINAL LABEL	PUMP NO. 1	PUMP NO. 2	PUMP NO. 3	PUMP NO. 4	PUMP NO. 5	PUMP NO. 6	FUNCTION
A	3P1	3P2	3P3	3P4	3P5	3P6	24VDC CONTROL
B	124	224	324	424	524	624	4-20mA CURRENT TRANSDUCER
C	125	225	325	425	525	625	4-20mA CURRENT TRANSDUCER
D	116	216	316	416	516	616	M CONTACT
E	117	217	317	417	517	617	OVERLOAD ALARM
F	114	214	314	414	514	614	RUN INTERLOCK
G	115	215	315	415	515	615	RUN INTERLOCK
H	102	202	302	402	502	602	LOSS OF POWER TIMER
I	103	203	303	403	503	603	LOSS OF POWER TIMER
J	118	218	318	418	518	618	ALARM RESET INTERLOCK
K	119	219	319	419	519	619	ALARM RESET INTERLOCK
L	126	226	326	426	526	626	FLOAT SWITCH RUN INTERLOCK
M	127	227	327	427	527	627	FLOAT SWITCH RUN INTERLOCK
N	120	220	320	420	520	620	SEAL LEAK DETECTOR
O	121	221	321	421	521	621	SEAL LEAK DETECTOR
P	122	222	322	422	522	622	MOTOR TEMPERATURE SWITCH
Q	123	223	323	423	523	623	MOTOR TEMPERATURE SWITCH
R	109	209	309	409	509	609	VFD MODE
S	110	210	310	410	510	610	4-20mA VFD SPEED CONTROL
T	111	211	311	411	511	611	4-20mA VFD SPEED CONTROL
U	112	212	312	412	512	612	4-20mA VFD SPEED INDICATION
V	113	213	313	413	513	613	4-20mA VFD SPEED INDICATION

INDOOR MCC SCHEMATIC & WIRING DIAGRAM

SCHEMATIC 1 - 1

LEGEND

- △ DEVICE OR FIELD TERMINAL LOCATED AT MOTOR
- ✳ DEVICE OR FIELD TERMINAL LOCATED REMOTE
- □ DEVICE OR FIELD TERMINAL LOCATED AT POWER PANEL
- ■ FIELD TERMINAL LOCATED AT CONTROL PANEL
- ▲ REMOTE TERMINAL
- ● DEVICE TERMINAL NO.
- ◆ PC INTERFACE TERMINAL

NOTES:

1. THE 'X' NOTATION IN SCHEMATIC DESIGNATIONS REPRESENTS APPLICABLE PUMP NO. 1, 2, 3, 4, 5, 6.
2. THE 'Y' NOTATION INDICATES MCC CIRCUIT NUMBER.
3. UNLESS OTHERWISE INDICATED, ALL DEVICES WITHOUT FURTHER DESIGNATION ARE LOCATED AT THE MOTOR CONTROL CENTER (MCC).
4. MOTOR OVERLOAD RELAY OUTPUT CONTACT SHOWN IS NORMALLY CLOSED WHEN RELAY IS DE-ENERGIZED. OPEN WHEN ENERGIZED, AND CLOSED WHEN IN ALARM. (VERIFY OPERATION OF RELAY PROVIDED AND ADJUST CONNECTION OF RMOR AUXILIARY RELAYS.)
5. CONTRACTOR TO COORDINATE POWER FACTOR CORRECTION CAPACITOR SIZE WITH PUMP MANUFACTURER.

GENERAL NOTES:

1. NO ELECTRICAL MATERIAL, APPARATUS, DEVICES, APPLIANCES, FIXTURES, OR EQUIPMENT SHALL BE SOLD OR INSTALLED IN THE CITY UNLESS THEY ARE IN CONFORMANCE WITH THE PROVISIONS OF SECTION 508 CITY OF HOUSTON ELECTRICAL CODE, THE LAWS OF THE STATE OF TEXAS AND ANY APPLICABLE RULES AND REGULATIONS ISSUED UNDER THE AUTHORITY OF THE STATE STATUES. THE MAKER'S NAME, TRADEMARK, OR OTHER IDENTIFICATION SYMBOL SHALL BE PLACED ON ALL ELECTRICAL MATERIALS, APPARATUS, DEVICES, APPLIANCES, FIXTURES, AND EQUIPMENT USED OR INSTALLED UNDER THE PROVISIONS OF THIS CODE. ALL ELECTRICAL MATERIALS AND EQUIPMENT SHALL BE LISTED AND LABELED FOR THE INTENDED USE AND SHALL BE INCLUDED IN A LIST PUBLISHED BY AN APPROVAL AGENCY.

NO.	DATE	REVISION	APP.

FOR INTERIM REVIEW
ONLY NOT INTENDED FOR
PERMIT, BIDDING OR
CONSTRUCTION PURPOSES.
ENGINEER:
HOSS FOROUZAN
P.E. SERIAL NO.77748
05/18/2026

GAI
Gupta & Associates, Inc.
CONSULTING ENGINEERING
Registration No. F-2593
302 Dennis St.,
Houston, Texas 77006
Tel: 713-636-2936
Fax: 713-636-2987
email: hforouzan@gaiconsulting.com

IDS Engineering Group
13430 NW. Freeway
Suite 700
Houston, Tx. 77040
713.462.3178
TxEng Firm 2726
TxSurv Firm 10110700

CITY OF HOUSTON
HOUSTON PUBLIC WORKS

LIFT STATION RENEWAL AND REPLACEMENT FY 2023

LOCKWOOD LIFT STATION MCC SCHEMATIC & WIRING DIAGRAM

WBS NUMBER	FOR CITY OF HOUSTON USE ONLY
R-000267-0179-4	
DRAWING SCALE	
HORIZ: NONE VERT: NONE	
CITY OF HOUSTON PM	
NAWARAJ PANTA, P.E.	
SHEET NO. 52 OF 361	

DWG. NO. LCK-E-05

IDS JOB No. 0057-085-00

FILE PATH: O:\H8108_Lift Station Rehabilitation And Reconstruction (IDS)\6 Drawings\Electrical\Working\Lockwood\H8108_LCK-E-05.dwg

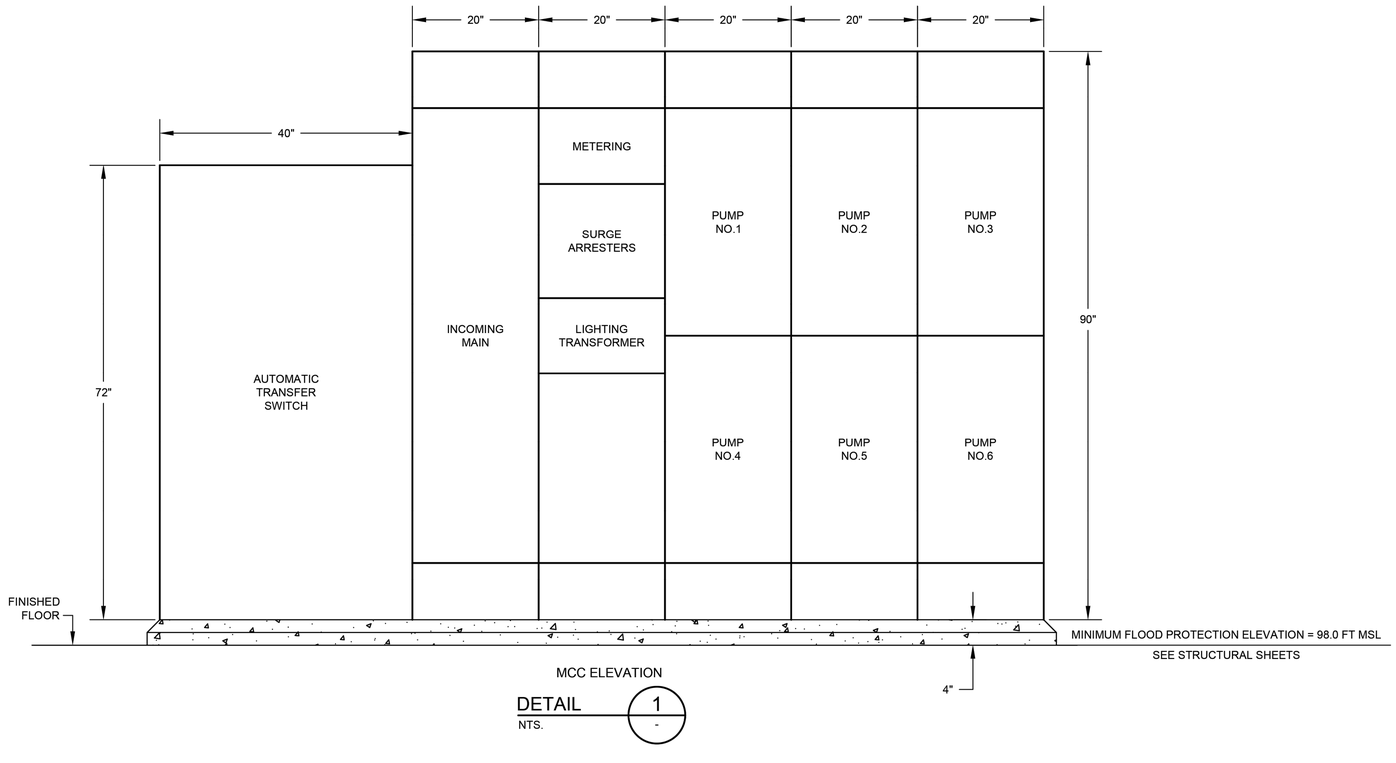

MCC ELEVATION

DETAIL 1 / -

NTS.

NO.	DATE	REVISION	APP.

FOR INTERIM REVIEW
ONLY NOT INTENDED FOR
PERMIT, BIDDING OR
CONSTRUCTION PURPOSES.
ENGINEER:
HOSS FOROUZAN
P.E. SERIAL NO.77748
05/18/2026

GAI
Gupta & Associates, Inc.
CONSULTING ENGINEERING
Registration No. F-2593
302 Dennis St.,
Houston, Texas 77006
Tel: 713-636-2936
Fax: 713-636-2987
email: hforouzan@gaiconsulting.com

IDS Engineering Group
13430 NW. Freeway
Suite 700
Houston, Tx. 77040
713.462.3178
TxEng Firm 2726
TxSurv Firm 10110700

CITY OF HOUSTON
HOUSTON PUBLIC WORKS

LIFT STATION RENEWAL
AND REPLACEMENT FY 2023

LOCKWOOD LIFT STATION
MCC ELEVATION

WBS NUMBER	FOR CITY OF HOUSTON USE ONLY
R-000267-0179-4	
DRAWING SCALE	
HORIZ: NTS VERT: NTS	
CITY OF HOUSTON PM	
NAWARAJ PANTA, P.E.	
SHEET NO. 53 OF 361	

DWG. NO.
LCK-E-06

IDS JOB No. 0057-085-00

PLOTTED: 5/12/2026 8:25 PM

FILE PATH: O:\H8108_Lift Station Rehabilitation And Reconstruction (IDS)\6 Drawings\Electrical\Working\Lockwood\H8108_LCK-E-06.dwg

PLOTTED: 5/12/2026 8:25 PM

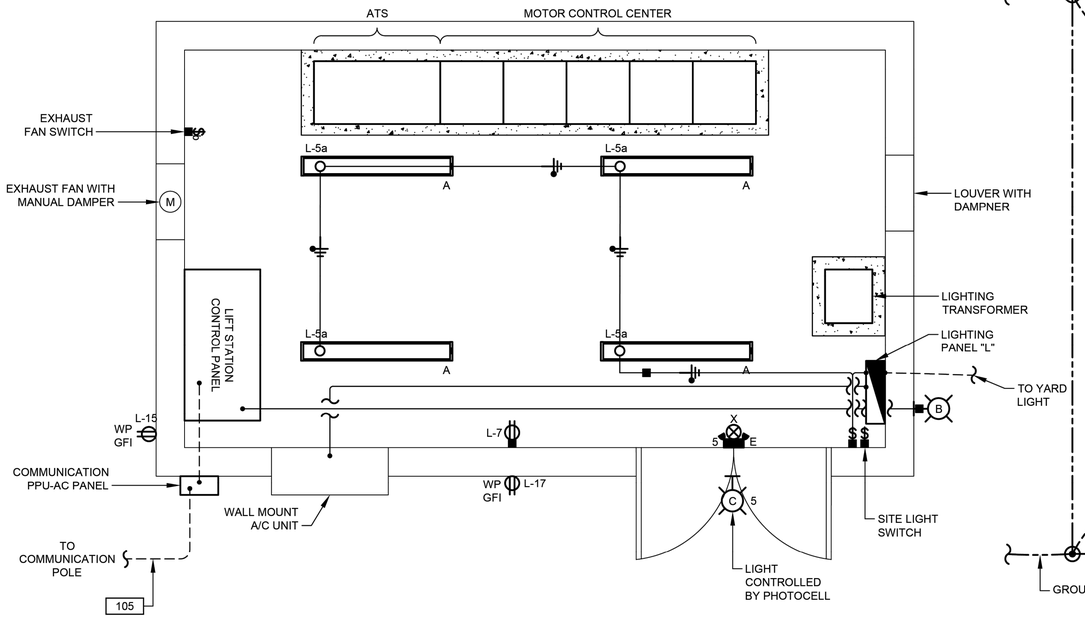

LIGHTING & COMMUNICATION SYSTEM PLAN

1/2"=1'-0"

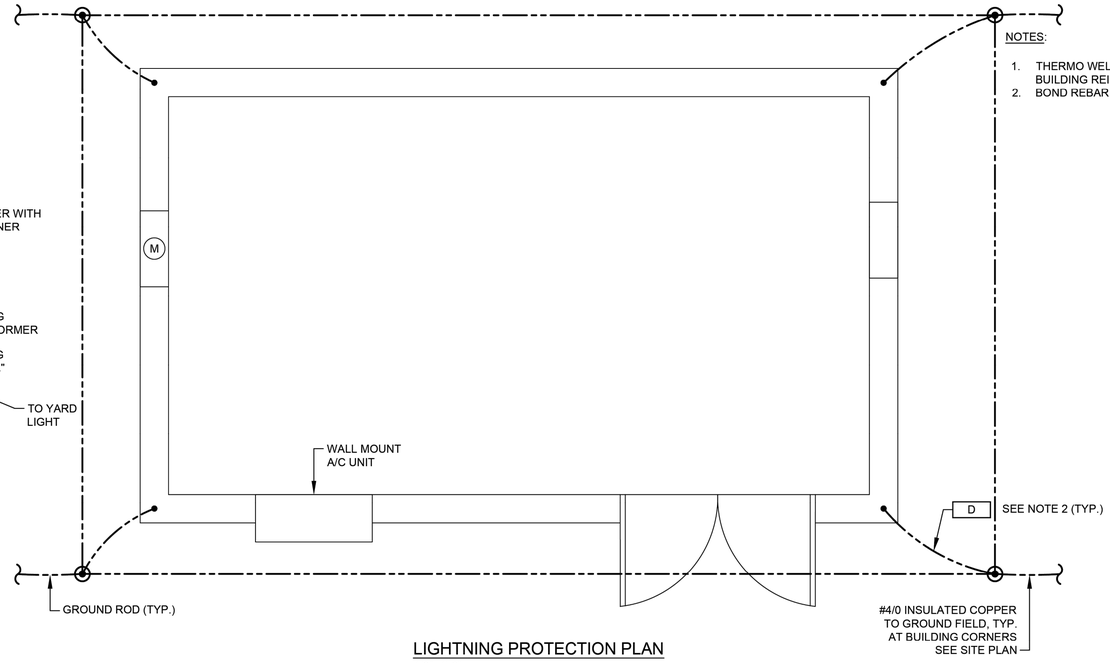

LIGHTNING PROTECTION PLAN

1/2"=1'-0"

NO.	DATE	REVISION	APP.

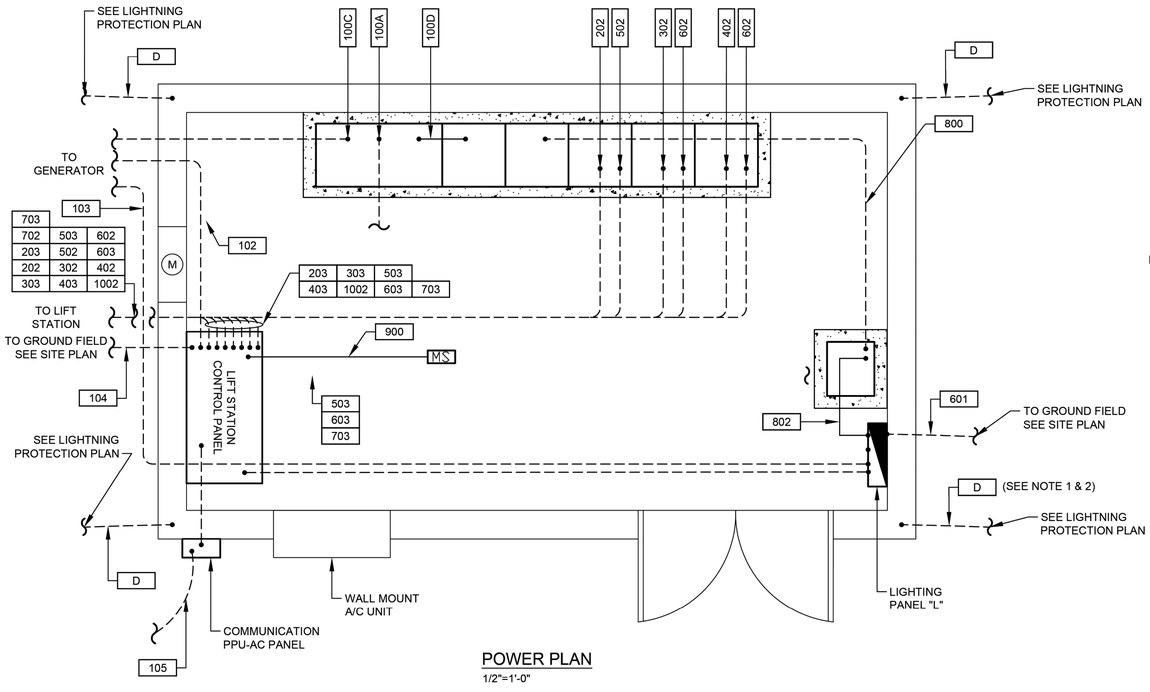

POWER PLAN

1/2"=1'-0"

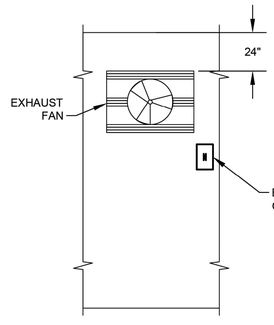

EXHAUST FAN

NTS.

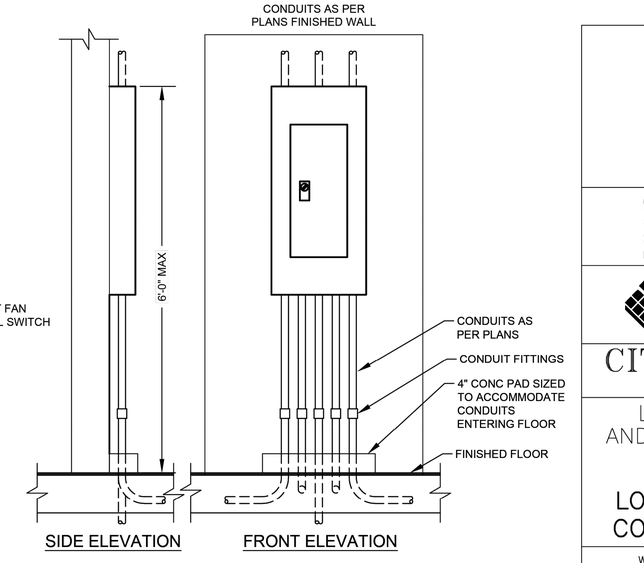

TYPICAL PANEL INSTALLATION

DETAIL - / - NTS.

FOR INTERIM REVIEW ONLY NOT INTENDED FOR PERMIT, BIDDING OR CONSTRUCTION PURPOSES.
ENGINEER:
HOSS FOROUZAN
P.E. SERIAL NO.77748
05/18/2026

GAI
Gupta & Associates, Inc.
CONSULTING ENGINEERING
Registration No. F-2593
302 Dennis St.,
Houston, Texas 77006
Tel: 713-636-2936
Fax: 713-636-2987
email: hforouzan@gaiconsulting.com

IDS Engineering Group
13430 NW. Freeway
Suite 700
Houston, Tx. 77040
713.462.3178
TxEng Firm 2726
TxSurv Firm 10110700

CITY OF HOUSTON

HOUSTON PUBLIC WORKS

LIFT STATION RENEWAL AND REPLACEMENT FY 2023

LOCKWOOD LIFT STATION CONTROL BUILDING PLAN

WBS NUMBER	FOR CITY OF HOUSTON USE ONLY
R-000267-0179-4	
DRAWING SCALE	
HORIZ: AS NOTED VERT: AS NOTED	
CITY OF HOUSTON PM	
NAWARAJ PANTA, P.E.	
SHEET NO. 54 OF 361	

DWG. NO. LCK-E-07

FILE PATH: O:\H8108_Lift Station Rehabilitation And Reconstruction (IDS)\6 Drawings\Electrical\Working\Lockwood\H8108_LCK-E-07.dwg

IDS JOB No. 0057-085-00

PLOTTED: 5/12/2026 8:25 PM

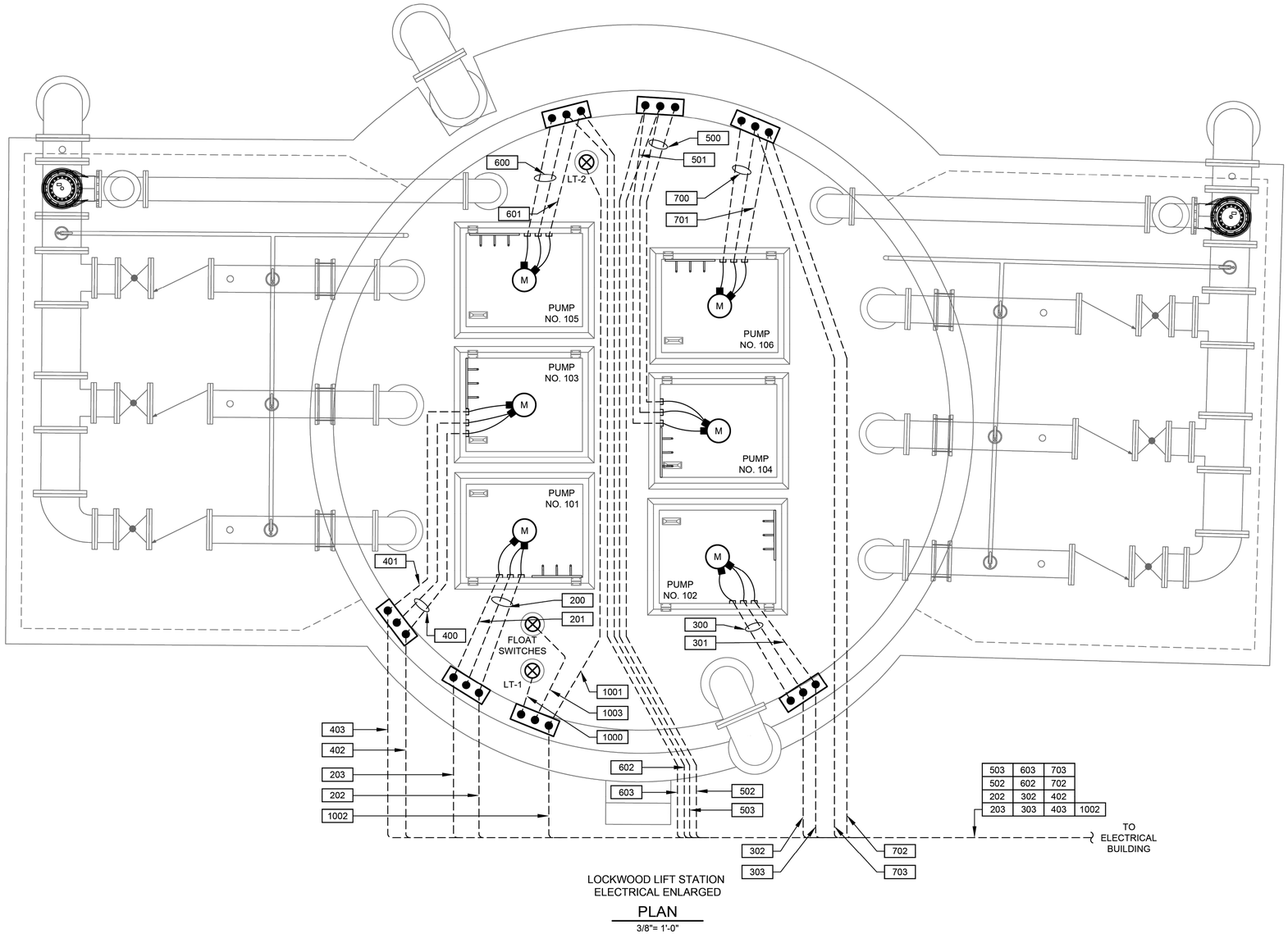

LOCKWOOD LIFT STATION
ELECTRICAL ENLARGED

PLAN

3/8"= 1'-0"

1 0 2 4

SCALE: 3/8" = 1'-0"

NO.	DATE	REVISION	APP.

FOR INTERIM REVIEW
ONLY NOT INTENDED FOR
PERMIT, BIDDING OR
CONSTRUCTION PURPOSES.
ENGINEER:
HOSS FOROUZAN
P.E. SERIAL NO.77748
05/18/2026

GAI
Gupta & Associates, Inc.
CONSULTING ENGINEERING
Registration No. F-2593
302 Dennis St.,
Houston, Texas 77006
Tel: 713-636-2936
Fax: 713-636-2987
email: hforouzan@gaiconsulting.com

IDS Engineering Group
13430 NW. Freeway
Suite 700
Houston, Tx. 77040
713.462.3178
TxEng Firm 2726
TxSurv Firm 10110700

CITY OF HOUSTON
HOUSTON PUBLIC WORKS

LIFT STATION RENEWAL AND REPLACEMENT FY 2023

LOCKWOOD LIFT STATION ELECTRICAL ENLARGED PLAN

WBS NUMBER	FOR CITY OF HOUSTON USE ONLY
R-000267-0179-4	
DRAWING SCALE	
HORIZ 3/8"=1'-0"	
CITY OF HOUSTON PM	
NAWARAJ PANTA, P.E.	
DWG. NO. LCK-E-08	SHEET NO. 55 OF 361

IDS JOB No. 0057-085-00

FILE PATH: O:\H8108_Lift Station Rehabilitation And Reconstruction (IDS)\6 Drawings\Electrical\Working\Lockwood\H8108_LCK-E-08.dwg

PLOTTED: 5/12/2026 8:25 PM

GENERAL NOTES:

1. ALL NATURAL GAS PIPING FROM CNP GAS TO NATURAL GAS GENERATOR IS TO BE INSTALLED BY A PROFESSIONAL PLUMBER LICENSED IN THE STATE OF TEXAS.

NOTES BY SYMBOL "⟨#⟩":

⟨1⟩ REFER TO STRUCTURAL DRAWINGS FOR PLATFORM DETAILS.

⟨2⟩ CONDUIT TO BE INSTALLED BELOW PLATFORM.

⟨3⟩ GENERATOR TO BE USED FOR EMERGENCY USE ONLY.

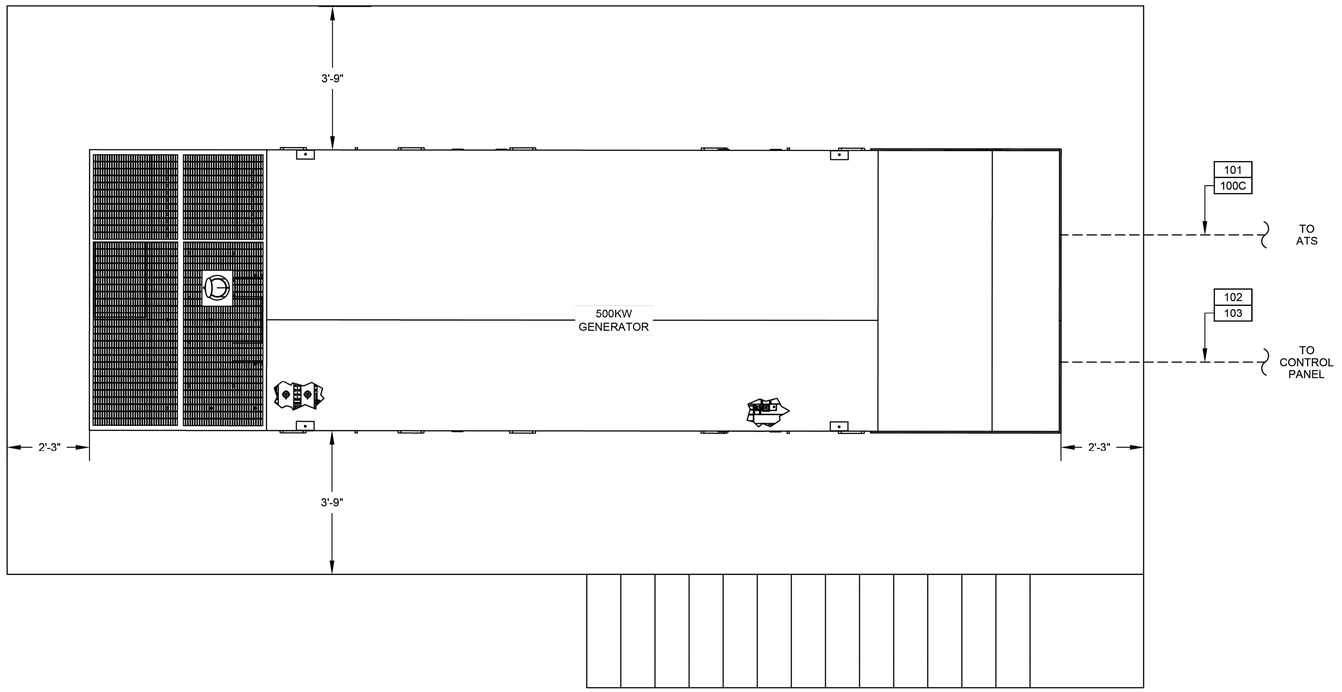

PROPOSED ELECTRICAL
PLATFORM LAYOUT

DETAIL 1 (⟨1⟩⟨2⟩⟨3⟩)
1/2"=1'-0"

NO.	DATE	REVISION	APP.

FOR INTERIM REVIEW
ONLY NOT INTENDED FOR
PERMIT, BIDDING OR
CONSTRUCTION PURPOSES.
ENGINEER:
HOSS FOROUZAN
P.E. SERIAL NO.77748
05/18/2026

GAI
Gupta & Associates, Inc.
CONSULTING ENGINEERING
Registration No. F-2593
302 Dennis St.,
Houston, Texas 77006
Tel: 713-636-2936
Fax: 713-636-2987
email: hforouzan@gaiconsulting.com

IDS Engineering Group
13430 NW. Freeway
Suite 700
Houston, Tx. 77040
713.462.3178
TxEng Firm 2726
TxSurv Firm 10110700

CITY OF HOUSTON
HOUSTON PUBLIC WORKS

LIFT STATION RENEWAL AND REPLACEMENT FY 2023

LOCKWOOD LIFT STATION ELECTRICAL PROPOSED PLATFORM LAYOUT

WBS NUMBER	FOR CITY OF HOUSTON USE ONLY
R-000267-0179-4	
DRAWING SCALE	
HORIZ: 1/2"=1'-0" VERT: 1/2"=1'-0"	
CITY OF HOUSTON PM	
NAWARAJ PANTA, P.E.	
SHEET NO. 56 OF 361	

DWG. NO. LCK-E-09

IDS JOB No. 0057-085-00

FILE PATH: O:\H8108_Lift Station Rehabilitation And Reconstruction (IDS)\6 Drawings\Electrical\Working\Lockwood\H8108_LCK-E-09.dwg

PLOTTED: 5/12/2026 8:25 PM

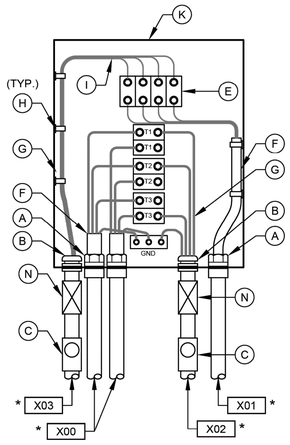

PUMP NO.1 - NO.6
JUNCTION BOX

DETAIL 3
NTS
(SEE NOTE 7)

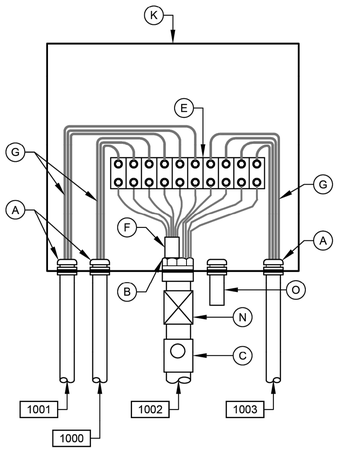

LEVEL TRANSMITTER
JUNCTION BOX

DETAIL 4
NTS
(SEE NOTE 7)

✱ REPLACE `X' PER NOTATION SCHEDULE

NOTATION SCHEDULE

`X'	PUMP NO.
2	1
3	2
4	3
5	4
6	5
7	6

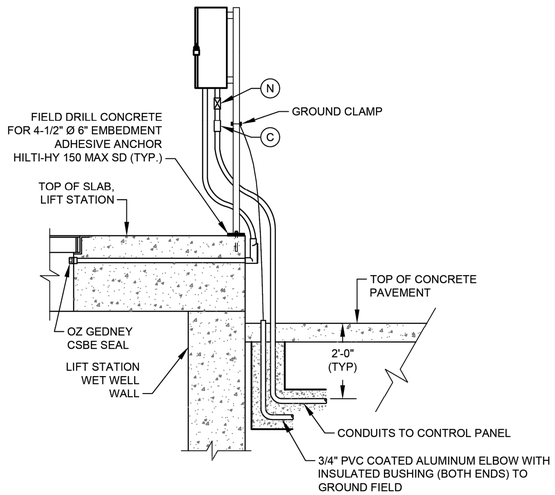

TYP SIDE VIEW FOR DETAIL 1 & 2
(SEE NOTE 10)

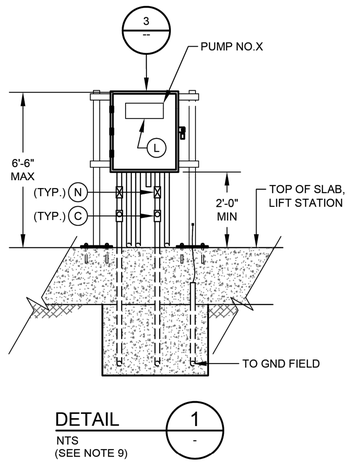

DETAIL 1
NTS
(SEE NOTE 9)

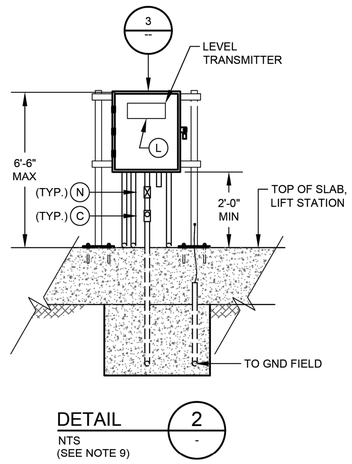

DETAIL 2
NTS
(SEE NOTE 9)

JUNCTION BOX EQUIPMENT SCHEDULE

- A - OZ GEDNEY CSBE SEAL
- B - WATERTIGHT CONDUIT HUB WITH INSULATED BUSHING
- C - CLASS I, DIV 1, EXPLOSION PROOF SEAL INSTALLED PER NEC DIV 501
- D - POWER TERMINAL BLOCK W/SCREW DOWN BOX LUGS
- E - CONTROL TERM BLOCK W/SCREW DOWN BOX LUGS
- F - MULTI-CONDUCTOR CABLE, REMOVE OUTER JACKET AS SHOWN
- G - WIRING AS SCHEDULED
- H - WIRING HARNESS PERMANENTLY AFFIXED
- I - PUMP CONTROL WIRING FROM PUMPS 2; 2 & 3; 4; OR D2, AS APPLICABLE
- J - 1 1/2" PVC COATED CONDUIT NIPPLE
- K - NEMA 6P STAINLESS STEEL JUNCTION BOX WITH GASKETED FRONT COVER, SINGLE QUARTER TURN, OIL-TIGHT LATCH AND PADLOCKING PROVISIONS, HOFFMAN D-3L16H1206 SS LF OR EQUAL. MINIMUM SIZE: 12"W X 16"H X 6"D
- L - NAMEPLATE, SEE SPECIFICATIONES (SEE NAMEPLATE SCHEDULE)
- M - MOTOR RATED SWITCH
- N - EXPANSION FITTING
- O - DRAIN VENT

NOTES:

1. NAMEPLATES SHALL BE MOUNTED TO JUNCTION BOXES USING 316 STAINLESS STEEL HARDWARE.
2. MAINTAIN MINIMUM SEPARATION REQUIRED UNDER NEC ARTICLE 504, BETWEEN INTRINSICALLY SAFE CONTROL WIRING AND NON INTRINSICALLY SAFE MOTOR FEEDER WIRING.
3. UNLESS OTHERWISE NOTED, ALL EXTERIOR EXPOSED CONDUITS SHALL BE PVC COATED ALUMINUM.
4. UNLESS OTHERWISE NOTED, ALL NUTS, BOLTS, SCREWS WASHERS, ETC SHALL BE TYPE 316 STAINLESS STEEL.
5. ALL UNDERGROUND CONDUITS TO BE ENCASED IN REINFORCED CONCRETE DUCTBANK.
6. PROVIDE ANTI-CORROSIVE SPRAY ON ANY BARE METAL PARTS OR EXPOSED WIRE.
7. SEE WIRING SCHEMATICS FOR TERMINALS AND WIRE NUMBERS.
8. ANY CONDUIT REQUIRING A CSBE SEAL, SHALL BE A MINIMUM SIZE OF 2 1/2" PER CABLE.
9. DETAIL SHOWN MAY BE MODIFIED PER SITE SITUATION.
10. COORDINATE WITH WASTE WATER OPERATIONS ELECTRICAL ORGANIZATION FOR THE OPENING OF JUNCTION BOXES TO THE SIDE OF WET WELL IF REQUIRED DURING CONSTRUCTION.
11. THE ENCLOSURES WITH ELECTRICAL CIRCUITS SHALL BE A MINIMUM OF 5 FEET FROM ANY CLASSIFIED AREA, OTHERWISE EXPLOSION PROOF TYPE ENCLOSURES SHALL BE USED.

NO.	DATE	REVISION	APP.

FOR INTERIM REVIEW
ONLY NOT INTENDED FOR
PERMIT, BIDDING OR
CONSTRUCTION PURPOSES.
ENGINEER:
HOSS FOROUZAN
P.E. SERIAL NO.77748
05/18/2026

GAI
Gupta & Associates, Inc.
CONSULTING ENGINEERING
Registration No. F-2593
302 Dennis St.,
Houston, Texas 77006
Tel: 713-636-2936
Fax: 713-636-2987
email: hforouzan@gaiconsulting.com

IDS Engineering Group
13430 NW. Freeway
Suite 700
Houston, Tx. 77040
713.462.3178
TxEng Firm 2726
TxSurv Firm 10110700

CITY OF HOUSTON
HOUSTON PUBLIC WORKS

LIFT STATION RENEWAL
AND REPLACEMENT FY 2023

LOCKWOOD LIFT STATION JUNCTION BOX DETAILS

WBS NUMBER	FOR CITY OF HOUSTON USE ONLY
R-000267-0179-4	
DRAWING SCALE	
HORIZ: NTS VERT: NTS	
CITY OF HOUSTON PM	
NAWARAJ PANTA, P.E.	
SHEET NO. 57 OF 361	

DWG. NO. LCK-E-10

IDS JOB No. 0057-085-00

FILE PATH: O:\H8108_Lift Station Rehabilitation And Reconstruction (IDS)\6 Drawings\Electrical\Working\Lockwood\H8108_LCK-E-10.dwg

PLOTTED: 5/12/2026 8:25 PM

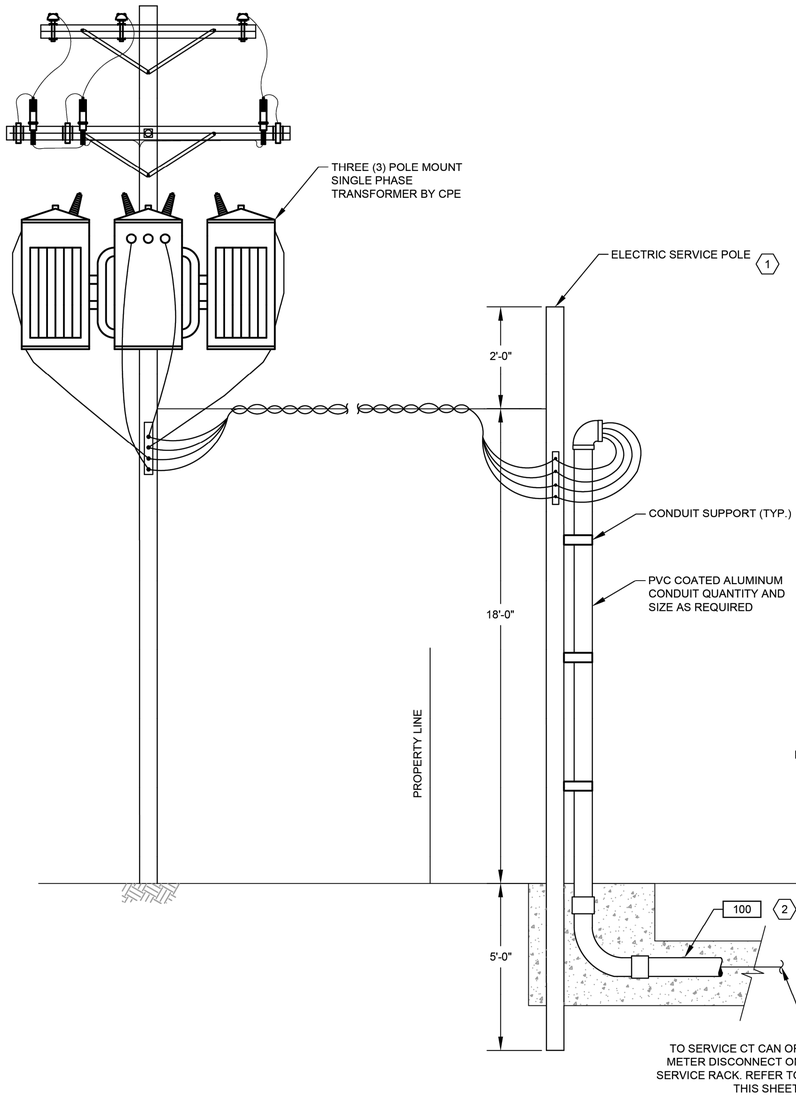

ELECTRICAL SERVICE ENTANCE

DETAIL 1 / NTS. -

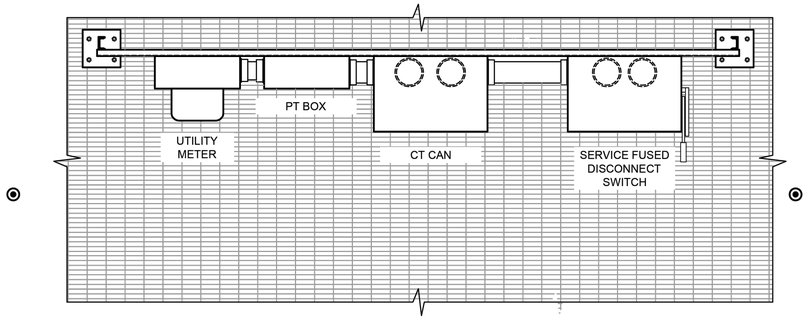

PLAN

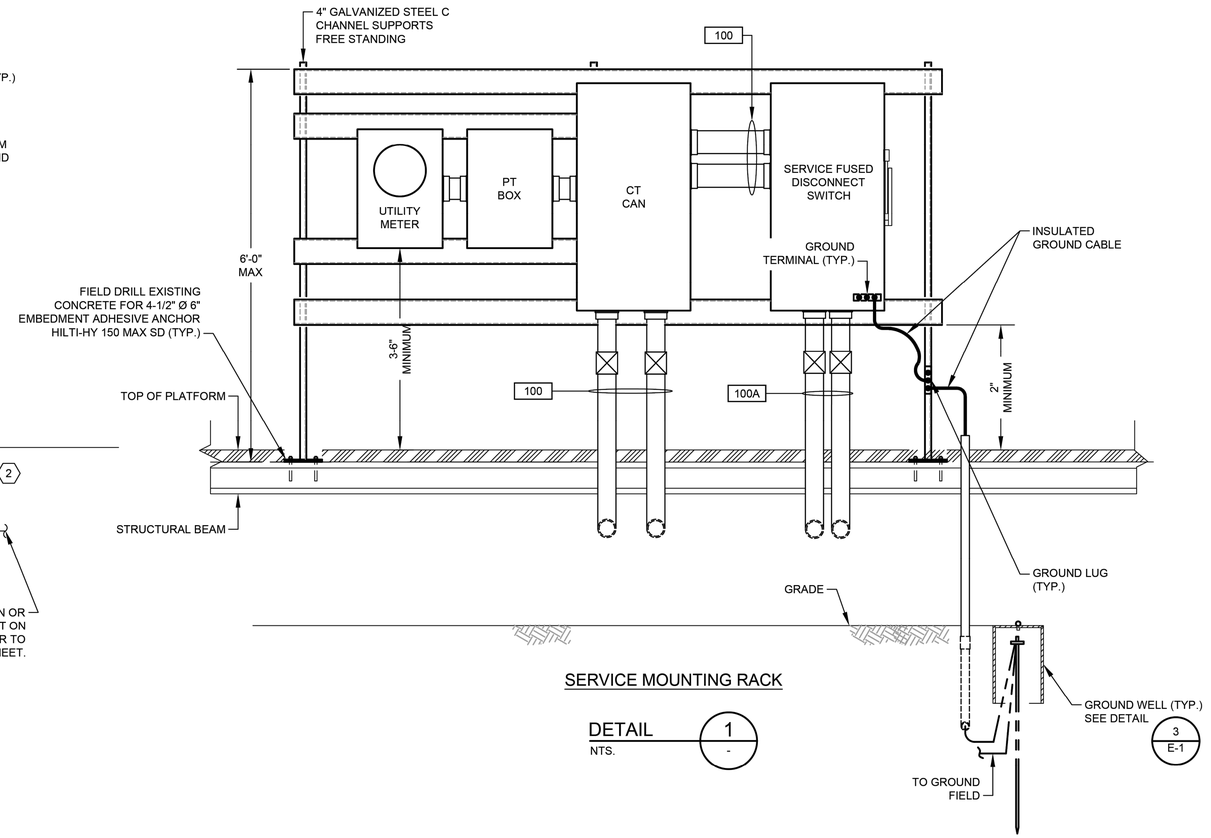

SERVICE MOUNTING RACK

DETAIL 1 / NTS. -

NOTES BY SYMBOL "#":

1. WOODEN POLE 20' LONG. TOP DIAMETER 6" BOTTOM DIAMETER 8" PROVIDED AND INSTALLED BY ELECTRICAL CONTRACTOR.
2. ELECTRICAL SERVICE FEEDER PROVIDED AND INSTALLED BY ELECTRICAL CONTRACTOR. COORDINATE WITH CPE FOR THE REQUIREMENTS OF THE INSTALLATION.

NO.	DATE	REVISION	APP.

FOR INTERIM REVIEW
ONLY NOT INTENDED FOR
PERMIT, BIDDING OR
CONSTRUCTION PURPOSES.
ENGINEER:
HOSS FOROUZAN
P.E. SERIAL NO.77748
05/18/2026

GAI
Gupta & Associates, Inc.
CONSULTING ENGINEERING
Registration No. F-2593
302 Dennis St.,
Houston, Texas 77006
Tel: 713-636-2936
Fax: 713-636-2987
email: hforouzan@gaiconsulting.com

IDS Engineering Group
13430 NW. Freeway
Suite 700
Houston, Tx. 77040
713.462.3178
TxEng Firm 2726
TxSurv Firm 10110700

CITY OF HOUSTON
HOUSTON PUBLIC WORKS

LIFT STATION RENEWAL AND REPLACEMENT FY 2023

LOCKWOOD LIFT STATION SERVICE POLE & RACK DETAIL

WBS NUMBER	FOR CITY OF HOUSTON USE ONLY
R-000267-0179-4	
DRAWING SCALE	
HORIZ: NTS VERT: NTS	
CITY OF HOUSTON PM	
NAWARAJ PANTA, P.E.	
SHEET NO. 58 OF 361	

DWG. NO. LCK-E-11

IDS JOB No. 0057-085-00

FILE PATH: O:\H8108_Lift Station Rehabilitation And Reconstruction (IDS)\6 Drawings\Electrical\Working\Lockwood\H8108_LCK-E-11.dwg

	DESCRIPTION	SERVICE		ROUTING			CONDUIT & WIRE SIZE
		VOLTAGE	AMPS OR HP	FROM	TO	VIA	
A	MAIN BONDING JUMPER	--	--	MAIN FUSED DISCONNECT NEUTRAL	MAIN FUSED DISCONNECT GROUND	--	#2/0 CU GND.
B	EQUIPMENT BONDING JUMPER	--	--	MCC/POWER PANEL ENCLOSURE	POWER/CONTROL PANEL & EQUIPMENT	--	#2/0 CU GND.
C	GROUNDED ELECTRODE CONDUCTOR	--	--	GROUNDING ELECTRODE	MAIN SERVICE FUSED DISCONNECT GROUNDING	--	#2/0 CU GND.
D	BUILDING GROUNDING CONDUCTOR	--	--	BUILDING FOOT REBAR	GROUNDING FIELD	--	#4/0 CU GND.
100	SERVICE ENTRANCE	480V	800A	UTILITY POWER SERVICE	METER DISCONNECT	--	2 SETS OF 4 #500MCM, #1/0 CU GND., 3-1/2"C. EA.
100A	SERVICE POWER	480V	800A	SERVICE DISCONNECT	ATS	--	2 SETS OF 4 #500MCM, #1/0 CU GND., 3-1/2"C. EA.
100B	NORMAL/EMERGENCY POWER	24VDC	--	ATS	CONTROL PANEL	--	4#14 AWG., 1"C.
100C	EMERGENCY POWER	480V	800A	ATS	GENERATOR	--	2 SETS OF 4 #500MCM, #1/0 CU GND., 3-1/2"C. EA.
100D	ELECTRIC POWER	480V	800A	ATS	MOTOR CONTROL CENTER	--	2 SETS OF 4 #500MCM, #1/0 CU GND., 3-1/2"C. EA.
101	GENERATOR CONTROL	120V	--	ATS	GENERATOR	--	6#14., #12 GND., 1" C.
102	ANNUNCIATION	--	--	GENERATOR	CONTROL PANEL	--	12#14 AWG., #14 GND.
103	GENERATOR AUX. POWER	240/120V	60A	GENERATOR	LIGHTING PANEL	--	3#4 AWG., #6 GND., 1-1/2"C.
105	COMMUNICATION	--	--	COMMUNICATION POLE	CONTROL PANEL	--	1-1/2"C. CAT-5E
200	PUMP NO. 101 POWER	480V	85 HP	PUMP NO.101	PUMP NO.101 JUNCTION BOX	--	MANUFACTURER CABLE IN 3"C.
201	PUMP NO. 101 CONTROLS	120V	--	PUMP NO.101	PUMP NO.101 JUNCTION BOX	--	MANUFACTURER CABLE IN 2-1/2"C.
202	PUMP NO. 101 POWER	480V	85 HP	PUMP NO.101 JUNCTION BOX	PUMP STARTER	--	3#2/0 AWG., #6 GND., 2"C.
203	PUMP NO. 101 CONTROLS	120V	--	PUMP NO.101 JUNCTION BOX	PUMP STARTER	--	5#14 AWG, 1"C.
205	PUMP NO. 101 CONTROLS	120V	--	STARTER IN MOTOR CONTROL CENTER	CONTROL PANEL	--	12#14 1"C.
206	PUMP NO. 101 CAPACITOR	480V	TBD	PUMP NO. 101 MOTOR STARTER	POWER FACTOR CORRECTION CAPACITOR	--	3#6, #8 GND., 1" C.
300	PUMP NO. 102 POWER	480V	85 HP	PUMP NO. 102	PUMP NO. 102 JUNCTION BOX	--	MANUFACTURER CABLE IN 3"C.
301	PUMP NO. 102 CONTROLS	120V	--	PUMP NO. 102	PUMP NO. 102 JUNCTION BOX	--	MANUFACTURER CABLE IN 2-1/2"C.
302	PUMP NO. 102 POWER	480V	85 HP	PUMP NO.102 JUNCTION BOX	PUMP STARTER	--	3#2/0, #6 GND., 2" C.
303	PUMP NO. 102 CONTROLS	120V	--	PUMP NO.102 JUNCTION BOX	PUMP STARTER	--	5#14 AWG, 1"C.
305	PUMP NO. 102 CONTROLS	120V	--	STARTER IN MOTOR CONTROL CENTER	CONTROL PANEL	--	12#14, 1"C.
306	PUMP NO. 102 CAPACITOR	480V	TBD	PUMP NO. 102 MOTOR STARTER	POWER FACTOR CORRECTION CAPACITOR	--	3#6, #8 GND., 2" C.
400	PUMP NO. 103 POWER	480V	85 HP	PUMP NO. 103	PUMP NO. 103 JUNCTION BOX	--	MANUFACTURER CABLE IN 3"C.
401	PUMP NO. 103 CONTROLS	120V	--	PUMP NO. 103	PUMP NO. 103 JUNCTION BOX	--	MANUFACTURER CABLE IN 2-1/2"C.
402	PUMP NO. 103 POWER	480V	85 HP	PUMP NO. 103 JUNCTION BOX	PUMP STARTER	--	3#2/0 AWG., #6 GND., 2"C.

NO.	DATE	REVISION	APP.

FOR INTERIM REVIEW
ONLY NOT INTENDED FOR
PERMIT, BIDDING OR
CONSTRUCTION PURPOSES.
ENGINEER:
HOSS FOROUZAN
P.E. SERIAL NO.77748
05/18/2026

GAI
Gupta & Associates, Inc.
CONSULTING ENGINEERING
Registration No. F-2593
302 Dennis St.,
Houston, Texas 77006
Tel: 713-636-2936
Fax: 713-636-2987
email: hforouzan@gaiconsulting.com

IDS Engineering Group
13430 NW. Freeway
Suite 700
Houston, Tx. 77040
713.462.3178
TxEng Firm 2726
TxSurv Firm 10110700

CITY OF HOUSTON
HOUSTON PUBLIC WORKS

LIFT STATION RENEWAL
AND REPLACEMENT FY 2023

LOCKWOOD LIFT STATION
CONDUIT SCHEDULE–I

WBS NUMBER	FOR CITY OF HOUSTON USE ONLY
R–000267–0179–4	
DRAWING SCALE	
HORIZ: NONE VERT: NONE	
CITY OF HOUSTON PM	
NAWARAJ PANTA, P.E.	
SHEET NO. 59 OF 361	

DWG. NO.
LCK–E–12

IDS JOB No. 0057-085-00

PLOTTED: 5/12/2026 8:25 PM

FILE PATH: O:\H8108_Lift Station Rehabilitation And Reconstruction (IDS)\6 Drawings\Electrical\Working\Lockwood\H8108_LCK–E–12.dwg

	DESCRIPTION	SERVICE		ROUTING			CONDUIT & WIRE SIZE
		VOLTAGE	AMPS OR HP	FROM	TO	VIA	
403	PUMP NO. 103 CONTROLS	120V	--	PUMP NO. 103 JUNCTION BOX	CONTROL PANEL	--	5#14 AWG, 1"C.
405	PUMP NO. 103 CONTROLS	120V	--	STARTER IN MOTOR CONTROL CENTER	CONTROL PANEL	--	12#14, 1"C.
406	PUMP NO. 103 CAPACITOR	480V	TBD	PUMP NO. 103 MOTOR STARTER	POWER FACTOR CORRECTION CAPACITOR	--	3#6, #8 GND., 1"C.
500	PUMP NO. 104 POWER	480V	85 HP	PUMP NO. 104	PUMP NO. 104 JUNCTION BOX	--	MANUFACTURER CABLE IN 3"C.
501	PUMP NO. 104 CONTROLS	120V	--	PUMP NO. 104	PUMP NO. 104 JUNCTION BOX	--	MANUFACTURER CABLE IN 2-1/2"C.
502	PUMP NO. 104 POWER	480V	85 HP	PUMP NO. 104 JUNCTION BOX	PUMP STARTER	--	3#2/0 AWG., #6 GND., 2"C.
503	PUMP NO. 104 CONTROLS	120V	--	PUMP NO.104 JUNCTION BOX	PUMP STARTER	--	5#14 AWG, 1"C.
505	PUMP NO. 104 CONTROLS	120V	--	STARTER IN MOTOR CONTROL CENTER	CONTROL PANEL	--	12#14, 1"C.
506	PUMP NO. 104 CAPACITOR	480V	TBD	PUMP NO. 104 MOTOR STARTER	POWER FACTOR CORRECTION CAPACITOR	--	3#6, #8 GND., 1"C.
600	PUMP NO. 105 POWER	480V	85 HP	PUMP NO. 105	PUMP NO. 105 JUNCTION BOX	--	MANUFACTURER CABLE IN 3"C.
601	PUMP NO. 105 CONTROLS	120V	--	PUMP NO. 105	PUMP NO. 105 JUNCTION BOX	--	MANUFACTURER CABLE IN 2-1/2"C.
602	PUMP NO. 105 POWER	480V	85 HP	PUMP NO. 105 JUNCTION BOX	PUMP STARTER	--	3#2/0 AWG., #6 GND., 2"C.
603	PUMP NO. 105 CONTROLS	120V	--	PUMP NO. 105 JUNCTION BOX	CONTROL PANEL	--	5#14 AWG, 1"C.
605	PUMP NO. 105 CONTROLS	120V	--	STARTER IN MOTOR CONTROL CENTER	CONTROL PANEL	--	12#14, 1"C.
606	PUMP NO. 105 CAPACITOR	480V	TBD	PUMP NO. 105 MOTOR STARTER	POWER FACTOR CORRECTION CAPACITOR	--	3#6, #8 GND., 1"C.
700	PUMP NO. 106 POWER	480V	85 HP	PUMP NO. 106	PUMP NO. 106 JUNCTION BOX	--	MANUFACTURER CABLE IN 3"C.
701	PUMP NO. 106 CONTROLS	120V	--	PUMP NO. 106	PUMP NO. 106 JUNCTION BOX	--	MANUFACTURER CABLE IN 2-1/2"C.
702	PUMP NO. 106 POWER	480V	85 HP	PUMP NO. 106 JUNCTION BOX	PUMP STARTER	--	3#2/0 AWG., #6 GND., 2"C.
703	PUMP NO. 106 CONTROLS	120V	--	PUMP NO.106 JUNCTION BOX	PUMP STARTER	--	5#14 AWG, 1"C.
705	PUMP NO. 106 CONTROLS	120V	--	STARTER IN MOTOR CONTROL CENTER	CONTROL PANEL	--	12#14 1"C.
706	PUMP NO. 106 CAPACITOR	480V	TBD	PUMP NO. 106 MOTOR STARTER	POWER FACTOR CORRECTION CAPACITOR	--	3#6, #8 GND., 1"C.
800	LIGHTING TRANSFORMER FEEDER	480V	70A	MOTOR CONTROL CENTER	LIGHTING TRANSFORMER	--	2#4, #6 GND., 1"C.
801	LIGHTING TRANSFORMER GROUND	--	--	LIGHTING PANEL	GROUND FIELD	--	#6 GND., 1"C.
802	LIGHTING PANEL FEEDER	120/240V	--	LIGHTING TRANSFORMER	LIGHTING PANEL	--	3#1, #6 GND., 1-1/4"C.
900	INTRUSION ALARM	24VDC	--	MOTION SWITCH	CONTROL PANEL	--	2#14 AWG., 3/4"C.
1000	LEVEL TRANSMITTER LT-1	24VDC	--	TRANSMITTER JUNCTION BOX	TRANSMITTER JUNCTION BOX	--	MANUFACTURER CABLE IN 2-1/2"C.
1000	LEVEL TRANSMITTER LT-1	24VDC	--	TRANSMITTER JUNCTION BOX	TRANSMITTER JUNCTION BOX	--	MANUFACTURER CABLE IN 2-1/2"C.
1001	LEVEL TRANSMITTER LT-2	24VDC	--	TRANSMITTER JUNCTION BOX	TRANSMITTER JUNCTION BOX	--	MANUFACTURER CABLE IN 2-1/2"C.
1002	COMBINED LEVEL TRANSMITTERS & FLOAT SWITCH	24VDC	--	CONTROL PANEL	TRANSMITTER JUNCTION BOX	--	2-TRI, 4#14, 2"C.
1003	WELL FLOAT SWITCHES	24VDC	--	TRANSMITTER JUNCTION BOX	FLOAT SWITCH NO.1 & NO.2	--	MANUFACTURER CABLE IN 2-1/2"C.
1100	120VAC FOR RECEPTACLE	--	--	LIGHTING PANEL	RECEPTACLE ON BUILDING EXTERIOR WALL	--	2#12, #12G, 1"C.
1200	120VAC FOR RECEPTACLE	--	--	LIGHTING PANEL	RECEPTACLE ON BUILDING EXTERIOR WALL	--	2#12, #12G, 1"C.
1300	SITE LIGHTING	120V	--	LIGHTING PANEL	SITE LIGHTS	VIA SITE LIGHT SWITCH	2#12, #12G, 1"C.

NO.	DATE	REVISION	APP.

FOR INTERIM REVIEW
ONLY NOT INTENDED FOR
PERMIT, BIDDING OR
CONSTRUCTION PURPOSES.
ENGINEER:
HOSS FOROUZAN
P.E. SERIAL NO.77748
05/18/2026

GAI
Gupta & Associates, Inc.
CONSULTING ENGINEERING
Registration No. F-2593
302 Dennis St.,
Houston, Texas 77006
Tel: 713-636-2936
Fax: 713-636-2987
email: hforouzan@gaiconsulting.com

IDS Engineering Group
13430 NW. Freeway
Suite 700
Houston, Tx. 77040
713.462.3178
TxEng Firm 2726
TxSurv Firm 10110700

CITY OF HOUSTON
HOUSTON PUBLIC WORKS

LIFT STATION RENEWAL
AND REPLACEMENT FY 2023

LOCKWOOD LIFT STATION
CONDUIT SCHEDULE–II

WBS NUMBER	FOR CITY OF HOUSTON USE ONLY
R–000267–0179–4	
DRAWING SCALE	
HORIZ: NONE VERT: NONE	
CITY OF HOUSTON PM	
NAWARAJ PANTA, P.E.	
SHEET NO. 60 OF 361	

DWG. NO.
LCK–E–13

IDS JOB No. 0057-085-00

PLOTTED: 5/12/2026 8:25 PM

FILE PATH: O:\H8108_Lift Station Rehabilitation And Reconstruction (IDS)\6 Drawings\Electrical\Working\Lockwood\H8108_LCK–E–13.dwg

PLOTTED: 5/12/2026 8:54 PM

HMI

CONTROL PANEL PLC

CONTROL BUILDING

480V

INFLUENT PUMPS MCC

INFLUENT PUMP NO. 1
INFLUENT PUMP NO. 2
INFLUENT PUMP NO. 3
INFLUENT PUMP NO. 4
INFLUENT PUMP NO. 5

SEAL FAIL ALARM (MA) | MOTOR OVERLOAD ALARM (MO) | MOTOR CURRENT (II) | HIGH TEMP ALARM (TH) | IN HAND (HI) | IN AUTO (IA) | ON/OFF (YFS) | START/STOP (YCS)

INFLUENT PUMP NO. 6

PRIMARY PLC | BACKUP PLC

INFLUENT PUMP CONTROL PANEL

ALARMS RESET | OIT

TO SHEET LCK-I-2

H/O/A | RUN

LCK-I-2

LT 1 / LE 1

LT 2 / LE 2

WET WELL

FS2 HIGH-HIGH LEVEL FLOAT SWITCH

FS1 HIGH LEVEL FLOAT SWITCH

LSH 3A / TSH 3A

LSH 4A / TSH 4A

LSH 2A / TSH 2A

LSH 5A / TSH 5A

LSH 1A / TSH 1A

LSH 6A / TSH 6A

XX"-DIP

INFLUENT DISCHARGE

INFLUENT DISCHARGE

FOR INTERIM REVIEW ONLY NOT INTENDED FOR PERMIT, BIDDING OR CONSTRUCTION PURPOSES.
ENGINEER:
HOSS FOROUZAN
P.E. SERIAL NO.77748
05/18/2026

GAI
Gupta & Associates, Inc.
CONSULTING ENGINEERING
Registration No. F-2593
302 Dennis St.,
Houston, Texas 77006
Tel: 713-636-2936
Fax: 713-636-2987
email: hforouzan@gaiconsulting.com

IDS Engineering Group
13430 NW. Freeway
Suite 700
Houston, Tx. 77040
713.462.3178
TxEng Firm 2726
TxSurv Firm 10110700

CITY OF HOUSTON
HOUSTON PUBLIC WORKS

LIFT STATION RENEWAL AND REPLACEMENT FY 2023

LOCKWOOD LIFT STATION P&ID DIAGRAM–I

WBS NUMBER	FOR CITY OF HOUSTON USE ONLY
R–000267–0179–4	
DRAWING SCALE	
HORIZ: NONE VERT: NONE	
CITY OF HOUSTON PM	
NAWARAJ PANTA, P.E.	
SHEET NO. 61 OF 361	

DWG. NO. LCK–I–01

NO. | DATE | REVISION | APP.

FILE PATH: O:\H8108_Lift Station Rehabilitation And Reconstruction (IDS)\6 Drawings\Instrumentation And Control\Working\Lockwood\H8108_LCK–I–01.dwg

IDS JOB No. 0057-085-00

PLOTTED: 5/12/2026 8:54 PM

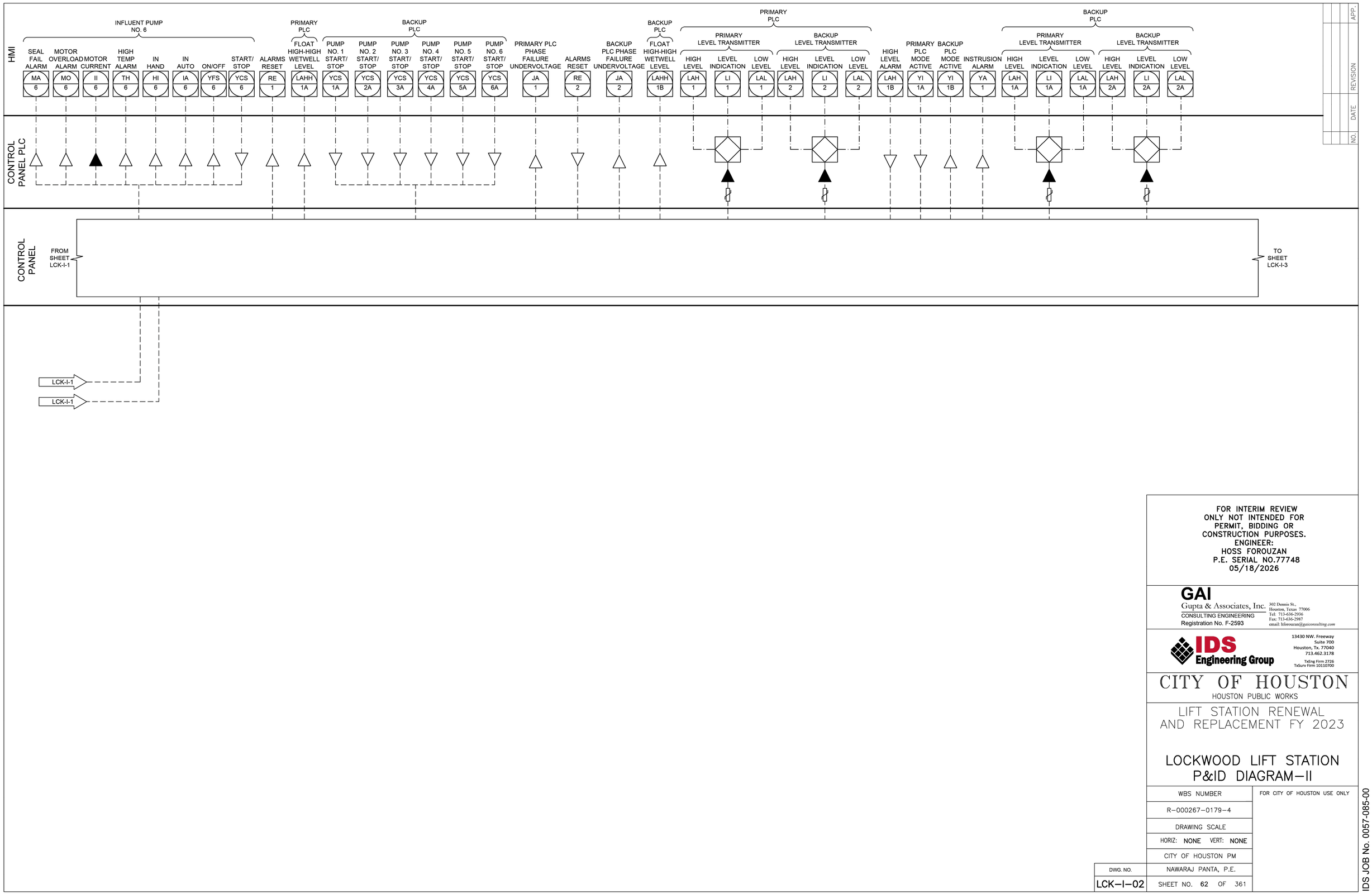

NO.	DATE	REVISION	APP.

FOR INTERIM REVIEW
ONLY NOT INTENDED FOR
PERMIT, BIDDING OR
CONSTRUCTION PURPOSES.
ENGINEER:
HOSS FOROUZAN
P.E. SERIAL NO.77748
05/18/2026

GAI
Gupta & Associates, Inc.
CONSULTING ENGINEERING
Registration No. F-2593
302 Dennis St.,
Houston, Texas 77006
Tel: 713-636-2936
Fax: 713-636-2987
email: hforouzan@gaiconsulting.com

IDS Engineering Group
13430 NW. Freeway
Suite 700
Houston, Tx. 77040
713.462.3178
TxEng Firm 2726
TxSurv Firm 10110700

CITY OF HOUSTON
HOUSTON PUBLIC WORKS

LIFT STATION RENEWAL AND REPLACEMENT FY 2023

LOCKWOOD LIFT STATION P&ID DIAGRAM–II

WBS NUMBER	FOR CITY OF HOUSTON USE ONLY
R–000267–0179–4	
DRAWING SCALE	
HORIZ: NONE VERT: NONE	
CITY OF HOUSTON PM	
NAWARAJ PANTA, P.E.	
SHEET NO. 62 OF 361	

DWG. NO. LCK–I–02

IDS JOB No. 0057-085-00

FILE PATH: O:\H8108_Lift Station Rehabilitation And Reconstruction (IDS)\6 Drawings\Instrumentation And Control\Working\Lockwood\H8108_LCK–I–02.dwg

PLOTTED: 5/12/2026 8:54 PM

FILE PATH: O:\H8108_Lift Station Rehabilitation And Reconstruction (IDS)\6 Drawings\Instrumentation And Control\Working\Lockwood\H8108_LCK-I-03.dwg

HMI

CONTROL PANEL PLC

CONTROL PANEL

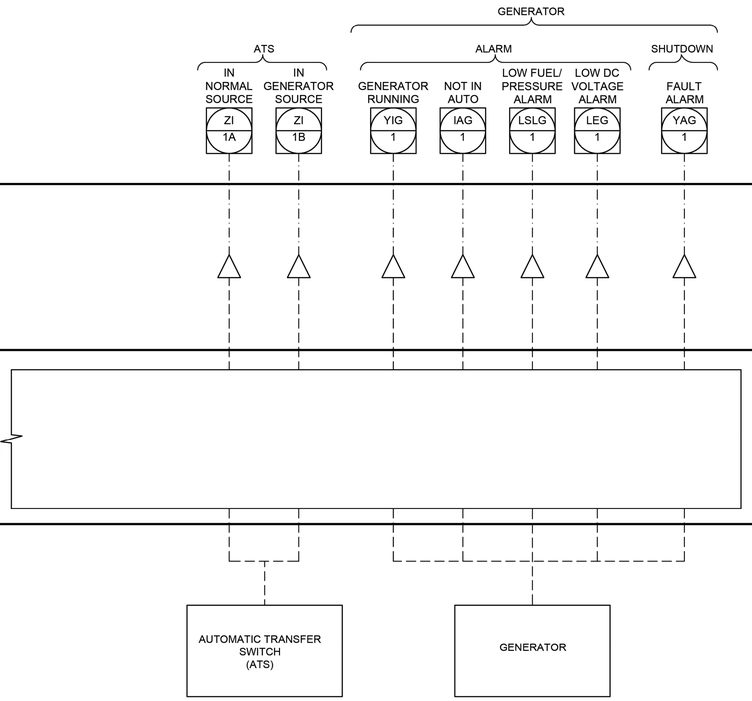

NO.	DATE	REVISION	APP.

FOR INTERIM REVIEW
ONLY NOT INTENDED FOR
PERMIT, BIDDING OR
CONSTRUCTION PURPOSES.
ENGINEER:
HOSS FOROUZAN
P.E. SERIAL NO.77748
05/18/2026

GAI
Gupta & Associates, Inc.
CONSULTING ENGINEERING
Registration No. F-2593
302 Dennis St.,
Houston, Texas 77006
Tel: 713-636-2936
Fax: 713-636-2987
email: hforouzan@gaiconsulting.com

IDS Engineering Group
13430 NW. Freeway
Suite 700
Houston, Tx. 77040
713.462.3178
TxEng Firm 2726
TxSurv Firm 10110700

CITY OF HOUSTON
HOUSTON PUBLIC WORKS

LIFT STATION RENEWAL AND REPLACEMENT FY 2023

LOCKWOOD LIFT STATION P&ID DIAGRAM–III

WBS NUMBER	FOR CITY OF HOUSTON USE ONLY
R–000267–0179–4	
DRAWING SCALE	
HORIZ: NONE VERT: NONE	
CITY OF HOUSTON PM	
NAWARAJ PANTA, P.E.	
SHEET NO. 63 OF 361	

DWG. NO.
LCK–I–03

IDS JOB No. 0057-085-00

PLOTTED: 5/12/2026 8:54 PM

FILE PATH: O:\H8108_Lift Station Rehabilitation And Reconstruction (IDS)\6 Drawings\Instrumentation And Control\Working\Lockwood\H8108_LCK-I-04.dwg

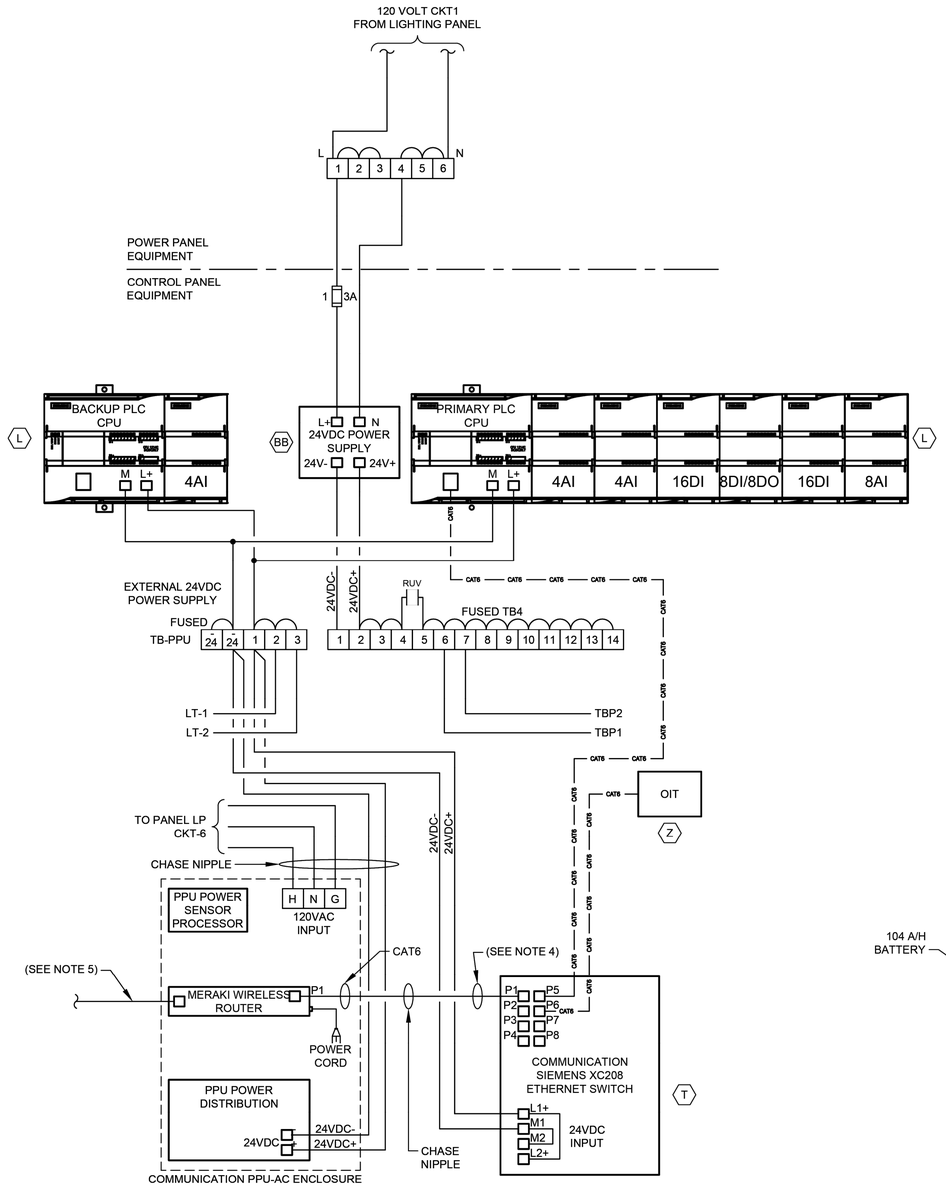

CONTROL POWER &
COMMUNICATIONS WIRING
DIAGRAM
NTS
(SEE NOTE 2 & 6)

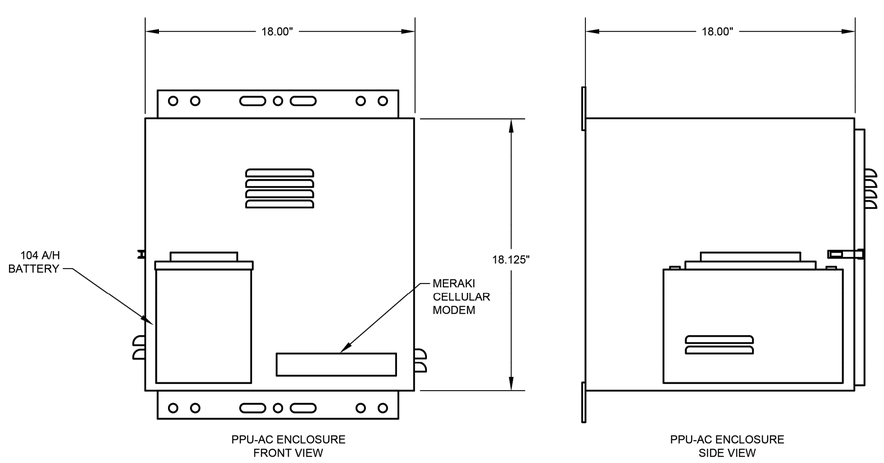

PPU-AC ENCLOSURE
FRONT VIEW

PPU-AC ENCLOSURE
SIDE VIEW

PPU-AC
CONTROL ENCLOSURE
ELEVATION
NTS
(SEE NOTE 7)

NOTES:

1. FOR DESCRIPTION AND RATINGS OF ITEMS INDICATED WITH ITEM TAG, SEE DEVICE RATINGS SCHEDULE.
2. REFER TO SPEC SECTION 16120 FOR CONDUCTOR COLOR CODE.
3. THE PLC POWER SUPPLY SHALL FEED THE 24VDC I/O.
4. CAT6 ETHERNET CABLE FOR MERAKI CELLULAR ROUTER (P1).
5. CAT6 POE CABLE TO RADIO.
6. COMMUNICATION PPU-AC & SCADA SHALL BE PROVIDED BY CONTRACTOR INCLUDING TO RUN CONDUITS & WIRES.
7. COORDINATE WITH VENDOR TO PROVIDE PROPER VENTILATION WHERE APPLICABLE.

GENERAL NOTES:

1. NO ELECTRICAL MATERIAL, APPARATUS, DEVICES, APPLIANCES, FIXTURES, OR EQUIPMENT SHALL BE SOLD OR INSTALLED IN THE CITY UNLESS THEY ARE IN CONFORMANCE WITH THE PROVISIONS OF SECTION 508 CITY OF HOUSTON ELECTRICAL CODE, THE LAWS OF THE STATE OF TEXAS AND ANY APPLICABLE RULES AND REGULATIONS ISSUED UNDER THE AUTHORITY OF THE STATE STATUES. THE MAKER'S NAME, TRADEMARK, OR OTHER IDENTIFICATION SYMBOL SHALL BE PLACED ON ALL ELECTRICAL MATERIALS, APPARATUS, DEVICES, APPLIANCES, FIXTURES, AND EQUIPMENT USED OR INSTALLED UNDER THE PROVISIONS OF THIS CODE. ALL ELECTRICAL MATERIALS AND EQUIPMENT SHALL BE LISTED AND LABELED FOR THE INTENDED USE AND SHALL BE INCLUDED IN A LIST PUBLISHED BY AN APPROVAL AGENCY.

NO.	DATE	REVISION	APP.

FOR INTERIM REVIEW
ONLY NOT INTENDED FOR
PERMIT, BIDDING OR
CONSTRUCTION PURPOSES.
ENGINEER:
HOSS FOROUZAN
P.E. SERIAL NO.77748
05/18/2026

GAI
Gupta & Associates, Inc.
CONSULTING ENGINEERING
Registration No. F-2593
302 Dennis St.,
Houston, Texas 77006
Tel: 713-636-2936
Fax: 713-636-2987
email: hforouzan@gaiconsulting.com

IDS Engineering Group
13430 NW. Freeway
Suite 700
Houston, Tx. 77040
713.462.3178
TxEng Firm 2726
TxSurv Firm 10110700

CITY OF HOUSTON
HOUSTON PUBLIC WORKS

LIFT STATION RENEWAL AND REPLACEMENT FY 2023

LOCKWOOD LIFT STATION COMMUNICATION DIAGRAM

WBS NUMBER	FOR CITY OF HOUSTON USE ONLY
R-000267-0179-4	
DRAWING SCALE	
HORIZ: NTS VERT: NTS	
CITY OF HOUSTON PM	
NAWARAJ PANTA, P.E.	
SHEET NO. 64 OF 361	

DWG. NO. LCK-I-04

IDS JOB No. 0057-085-00

PLOTTED: 5/12/2026 8:55 PM

EQUIPMENT AND DEVICE SCHEDULE

ITEM	QUANTITY	DESCRIPTION
A	1	SINGLE CHANNEL INTRINSICALLY SAFE RELAY
B	2	ANALOG SIGNAL ISOLATOR
C	6	PUMP PROTECTION MODULE
D	*	NOT USED
E	6	HAND-OFF-AUTO SWITCH, 3 POSITION, HEAVY-DUTY OIL TIGHT WITH 2 SETS OF CONTACT BLOCKS (PUMP CONTROL)
F	6	INDICATING LIGHT, HEAVY DUTY, OILTIGHT, RED, 24 VDC, LED, WITH "RUN" LEGEND
G	*	NOT USED.
H	1	SWITCH FOR CABINET LIGHT, 120V, 20A, SPST
I	2	DUPLEX RECEPTACLE, 120V, 20A, 2 WIRE, GROUNDED, GFCI TYPE
J	1	24" LED STRIP LIGHT 120V SUITABLE FOR ZERO DEGREE OPERATION.
K	*	NAMEPLATES, SEE SPECIFICATIONS (SEE NAMEPLATE SCHEDULE)
L	2	PROGRAMMABLE LOGIC CONTROLLER WITH EXPANSION UNIT
M	*	CONTROL RELAY 24VDC RELAY WITH THREE FORM C CONTACTS AND 11 PIN SOCKET BASE
N	-	NOT USED
O	-	NOT USED
P	1	NEMA 12 GASKETED STEEL ENCLOSURES WITHOUT VENTS 72" H X 20" D X 72" W
Q	*	TERMINAL BLOCK
R	1	WIRE DUCT 2" WIDE X 2" DEEP MINIMUM
S	1	GROUND BUS
T	1	COMMUNICATION ETHERNET SWITCH
U	9	CARTRIDGE
V	1	PUSHBUTTON, BLACK WITH RESET LEGEND
W	-	NOT USED
X	*	FUSED TERMINAL BLOCKS
Y	1	POWER SURGE PROTECTOR - CONTROL POWER
Z	1	PROGRAMMING SCREEN (OIT)
AA	*	120VAC SYSTEM FUSES
BB	1	120VAC - 24VDC POWER SUPPLY, 5A
CC	*	NOT USED
DD	2	INDICATING LIGHT, HEAVY DUTY, OILTIGHT, GREEN, 24VDC, LED WITH "BACKUP PLC" & "PRIMARY PLC" LEGEND
EE	2	ANALOG I/O SURGE SUPPRESSOR
FF	-	NOT USED

* - AS SCHEDULED

NAMEPLATE SCHEDULE

DESIGNATION	ENGRAVED
N1	PUMP STATION DESIGNATION
N2	PUMP NO. 1
N3	PUMP NO. 2
N4	PUMP NO. 3
N5	PUMP NO. 4
N6	PUMP NO. 5
N7	PUMP NO. 6

DESIGNATION	ENGRAVED
N8	NOT USED.
N9	NOT USED.
N10	PROGRAMMING SCREEN
N11	NOT USED.
N12	PRIMARY PLC
N13	BACKUP PLC
N14	MOTOR DATA HORSEPOWER (OUTPUT) ---------- RPM AT FULL LOAD ---------- TIME RATING ---------- FREQUENCY ---------- NUMBER OF PHASES ---------- MODEL NUMBER ---------- RATED VOLTAGE ---------- SERVICE FACTOR ---------- FULL LOAD AMPS ---------- INSULATION CLAS ---------- NEMA DESIGN LETTER ---------- TEMPERATURE RISE ---------- NEMA FRAME SIZE ---------- DATE OF MANUFACTURE ---------- THERMO PROTECTION (IF REQUIRED) -- MOISTURE PROTECTION (IF REQUIRED)-

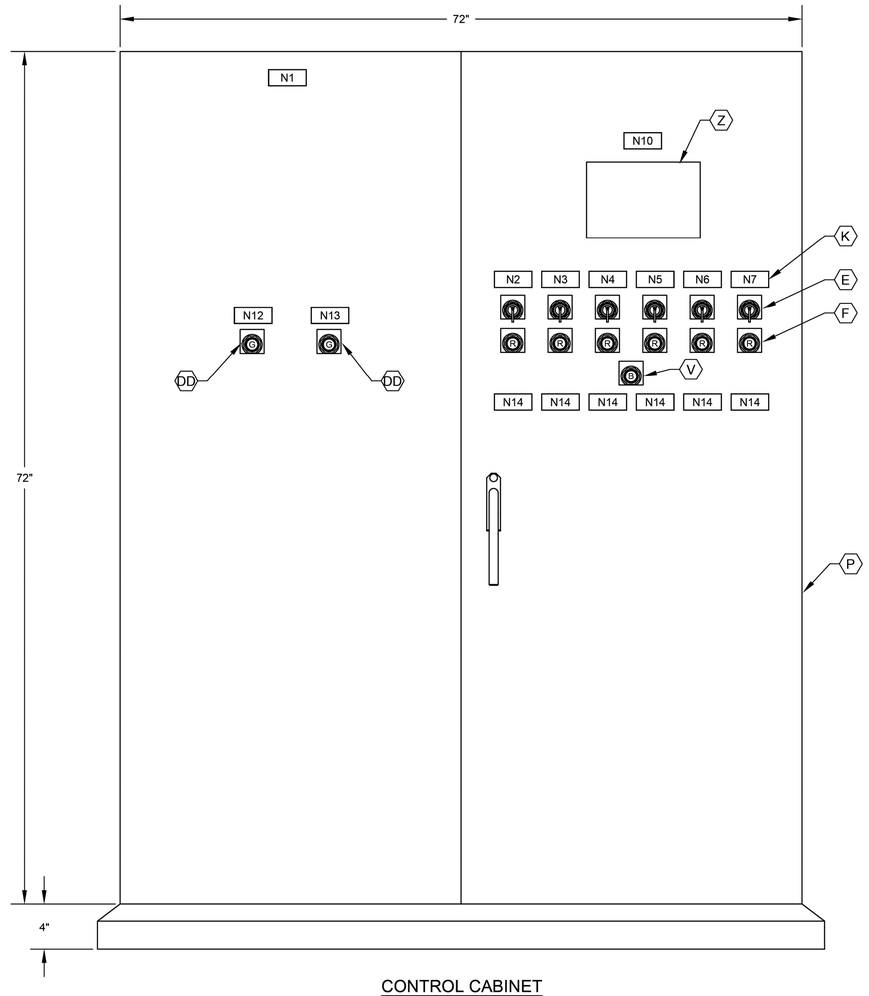

CONTROL CABINET
FRONT DOOR ELEVATION

NOTES:

1. NAMEPLATES SHALL BE MOUNTED TO PANELS USING STAINLESS STEEL HARDWARE.
2. REFER SPECIFICATIONS FOR ALL PANEL COMPONENTS.

GENERAL NOTES:

3. NO ELECTRICAL MATERIAL, APPARATUS, DEVICES, APPLIANCES, FIXTURES, OR EQUIPMENT SHALL BE SOLD OR INSTALLED IN THE CITY UNLESS THEY ARE IN CONFORMANCE WITH THE PROVISIONS OF SECTION 508 CITY OF HOUSTON ELECTRICAL CODE, THE LAWS OF THE STATE OF TEXAS AND ANY APPLICABLE RULES AND REGULATIONS ISSUED UNDER THE AUTHORITY OF THE STATE STATUES. THE MAKER'S NAME, TRADEMARK, OR OTHER IDENTIFICATION SYMBOL SHALL BE PLACED ON ALL ELECTRICAL MATERIALS, APPARATUS, DEVICES, APPLIANCES, FIXTURES, AND EQUIPMENT USED OR INSTALLED UNDER THE PROVISIONS OF THIS CODE. ALL ELECTRICAL MATERIALS AND EQUIPMENT SHALL BE LISTED AND LABELED FOR THE INTENDED USE AND SHALL BE INCLUDED IN A LIST PUBLISHED BY AN APPROVAL AGENCY.

NO.	DATE	REVISION	APP.

FOR INTERIM REVIEW
ONLY NOT INTENDED FOR
PERMIT, BIDDING OR
CONSTRUCTION PURPOSES.
ENGINEER:
HOSS FOROUZAN
P.E. SERIAL NO.77748
05/18/2026

GAI
Gupta & Associates, Inc.
CONSULTING ENGINEERING
Registration No. F-2593
302 Dennis St.,
Houston, Texas 77006
Tel: 713-636-2936
Fax: 713-636-2987
email: hforouzan@gaiconsulting.com

IDS Engineering Group
13430 NW. Freeway
Suite 700
Houston, Tx. 77040
713.462.3178
TxEng Firm 2726
TxSurv Firm 10110700

CITY OF HOUSTON
HOUSTON PUBLIC WORKS

LIFT STATION RENEWAL
AND REPLACEMENT FY 2023

LOCKWOOD LIFT STATION
CONTROL PANEL
EQUIP. LAYOUT & SCHEDULE

WBS NUMBER	FOR CITY OF HOUSTON USE ONLY
R-000267-0179-4	
DRAWING SCALE	
HORIZ: NONE VERT: NONE	
CITY OF HOUSTON PM	
NAWARAJ PANTA, P.E.	
SHEET NO. 65 OF 361	

DWG. NO.
LCK-I-05

IDS JOB No. 0057-085-00

FILE PATH: O:\H8108_Lift Station Rehabilitation And Reconstruction (IDS)\6 Drawings\Instrumentation And Control\Working\Lockwood\H8108_LCK-I-05.dwg

PLOTTED: 5/12/2026 8:55 PM

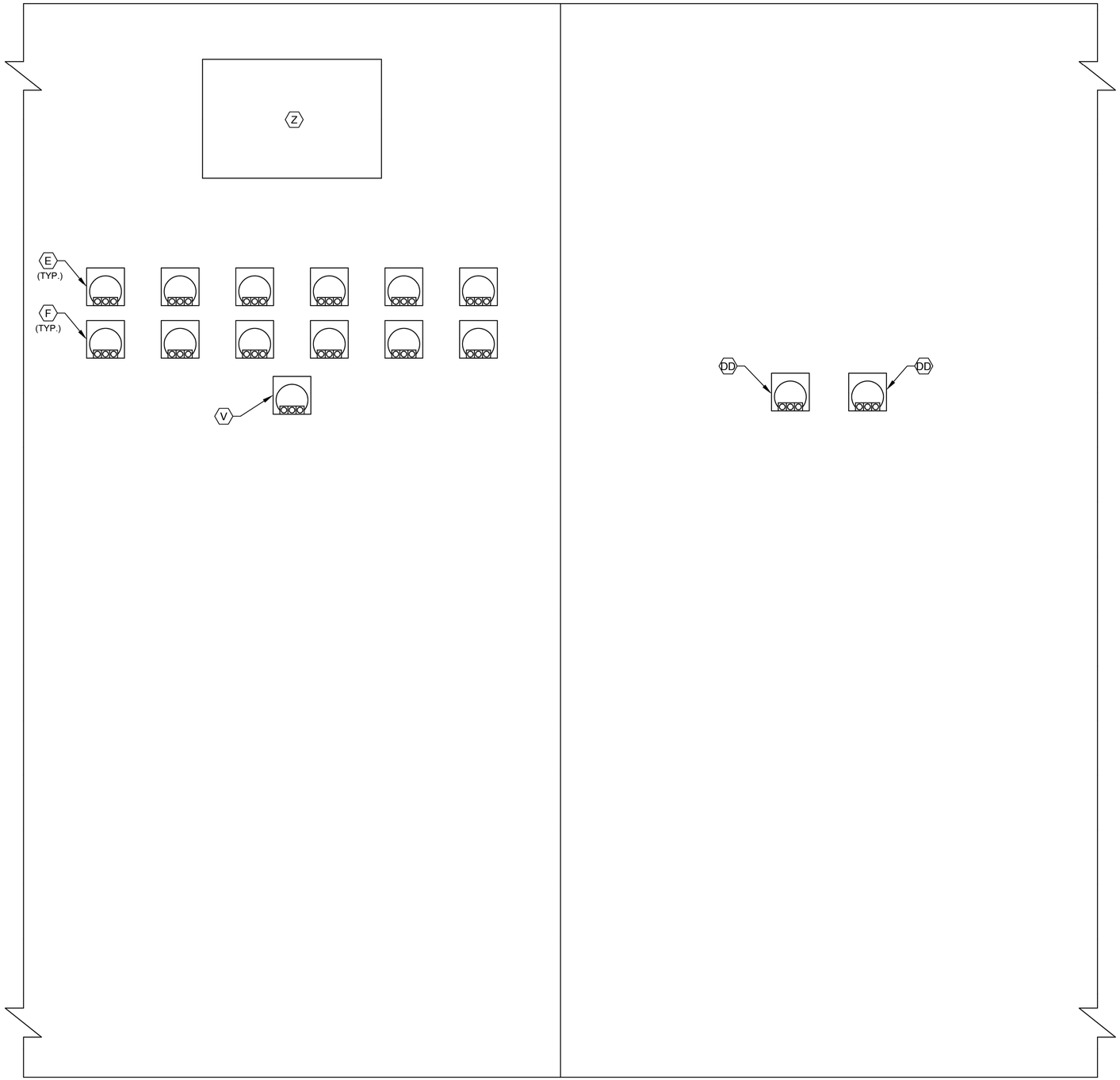

CONTROL CABINET
BACK DOOR ELEVATION

NOTES:

1. SEE SHEET LCK-I-4 FOR EQUIPMENT SCHEDULE.

GENERAL NOTES:

1. NO ELECTRICAL MATERIAL, APPARATUS, DEVICES, APPLIANCES, FIXTURES, OR EQUIPMENT SHALL BE SOLD OR INSTALLED IN THE CITY UNLESS THEY ARE IN CONFORMANCE WITH THE PROVISIONS OF SECTION 508 CITY OF HOUSTON ELECTRICAL CODE, THE LAWS OF THE STATE OF TEXAS AND ANY APPLICABLE RULES AND REGULATIONS ISSUED UNDER THE AUTHORITY OF THE STATE STATUES. THE MAKER'S NAME, TRADEMARK, OR OTHER IDENTIFICATION SYMBOL SHALL BE PLACED ON ALL ELECTRICAL MATERIALS, APPARATUS, DEVICES, APPLIANCES, FIXTURES, AND EQUIPMENT USED OR INSTALLED UNDER THE PROVISIONS OF THIS CODE. ALL ELECTRICAL MATERIALS AND EQUIPMENT SHALL BE LISTED AND LABELED FOR THE INTENDED USE AND SHALL BE INCLUDED IN A LIST PUBLISHED BY AN APPROVAL AGENCY.

NO.	DATE	REVISION	APP.

FOR INTERIM REVIEW
ONLY NOT INTENDED FOR
PERMIT, BIDDING OR
CONSTRUCTION PURPOSES.
ENGINEER:
HOSS FOROUZAN
P.E. SERIAL NO.77748
05/18/2026

GAI
Gupta & Associates, Inc.
CONSULTING ENGINEERING
Registration No. F-2593
302 Dennis St.,
Houston, Texas 77006
Tel: 713-636-2936
Fax: 713-636-2987
email: hforouzan@gaiconsulting.com

IDS Engineering Group
13430 NW. Freeway
Suite 700
Houston, Tx. 77040
713.462.3178
TxEng Firm 2726
TxSurv Firm 10110700

CITY OF HOUSTON
HOUSTON PUBLIC WORKS

LIFT STATION RENEWAL
AND REPLACEMENT FY 2023

LOCKWOOD LIFT STATION
CONTROL PANEL
BACK PANEL ELEVATION

WBS NUMBER	FOR CITY OF HOUSTON USE ONLY
R-000267-0179-4	
DRAWING SCALE	
HORIZ: NONE VERT: NONE	
CITY OF HOUSTON PM	
NAWARAJ PANTA, P.E.	
SHEET NO. 66 OF 361	

DWG. NO.
LCK-I-06

IDS JOB No. 0057-085-00

FILE PATH: O:\H8108_Lift Station Rehabilitation And Reconstruction (IDS)\6 Drawings\Instrumentation And Control\Working\Lockwood\H8108_LCK-I-06.dwg

PLOTTED: 5/12/2026 8:55 PM

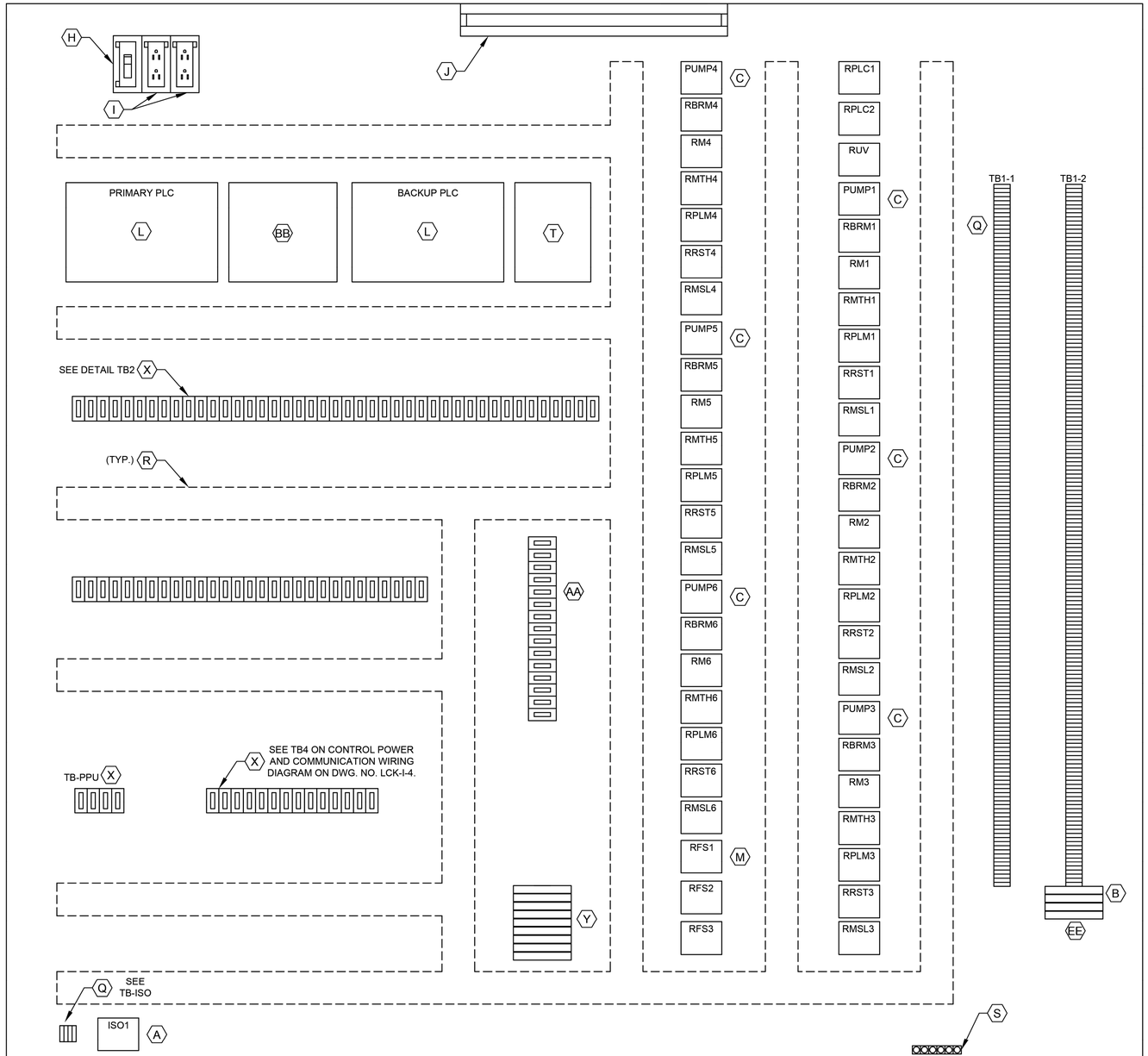

CONTROL PANEL ELEVATION

LEGEND	
TAG	DESCRIPTION
RMTH	MOTOR HIGH TEMPERATURE ALARM RELAY
RPLMP	PLC PUMP RUN RELAY
RRST	PUMP RESET AUX RELAY
RPLC	PLC MODE AUX RELAY
RM	PUMP RUN AUX RELAY
RUV	UNDER VOLTAGE RELAY
RBRM	BACKUP SYSTEM RUN RELAY
ISO	INTRINSICALLY SAFE RELAY
RFS	PUMP RUN FLOAT SWITCH RELAY
RMSL	MOTOR SEAL LEAK ALARM RELAY
RFLP	FLOAT LOCKOUT PUMP RELAY

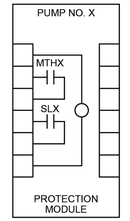

PUMP PROTECTION MODULE DETAIL, ITEM C

NOTE: REPLACE "X" WITH APPROPRIATE PUMP NO.

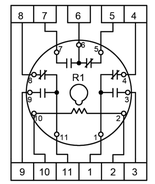

RELAY DETAIL ITEM M

NOTES:

1. SEE SHEET LCK-I-5 FOR EQUIPMENT SCHEDULE.

GENERAL NOTES:

1. NO ELECTRICAL MATERIAL, APPARATUS, DEVICES, APPLIANCES, FIXTURES, OR EQUIPMENT SHALL BE SOLD OR INSTALLED IN THE CITY UNLESS THEY ARE IN CONFORMANCE WITH THE PROVISIONS OF SECTION 508 CITY OF HOUSTON ELECTRICAL CODE, THE LAWS OF THE STATE OF TEXAS AND ANY APPLICABLE RULES AND REGULATIONS ISSUED UNDER THE AUTHORITY OF THE STATE STATUES. THE MAKER'S NAME, TRADEMARK, OR OTHER IDENTIFICATION SYMBOL SHALL BE PLACED ON ALL ELECTRICAL MATERIALS, APPARATUS, DEVICES, APPLIANCES, FIXTURES, AND EQUIPMENT USED OR INSTALLED UNDER THE PROVISIONS OF THIS CODE. ALL ELECTRICAL MATERIALS AND EQUIPMENT SHALL BE LISTED AND LABELED FOR THE INTENDED USE AND SHALL BE INCLUDED IN A LIST PUBLISHED BY AN APPROVAL AGENCY.

DETAIL TB-ISO
1500
1501
1503
1504

DETAIL TB1-1
L1A
L1N
SPARE
3
3N
SPARE
49
50
51
52
53
54
1004
1
24V-
24V-
SPARE
1002
2
11
1001
1001A
12
1003
1003A
34
3N
SPARE
SPARE
102
103
3P1
109
110
112
116
117
120
121
122
123
124
125
126
127
SPARE
SPARE
202
203
3P2
209
210
212
216
217
220
221
222
223
224
225
226
227

DETAIL TB1-2
SPARE
SPARE
302
303
3P3
309
310
312
316
317
320
321
322
323
324
325
326
327
SPARE
SPARE
402
403
3P4
409
410
412
416
417
420
421
422
423
424
425
426
427
SPARE
SPARE

DETAIL TB1-2
502
503
3P5
509
510
512
516
517
520
521
522
523
524
525
526
527
SPARE
SPARE
602
603
3P6
609
610
612
616
617
620
621
622
623
624
625
626
627

DETAIL TB2
36A
37A
50
52
54
52A
52A
54A
L+
M
35B
38B
41B
44B
SPARE
SPARE
47B
50B
53B
13B
13AB
B
L+
M
14B
14AB
14GB
119
SPARE
L+
M
13
13A
13G
14
14A
14G
1M
2M
1L
3
30
32
34
37
38
41
33B
45
18B
SPARE

DETAIL TB2
100
112
113
114
115
117
118
119
120
121
SPARE
200
212
213
214
215
217
218
219
220
221
SPARE
300
312
313
314
315
317
318
319
320
321
SPARE
400
412
413
414
415
417
418
419
420
421
SPARE

DETAIL TB2
500
512
513
514
515
517
518
519
520
521
SPARE
600
612
613
614
615
617
618
619
620
621
SPARE

FOR INTERIM REVIEW ONLY NOT INTENDED FOR PERMIT, BIDDING OR CONSTRUCTION PURPOSES.
ENGINEER:
HOSS FOROUZAN
P.E. SERIAL NO.77748
05/18/2026

GAI
Gupta & Associates, Inc.
CONSULTING ENGINEERING
Registration No. F-2593
302 Dennis St.,
Houston, Texas 77006
Tel: 713-636-2916
Fax: 713-636-2987
email: hforouzan@gaiconsulting.com

IDS Engineering Group
13430 NW. Freeway
Suite 700
Houston, Tx. 77040
713.462.3178
TxEng Firm 2726
TxSurv Firm 10110700

CITY OF HOUSTON
HOUSTON PUBLIC WORKS

LIFT STATION RENEWAL AND REPLACEMENT FY 2023

LOCKWOOD LIFT STATION CONTROL PANEL EQUIPMENT LAYOUT

WBS NUMBER	FOR CITY OF HOUSTON USE ONLY
R-000267-0179-4	
DRAWING SCALE	
HORIZ: NONE VERT: NONE	
CITY OF HOUSTON PM	
NAWARAJ PANTA, P.E.	
DWG. NO. LCK-I-07	SHEET NO. 67 OF 361

NO.	DATE	REVISION	APP.

FILE PATH: O:\H8108_Lift Station Rehabilitation And Reconstruction (IDS)\6 Drawings\Instrumentation And Control\Working\Lockwood\H8108_LCK-I-07.dwg

IDS JOB No. 0057-085-00

PLOTTED: 5/12/2026 8:55 PM

FILE PATH: O:\H8108_Lift Station Rehabilitation And Reconstruction (IDS)\6 Drawings\Instrumentation And Control\Working\Lockwood\H8108_LCK-I-08.dwg

NO.	DATE	REVISION	APP.

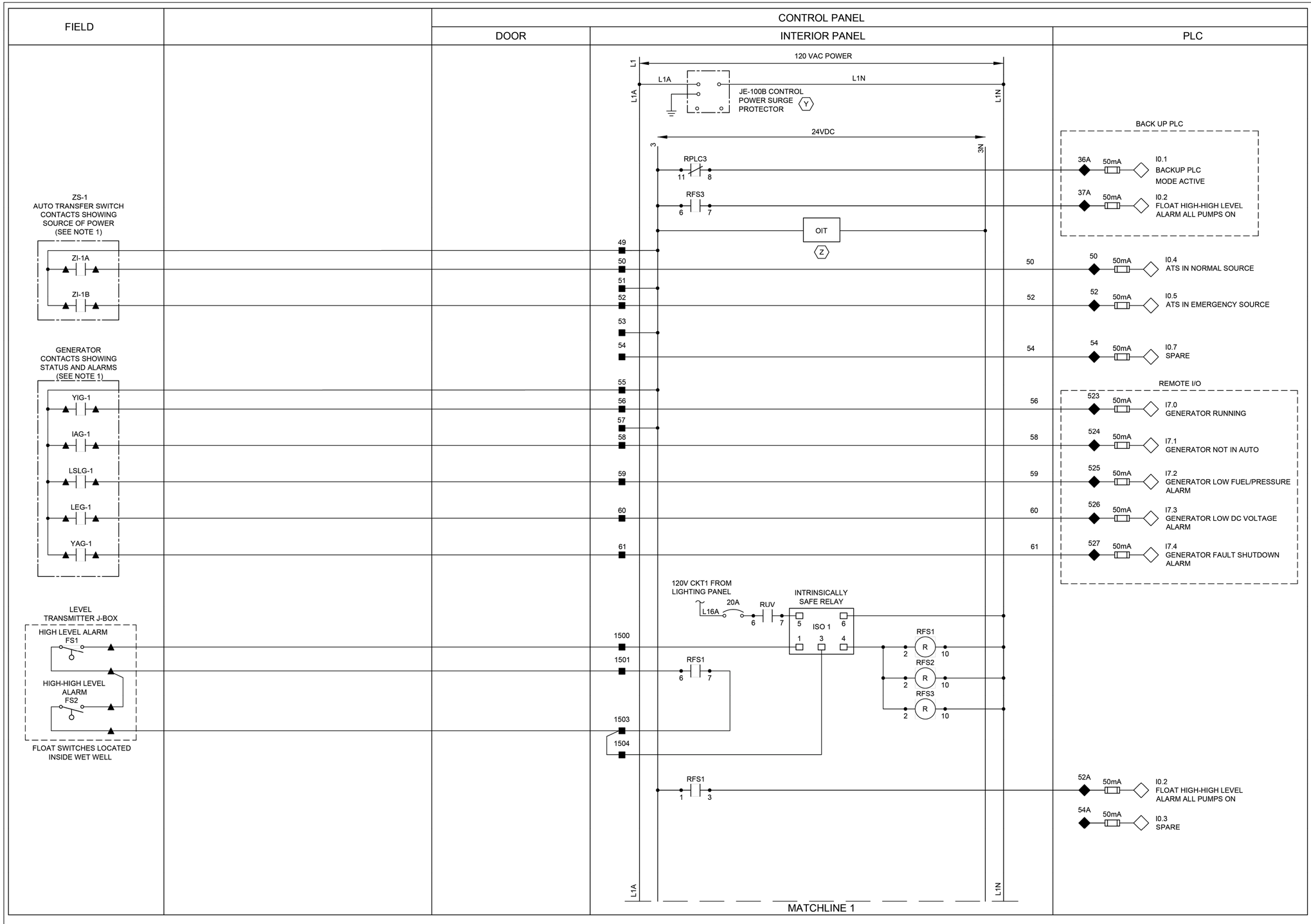

NOTES:

1. PROVIDE AUTO TRANSFER SWITCH AND GENERATOR DRY CONTACT.
2. ALL FLOAT CONTROL CIRCUIT WIRES COLOR SHALL BE YELLOW.

GENERAL NOTES:

1. NO ELECTRICAL MATERIAL, APPARATUS, DEVICES, APPLIANCES, FIXTURES, OR EQUIPMENT SHALL BE SOLD OR INSTALLED IN THE CITY UNLESS THEY ARE IN CONFORMANCE WITH THE PROVISIONS OF SECTION 508 CITY OF HOUSTON ELECTRICAL CODE, THE LAWS OF THE STATE OF TEXAS AND ANY APPLICABLE RULES AND REGULATIONS ISSUED UNDER THE AUTHORITY OF THE STATE STATUES. THE MAKER'S NAME, TRADEMARK, OR OTHER IDENTIFICATION SYMBOL SHALL BE PLACED ON ALL ELECTRICAL MATERIALS, APPARATUS, DEVICES, APPLIANCES, FIXTURES, AND EQUIPMENT USED OR INSTALLED UNDER THE PROVISIONS OF THIS CODE. ALL ELECTRICAL MATERIALS AND EQUIPMENT SHALL BE LISTED AND LABELED FOR THE INTENDED USE AND SHALL BE INCLUDED IN A LIST PUBLISHED BY AN APPROVAL AGENCY.

LEGEND

- △ DEVICE OR FIELD TERMINAL LOCATED AT MOTOR
- ✳ DEVICE OR FIELD TERMINAL LOCATED REMOTE
- □ DEVICE OR FIELD TERMINAL LOCATED AT MCC/POWER PANEL
- ■ FIELD TERMINAL LOCATED AT CONTROL PANEL
- ▲ REMOTE TERMINAL
- ● DEVICE TERMINAL NO.
- ◆ PLC INTERFACE TERMINAL

FOR INTERIM REVIEW
ONLY NOT INTENDED FOR
PERMIT, BIDDING OR
CONSTRUCTION PURPOSES.
ENGINEER:
HOSS FOROUZAN
P.E. SERIAL NO.77748
05/18/2026

GAI
Gupta & Associates, Inc.
CONSULTING ENGINEERING
Registration No. F-2593
302 Dennis St.,
Houston, Texas 77006
Tel: 713-636-2936
Fax: 713-636-2987
email: hforouzan@gaiconsulting.com

IDS Engineering Group
13430 NW. Freeway
Suite 700
Houston, Tx. 77040
713.462.3178
TxEng Firm 2726
TxSurv Firm 10110700

CITY OF HOUSTON
HOUSTON PUBLIC WORKS

LIFT STATION RENEWAL AND REPLACEMENT FY 2023

LOCKWOOD LIFT STATION CONTROL PANEL CONTROL WIRING DIAGRAM–I

WBS NUMBER	FOR CITY OF HOUSTON USE ONLY
R–000267–0179–4	
DRAWING SCALE	
HORIZ: NONE VERT: NONE	
CITY OF HOUSTON PM	
NAWARAJ PANTA, P.E.	
DWG. NO. LCK–I–08	SHEET NO. 68 OF 361

IDS JOB No. 0057-085-00

PLOTTED: 5/12/2026 8:55 PM

FILE PATH: O:\H8108_Lift Station Rehabilitation And Reconstruction (IDS)\6 Drawings\Instrumentation And Control\Working\Lockwood\H8108_LCK-I-09.dwg

FIELD	MOTOR CONTROL CENTER (INDOOR)	CONTROL PANEL	
		DOOR	INTERIOR PANEL

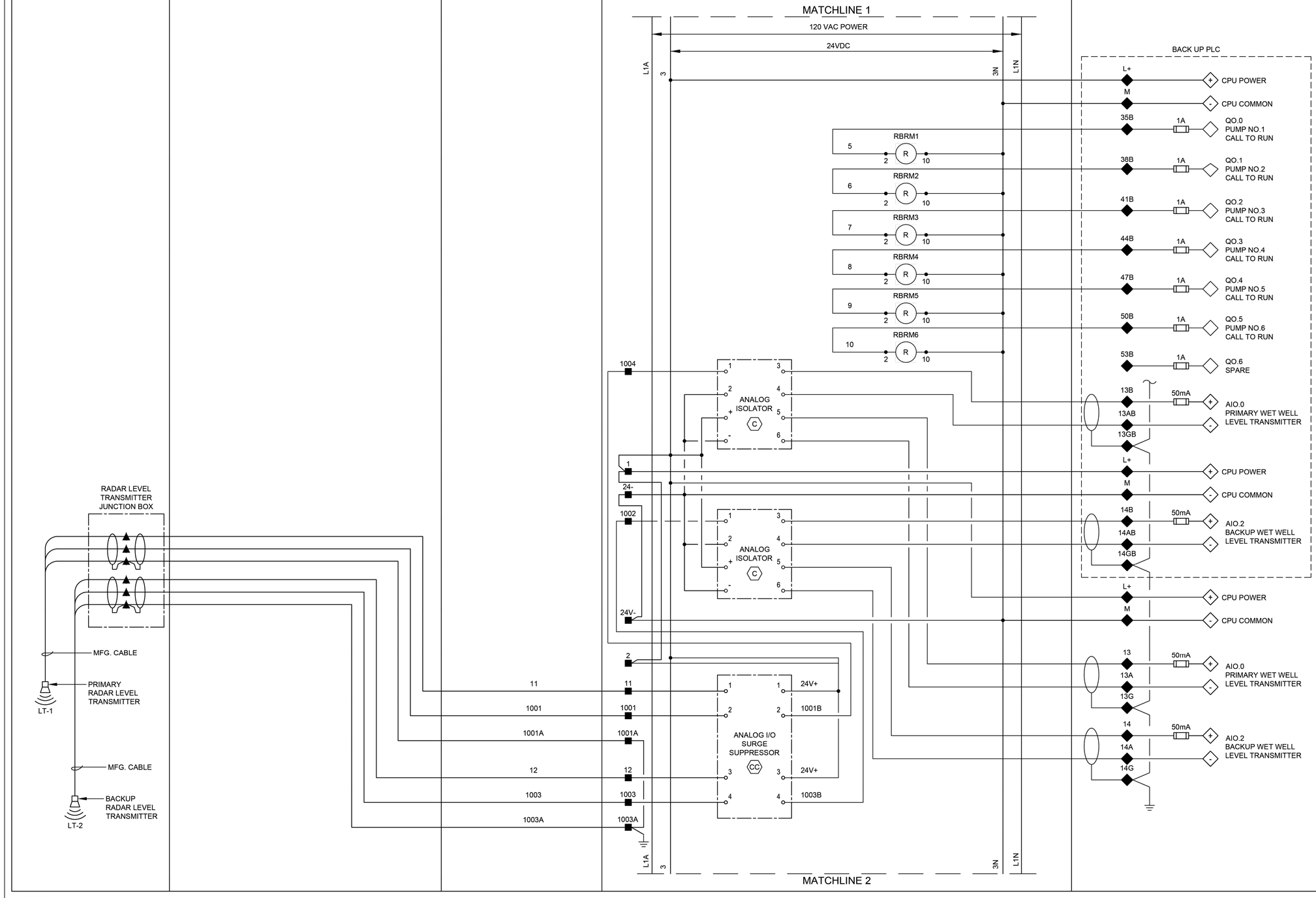

LEGEND

- △ DEVICE OR FIELD TERMINAL LOCATED AT MOTOR
- ✳ DEVICE OR FIELD TERMINAL LOCATED REMOTE
- □ DEVICE OR FIELD TERMINAL LOCATED AT MCC/POWER PANEL
- ■ FIELD TERMINAL LOCATED AT CONTROL PANEL
- ▲ REMOTE TERMINAL
- ● DEVICE TERMINAL NO.
- ◆ PLC INTERFACE TERMINAL

GENERAL NOTES:

1. NO ELECTRICAL MATERIAL, APPARATUS, DEVICES, APPLIANCES, FIXTURES, OR EQUIPMENT SHALL BE SOLD OR INSTALLED IN THE CITY UNLESS THEY ARE IN CONFORMANCE WITH THE PROVISIONS OF SECTION 508 CITY OF HOUSTON ELECTRICAL CODE, THE LAWS OF THE STATE OF TEXAS AND ANY APPLICABLE RULES AND REGULATIONS ISSUED UNDER THE AUTHORITY OF THE STATE STATUES. THE MAKER'S NAME, TRADEMARK, OR OTHER IDENTIFICATION SYMBOL SHALL BE PLACED ON ALL ELECTRICAL MATERIALS, APPARATUS, DEVICES, APPLIANCES, FIXTURES, AND EQUIPMENT USED OR INSTALLED UNDER THE PROVISIONS OF THIS CODE. ALL ELECTRICAL MATERIALS AND EQUIPMENT SHALL BE LISTED AND LABELED FOR THE INTENDED USE AND SHALL BE INCLUDED IN A LIST PUBLISHED BY AN APPROVAL AGENCY.

NO.	DATE	REVISION	APP.

FOR INTERIM REVIEW
ONLY NOT INTENDED FOR
PERMIT, BIDDING OR
CONSTRUCTION PURPOSES.
ENGINEER:
HOSS FOROUZAN
P.E. SERIAL NO.77748
05/18/2026

GAI
Gupta & Associates, Inc.
CONSULTING ENGINEERING
Registration No. F-2593
302 Dennis St.,
Houston, Texas 77006
Tel: 713-636-2936
Fax: 713-636-2987
email: hforouzan@gaiconsulting.com

IDS Engineering Group
13430 NW. Freeway
Suite 700
Houston, Tx. 77040
713.462.3178
TxEng Firm 2726
TxSurv Firm 10110700

CITY OF HOUSTON
HOUSTON PUBLIC WORKS

LIFT STATION RENEWAL AND REPLACEMENT FY 2023

LOCKWOOD LIFT STATION CONTROL PANEL CONTROL WIRING DIAGRAM—II

WBS NUMBER	FOR CITY OF HOUSTON USE ONLY
R-000267-0179-4	
DRAWING SCALE	
HORIZ: NONE VERT: NONE	
CITY OF HOUSTON PM	
NAWARAJ PANTA, P.E.	
DWG. NO. LCK-I-09	SHEET NO. 69 OF 361

IDS JOB No. 0057-085-00

PLOTTED: 5/12/2026 8:55 PM

FILE PATH: O:\H8108_Lift Station Rehabilitation And Reconstruction (IDS)\6 Drawings\Instrumentation And Control\Working\Lockwood\H8108_LCK-I-10.dwg

FIELD | MOTOR CONTROL CENTER | CONTROL PANEL: DOOR | CONTROL PANEL: INTERIOR PANEL | PLC

MATCHLINE 2

120 VAC POWER

24VDC

L1A | 24+ | 24- | L1N

M1 M2 M3 M4 M5 9

10

19

20

RFLP: R 2 10

1M — DI COMMON

2M — AI COMMON

1L — DO POWER

3 — DO POWER

L1

N

MS

MOTION SWITCH

30 — 1A — Q0.0 SPARE

32 — 50mA — I0.0 PLC INTRUSION ALARM

L1

N

MS

MOTION SWITCH

34

34

RUV: R 2 10

34 — 50mA — I0.1 PHASE FAILURE UNDER VOLTAGE

37 — 50mA — I0.3 SPARE

38 — 50mA — Q0.1 PLC MODE ACTIVE

RPLC1: R 2 10

RPLC2: R 2 10

RPLC3: R 2 10

YI-1 G PRIMARY PLC

41 — 50mA — I0.2 SPARE

BACK UP PLC

33B — 50mA — Q0.6 SPARE

ØA ØB ØC

JE-100D PHASE MONITOR

7 8 9 10 11 12

N/C

RPLC3: 6 5

YI-2 G BACKUP PLC

YI-2 BUILDING EXTERIOR ALARM LIGHT R

45 — 50mA — Q0.2 HIGH LEVEL ALARM

BACK UP PLC

18B — 50mA — I0.0 PHASE FAILURE UNDER VOLTAGE

RUV: 11 9

L1A | 24+ | 24- | L1N

MATCHLINE 3

LEGEND

- △ DEVICE OR FIELD TERMINAL LOCATED AT MOTOR
- ✳ DEVICE OR FIELD TERMINAL LOCATED REMOTE
- □ DEVICE OR FIELD TERMINAL LOCATED AT MCC/POWER PANEL
- ■ FIELD TERMINAL LOCATED AT CONTROL PANEL
- ▲ REMOTE TERMINAL
- ● DEVICE TERMINAL NO.
- ◆ PLC INTERFACE TERMINAL

GENERAL NOTES:

1. NO ELECTRICAL MATERIAL, APPARATUS, DEVICES, APPLIANCES, FIXTURES, OR EQUIPMENT SHALL BE SOLD OR INSTALLED IN THE CITY UNLESS THEY ARE IN CONFORMANCE WITH THE PROVISIONS OF SECTION 508 CITY OF HOUSTON ELECTRICAL CODE, THE LAWS OF THE STATE OF TEXAS AND ANY APPLICABLE RULES AND REGULATIONS ISSUED UNDER THE AUTHORITY OF THE STATE STATUES. THE MAKER'S NAME, TRADEMARK, OR OTHER IDENTIFICATION SYMBOL SHALL BE PLACED ON ALL ELECTRICAL MATERIALS, APPARATUS, DEVICES, APPLIANCES, FIXTURES, AND EQUIPMENT USED OR INSTALLED UNDER THE PROVISIONS OF THIS CODE. ALL ELECTRICAL MATERIALS AND EQUIPMENT SHALL BE LISTED AND LABELED FOR THE INTENDED USE AND SHALL BE INCLUDED IN A LIST PUBLISHED BY AN APPROVAL AGENCY.

NO.	DATE	REVISION	APP.

FOR INTERIM REVIEW
ONLY NOT INTENDED FOR
PERMIT, BIDDING OR
CONSTRUCTION PURPOSES.
ENGINEER:
HOSS FOROUZAN
P.E. SERIAL NO.77748
05/18/2026

GAI
Gupta & Associates, Inc.
CONSULTING ENGINEERING
Registration No. F-2593
302 Dennis St.,
Houston, Texas 77006
Tel: 713-636-2936
Fax: 713-636-2987
email: hforouzan@gaiconsulting.com

IDS Engineering Group
13430 NW. Freeway
Suite 700
Houston, Tx. 77040
713.462.3178
TxEng Firm 2726
TxSurv Firm 10110700

CITY OF HOUSTON
HOUSTON PUBLIC WORKS

LIFT STATION RENEWAL
AND REPLACEMENT FY 2023

LOCKWOOD LIFT STATION
CONTROL PANEL
CONTROL WIRING DIAGRAM—III

WBS NUMBER	FOR CITY OF HOUSTON USE ONLY
R-000267-0179-4	
DRAWING SCALE	
HORIZ: NONE VERT: NONE	
CITY OF HOUSTON PM	
NAWARAJ PANTA, P.E.	
SHEET NO. 70 OF 361	

DWG. NO. LCK-I-10

IDS JOB No. 0057-085-00

PLOTTED: 5/12/2026 8:55 PM

FILE PATH: O:\H8108_Lift Station Rehabilitation And Reconstruction (IDS)\6 Drawings\Instrumentation And Control\Working\Lockwood\H8108_LCK-I-11.dwg

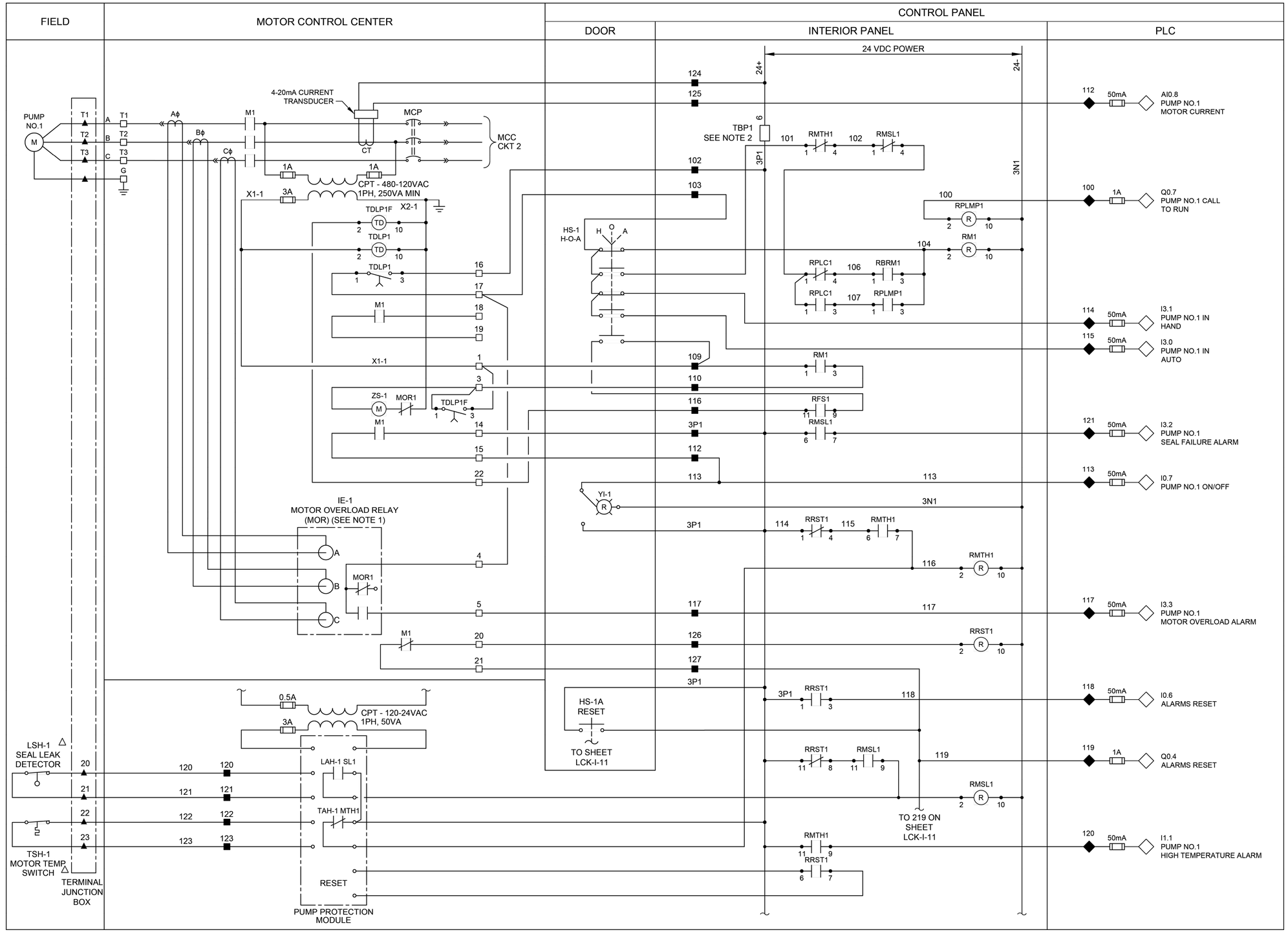

LEGEND

- △ DEVICE OR FIELD TERMINAL LOCATED AT MOTOR
- ✳ DEVICE OR FIELD TERMINAL LOCATED REMOTE
- □ DEVICE OR FIELD TERMINAL LOCATED AT MCC/POWER PANEL
- ■ FIELD TERMINAL LOCATED AT CONTROL PANEL
- ▲ REMOTE TERMINAL
- ● DEVICE TERMINAL NO.
- ◆ PLC INTERFACE TERMINAL

NOTES:

1. MOTOR OVERLOAD RELAY OUTPUT CONTACT SHOWN NORMALLY CLOSED WHEN RELAY IS DE-ENERGIZED, OPEN WHEN ENERGIZED, AND CLOSED WHEN IN ALARM. VERIFY OPERATION OF RELAY PROVIDED AND ADJUST CONNECTION OF RMOR AUXILIARY RELAYS.
2. FUSED TERMINAL ON TERMINAL BLOCK TB4 SEE CONTROL POWER AND COMMUNICATION WIRING DIAGRAM DRAWING NO. LCK-I-4.
3. ALL FLOAT CONTROL CIRCUIT WIRES COLOR SHALL BE YELLOW.

GENERAL NOTES:

1. NO ELECTRICAL MATERIAL, APPARATUS, DEVICES, APPLIANCES, FIXTURES, OR EQUIPMENT SHALL BE SOLD OR INSTALLED IN THE CITY UNLESS THEY ARE IN CONFORMANCE WITH THE PROVISIONS OF SECTION 508 CITY OF HOUSTON ELECTRICAL CODE, THE LAWS OF THE STATE OF TEXAS AND ANY APPLICABLE RULES AND REGULATIONS ISSUED UNDER THE AUTHORITY OF THE STATE STATUES. THE MAKER'S NAME, TRADEMARK, OR OTHER IDENTIFICATION SYMBOL SHALL BE PLACED ON ALL ELECTRICAL MATERIALS, APPARATUS, DEVICES, APPLIANCES, FIXTURES, AND EQUIPMENT USED OR INSTALLED UNDER THE PROVISIONS OF THIS CODE. ALL ELECTRICAL MATERIALS AND EQUIPMENT SHALL BE LISTED AND LABELED FOR THE INTENDED USE AND SHALL BE INCLUDED IN A LIST PUBLISHED BY AN APPROVAL AGENCY.

NO.	DATE	REVISION	APP.

FOR INTERIM REVIEW ONLY NOT INTENDED FOR PERMIT, BIDDING OR CONSTRUCTION PURPOSES.
ENGINEER:
HOSS FOROUZAN
P.E. SERIAL NO.77748
05/18/2026

GAI
Gupta & Associates, Inc.
CONSULTING ENGINEERING
Registration No. F-2593
302 Dennis St.,
Houston, Texas 77006
Tel: 713-636-2936
Fax: 713-636-2987
email: hforouzan@gaiconsulting.com

IDS Engineering Group
13430 NW. Freeway
Suite 700
Houston, Tx. 77040
713.462.3178
TxEng Firm 2726
TxSurv Firm 10110700

CITY OF HOUSTON
HOUSTON PUBLIC WORKS

LIFT STATION RENEWAL AND REPLACEMENT FY 2023

LOCKWOOD LIFT STATION PUMP NO.1 CONTROL WIRING DIAGRAM

WBS NUMBER	FOR CITY OF HOUSTON USE ONLY
R-000267-0179-4	
DRAWING SCALE	
HORIZ: NONE VERT: NONE	
CITY OF HOUSTON PM	
NAWARAJ PANTA, P.E.	
SHEET NO. 71 OF 361	

DWG. NO. LCK-I-11

IDS JOB No. 0057-085-00

PLOTTED: 5/12/2026 8:55 PM

FILE PATH: O:\H8108_Lift Station Rehabilitation And Reconstruction (IDS)\6 Drawings\Instrumentation And Control\Working\Lockwood\H8108_LCK-I-12.dwg

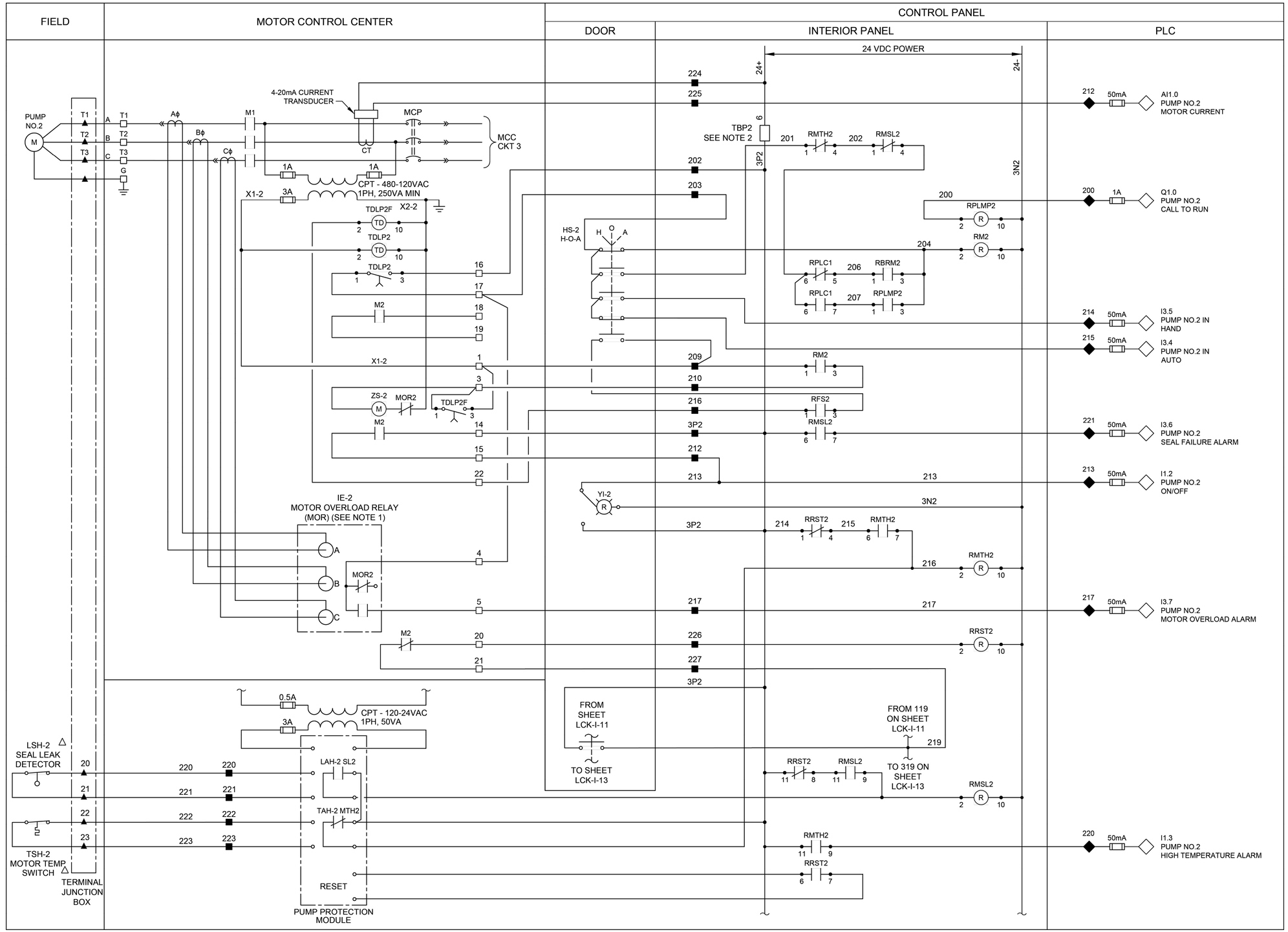

LEGEND

- △ DEVICE OR FIELD TERMINAL LOCATED AT MOTOR
- ✳ DEVICE OR FIELD TERMINAL LOCATED REMOTE
- □ DEVICE OR FIELD TERMINAL LOCATED AT MCC/POWER PANEL
- ■ FIELD TERMINAL LOCATED AT CONTROL PANEL
- ▲ REMOTE TERMINAL
- ● DEVICE TERMINAL NO.
- ◆ PLC INTERFACE TERMINAL

NOTES:

1. MOTOR OVERLOAD RELAY OUTPUT CONTACT SHOWN NORMALLY CLOSED WHEN RELAY IS DE-ENERGIZED, OPEN WHEN ENERGIZED, AND CLOSED WHEN IN ALARM. VERIFY OPERATION OF RELAY PROVIDED AND ADJUST CONNECTION OF RMOR AUXILIARY RELAYS.
2. FUSED TERMINAL ON TERMINAL BLOCK TB4 SEE CONTROL POWER AND COMMUNICATION WIRING DIAGRAM DRAWING NO. LCK-I-4.
3. ALL FLOAT CONTROL CIRCUIT WIRES COLOR SHALL BE YELLOW.

GENERAL NOTES:

1. NO ELECTRICAL MATERIAL, APPARATUS, DEVICES, APPLIANCES, FIXTURES, OR EQUIPMENT SHALL BE SOLD OR INSTALLED IN THE CITY UNLESS THEY ARE IN CONFORMANCE WITH THE PROVISIONS OF SECTION 508 CITY OF HOUSTON ELECTRICAL CODE, THE LAWS OF THE STATE OF TEXAS AND ANY APPLICABLE RULES AND REGULATIONS ISSUED UNDER THE AUTHORITY OF THE STATE STATUES. THE MAKER'S NAME, TRADEMARK, OR OTHER IDENTIFICATION SYMBOL SHALL BE PLACED ON ALL ELECTRICAL MATERIALS, APPARATUS, DEVICES, APPLIANCES, FIXTURES, AND EQUIPMENT USED OR INSTALLED UNDER THE PROVISIONS OF THIS CODE. ALL ELECTRICAL MATERIALS AND EQUIPMENT SHALL BE LISTED AND LABELED FOR THE INTENDED USE AND SHALL BE INCLUDED IN A LIST PUBLISHED BY AN APPROVAL AGENCY.

NO.	DATE	REVISION	APP.

FOR INTERIM REVIEW ONLY NOT INTENDED FOR PERMIT, BIDDING OR CONSTRUCTION PURPOSES.
ENGINEER:
HOSS FOROUZAN
P.E. SERIAL NO.77748
05/18/2026

GAI
Gupta & Associates, Inc.
CONSULTING ENGINEERING
Registration No. F-2593
302 Dennis St.,
Houston, Texas 77006
Tel: 713-636-2936
Fax: 713-636-2987
email: hforouzan@gaiconsulting.com

IDS Engineering Group
13430 NW. Freeway
Suite 700
Houston, Tx. 77040
713.462.3178
TxEng Firm 2726
TxSurv Firm 10110700

CITY OF HOUSTON
HOUSTON PUBLIC WORKS

LIFT STATION RENEWAL AND REPLACEMENT FY 2023

LOCKWOOD LIFT STATION PUMP NO.2 CONTROL WIRING DIAGRAM

WBS NUMBER	FOR CITY OF HOUSTON USE ONLY
R-000267-0179-4	
DRAWING SCALE	
HORIZ: NONE VERT: NONE	
CITY OF HOUSTON PM	
NAWARAJ PANTA, P.E.	
SHEET NO. 72 OF 361	

DWG. NO. LCK-I-12

IDS JOB No. 0057-085-00

PLOTTED: 5/12/2026 8:55 PM

FILE PATH: O:\H8108_Lift Station Rehabilitation And Reconstruction (IDS)\6 Drawings\Instrumentation And Control\Working\Lockwood\H8108_LCK-I-13.dwg

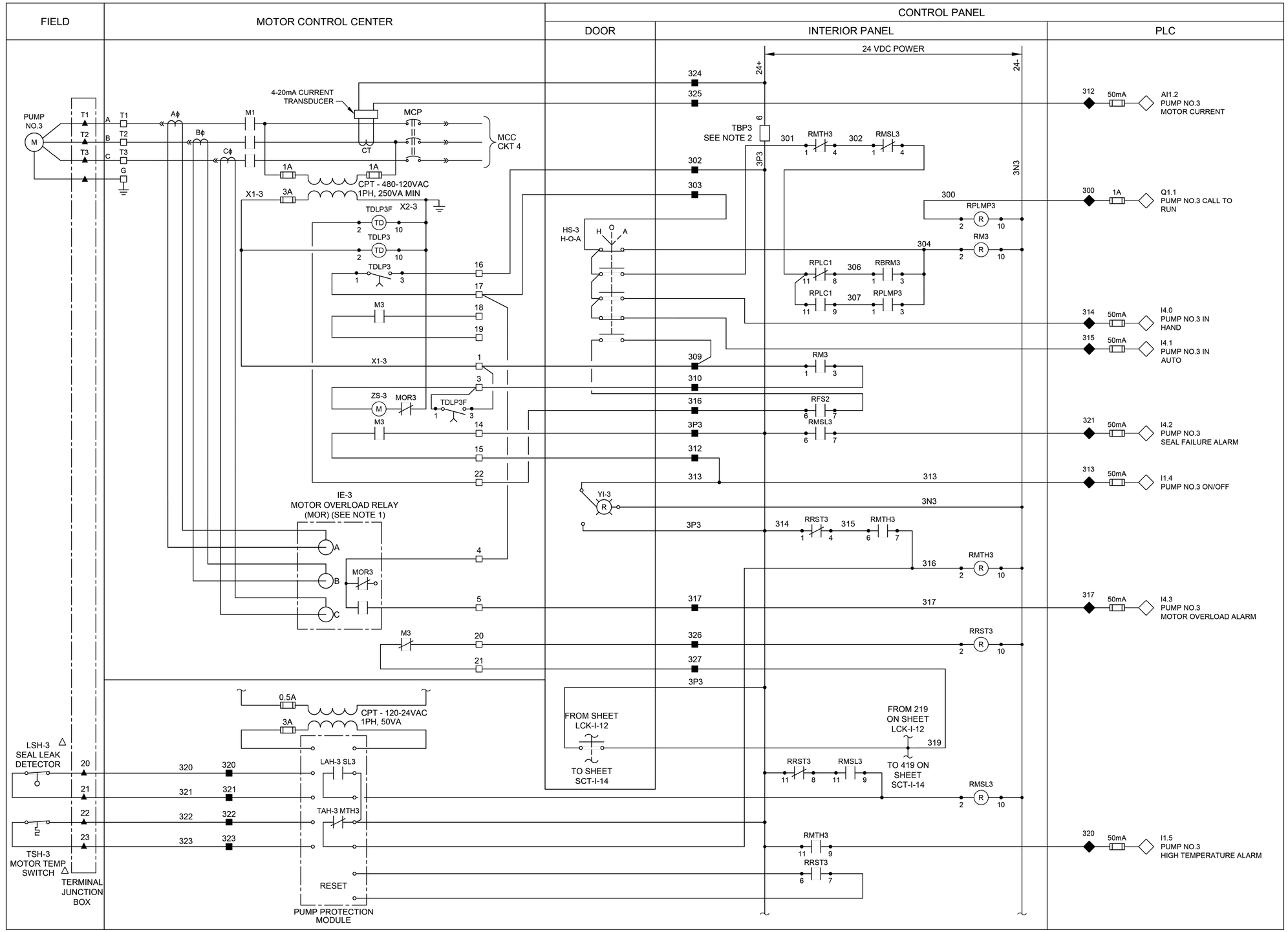

NOTES:

1. MOTOR OVERLOAD RELAY OUTPUT CONTACT SHOWN NORMALLY CLOSED WHEN RELAY IS DE-ENERGIZED, OPEN WHEN ENERGIZED, AND CLOSED WHEN IN ALARM. VERIFY OPERATION OF RELAY PROVIDED AND ADJUST CONNECTION OF RMOR AUXILIARY RELAYS.
2. FUSED TERMINAL ON TERMINAL BLOCK TB4 SEE CONTROL POWER AND COMMUNICATION WIRING DIAGRAM DRAWING NO. LCK-I-4.
3. ALL FLOAT CONTROL CIRCUIT WIRES COLOR SHALL BE YELLOW.

GENERAL NOTES:

1. NO ELECTRICAL MATERIAL, APPARATUS, DEVICES, APPLIANCES, FIXTURES, OR EQUIPMENT SHALL BE SOLD OR INSTALLED IN THE CITY UNLESS THEY ARE IN CONFORMANCE WITH THE PROVISIONS OF SECTION 508 CITY OF HOUSTON ELECTRICAL CODE, THE LAWS OF THE STATE OF TEXAS AND ANY APPLICABLE RULES AND REGULATIONS ISSUED UNDER THE AUTHORITY OF THE STATE STATUES. THE MAKER'S NAME, TRADEMARK, OR OTHER IDENTIFICATION SYMBOL SHALL BE PLACED ON ALL ELECTRICAL MATERIALS, APPARATUS, DEVICES, APPLIANCES, FIXTURES, AND EQUIPMENT USED OR INSTALLED UNDER THE PROVISIONS OF THIS CODE. ALL ELECTRICAL MATERIALS AND EQUIPMENT SHALL BE LISTED AND LABELED FOR THE INTENDED USE AND SHALL BE INCLUDED IN A LIST PUBLISHED BY AN APPROVAL AGENCY.

NO.	DATE	REVISION	APP.

FOR INTERIM REVIEW ONLY NOT INTENDED FOR PERMIT, BIDDING OR CONSTRUCTION PURPOSES.
ENGINEER:
HOSS FOROUZAN
P.E. SERIAL NO.77748
05/18/2026

GAI
Gupta & Associates, Inc.
CONSULTING ENGINEERING
Registration No. F-2593
302 Dennis St.,
Houston, Texas 77006
Tel: 713-636-2936
Fax: 713-636-2987
email: hforouzan@gaiconsulting.com

IDS Engineering Group
13430 NW. Freeway
Suite 700
Houston, Tx. 77040
713.462.3178
TxEng Firm 2726
TxSurv Firm 10110700

CITY OF HOUSTON
HOUSTON PUBLIC WORKS

LIFT STATION RENEWAL AND REPLACEMENT FY 2023

LOCKWOOD LIFT STATION PUMP NO.3 CONTROL WIRING DIAGRAM

WBS NUMBER	FOR CITY OF HOUSTON USE ONLY
R-000267-0179-4	
DRAWING SCALE	
HORIZ: NONE VERT: NONE	
CITY OF HOUSTON PM	
NAWARAJ PANTA, P.E.	
SHEET NO. 73 OF 361	

DWG. NO. LCK-I-13

IDS JOB No. 0057-085-00

PLOTTED: 5/12/2026 8:55 PM

FILE PATH: O:\H8108_Lift Station Rehabilitation And Reconstruction (IDS)\6 Drawings\Instrumentation And Control\Working\Lockwood\H8108_LCK-I-14.dwg

FIELD | MOTOR CONTROL CENTER | CONTROL PANEL (DOOR | INTERIOR PANEL | PLC)

PUMP NO.4
M
T1 T2 T3 G
A B C
4-20mA CURRENT TRANSDUCER
CT
MCP
MCC CKT 5
Aϕ Bϕ Cϕ
M1
1A 1A
CPT - 480-120VAC 1PH, 250VA MIN
X1-4 3A X2-4
TDLP4F TDLP4
M4
ZS-4 MOR4
IE-4 MOTOR OVERLOAD RELAY (MOR) (SEE NOTE 1)
A B C
MOR4
0.5A 3A
CPT - 120-24VAC 1PH, 50VA
LSH-4 SEAL LEAK DETECTOR
TSH-4 MOTOR TEMP SWITCH
TERMINAL JUNCTION BOX
LAH-4 SL4
TAH-4 MTH4
RESET
PUMP PROTECTION MODULE
HS-4 H-O-A
YI-4
FROM SHEET LCK-I-13
TO SHEET LCK-I-15
FROM 319 ON SHEET LCK-I-14
TO 519 ON SHEET LCK-I-15

24 VDC POWER
24+ 24-
TBP4 SEE NOTE 2
RMTH4 RMSL4 RPLMP4 RM4 RPLC2 RBRM4 RFS2 RFLP RRST4

412	50mA	AI1.4 PUMP NO.4 MOTOR CURRENT
400	1A	Q2.0 PUMP NO.4 CALL TO RUN
414	50mA	I4.5 PUMP NO.4 IN HAND
415	50mA	I4.4 PUMP NO.4 IN AUTO
421	50mA	I4.6 PUMP NO.4 SEAL FAILURE ALARM
413	50mA	I2.0 PUMP NO.4 ON/OFF
417	50mA	I4.7 PUMP NO.4 MOTOR OVERLOAD ALARM
420	50mA	I2.1 PUMP NO.4 HIGH TEMPERATURE ALARM

LEGEND

- △ DEVICE OR FIELD TERMINAL LOCATED AT MOTOR
- ✳ DEVICE OR FIELD TERMINAL LOCATED REMOTE
- □ DEVICE OR FIELD TERMINAL LOCATED AT MCC/POWER PANEL
- ■ FIELD TERMINAL LOCATED AT CONTROL PANEL
- ▲ REMOTE TERMINAL
- ● DEVICE TERMINAL NO.
- ◆ PLC INTERFACE TERMINAL

NOTES:

1. MOTOR OVERLOAD RELAY OUTPUT CONTACT SHOWN NORMALLY CLOSED WHEN RELAY IS DE-ENERGIZED, OPEN WHEN ENERGIZED, AND CLOSED WHEN IN ALARM. VERIFY OPERATION OF RELAY PROVIDED AND ADJUST CONNECTION OF RMOR AUXILIARY RELAYS.
2. FUSED TERMINAL ON TERMINAL BLOCK TB4 SEE CONTROL POWER AND COMMUNICATION WIRING DIAGRAM DRAWING NO. LCK-I-4.
3. ALL FLOAT CONTROL CIRCUIT WIRES COLOR SHALL BE YELLOW.

GENERAL NOTES:

1. NO ELECTRICAL MATERIAL, APPARATUS, DEVICES, APPLIANCES, FIXTURES, OR EQUIPMENT SHALL BE SOLD OR INSTALLED IN THE CITY UNLESS THEY ARE IN CONFORMANCE WITH THE PROVISIONS OF SECTION 508 CITY OF HOUSTON ELECTRICAL CODE, THE LAWS OF THE STATE OF TEXAS AND ANY APPLICABLE RULES AND REGULATIONS ISSUED UNDER THE AUTHORITY OF THE STATE STATUES. THE MAKER'S NAME, TRADEMARK, OR OTHER IDENTIFICATION SYMBOL SHALL BE PLACED ON ALL ELECTRICAL MATERIALS, APPARATUS, DEVICES, APPLIANCES, FIXTURES, AND EQUIPMENT USED OR INSTALLED UNDER THE PROVISIONS OF THIS CODE. ALL ELECTRICAL MATERIALS AND EQUIPMENT SHALL BE LISTED AND LABELED FOR THE INTENDED USE AND SHALL BE INCLUDED IN A LIST PUBLISHED BY AN APPROVAL AGENCY.

NO.	DATE	REVISION	APP.

FOR INTERIM REVIEW
ONLY NOT INTENDED FOR
PERMIT, BIDDING OR
CONSTRUCTION PURPOSES.
ENGINEER:
HOSS FOROUZAN
P.E. SERIAL NO.77748
05/18/2026

GAI
Gupta & Associates, Inc.
CONSULTING ENGINEERING
Registration No. F-2593
302 Dennis St.,
Houston, Texas 77006
Tel: 713-636-2936
Fax: 713-636-2987
email: hforouzan@gaiconsulting.com

IDS Engineering Group
13430 NW. Freeway
Suite 700
Houston, Tx. 77040
713.462.3178
TxEng Firm 2726
TxSurv Firm 10110700

CITY OF HOUSTON
HOUSTON PUBLIC WORKS

LIFT STATION RENEWAL AND REPLACEMENT FY 2023

LOCKWOOD LIFT STATION PUMP NO.4 CONTROL WIRING DIAGRAM

WBS NUMBER	FOR CITY OF HOUSTON USE ONLY
R-000267-0179-4	
DRAWING SCALE	
HORIZ: NONE VERT: NONE	
CITY OF HOUSTON PM	
NAWARAJ PANTA, P.E.	

DWG. NO.	SHEET NO.
LCK-I-14	74 OF 361

IDS JOB No. 0057-085-00

PLOTTED: 5/12/2026 8:55 PM

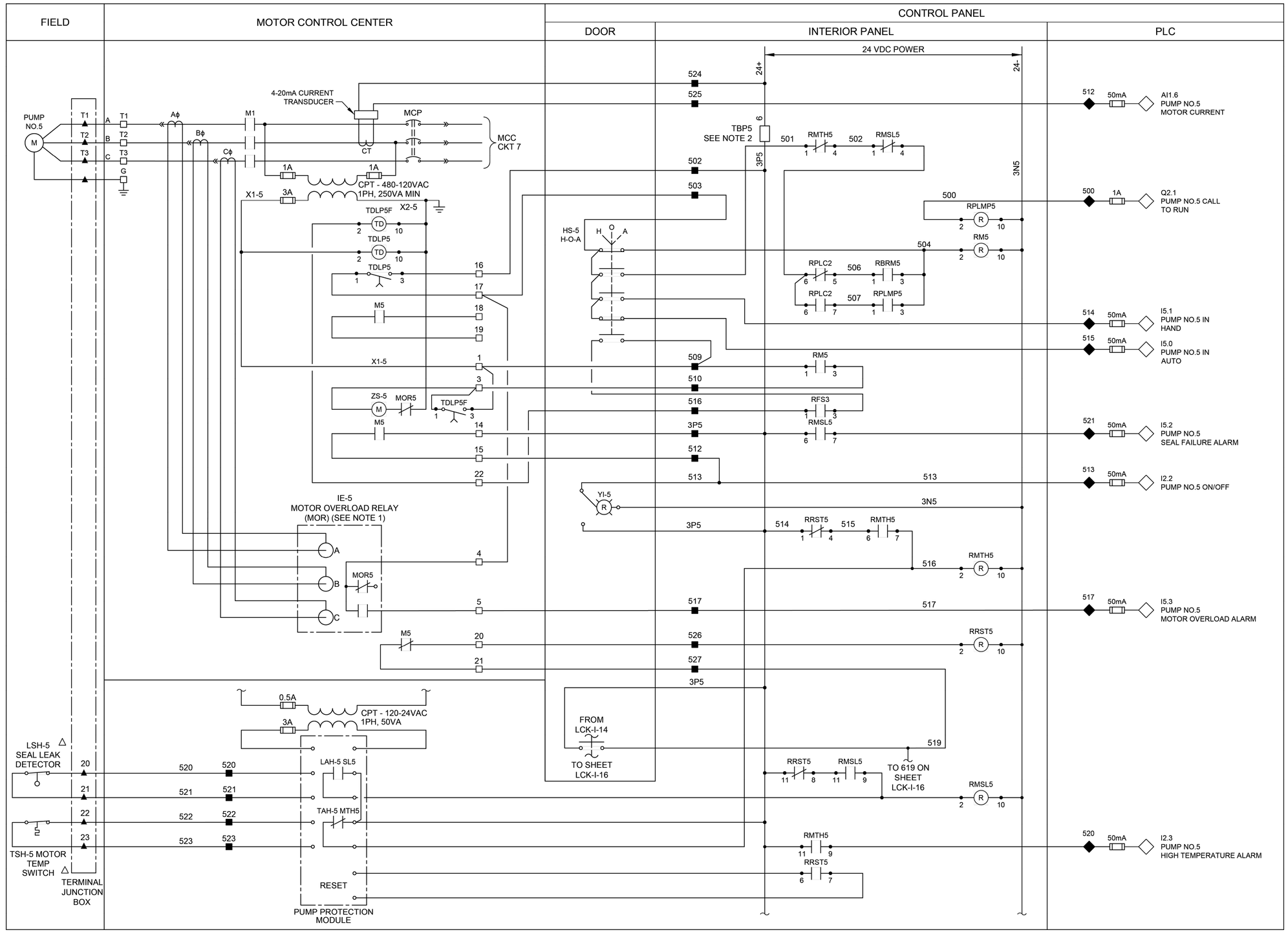

△ DEVICE OR FIELD TERMINAL LOCATED AT MOTOR

✳ DEVICE OR FIELD TERMINAL LOCATED REMOTE

□ DEVICE OR FIELD TERMINAL LOCATED AT MCC/POWER PANEL

■ FIELD TERMINAL LOCATED AT CONTROL PANEL

▲ REMOTE TERMINAL

● DEVICE TERMINAL NO.

◆ PLC INTERFACE TERMINAL

NOTES:

1. MOTOR OVERLOAD RELAY OUTPUT CONTACT SHOWN NORMALLY CLOSED WHEN RELAY IS DE-ENERGIZED, OPEN WHEN ENERGIZED, AND CLOSED WHEN IN ALARM. VERIFY OPERATION OF RELAY PROVIDED AND ADJUST CONNECTION OF RMOR AUXILIARY RELAYS.
2. FUSED TERMINAL ON TERMINAL BLOCK TB4 SEE CONTROL POWER AND COMMUNICATION WIRING DIAGRAM DRAWING NO. LCK-I-4.
3. ALL FLOAT CONTROL CIRCUIT WIRES COLOR SHALL BE YELLOW.

GENERAL NOTES:

1. NO ELECTRICAL MATERIAL, APPARATUS, DEVICES, APPLIANCES, FIXTURES, OR EQUIPMENT SHALL BE SOLD OR INSTALLED IN THE CITY UNLESS THEY ARE IN CONFORMANCE WITH THE PROVISIONS OF SECTION 508 CITY OF HOUSTON ELECTRICAL CODE, THE LAWS OF THE STATE OF TEXAS AND ANY APPLICABLE RULES AND REGULATIONS ISSUED UNDER THE AUTHORITY OF THE STATE STATUES. THE MAKER'S NAME, TRADEMARK, OR OTHER IDENTIFICATION SYMBOL SHALL BE PLACED ON ALL ELECTRICAL MATERIALS, APPARATUS, DEVICES, APPLIANCES, FIXTURES, AND EQUIPMENT USED OR INSTALLED UNDER THE PROVISIONS OF THIS CODE. ALL ELECTRICAL MATERIALS AND EQUIPMENT SHALL BE LISTED AND LABELED FOR THE INTENDED USE AND SHALL BE INCLUDED IN A LIST PUBLISHED BY AN APPROVAL AGENCY.

NO.	DATE	REVISION	APP.

FOR INTERIM REVIEW
ONLY NOT INTENDED FOR
PERMIT, BIDDING OR
CONSTRUCTION PURPOSES.
ENGINEER:
HOSS FOROUZAN
P.E. SERIAL NO.77748
05/18/2026

GAI
Gupta & Associates, Inc.
CONSULTING ENGINEERING
Registration No. F-2593
302 Dennis St.,
Houston, Texas 77006
Tel: 713-636-2936
Fax: 713-636-2987
email: hforouzan@gaiconsulting.com

IDS Engineering Group
13430 NW. Freeway
Suite 700
Houston, Tx. 77040
713.462.3178
TxEng Firm 2726
TxSurv Firm 10110700

CITY OF HOUSTON
HOUSTON PUBLIC WORKS

LIFT STATION RENEWAL AND REPLACEMENT FY 2023

LOCKWOOD LIFT STATION PUMP NO.5 CONTROL WIRING DIAGRAM

WBS NUMBER	FOR CITY OF HOUSTON USE ONLY
R-000267-0179-4	
DRAWING SCALE	
HORIZ: NONE VERT: NONE	
CITY OF HOUSTON PM	
NAWARAJ PANTA, P.E.	
SHEET NO. 75 OF 361	

DWG. NO. LCK-I-15

IDS JOB No. 0057-085-00

FILE PATH: O:\H8108_Lift Station Rehabilitation And Reconstruction (IDS)\6 Drawings\Instrumentation And Control\Working\Lockwood\H8108_LCK-I-15.dwg

PLOTTED: 5/12/2026 8:55 PM

FILE PATH: O:\HB108_Lift Station Rehabilitation And Reconstruction (IDS)\6 Drawings\Instrumentation And Control\Working\Lockwood\HB108_LCK-I-16.dwg

FIELD | MOTOR CONTROL CENTER | CONTROL PANEL (DOOR | INTERIOR PANEL | PLC)

PUMP NO.6
M
T1 T2 T3 G
A B C
4-20mA CURRENT TRANSDUCER
CT
MCP
MCC CKT 8
Aϕ Bϕ Cϕ
M1
1A 1A
CPT - 480-120VAC 1PH, 250VA MIN
X1-6 3A
X2-6
TDLP6F TDLP6
TDLP6
M6
ZS-6 MOR6
TDLP6F
M6
IE-6
MOTOR OVERLOAD RELAY (MOR) (SEE NOTE 1)
A B C MOR6
M6
0.5A 3A
CPT - 120-24VAC 1PH, 50VA
LSH-6 SEAL LEAK DETECTOR
TSH-6 MOTOR TEMP SWITCH
TERMINAL JUNCTION BOX
LAH-6 SL6
TAH-6 MTH6
RESET
PUMP PROTECTION MODULE

24 VDC POWER
24+ 24-
TBP6 SEE NOTE 2
HS-6 H-O-A
YI-6
FROM SHEET LCK-I-15
FROM 519 ON SHEET LCK-I-15
RMTH6 RMSL6 RPLMP6 RM6 RPLC2 RBRM6 RFS3 RRST6

612	50mA	AI1.8 PUMP NO.6 MOTOR CURRENT
600	1A	Q2.2 PUMP NO.6 CALL TO RUN
614	50mA	I5.5 PUMP NO.6 IN HAND
615	50mA	I5.4 PUMP NO.6 IN AUTO
621	50mA	I5.6 PUMP NO.6 SEAL FAILURE ALARM
613	50mA	I2.4 PUMP NO.6 ON/OFF
617	50mA	I5.7 PUMP NO.6 MOTOR OVERLOAD ALARM
620	50mA	I2.5 PUMP NO.6 HIGH TEMPERATURE ALARM

NOTES:

1. MOTOR OVERLOAD RELAY OUTPUT CONTACT SHOWN NORMALLY CLOSED WHEN RELAY IS DE-ENERGIZED, OPEN WHEN ENERGIZED, AND CLOSED WHEN IN ALARM. VERIFY OPERATION OF RELAY PROVIDED AND ADJUST CONNECTION OF RMOR AUXILIARY RELAYS.
2. FUSED TERMINAL ON TERMINAL BLOCK TB4 SEE CONTROL POWER AND COMMUNICATION WIRING DIAGRAM DRAWING NO. LCK-I-4.
3. ALL FLOAT CONTROL CIRCUIT WIRES COLOR SHALL BE YELLOW.

GENERAL NOTES:

1. NO ELECTRICAL MATERIAL, APPARATUS, DEVICES, APPLIANCES, FIXTURES, OR EQUIPMENT SHALL BE SOLD OR INSTALLED IN THE CITY UNLESS THEY ARE IN CONFORMANCE WITH THE PROVISIONS OF SECTION 508 CITY OF HOUSTON ELECTRICAL CODE, THE LAWS OF THE STATE OF TEXAS AND ANY APPLICABLE RULES AND REGULATIONS ISSUED UNDER THE AUTHORITY OF THE STATE STATUES. THE MAKER'S NAME, TRADEMARK, OR OTHER IDENTIFICATION SYMBOL SHALL BE PLACED ON ALL ELECTRICAL MATERIALS, APPARATUS, DEVICES, APPLIANCES, FIXTURES, AND EQUIPMENT USED OR INSTALLED UNDER THE PROVISIONS OF THIS CODE. ALL ELECTRICAL MATERIALS AND EQUIPMENT SHALL BE LISTED AND LABELED FOR THE INTENDED USE AND SHALL BE INCLUDED IN A LIST PUBLISHED BY AN APPROVAL AGENCY.

LEGEND

- △ DEVICE OR FIELD TERMINAL LOCATED AT MOTOR
- ✳ DEVICE OR FIELD TERMINAL LOCATED REMOTE
- □ DEVICE OR FIELD TERMINAL LOCATED AT MCC/POWER PANEL
- ■ FIELD TERMINAL LOCATED AT CONTROL PANEL
- ▲ REMOTE TERMINAL
- ● DEVICE TERMINAL NO.
- ◆ PLC INTERFACE TERMINAL

NO.	DATE	REVISION	APP.

FOR INTERIM REVIEW
ONLY NOT INTENDED FOR
PERMIT, BIDDING OR
CONSTRUCTION PURPOSES.
ENGINEER:
HOSS FOROUZAN
P.E. SERIAL NO.77748
05/18/2026

GAI
Gupta & Associates, Inc.
CONSULTING ENGINEERING
Registration No. F-2593
302 Dennis St.,
Houston, Texas 77006
Tel: 713-636-2936
Fax: 713-636-2987
email: hforouzan@gaiconsulting.com

IDS Engineering Group
13430 NW. Freeway
Suite 700
Houston, Tx. 77040
713.462.3178
TxEng Firm 2726
TxSurv Firm 10110700

CITY OF HOUSTON
HOUSTON PUBLIC WORKS

LIFT STATION RENEWAL AND REPLACEMENT FY 2023

LOCKWOOD LIFT STATION PUMP NO.6 CONTROL WIRING DIAGRAM

WBS NUMBER	FOR CITY OF HOUSTON USE ONLY
R-000267-0179-4	
DRAWING SCALE	
HORIZ: NONE VERT: NONE	
CITY OF HOUSTON PM	
NAWARAJ PANTA, P.E.	
DWG. NO. LCK-I-16	SHEET NO. 76 OF 361

IDS JOB No. 0057-085-00

PLOTTED: 5/13/2026 6:27 PM

LEGEND

- EXISTING CONCRETE PAVEMENT
- EXISTING CONCRETE SIDEWALK
- LIDAR CONTOUR DATED 2018

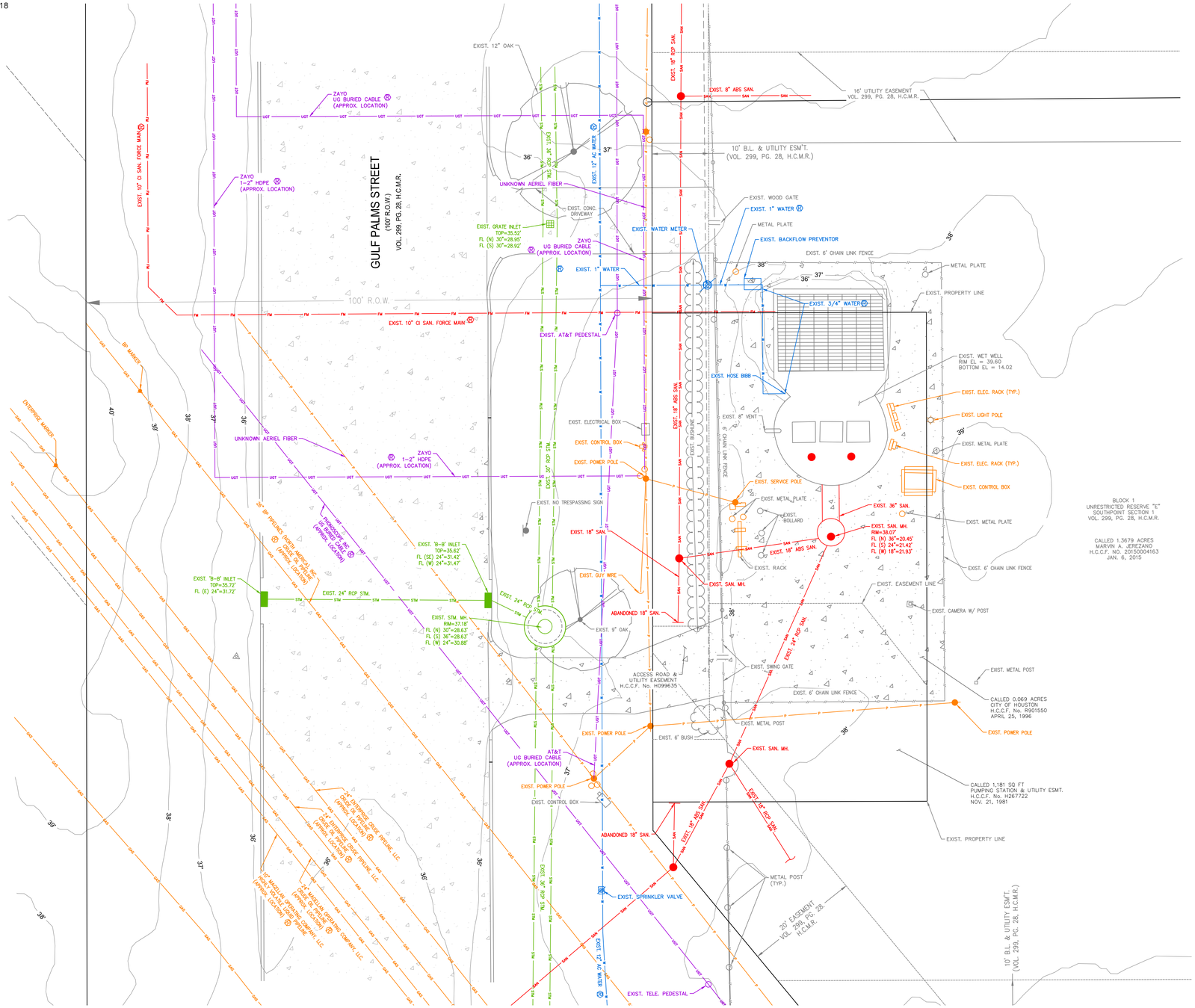

10' 0' 10'
SCALE
1" = 10'

N
W E
S

BENCHMARK:

CITY OF HOUSTON MONUMENT 5751-8613 IS AN ALUMINUM DISC ON TOP OF A CONCRETE INLET LOCATED ON THE NORTHWEST SIDE OF THE INTERSECTION OF GULF PALMS STREET AND SOUTH STREET.

ELEV. 37.22 FEET NAVD 1988, 2001 ADJUSTMENT (PROJECT DATUM)
ELEV. 35.78 FEET NAVD 1988, (GEOID 18')

FLOODPLAIN NOTE:

AS PER FIRM PANEL 48201C1055L DATED JUNE 18, 2007. THIS TRACT IS WITHIN THE UNSHADED ZONE X.
100-YR FLOODPLAIN ELEV. 32.50'
500-YR FLOODPLAIN ELEV. 33.40'
FIRM PANEL: 48201C1055L

T.B.M #25:

SET "X" CUT IN CONC. LOCATED ON THE WEST SIDE OF GULF PALMS STREET APPROX. 630 FT SOUTH FROM THE INTERSECTION OF FUQUA STREET
ELEV.= 36.67 FT.

EXISTING UTILITY NOTE:

EXISTING UNDERGROUND UTILITY INFORMATION (TYPE, SIZE & OWNERSHIP) ARE SHOWN APPROXIMATELY BASED ON THE AVAILABLE RECORD DRAWINGS AND FIELD VERIFICATION (WHERE FEASIBLE) WITHOUT PROBING AND EXCAVATION. NO WARRANTY IS MADE AS TO THE ACCURACY OR COMPLETENESS OF UTILITY LOCATION SHOWN ON THE DRAWING. CAUTION SHOULD BE EXERCISED WHEN EXCAVATING OR BORE AND JACKING IN THE VICINITY OF UNDERGROUND UTILITIES. OWNERS OF THE UTILITIES SHOULD BE NOTIFIED PRIOR TO SUCH ACTIVITIES. CALL UTILITY COORDINATING COMMITTEE AT 713-223-4567, AT LEAST 48 HOURS PRIOR TO EXCAVATING IN THE STREET RIGHT-OF-WAY.

NO.	DATE	REVISION	APP.

NOTICE:

FOR YOUR SAFETY, YOU ARE REQUIRED BY TEXAS LAW TO CALL 811 AT LEAST 48 HOURS BEFORE YOU DIG SO THAT UNDERGROUND LINES CAN BE MARKED. THIS SIGNATURE DOES NOT FULFILL YOUR OBLIGATION TO CALL 811

VERIFICATION OF PRIVATE UTILITY LINES

Date

CenterPoint Energy natural gas utilities shown. (Gas service lines are not shown). This signature not be used for conflict verification.

Signature valid for six months.

Date

CenterPoint Energy/UNDERGROUND Electrical Facilities Verification ONLY. (This signature verifies existing underground facilities – not to be used for conflict verification)

Signature valid for six months.

Date

Approved for AT&T underground conduit facilities only.
Signature valid for one year.

IDS Engineering Group
13430 NW. Freeway, Suite 700
Houston, Tx. 77040
713.462.3178
TxEng Firm 2726 | TxSurv Firm 10110700

SURVEYED BY: KUO & ASSOCIATES, INC.
TBPE FIRM #F-4578; TBPLS FIRM #1007560

THIS DOCUMENT IS RELEASED FOR THE PURPOSE OF REVIEW UNDER THE AUTHORITY OF MARCEL KHOUW, P.E. 101807 ON 05/27/2026. IT IS NOT TO BE USED FOR CONSTRUCTION PURPOSES.

CITY OF HOUSTON

HOUSTON PUBLIC WORKS

LIFT STATION RENEWAL AND REPLACEMENT FY 2023

SOUTH POINT LIFT STATION EXISTING SITE PLAN

WBS NUMBER	FOR CITY OF HOUSTON USE ONLY
R-000267-0179-4	
DRAWING SCALE	
HORIZ: 1" = 10' VERT: N/A	
CITY OF HOUSTON PM	
NAWARAJ PANTA, P.E.	
SHEET NO. 77 OF 361	

DWG. NO.
SPT-C-01

FILE PATH: \\idseg.com\FS\Projects\0000\005708500 CoH Lift Stations - FY 2023\CAD\DWG\PRODUCTION\77-SOUTH PNT OVERALL SITE PLAN.dwg

PLOTTED: 5/13/2026 6:27 PM

LEGEND

- EXISTING CONCRETE PAVEMENT
- REMOVE EXISTING CONCRETE PAVEMENT
- SITE DEMOLITION
- EXISTING CONCRETE SIDEWALK
- REMOVE EXISTING CONCRETE SIDEWALK
- LIFT STATION DEMOLITION
- ABANDON ANY UNDERGROUND UTILITY
- REMOVE ANY UNDERGROUND UTILITY
- REMOVE EXISTING FENCE
- FILTER FABRIC FENCE
- I.P.B.-II — INLET PROTECTION BARRIER
- CTW — CONCRETE TRUCK WASHOUT
  CONTRACTOR TOO PLACE CTW AS NECESSARY WITHIN COH PROPERTY OR EASEMENTS AS APPROVED BY PROJECT MANAGER

NOTES:

1. EXISTING LIFT STATION WET WELL TO REMAIN.
2. SEE ELECTRICAL PLANS ON DWG. NO.'S SPT–E–01 THROUGH SPT–I–14 FOR ELECTRICAL IMPROVEMENTS.
3. CONTRACTOR SHALL COORDINATE WITH CENTERPOINT ENERGY TO DE–ENERGIZE THE LIFT STATION AND OTHER ELECTRICAL EQUIPMENT ON SITE.
4. CONTRACTOR SHALL PROTECT THE EXISTING CONDUIT AND CABLE. IF CABLE OR CONDUIT IS DAMAGED CONTRACTOR SHALL REPLACE AT NO ADDITIONAL COST TO THE CITY.
5. REMOVE THE EXISTING FORCE MAIN TO THE NEAREST PIPE JOINT AND TIE PROPOSED FORCE MAIN TO EXISTING. USING RESTRAINED JOINTS.
6. THE EXISTING FORCE MAIN IS ASSUMED TO BE DUCTILE IRON BELL AND SPIGOT AND SHALL BE FIELD VERIFIED BY THE CONTRACTOR.
7. THE CITY OF HOUSTON WILL RETAIN SALVAGE RIGHTS TO ALL MATERIAL AND EQUIPMENT. ALL MATERIALS AND EQUIPMENT RETAINED BY THE CITY OF HOUSTON SHALL BE DELIVERED TO A POINT DESIGNATED BY CITY OF HOUSTON REPRESENTATIVE (MR. ARTURO CARRILLO 832–395–3558). ANY MATERIAL OR EQUIPMENT NOT RETAINED BY THE CITY OF HOUSTON SHALL BE REMOVED FROM THE SITE AND DISPOSED OF BY THE CONTRACTOR IN ACCORDANCE WITH APPLICABLE REGULATIONS.
8. THE SOUND PRODUCED BY THE ERECTION, EXCAVATION, CONSTRUCTION, OR DEMOLITION OF ANY BUILDING OR STRUCTURE, INCLUDING THE USE OF ANY NECESSARY TOOLS OR EQUIPMENT, CONDUCTED BETWEEN THE HOURS OF 7 A.M. AND 8 P.M., SHALL NOT PRODUCE A SOUND EXCEEDING 85 DB(A) WHEN MEASURED FROM THE PROPERTY LINE OF THE RESIDENTIAL PROPERTY WHERE THE SOUND IS BEING RECEIVED.
9. CONTRACTOR TO SAW–CUT, REMOVE, AND REPLACE CONCRETE AS NECESSARY. NO SEPARATE PAY.
10. FOR REQUIRED STORMWATER POLLUTION PREVENTION PLAN MEASURES ON PROPOSED INLETS SEE DRAINAGE PLAN.

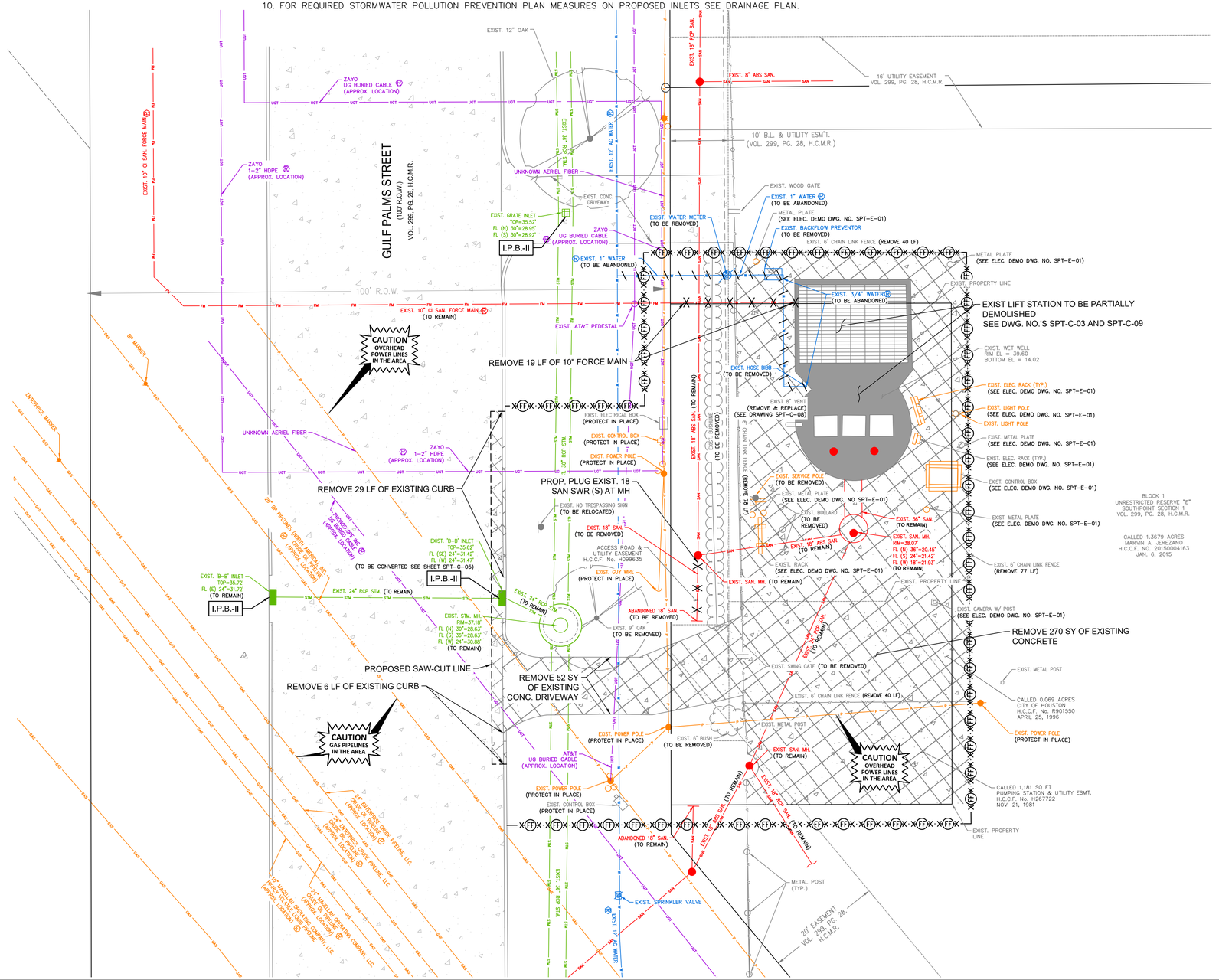

N
W E
S

10' 0' 10'
SCALE
1" = 10'

NO.	DATE	REVISION	APP.

BENCHMARK:

CITY OF HOUSTON MONUMENT 5751–8613 IS AN ALUMINUM DISC ON TOP OF A CONCRETE INLET LOCATED ON THE NORTHWEST SIDE OF THE INTERSECTION OF GULF PALMS STREET AND SOUTH STREET.

ELEV. 37.22 FEET NAVD 1988, 2001 ADJUSTMENT (PROJECT DATUM)
ELEV. 35.78 FEET NAVD 1988, (GEOID 18')

FLOODPLAIN NOTE:

AS PER FIRM PANEL 48201C1055L DATED JUNE 18, 2007. THIS TRACT IS WITHIN THE UNSHADED ZONE X.
100–YR FLOODPLAIN ELEV. 32.50'
500–YR FLOODPLAIN ELEV. 33.40'
FIRM PANEL: 48201C1055L

T.B.M #25:

SET "X" CUT IN CONC. LOCATED ON THE WEST SIDE OF GULF PALMS STREET APPROX. 630 FT SOUTH FROM THE INTERSECTION OF FUQUA STREET
ELEV.= 36.67 FT.

EXISTING UTILITY NOTE:

EXISTING UNDERGROUND UTILITY INFORMATION (TYPE, SIZE & OWNERSHIP) ARE SHOWN APPROXIMATELY BASED ON THE AVAILABLE RECORD DRAWINGS AND FIELD VERIFICATION (WHERE FEASIBLE) WITHOUT PROBING AND EXCAVATION. NO WARRANTY IS MADE AS TO THE ACCURACY OR COMPLETENESS OF UTILITY LOCATION SHOWN ON THE DRAWING. CAUTION SHOULD BE EXERCISED WHEN EXCAVATING OR BORE AND JACKING IN THE VICINITY OF UNDERGROUND UTILITIES. OWNERS OF THE UTILITIES SHOULD BE NOTIFIED PRIOR TO SUCH ACTIVITIES. CALL UTILITY COORDINATING COMMITTEE AT 713–223–4567, AT LEAST 48 HOURS PRIOR TO EXCAVATING IN THE STREET RIGHT–OF–WAY.

NOTICE:
FOR YOUR SAFETY, YOU ARE REQUIRED BY TEXAS LAW TO CALL 811 AT LEAST 48 HOURS BEFORE YOU DIG SO THAT UNDERGROUND LINES CAN BE MARKED. THIS SIGNATURE DOES NOT FULFILL YOUR OBLIGATION TO CALL 811

VERIFICATION OF PRIVATE UTILITY LINES

Date

CenterPoint Energy natural gas utilities shown. (Gas service lines are not shown). This signature not be used for conflict verification.

Signature valid for six months.

Date

CenterPoint Energy/UNDERGROUND Electrical Facilities Verification ONLY. (This signature verifies existing underground facilities – not to be used for conflict verification)

Signature valid for six months.

Date

Approved for AT&T underground conduit facilities only.
Signature valid for one year.

IDS Engineering Group
13430 NW. Freeway, Suite 700
Houston, Tx. 77040
713.462.3178
TxEng Firm 2726 | TxSurv Firm 10110700

THIS DOCUMENT IS RELEASED FOR THE PURPOSE OF REVIEW UNDER THE AUTHORITY OF MARCEL KHOUW, P.E. 101807 ON 05/27/2026. IT IS NOT TO BE USED FOR CONSTRUCTION PURPOSES.

SURVEYED BY: KUO & ASSOCIATES, INC.
TBPE FIRM #F–4578; TBPLS FIRM #1007560

CITY OF HOUSTON
HOUSTON PUBLIC WORKS

LIFT STATION RENEWAL AND REPLACEMENT FY 2023

SOUTH POINT LIFT STATION SITE DEMOLITION PLAN AND SWPPP

WBS NUMBER	FOR CITY OF HOUSTON USE ONLY
R–000267–0179–4	
DRAWING SCALE	
HORIZ: 1" = 10' VERT: N/A	
CITY OF HOUSTON PM	
NAWARAJ PANTA, P.E.	

DWG. NO. SPT–C–02

SHEET NO. 78 OF 361

FILE PATH: \\idseg.com\FS\Projects\0000\005708500 CoH Lift Stations – FY 2023\CAD\DWG\PRODUCTION\78–SOUTH PNT SITE PLAN AND DEMO.dwg

PLOTTED: 5/13/2026 6:27 PM

LIFT STATION DEMOLITION AND ABANDONMENT NOTES:

1. THIS DRAWING IS A REPRODUCTION OF THE EXISTING LIFT STATION CONSTRUCTION DRAWINGS AND INTENDED TO PROVIDE GENERAL INFORMATION FOR STATION DEMOLITION. THE CONTRACTOR IS RESPONSIBLE FOR DETERMINING THE ACTUAL WORK REQUIRED FOR DEMOLITION AND REMOVAL OF STRUCTURAL, MECHANICAL, AND ELECTRICAL COMPONENTS. A CLAIM FOR CHANGED CONDITIONS BETWEEN THE EXISTING CONDITIONS AND THE RECORD DRAWINGS WILL NOT BE CONSIDERED.
2. NO DEMOLITION IS TO BE PERFORMED UNTIL BYPASS PUMPING HAS BEEN INSTALLED AND OPERATIONAL.
3. THE CITY OF HOUSTON WILL RETAIN SALVAGE RIGHTS TO ALL MATERIAL AND EQUIPMENT. ALL MATERIALS AND EQUIPMENT RETAINED BY THE CITY OF HOUSTON SHALL BE DELIVERED TO A POINT DESIGNATED BY CITY OF HOUSTON REPRESENTATIVE (MR. ARTURO CARRILLO 832-395-3558). ANY MATERIAL OR EQUIPMENT NOT RETAINED BY THE CITY OF HOUSTON SHALL BE REMOVED FROM THE SITE AND DISPOSED OF BY THE CONTRACTOR IN ACCORDANCE WITH APPLICABLE REGULATIONS.
4. WHEN REMOVING EXISTING PUMPS, CONTRACTOR SHALL LEAVE AS MUCH WIRE/CABLE AS POSSIBLE IN ORDER FOR THE CITY FO HOUSTON TO REUSE THE PUMPS.
5. CONTRACTOR SHALL NOTIFY TEXAS DEPARTMENT OF HEALTH (DEPARTMENT) ON A FORM SPECIFIED BY THE DEPARTMENT OF ANY ASBESTOS ABATEMENT ACTIVITY, RENOVATION OR OPERATIONS AND MAINTENANCE ACTIVITY AFFECTING ASBESTOS-CONTAINING BUILDING MATERIALS, OR ANY DEMOLITION IN FACILITIES OR PUBLIC BUILDINGS.
6. CONCRETE SLAB AND WALLS INDICATED ON THIS PLAN SHALL BE REMOVED TO 5 FEET BELOW FINISHED GRADE AS PER SPECIFICATION SECTION 02220.
7. ALL REMAINING WALL OPENINGS IN THE VALVE VAULT SHALL BE SEALED WITH NON-SHRINK GROUT.
8. CONTRACTOR SHALL BACKFILL THE ABANDONED AND DEMOLISHED VALVE VAULT. BACKFILL SHALL BE SUITABLE FILL AND FLOWABLE FILL AS SHOWN AND COMPACTED PROPERLY UP TO THE PROPOSED CONCRETE DISCHARGE ASSEMBLY PAD.
9. THE CONTRACTOR SHALL COORDINATE WITH CENTERPOINT ENERGY TO TEMPORARILY DISCONNECT ELECTRICAL POWER AS NEEDED.
10. THE EXISTING WET WELL SHALL BE CLEANED OF ALL DEBRIS, WASTEWATER AND OTHER RESIDUES BY AN APPROVED CITY OF HOUSTON DISPOSAL CONTRACTOR.
11. THE CONTRACTOR SHALL DISPOSE OF ANY LIQUID OR SOLID WASTE FOUND IN THE WET WELL AT A DISPOSAL FACILITY LICENSED AND APPROVED BY THE STATE OF TEXAS. THE CONTRACTOR SHALL BE RESPONSIBLE FOR THE COST OF TRANSPORTATION, DISPOSAL AND TESTING REQUIRED BY STATE AND FEDERAL REGULATORY AGENCIES, AND BY THE DISPOSAL FACILITY.
12. PRIOR TO THE CLEAN-OUT AND CLEANING OF THE EXISTING LIFT STATION WET WELL, CONTRACTOR TO SUBMIT PROOF TO CITY OF HOUSTON CONSTRUCTION PM THAT TRANSPORTER/HAULER TO BE USED FOR THE TRANSPORT OF THE CONTENTS OF THE WET WELL (I.E., SOLIDS, GRIT, SEWAGE SLUDGE, AND DOMESTIC SLUDGE, ETC.) IS REGISTERED BY THE TEXAS COMMISSION ON ENVIRONMENTAL QUALITY (TCEQ) AS A SLUDGE TRANSPORTER AND THE TRANSPORTER'S REGISTRATION IS CURRENT AND VALID DURING THE PERIOD OF PERFORMANCE.
13. CONTRACTOR SHALL SUBMIT PROOF OF SUBMISSION OF REQUIRED ASBESTOS/DEMOLITION NOTIFICATION FORM TO THE TEXAS DEPARTMENT OF STATE HEALTH SERVICES TO CITY OF HOUSTON CONSTRUCTION PM. THE NOTIFICATION TO THE STATE MUST BE PROVIDED A MINIMUM OF 10 DAYS PRIOR TO THE STARTUP OF ANY DEMOLITION ACTIVITIES AT THE SITE.
14. CONTRACTOR SHALL OBTAIN CITY OF HOUSTON DEMOLITION PERMIT (SEE FORM CE 1075 REV. 01/01/2015 FOR GUIDELINES) OR SUBMIT PROOF OF NON-APPLICABILITY TO CITY OF HOUSTON CONSTRUCTION PROJECT MANAGER PRIOR TO THE STARTUP OF DEMOLITION ACTIVITIES AT THE SITE. THE CONTRACTOR SHALL OBTAIN ANY STATE DEMOLITION PERMITS REQUIRED.

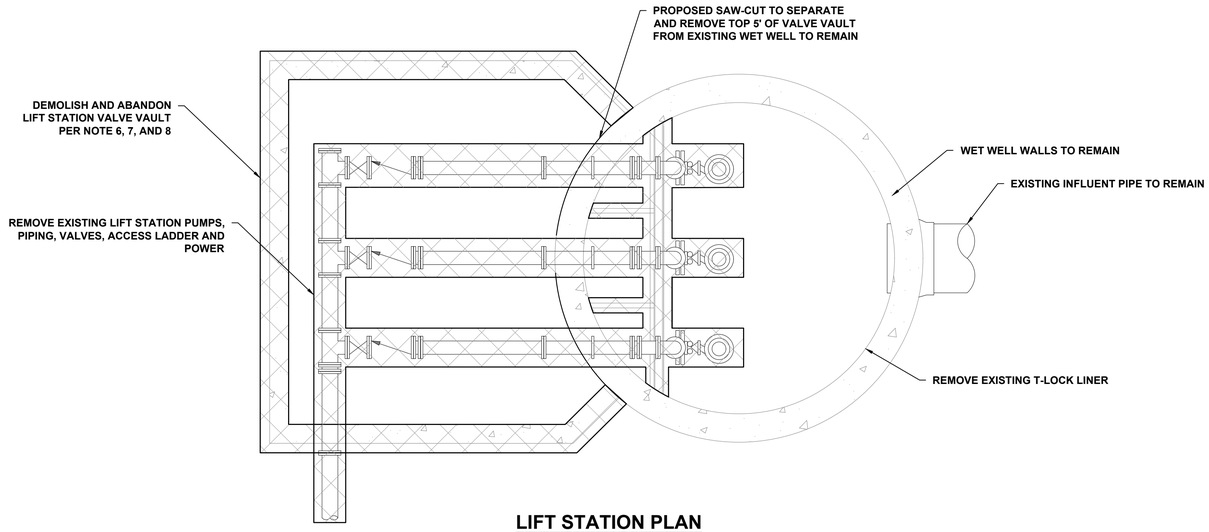

LIFT STATION PLAN

SCALE: 1" = 4'

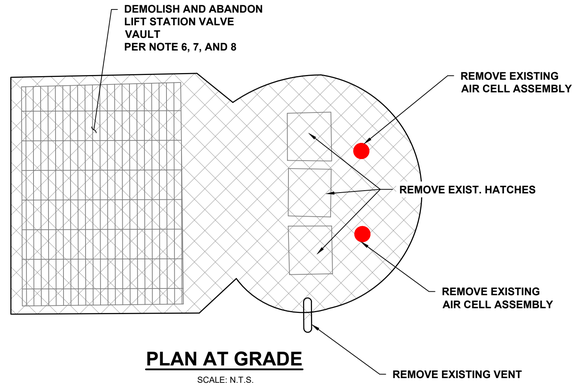

PLAN AT GRADE

SCALE: N.T.S.

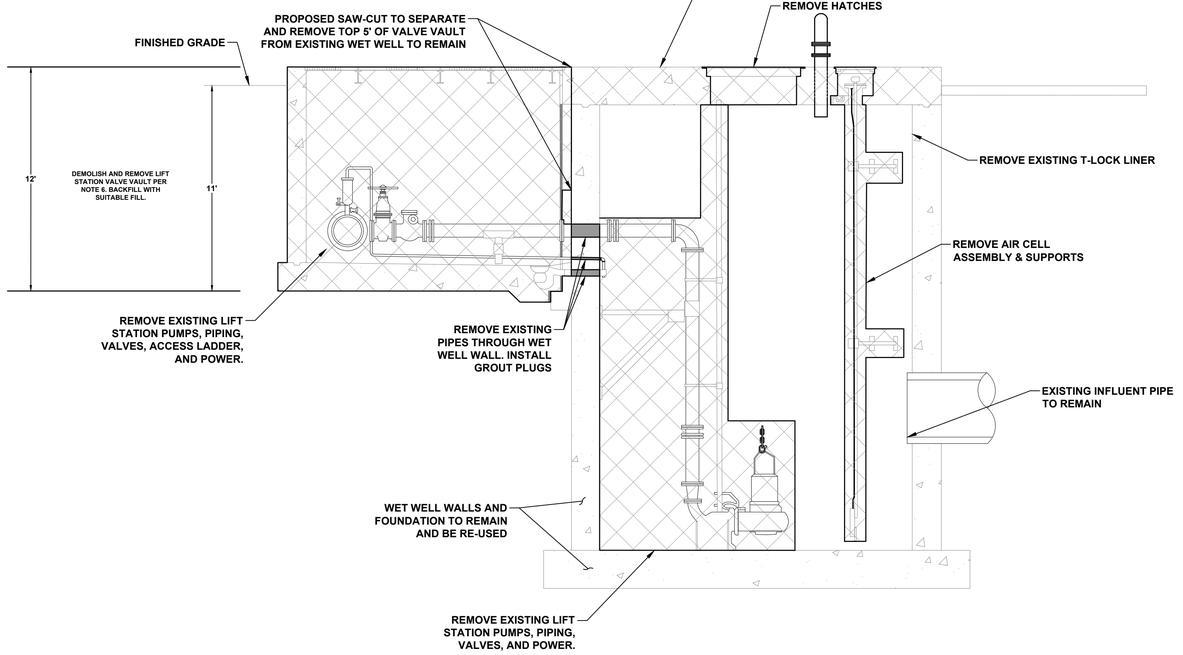

LIFT STATION SECTION

SCALE: 1" = 4'

LEGEND

DEMOLITION AREA

ABANDON VALVE VAULT

NO.	DATE	REVISION	APP.

IDS Engineering Group
13430 NW. Freeway, Suite 700
Houston, Tx. 77040
713.462.3178
TxEng Firm 2726 | TxSurv Firm 10110700

SURVEYED BY: KUO & ASSOCIATES, INC.
TBPE FIRM #F-4578; TBPLS FIRM #1007560

THIS DOCUMENT IS RELEASED FOR THE PURPOSE OF REVIEW UNDER THE AUTHORITY OF MARCEL KHOUW, P.E. 101807 ON 05/27/2026. IT IS NOT TO BE USED FOR CONSTRUCTION PURPOSES.

CITY OF HOUSTON
HOUSTON PUBLIC WORKS

LIFT STATION RENEWAL AND REPLACEMENT FY 2023

SOUTH POINT LIFT STATION SECTION DEMOLITION

WBS NUMBER	FOR CITY OF HOUSTON USE ONLY
R-000267-0179-4	
DRAWING SCALE	
HORIZ: AS NOTED VERT: N/A	
CITY OF HOUSTON PM	
NAWARAJ PANTA, P.E.	
SHEET NO. 79 OF 361	

DWG. NO. SPT-C-03

FILE PATH: \\tdseg.com\FS\Projects\0000\005708500 CoH Lift Stations - FY 2023\CAD\DWG\PRODUCTION\79-SOUTH PNT SECTION DEMO.dwg

PLOTTED: 5/13/2026 6:27 PM

FILE PATH: \\idseg.com\FS\Projects\0000\005708500 CoH Lift Stations - FY 2023\CAD\DWG\PRODUCTION\80-SOUTH PNT PROP SITE PLAN.dwg

NOTES:

1. EXISTING LIFT STATION WET WELL TO REMAIN.
2. SEE ELECTRICAL PLANS ON DRAWINGS SPT-E-01-SPT-I-14 FOR ELECTRICAL IMPROVEMENTS.
3. CONTRACTOR SHALL COORDINATE WITH CENTERPOINT ENERGY TO DE-ENERGIZE THE LIFT STATION AND OTHER ELECTRICAL EQUIPMENT ON SITE.
4. REMOVE EXISTING T-LOCK LINER, REPAIR MANHOLE WALL AND RESTORE BENCH PER SPEC 02555, REPLACE MANHOLE FRAME, RING, AND COVER, AND RECOAT WITH A COH APPROVED MATERIAL PER SPEC 09901.
5. DOWEL INTO EXISTING PAVEMENT. USE 24" x #4 SMOOTH DOWELS AT 18" CENTER TO CENTER, CENTERED ON SAWCUT.
6. SANITARY SEWER MANHOLES INSTALLED BELOW THE FLOODPLAIN ELEVATION SHALL HAVE WATERTIGHT MANHOLE FRAMES AND COVERS AS PER SPECIFICATION 02090.
7. CONTRACTOR SHALL FIELD VERIFY THE LOCATION OF THE HOLES DRILLED FOR THE RISER PIPE INSTALLATION THRU THE WET WELL TOP SLAB.
8. REMOVE THE EXISTING FORCE MAIN TO THE NEAREST PIPE JOINT AND TIE PROP FORCE MAIN TO EXIST. USE RESTRAINED JOINTS.
9. THE EXISTING FORCE MAIN IS ASSUMED TO BE DUCTILE IRON BELL AND SPIGOT AND SHALL BE FIELD VERIFIED BY THE CONTRACTOR.
10. CONTRACTOR TO PROTECT EXISTING CONDUIT AND CABLE. IF CABLE OR CONDUIT IS DAMAGED DURING CONSTRUCTION, CONTRACTOR SHALL REPLACE AT NO ADDITIONAL COST TO THE CITY.
11. YARD LIGHT POLES, ELECTRICAL & COMMUNICATION POLES, AND SERVICE POLES SHALL BE ABLE TO WITHSTAND ULTIMATE DESIGN WIND SPEED OF 130 MPH, V(ULT).
12. REMOVE EXISTING T-LOCK LINER, REPAIR MANHOLE WALL AND RESTORE BENCH PER SPEC 02555, REPLACE MANHOLE FRAME RING, AND COVER, AND RECOAT WITH A COH APPROVED MATERIAL PER SPEC 09901.
13. CONTRACTOR TO SAWCUT, REMOVE, AND REPLACE CONCRETE AS NECESSARY. NO SEPARATE PAY.
14. SIDEWALK THICKNESS SHALL BE 7" WHEN LOCATED WITHIN THE DRIVEWAY. SIDEWALK LOCATED OUTSIDE OF THE DRIVEWAY SHALL BE 4.5" THICK PER DETAIL ON C-07.

PROPOSED POINT TABLE

POINT	NORTHING	EASTING	DESCRIPTION	ELEVATION
1	13793669.99	3172531.22	PROP. 45° BEND	FL = +/- 28.00'
2	13793674.44	3172525.98	PROP. TIE-IN TO EXIST FORCE MAIN	FL = +/- 28.00'

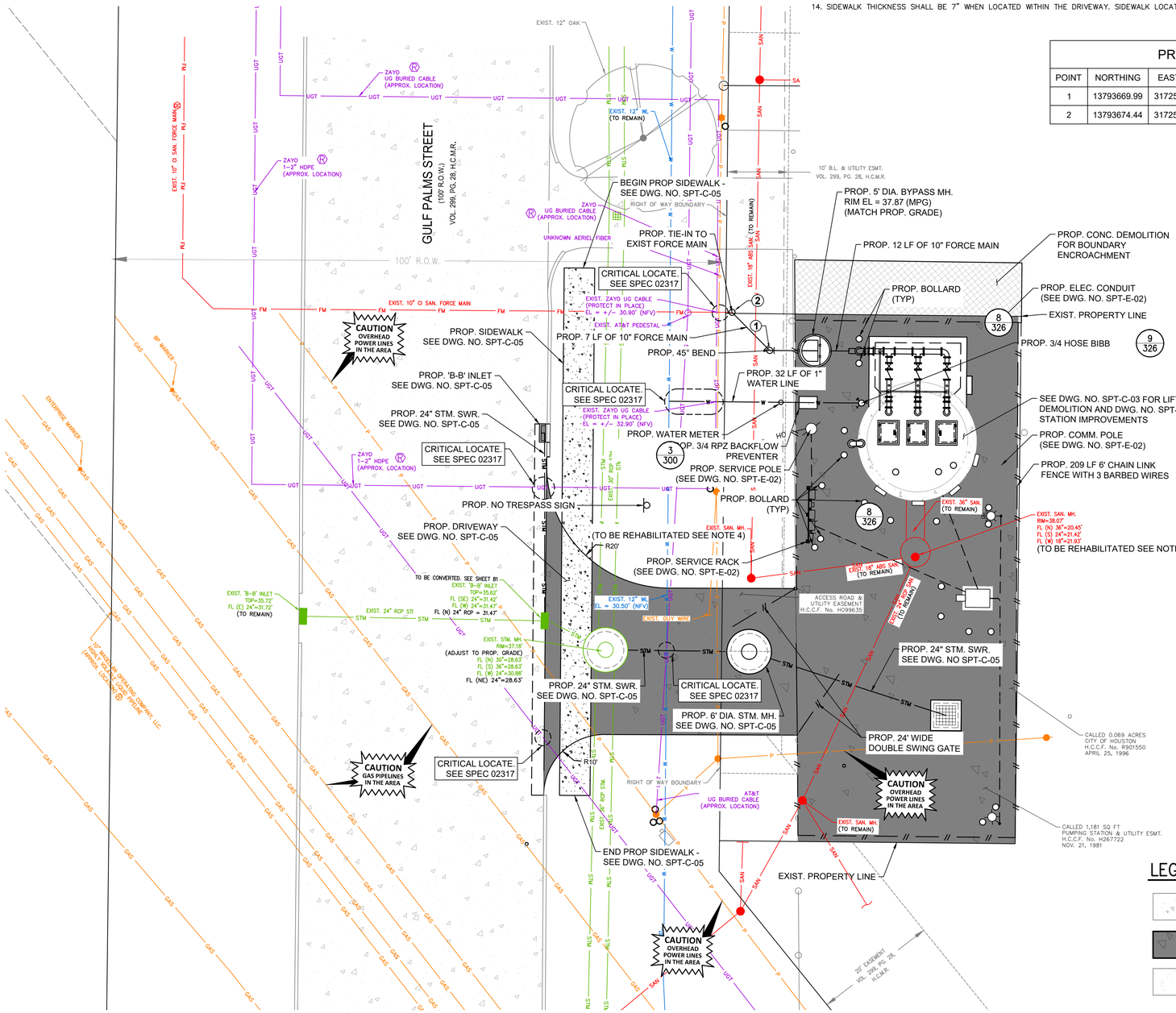

LEGEND

- EXISTING CONCRETE PAVEMENT
- PROP. 7" THICK CONCRETE PAVEMENT W/6" CEMENT STABILIZED SAND SUBGRADE
- EXISTING CONCRETE SIDEWALK
- PROP. CONCRETE SIDEWALK (SEE NOTE 14)
- DETAIL NO. / SHEET NO.

10' 0' 10'
SCALE
1"=10'

N W E S

BENCHMARK:

CITY OF HOUSTON MONUMENT 5751-8613 IS AN ALUMINUM DISC ON TOP OF A CONCRETE INLET LOCATED ON THE NORTHWEST SIDE OF THE INTERSECTION OF GULF PALMS STREET AND SOUTH STREET.

ELEV. 37.22 FEET NAVD 1988, 2001 ADJUSTMENT (PROJECT DATUM)
ELEV. 35.78 FEET NAVD 1988, (GEOID 18')

FLOODPLAIN NOTE:

AS PER FIRM PANEL 48201C1055L DATED JUNE 18, 2007. THIS TRACT IS WITHIN THE UNSHADED ZONE X.
100-YR FLOODPLAIN ELEV. 32.50'
500-YR FLOODPLAIN ELEV. 33.40'
FIRM PANEL: 48201C1055L

T.B.M #25:

SET "X" CUT IN CONC. LOCATED ON THE WEST SIDE OF GULF PALMS STREET APPROX. 630 FT SOUTH FROM THE INTERSECTION OF FUQUA STREET
ELEV.= 36.67 FT.

EXISTING UTILITY NOTE:

EXISTING UNDERGROUND UTILITY INFORMATION (TYPE, SIZE & OWNERSHIP) ARE SHOWN APPROXIMATELY BASED ON THE AVAILABLE RECORD DRAWINGS AND FIELD VERIFICATION (WHERE FEASIBLE) WITHOUT PROBING AND EXCAVATION. NO WARRANTY IS MADE AS TO THE ACCURACY OR COMPLETENESS OF UTILITY LOCATION SHOWN ON THE DRAWING. CAUTION SHOULD BE EXERCISED WHEN EXCAVATING OR BORE AND JACKING IN THE VICINITY OF UNDERGROUND UTILITIES. OWNERS OF THE UTILITIES SHOULD BE NOTIFIED PRIOR TO SUCH ACTIVITIES. CALL UTILITY COORDINATING COMMITTEE AT 713-223-4567, AT LEAST 48 HOURS PRIOR TO EXCAVATING IN THE STREET RIGHT-OF-WAY.

NO.	DATE	REVISION	APP.

NOTICE:
FOR YOUR SAFETY, YOU ARE REQUIRED BY TEXAS LAW TO CALL 811 AT LEAST 48 HOURS BEFORE YOU DIG SO THAT UNDERGROUND LINES CAN BE MARKED. THIS SIGNATURE DOES NOT FULFILL YOUR OBLIGATION TO CALL 811

VERIFICATION OF PRIVATE UTILITY LINES

Date

CenterPoint Energy natural gas utilities shown. (Gas service lines are not shown). This signature not be used for conflict verification.

Signature valid for six months.

Date

CenterPoint Energy/UNDERGROUND Electrical Facilities Verification ONLY. (This signature verifies existing underground facilities - not to be used for conflict verification)

Signature valid for six months.

Date

Approved for AT&T underground conduit facilities only.
Signature valid for one year.

IDS Engineering Group
13430 NW. Freeway, Suite 700
Houston, Tx. 77040
713.462.3178
TxEng Firm 2726 | TxSurv Firm 10110700

THIS DOCUMENT IS RELEASED FOR THE PURPOSE OF REVIEW UNDER THE AUTHORITY OF MARCEL KHOUW, P.E. 101807 ON 05/27/2026. IT IS NOT TO BE USED FOR CONSTRUCTION PURPOSES.

SURVEYED BY: KUO & ASSOCIATES, INC.
TBPE FIRM #F-4578; TBPLS FIRM #1007560

CITY OF HOUSTON
HOUSTON PUBLIC WORKS

LIFT STATION RENEWAL AND REPLACEMENT FY 2023

SOUTH POINT LIFT STATION PROPOSED SITE PLAN

WBS NUMBER	FOR CITY OF HOUSTON USE ONLY
R-000267-0179-4	
DRAWING SCALE	
HORIZ: 1" = 10' VERT: N/A	
CITY OF HOUSTON PM	
NAWARAJ PANTA, P.E.	

DWG. NO. SPT-C-04

SHEET NO. 80 OF 361

PLOTTED: 5/13/2026 6:27 PM

NOTES:

1. RESPONSIBILITY FOR MAINTENANCE OF THE DETENTION FACILITY WILL BE BY THE PROPERTY OWNER.
2. SUBSURFACE DRAINAGE SYSTEMS ARE REQUIRED TO BE DRAINED IN 48 HOURS.
3. OFFSITE FLOW IS UNAFFECTED BY THE PROPOSED LIFT STATION STRUCTURE AND CONCRETE PAVING.
4. DRAINAGE AREA EXTENDS BEYOND THE LIMITS OF THIS SHEET.
5. CONCRETE REPAIR IS SHOWN AS A MINIMUM. CONTRACTOR IS RESPONSIBLE FOR ADDITIONAL CONCRETE REPAIR REQUIRED FOR UTILITY INSTALLATION. NO SEPARATE PAY.
6. CONTRACTOR SHALL SUBMIT EXPANSION AND CONTROL JOINT PLAN FOR APPROVAL.
7. EXPANSION JOINTS SHALL BE INSTALLED AT ALL CURB RETURNS AND AT A MAXIMUM SPACING OF 60–FT INTERVALS. PLACE 3/4 " PREFORMED EXPANSION JOINTS THROUGH CURB AND GUTTERS AT LOCATIONS OF EXPANSIONS JOINTS IN PAVEMENT, AT END OF RADIUS RETURNS, AT STREET INTERSECTIONS AND DRIVEWAYS, AND AT CURB INLETS.
8. LONGITUDINAL CONSTRUCTION JOINTS SHALL BE SPACED AT A MAXIMUM OF 15–FT. DEFORMED METAL STRIP TO BE INSTALLED MAXIMUM 1/4 " BELOW FINISH TOP OF PAVEMENT.
9. CONTRACTOR TO SAW–CUT, REMOVE, AND REPLACE CONCRETE AS NECESSARY. NO SEPARATE PAY.
10. SIDEWALK THICKNESS SHALL BE 7" WHEN LOCATED WITHIN THE DRIVEWAY. SIDEWALK LOCATED OUTSIDE OF THE DRIVEWAY SHALL BE 4.5" THICK PER DETAIL ON C–07.

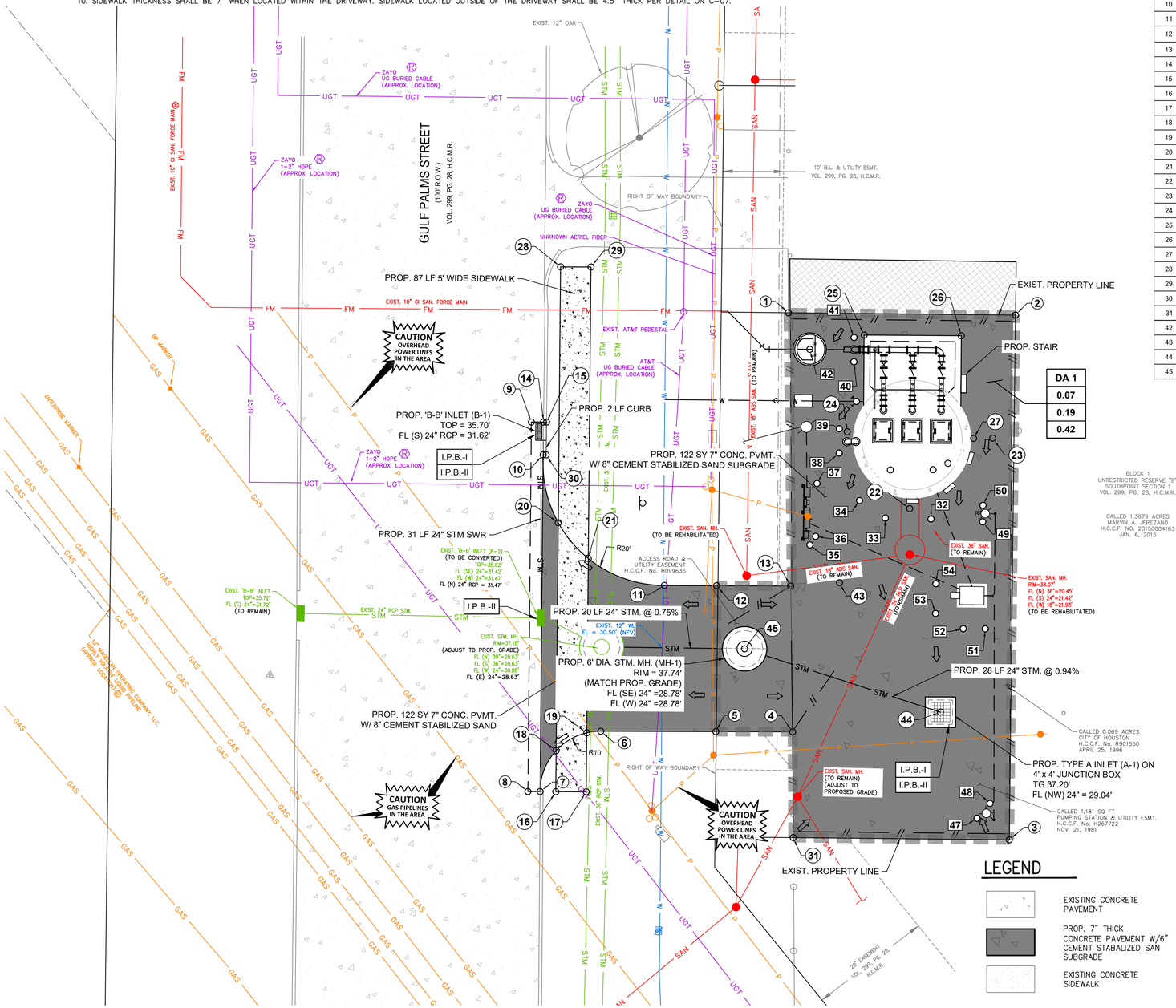

PROPOSED POINT TABLE

POINT	NORTHING	EASTING	DESCRIPTION	ELEVATION
1	13793675.05	3172535.96	PROP. SITE PAVING/MEG	+/- 37.87'
2	13793677.91	3172573.22	PROP. SITE PAVING/MEG	+/- 37.93'
3	13793591.79	3172579.71	PROP. SITE PAVING/MEG	+/- 38.19'
4	13793606.40	3172542.65	PROP. CONCRETE DRIVEWAY/MEG	+/- 37.72'
5	13793605.34	3172530.06	PROP. CONCRETE DRIVEWAY (GRADE BREAK)	37.75'
6	13793603.76	3172511.20	PROP. CONCRETE DRIVEWAY	36.24'
7	13793592.98	3172502.12	PROP. CONCRETE DRIVEWAY/MEG	+/- 35.32'
8	13793592.82	3172500.12	PROP. CONCRETE DRIVEWAY/MEG	+/- 35.37'
9	13793653.45	3172495.41	PROP. CONCRETE DRIVEWAY/MEG	+/- 35.27'
10	13793648.24	3172497.80	PROP. CONCRETE DRIVEWAY/MEG	+/- 35.19'
11	13793628.56	3172519.54	PROP. CONCRETE DRIVEWAY	37.25'
12	13793629.27	3172528.10	PROP. CONCRETE DRIVEWAY	37.75'
13	13793630.28	3172540.25	PROP. CONCRETE DRIVEWAY/MEG	+/- 37.71'
14	13793653.61	3172497.40	PROP. CONCRETE DRIVEWAY/MEG	+/- 35.20'
15	13793653.65	3172497.90	PROP. SITE PAVING/MEG	+/- 35.70
16	13793593.19	3172504.69	PROP. SIDEWALK/MEG	+/- 35.73'
17	13793593.60	3172509.67	PROP. SIDEWALK/MEG	+/- 35.76'
18	13793599.94	3172504.16	PROP. CONCRETE DRIVEWAY	36.00'
19	13793603.30	3172508.92	PROP. CONCRETE DRIVEWAY	36.05'
20	13793637.32	3172501.24	PROP. CONCRETE DRIVEWAY	36.09'
21	13793631.90	3172506.68	PROP. CONCRETE DRIVEWAY	36.24'
22	13793644.66	3172558.65	PROP. SITE PAVING	37.65'
23	13793657.41	3172571.24	PROP. SITE PAVING	37.83'
24	13793656.37	3172547.30	PROP. SITE PAVING	37.78'
25	13793672.47	3172548.70	PROP. SITE PAVING	37.97'
26	13793673.75	3172564.64	PROP. SITE PAVING	38.00'
27	13793657.08	3172568.12	PROP. SITE PAVING	38.00'
28	13793679.31	3172497.96	PROP. SIDEWALK/MEG	+/- 35.67'
29	13793679.72	3172502.95	PROP. SIDEWALK/MEG	+/- 35.69'
30	13793648.28	3172498.30	PROP. SITE PAVING/MEG	+/- 35.69'
31	13793589.06	3172544.25	PROP. SITE PAVING/MEG	+/- 37.37'
42	13793669.35	3172539.99	PROP. FORCEMAIN MH.	M.P.G.
43	13793631.52	3172548.20	PROP. SITE PAVING	37.50'
44	13793611.74	3172566.59	PROP. TYPE A INLET	37.20'
45	13793619.32	3172533.59	PROP. 6 DIA. STM. MH.	37.74'

PROPOSED POINT TABLE

POINT	NORTHING	EASTING	DESCRIPTION
32	13793643.27	3172562.29	PROP. BOLLARD
33	13793642.77	3172554.79	PROP. BOLLARD
34	13793645.27	3172550.29	PROP. BOLLARD
35	13793637.28	3172542.80	PROP. BOLLARD
36	13793638.76	3172543.63	PROP. BOLLARD
37	13793647.46	3172543.09	PROP. BOLLARD
38	13793652.77	3172546.29	PROP. BOLLARD
39	13793656.75	3172545.97	PROP. BOLLARD
40	13793667.94	3172547.40	PROP. BOLLARD
41	13793671.92	3172547.08	PROP. BOLLARD
47	13793594.87	3172574.11	PROP. BOLLARD
48	13793597.48	3172576.02	PROP. BOLLARD
49	13793643.55	3172570.80	PROP. BOLLARD
50	13793646.25	3172570.62	PROP. BOLLARD
51	13793626.02	3172572.77	PROP. BOLLARD
52	13793625.74	3172569.14	PROP. BOLLARD
53	13793627.83	3172564.38	PROP. BOLLARD
54	13793632.72	3172564.00	PROP. BOLLARD

LEGEND

- EXISTING CONCRETE PAVEMENT
- PROP. 7" THICK CONCRETE PAVEMENT W/6" CEMENT STABALIZED SAN SUBGRADE
- EXISTING CONCRETE SIDEWALK
- PROP. CONCRETE SIDEWALK (SEE NOTE 10)
- ON–SITE SHEET FLOW DIRECTION
- OFFSITE SHEET FLOW DIRECTION (SEE NOTE 3)
- I.P.B.-I — INLET PROTECTION BARRIER–STAGE I
- I.P.B.-II — INLET PROTECTION BARRIER–STAGE II
- DRAINAGE AREA BOUNDARY
- DRAINAGE AREA NO.
- ACRES
- 2–YR FLOW (CFS)
- 100–YR FLOW (CFS)
- DETAIL NO. / DRAWING NO.
- SAW–CUT CONCRETE

10' 0' 10'
SCALE
1" = 10'

N W E S

BENCHMARK:

CITY OF HOUSTON MONUMENT 5751–8613 IS AN ALUMINUM DISC ON TOP OF A CONCRETE INLET LOCATED ON THE NORTHWEST SIDE OF THE INTERSECTION OF GULF PALMS STREET AND SOUTH STREET.

ELEV. 37.22 FEET NAVD 1988, 2001 ADJUSTMENT (PROJECT DATUM)
ELEV. 35.78 FEET NAVD 1988, (GEOID 18')

FLOODPLAIN NOTE:

AS PER FIRM PANEL 48201C1055L DATED JUNE 18, 2007. THIS TRACT IS WITHIN THE UNSHADED ZONE X.
100–YR FLOODPLAIN ELEV. 32.50'
500–YR FLOODPLAIN ELEV. 33.40'
FIRM PANEL: 48201C1055L

T.B.M #25:

SET "X" CUT IN CONC. LOCATED ON THE WEST SIDE OF GULF PALMS STREET APPROX. 630 FT SOUTH FROM THE INTERSECTION OF FUQUA STREET
ELEV.= 36.67 FT.

EXISTING UTILITY NOTE:

EXISTING UNDERGROUND UTILITY INFORMATION (TYPE, SIZE & OWNERSHIP) ARE SHOWN APPROXIMATELY BASED ON THE AVAILABLE RECORD DRAWINGS AND FIELD VERIFICATION (WHERE FEASIBLE) WITHOUT PROBING AND EXCAVATION. NO WARRANTY IS MADE AS TO THE ACCURACY OR COMPLETENESS OF UTILITY LOCATION SHOWN ON THE DRAWING. CAUTION SHOULD BE EXERCISED WHEN EXCAVATING OR BORE AND JACKING IN THE VICINITY OF UNDERGROUND UTILITIES. OWNERS OF THE UTILITIES SHOULD BE NOTIFIED PRIOR TO SUCH ACTIVITIES. CALL UTILITY COORDINATING COMMITTEE AT 713–223–4567, AT LEAST 48 HOURS PRIOR TO EXCAVATING IN THE STREET RIGHT–OF–WAY.

NO.	DATE	REVISION	APP.

NOTICE:
FOR YOUR SAFETY, YOU ARE REQUIRED BY TEXAS LAW TO CALL 811 AT LEAST 48 HOURS BEFORE YOU DIG SO THAT UNDERGROUND LINES CAN BE MARKED. THIS SIGNATURE DOES NOT FULFILL YOUR OBLIGATION TO CALL 811

VERIFICATION OF PRIVATE UTILITY LINES

Date

CenterPoint Energy natural gas utilities shown. (Gas service lines are not shown). This signature not be used for conflict verification.

Signature valid for six months.

Date

CenterPoint Energy/UNDERGROUND Electrical Facilities Verification ONLY. (This signature verifies existing underground facilities – not to be used for conflict verification)

Signature valid for six months.

Date

Approved for AT&T underground conduit facilities only.
Signature valid for one year.

IDS Engineering Group
13430 NW. Freeway, Suite 700
Houston, Tx. 77040
713.462.3178
TxEng Firm 2726 | TxSurv Firm 10110700

THIS DOCUMENT IS RELEASED FOR THE PURPOSE OF REVIEW UNDER THE AUTHORITY OF MARCEL KHOUW, P.E. 101807 ON 05/27/2026. IT IS NOT TO BE USED FOR CONSTRUCTION PURPOSES.

SURVEYED BY: KUO & ASSOCIATES, INC.
TBPE FIRM #F–4578; TBPLS FIRM #1007560

CITY OF HOUSTON
HOUSTON PUBLIC WORKS

LIFT STATION RENEWAL AND REPLACEMENT FY 2023

SOUTH POINT LIFT STATION GRADING PLAN AND DRAINAGE PLAN

WBS NUMBER	FOR CITY OF HOUSTON USE ONLY
R–000267–0179–4	
DRAWING SCALE	
HORIZ: VALUE VERT: N/A	
CITY OF HOUSTON PM	
NAWARAJ PANTA, P.E.	
DWG. NO. SPT–C–05	SHEET NO. 81 OF 361

FILE PATH: \\tdseg.com\FS\Projects\0000\005708500 CoH Lift Stations – FY 2023\CAD\DWG\PRODUCTION\81–SOUTH PNT GRADING.dwg

PLOTTED: 5/13/2026 6:27 PM

FILE PATH: \\Ideqg.com\FS\Projects\0000\0005708500 CoH Lift Stations - FY 2023\CAD\DWG\PRODUCTION\82-SOUTH PNT PLAN AND PROFILE.dwg

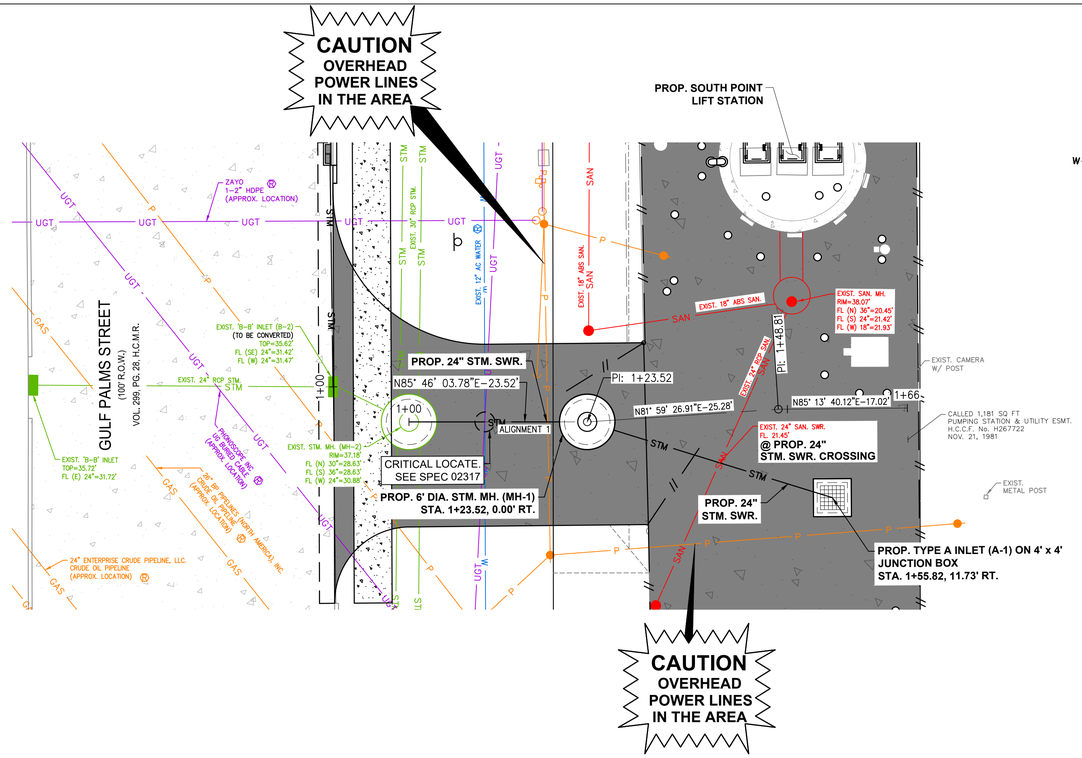

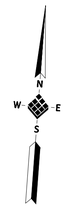

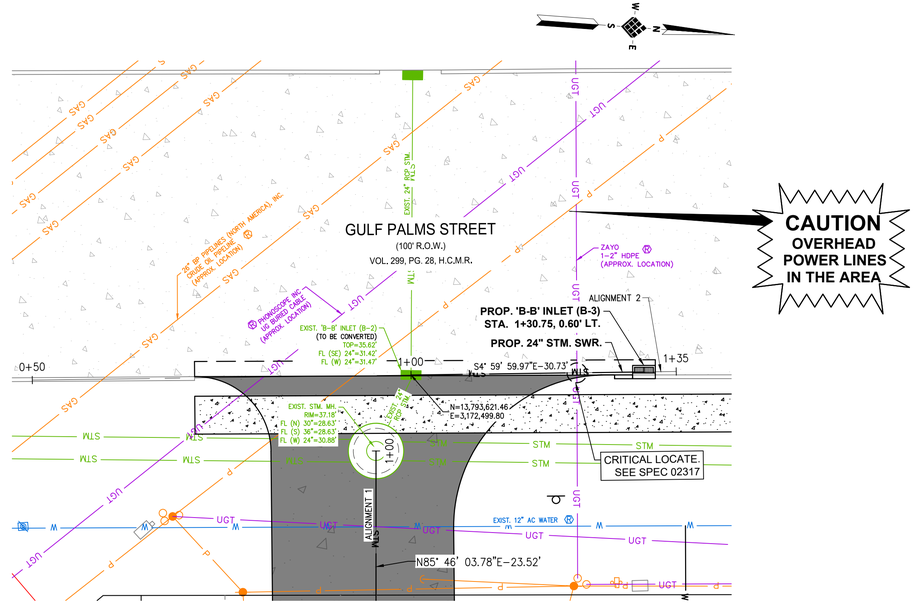

SCALE
10' 0' 10'
H: 1" = 10'
V: 1" = 2'

NO.	DATE	REVISION	APP.

STORM SEWER PROFILE MH-2 TO A-1

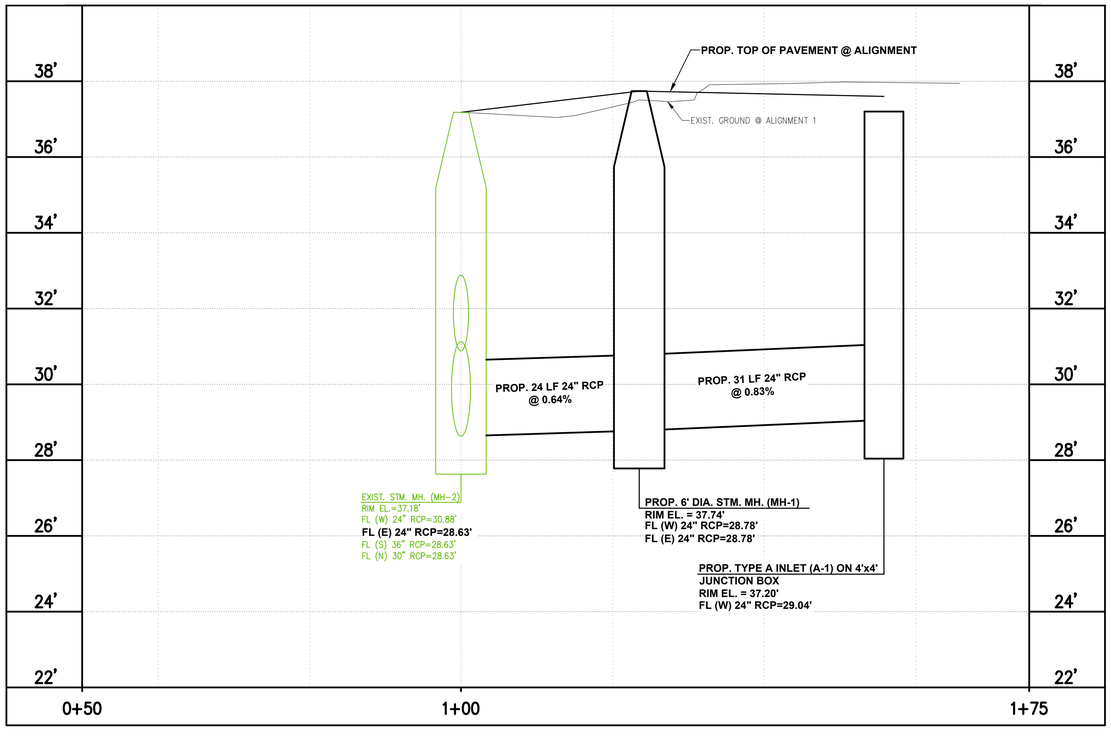

STORM SEWER PROFILE B-2 TO B-3

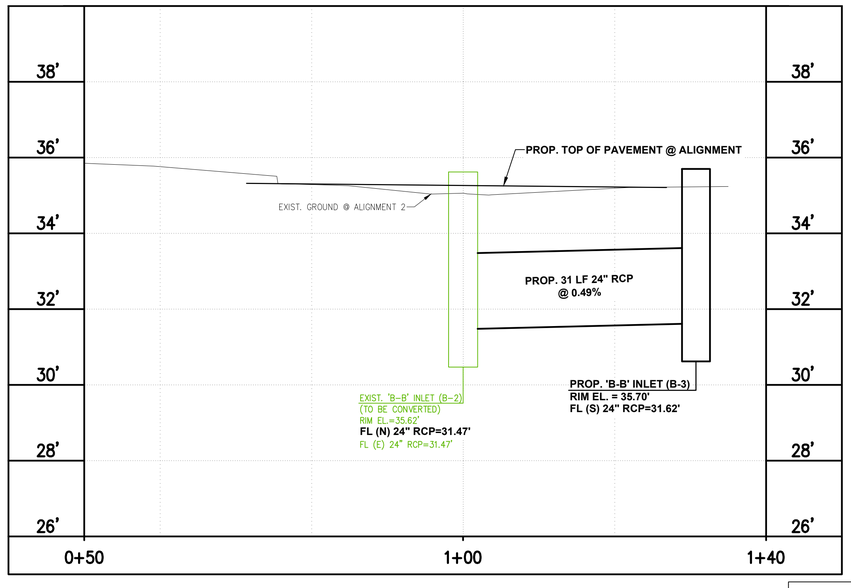

IDS Engineering Group
13430 NW. Freeway, Suite 700
Houston, Tx. 77040
713.462.3178
TxEng Firm 2726 | TxSurv Firm 10110700

SURVEYED BY: KUO & ASSOCIATES, INC.
TBPE FIRM #F-4578; TBPLS FIRM #1007560

THIS DOCUMENT IS RELEASED FOR THE PURPOSE OF REVIEW UNDER THE AUTHORITY OF MARCEL KHOUW, P.E. 101807 ON 05/27/2026. IT IS NOT TO BE USED FOR CONSTRUCTION PURPOSES.

CITY OF HOUSTON
HOUSTON PUBLIC WORKS

LIFT STATION RENEWAL AND REPLACEMENT FY 2023

SOUTH POINT LIFT STATION PLAN AND PROFILE

WBS NUMBER	FOR CITY OF HOUSTON USE ONLY
R-000267-0179-4	
DRAWING SCALE	
HORIZ: 1" = 10' VERT: 1" = 2'	
CITY OF HOUSTON PM	
NAWARAJ PANTA, P.E.	

DWG. NO.	SHEET NO.
SPT-C-06	82 OF 361

PLOTTED: 5/13/2026 6:27 PM

STORM SEWER CALCULATIONS

IDS ENGINEERING GROUP

CLIENT NAME: **CITY OF HOUSTON**
PROJECT NAME: **WBS NO. R-000267-0179-3 - SOUTH POINT LIFT STATION**
IDS JOB NO: **0057-085-00**
DATE PRINTED: May 11, 2026
DATE REVISED: May 11, 2026 BY: CM

SELECT STORM EVENT FREQUENCY: 2 year
SELECT APPROPRIATE LAND USE: Light Industrial
ENTER DESIGN CURB HEIGHT (inches): 0

Re-Generate Formulas

Line	Manhole or Inlet Number U / S	D / S	Reach Length (feet)	Diameter or Rise (inches)	Span (inches)	No. of Barrels	Pipe Material	Pipe Grade Minimum (%)	Pipe Grade Actual (%)	Area (acres)	Sum of Area (acres)	Runoff Coeff.	Sum of C x Area (acres)	Travel Time (minutes)	Time of Concentration (minutes)	Intensity (in./hr.)	Sum of Flows (cfs)	Design Flow (cfs)	Design Velocity (fps)	Actual Velocity (fps)	Hydraulic Gradient (%)	Change in Head (feet)	Upstream Top of Grate (feet)	Hydraulic Grade Upstream (feet)	Hydraulic Grade Downstream (feet)	Manhole Drop (D/S) (feet)	Pipe Flowline Upstream (feet)	Pipe Flowline Downstream (feet)	Depth from Gutter to HGL (feet)	Depth of Cover (feet)	Upstream NG Elev. (feet)	Depth from NG to HGL (feet)
1	A-1	MH-1	28.00	24		1	RCP	0.180%	0.929%	0.08	0.08	0.65	0.05	6.93	21.4	4.07	0.21	21.80	6.94	0.07	0.000%	0.00	37.2	30.78	30.78	0.00	***29.04***	28.78	6.42	6.16	37.6	6.82
2	STM MH	OUT	20.00	24		1	RCP	0.180%	0.750%		0.08	0.65	0.00	4.95	15.0	4.83	0.21	19.59	6.24	0.07	0.000%	0.00	37.6	30.63	30.63	0.00	***28.78***	28.63	6.97	6.82	37.6	6.97
3	B-1	B-2	31.00	24		1	RCP	0.180%	0.484%	0.10	0.10	0.65	0.07	6.18	21.7	4.04	0.26	15.74	5.01	0.08	0.000%	0.00	35.7	33.47	33.47	0.00	***31.62***	31.47	2.23	2.08	37.6	4.13

NOTES:
1. This spreadsheet has been developed using the City of Houston criteria outlined in the November 2023 Infrastructure Design Manual. The Rational Method has been used to calculate flows, and Manning's Formula for pipes flowing full has been used to calculate velocities.
2. This spreadsheet calculates rainfall intensity using the b, d, and e constants for Harris County and the City of Houston, as outlined in Appendix H of the Harris County Infrastructure Regulations, and Chapter 9 of the November 2023 City of Houston Infrastructure Design Manual
3. Minimum storm sewer grades and maximum velocities as established in the City of Houston design criteria have been used to establish the grades used in this system.
4. Land Use "SFR" represents Single-Family Residential development. Land Use "MFR" represents Multi-Family Residential development.
5. Design flow and velocity are based entirely on pipe grade and represent the condition when pipe is flowing full with the hydraulic grade line equal to the pipe grade, and are used to demonstrate that the pipe slopes used in the calculations conform to the City of Houston minimum and maximum standards.

Runoff Coefficient Table	
Land Use	C
SFR (> ½ ac. lots)	0.35
SFR (¼ - ½ ac. lots)	0.45
SFR (< ¼ ac. lots)	0.55
MFR (< 20 d.u./ac.)	0.65
MFR (>= 20 d.u./ac.)	0.80
Business Districts	0.80
Light Industrial	0.65
Heavy Industrial	0.75
Railroad Yard Areas	0.30
Parks/Open Areas	0.18
Land Use Varies	ENTER

Pipe Material	Mannings "n" Value	Pipe Description
CLAY	0.012	Extra Strength Vitrified Clay Pipe
CMP	0.024	Corrugated Metal Pipe
CMPSI	0.013	CMP w/ Smooth Interior
HDPE	0.013	High Density Polyethylene Pipe
PVC	0.013	Polyvinyl Chloride Pipe
RCA	0.013	Reinforced Concrete Arch Pipe
RCB	0.015	Reinforced Concrete Box Culvert
RCE	0.013	Reinforced Concrete Elliptical Pipe
RCP	0.013	Reinforced Concrete Pipe

Rainfall Freq. (yrs)	b	d	e
2 year	***48.35***	***9.07***	***0.7244***
5 year	52.32	7.88	0.6900
10 year	54.68	6.96	0.6623
25 year	57.79	5.89	0.6294
50 year	61.00	5.46	0.6096
100 year	60.66	4.44	0.5797
500 year	62.17	2.95	0.5196

STORM SEWER CALCULATIONS

IDS ENGINEERING GROUP

CLIENT NAME: **CITY OF HOUSTON**
PROJECT NAME: **WBS NO. R-000267-0179-3 - SOUTH POINT LIFT STATION**
IDS JOB NO: **0057-085-00**
DATE PRINTED: May 11, 2026
DATE REVISED: May 11, 2026 BY: CM

SELECT STORM EVENT FREQUENCY: 100 year
SELECT APPROPRIATE LAND USE: Light Industrial
ENTER DESIGN CURB HEIGHT (inches): 0

Re-Generate Formulas

Line	Manhole or Inlet Number U / S	D / S	Reach Length (feet)	Diameter or Rise (inches)	Span (inches)	No. of Barrels	Pipe Material	Pipe Grade Minimum (%)	Pipe Grade Actual (%)	Area (acres)	Sum of Area (acres)	Runoff Coeff.	Sum of C x Area (acres)	Travel Time (minutes)	Time of Concentration (minutes)	Intensity (in./hr.)	Sum of Flows (cfs)	Design Flow (cfs)	Design Velocity (fps)	Actual Velocity (fps)	Hydraulic Gradient (%)	Change in Head (feet)	Upstream Top of Grate (feet)	Hydraulic Grade Upstream (feet)	Hydraulic Grade Downstream (feet)	Manhole Drop (D/S) (feet)	Pipe Flowline Upstream (feet)	Pipe Flowline Downstream (feet)	Depth from Gutter to HGL (feet)	Depth of Cover (feet)	Upstream NG Elev. (feet)	Depth from NG to HGL (feet)
1	A-1	MH-1	28.00	24		1	RCP	0.180%	0.929%	0.08	0.08	0.65	0.05	3.06	21.4	9.21	0.48	21.80	6.94	0.15	0.000%	0.00	37.2	30.78	30.78	0.00	***29.04***	28.78	6.42	6.16	37.6	6.82
2	STM MH	OUT	20.00	24		1	RCP	0.180%	0.750%		0.08	0.65	0.00	2.19	15.0	10.86	0.48	19.59	6.24	0.15	0.000%	0.00	37.6	30.63	30.63	0.00	***28.78***	28.63	6.97	6.82	37.6	6.97
3	B-1	B-2	31.00	24		1	RCP	0.180%	0.484%	0.10	0.10	0.65	0.07	2.73	21.7	9.15	0.60	15.74	5.01	0.19	0.001%	0.00	35.7	33.47	33.47	0.00	***31.62***	31.47	2.23	2.08	37.6	4.13

NOTES:
1. This spreadsheet has been developed using the City of Houston criteria outlined in the November 2023 Infrastructure Design Manual. The Rational Method has been used to calculate flows, and Manning's Formula for pipes flowing full has been used to calculate velocities.
2. This spreadsheet calculates rainfall intensity using the b, d, and e constants for Harris County and the City of Houston, as outlined in Appendix H of the Harris County Infrastructure Regulations, and Chapter 9 of the November 2023 City of Houston Infrastructure Design Manual
3. Minimum storm sewer grades and maximum velocities as established in the City of Houston design criteria have been used to establish the grades used in this system.
4. Land Use "SFR" represents Single-Family Residential development. Land Use "MFR" represents Multi-Family Residential development.
5. Design flow and velocity are based entirely on pipe grade and represent the condition when pipe is flowing full with the hydraulic grade line equal to the pipe grade, and are used to demonstrate that the pipe slopes used in the calculations conform to the City of Houston minimum and maximum standards.

Runoff Coefficient Table	
Land Use	C
SFR (> ½ ac. lots)	0.35
SFR (¼ - ½ ac. lots)	0.45
SFR (< ¼ ac. lots)	0.55
MFR (< 20 d.u./ac.)	0.65
MFR (>= 20 d.u./ac.)	0.80
Business Districts	0.80
Light Industrial	0.65
Heavy Industrial	0.75
Railroad Yard Areas	0.30
Parks/Open Areas	0.18
Land Use Varies	ENTER

Pipe Material	Mannings "n" Value	Pipe Description
CLAY	0.012	Extra Strength Vitrified Clay Pipe
CMP	0.024	Corrugated Metal Pipe
CMPSI	0.013	CMP w/ Smooth Interior
HDPE	0.013	High Density Polyethylene Pipe
PVC	0.013	Polyvinyl Chloride Pipe
RCA	0.013	Reinforced Concrete Arch Pipe
RCB	0.015	Reinforced Concrete Box Culvert
RCE	0.013	Reinforced Concrete Elliptical Pipe
RCP	0.013	Reinforced Concrete Pipe

Rainfall Freq. (yrs)	b	d	e
2 year	48.35	9.07	0.7244
5 year	52.32	7.88	0.6900
10 year	54.68	6.96	0.6623
25 year	57.79	5.89	0.6294
50 year	61.00	5.46	0.6096
100 year	***60.66***	***4.44***	***0.5797***
500 year	62.17	2.95	0.5196

Master Spreadsheet - Storm Sewer Calculations Updated 02/10/2025
\\idseg.com\FS\Projects\0000\005708500 CoH Lift Stations - FY 2023\Eng\Calcs\Drainage\[2. South Point Drainage Calcs.xlsx]CALCULATIONS

NO.	DATE	REVISION	APP.

IDS Engineering Group
13430 NW. Freeway, Suite 700
Houston, Tx. 77040
713.462.3178
TxEng Firm 2726 | TxSurv Firm 10110700

SURVEYED BY: KUO & ASSOCIATES, INC.
TBPE FIRM #F-4578; TBPLS FIRM #1007560

THIS DOCUMENT IS RELEASED FOR THE PURPOSE OF REVIEW UNDER THE AUTHORITY OF MARCEL KHOUW, P.E. 101807 ON 05/27/2026. IT IS NOT TO BE USED FOR CONSTRUCTION PURPOSES.

CITY OF HOUSTON
HOUSTON PUBLIC WORKS

LIFT STATION RENEWAL AND REPLACEMENT FY 2023

SOUTH POINT LIFT STATION DRAINAGE CALCULATIONS

WBS NUMBER	FOR CITY OF HOUSTON USE ONLY
R-000267-0179-4	
DRAWING SCALE	
HORIZ: N/A VERT: N/A	
CITY OF HOUSTON PM	
NAWARAJ PANTA, P.E.	
DWG. NO. SPT-C-07	SHEET NO. 83 OF 361

FILE PATH: \\idseg.com\FS\Projects\0000\005708500 CoH Lift Stations - FY 2023\CAD\DWG\PRODUCTION\83-SOUTH PNT CALCULATIONS.dwg

PLOTTED: 5/13/2026 6:28 PM

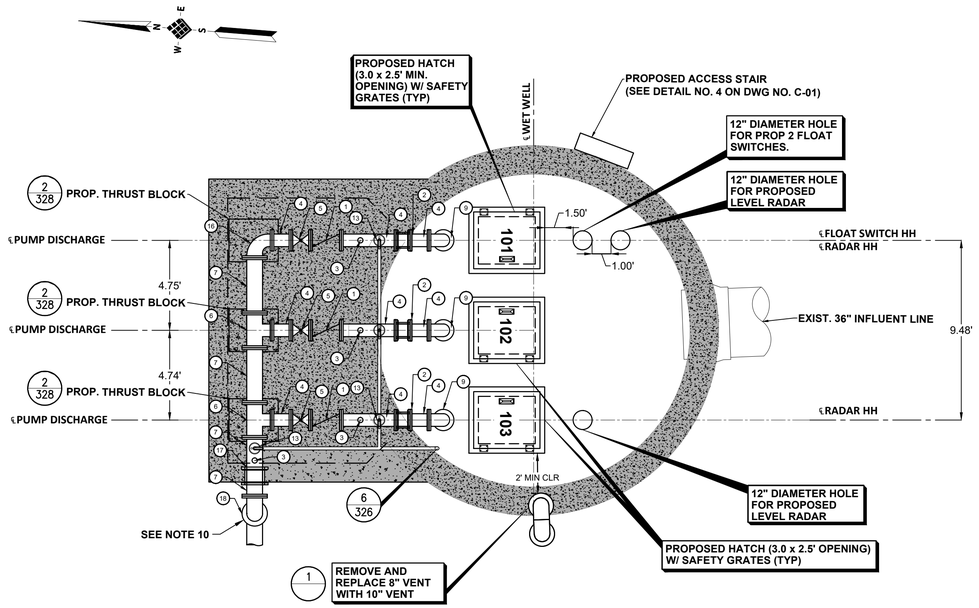

PLAN VIEW AT GRADE

SCALE: 1"=4'

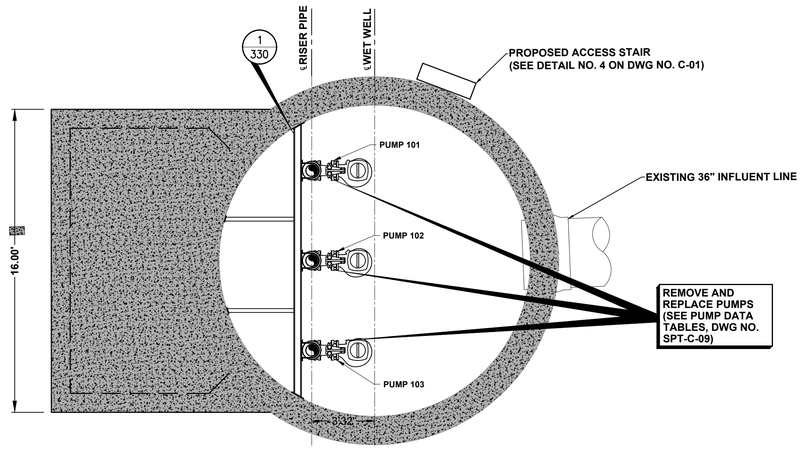

SECTION A-A VIEW A

SCALE: 1" = 4'

KEYED NOTE	ITEM	QTY
1	CHECK VALVE (8")	3
2	FLEXIBLE COUPLING (8")	3
3	PRESSURE GAUGE ASSEMBLY	3
4	SPOOL PIECE (8")	7
5	PLUG VALVE (8")	3
6	TEE (10" x 8")	2
7	SPOOL PIECE (10")	4
8	RISER PIPING (8")	3
9	90° ELBOW (8")	3
11	316 STAINLESS STEEL SUPPORT	6
12	45° BEND (8")	6
13	2" AIR RELEASE & VACUUM VALVE ASSEMBLY	4
14	ADJUSTABLE PIPE SUPPORT	3
15	ECCENTRIC REDUCER (8"x6")	3
16	REDUCING 90 DEGREE BEND TEE (10" X 8") W/ BLIND FLANGE (10")	1
17	FLEXIBLE COUPLING (10")	1
18	90° BEND (10")	1

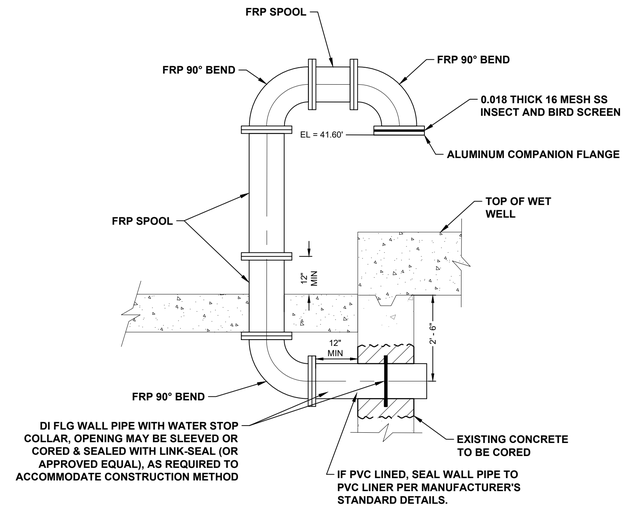

EXISTING STRUCTURE PENETRATION AND PROPOSED VENT 1

SCALE: N.T.S.

NOTES:

1. ABRASIVE BLAST AND COAT ALL PIPING AND FITTINGS NOT BEING REPLACED IN WET WELL.
2. CONTRACTOR TO VERIFY DIMENSIONS REQUIRED TO INSTALL AND OPERATE VALVES.
3. EXISTING LIFT STATION WET WELL STRUCTURE TO REMAIN.
4. UV PROTECTIVE COATINGS ARE REQUIRED BY THE CITY OF HOUSTON ON ALL VENT PIPES.
5. LABEL HATCHES WITH THE CORRESPONDING PUMP NUMBER USING A 12–INCH BY 6–INCH ALUMINUM PLATE ENGRAVED WITH 1.5–INCH LETTERING WELDED TO THE HATCH.
6. CONTRACTOR TO CONFIRM SIZE AND LOCATION OF THE WET WELL HATCHES PER HATCH AND PUMP MANUFACTURER REQUIREMENT.
7. PUMP AND ANCHOR BOLTS ARE TO BE ADHESIVE TYPE, AND EMBEDDED IN THE CONCRETE SLAB. CONTRACTOR TO SUBMIT DESIGN OF PUMP ANCHOR BOLTS AND PATTERN, INCLUDING CALCULATIONS, DURING SHOP DRAWING SUBMISSION.
8. ALL PIPING IN THE WET WELL SHALL BE FLANGED. NO FLANGED COUPLING ADAPTORS, OR VICTAULIC STYLE COUPLINGS SHALL BE PERMITTED INSIDE OF THE WET WELL.
9. ACCESS HATCHES SHALL BE ALUMINUM AND FOREST GREEN. SAFETY GRATING SHALL BE FURNISHED WITH SAFETY ORANGE POWDER COAT FINISH.
10. PIPING BELOW 90 DEGREE BEND (KEY NOTE 18) IS NOT SHOWN. THIS PIPING SHALL BE INCLUDED IN LUMP SUM BID ITEMS.
11. WET WELL TO BE COATED WITH PROTECTIVE COATING PER PROJECT SPECIFICATIONS, CONSULT WITH THE CITY OF HOUSTON PROJECT MANAGER FOR APPROVED PRODUCTS. COATING SHALL COVER ALL CONCRETE SURFACES, AND SHALL EXTEND TO A MINIMUM OF 12–INCHES BELOW THE LOW WATER ELEVATION.

NO.	DATE	REVISION	APP.

LEGEND

- # / # — DETAIL NO. / SHEET NO.
- EXISTING CONCRETE
- PROPOSED CONCRETE

IDS Engineering Group
13430 NW. Freeway, Suite 700
Houston, Tx. 77040
713.462.3178
TxEng Firm 2726 | TxSurv Firm 10110700

SURVEYED BY: KUO & ASSOCIATES, INC.
TBPE FIRM #F-4578; TBPLS FIRM #1007560

THIS DOCUMENT IS RELEASED FOR THE PURPOSE OF REVIEW UNDER THE AUTHORITY OF MARCEL KHOUW, P.E. 101807 ON 05/27/2026. IT IS NOT TO BE USED FOR CONSTRUCTION PURPOSES.

CITY OF HOUSTON
HOUSTON PUBLIC WORKS

LIFT STATION RENEWAL AND REPLACEMENT FY 2023

SOUTH POINT LIFT STATION PLAN AT GRADE AND BASE

WBS NUMBER	FOR CITY OF HOUSTON USE ONLY
R–000267–0179–4	
DRAWING SCALE	
HORIZ: AS NOTED VERT: N/A	
CITY OF HOUSTON PM	
NAWARAJ PANTA, P.E.	
DWG. NO. SPT–C–08	SHEET NO. 84 OF 361

FILE PATH: \\idseg.com\FS\Projects\0000\005708500 CoH Lift Stations – FY 2023\CAD\DWG\PRODUCTION\84–SOUTH PNT PLAN AT GRADE.dwg

PLOTTED: 5/13/2026 6:28 PM

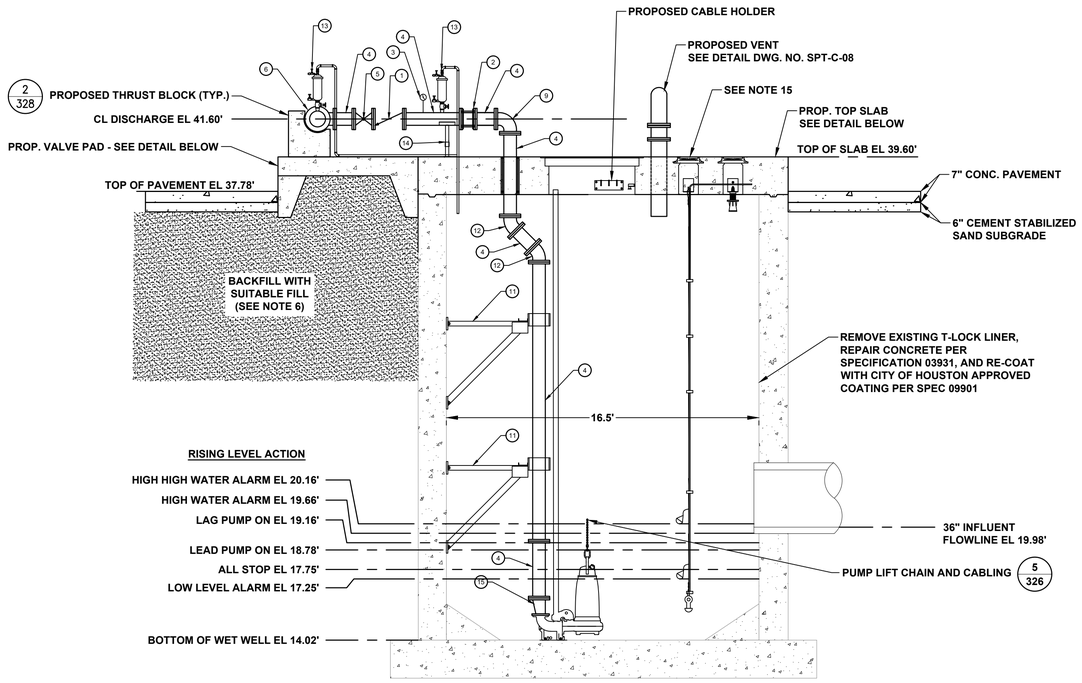

SECTIONAL ELEVATION A

SCALE: 1" = 4'

STATION OPERATING TABLES

PROPOSED CONDITION - 2.3 MGD

RISING WATER LEVEL

WATER LEVEL ELEVATION	ACTION	PUMP(S) IN OPERATION
17.75	PUMPS OFF LEVEL - NO ACTION	ALL PUMPS ARE OFF
18.78	LEAD PUMP TURNS ON	LEAD PUMP ON
19.16	LAG PUMP TURNS ON	LEAD AND LAG PUMP ON
19.66	HIGH WATER ALARM ON	HIGH WATER ALARM SOUND
20.16	HIGH HIGH WATER ALARM ON (FLOAT ON LEVEL)	FIRM PUMPS OM (FLOATS)

FALLING WATER LEVEL

WATER LEVEL ELEVATION	ACTION	PUMP(S) IN OPERATION
20.16	FLOAT OFF LEVEL	FIRM PUMPS OFF (FLOATS)
19.66	HIGH WATER LEVEL ALARM OFF	LEAD AND LAG PUMP ON
18.78	LEAD PUMP TURNS OFF	LAG PUMP ON
17.75	LAG PUMP TURNS OFF	ALL PUMPS STOPPED - STANDBY PUMP SWITCHES TO LEAD PUMP PUMP ON
17.25	LOW LEVEL ALARM	-

PUMP DATA TABLE*

PUMP CHARACTERISTICS	PUMP NO. 1	PUMP NO. 2	PUMP NO. 3
MOTOR DATA			
NOMIMAL SIZE (HP)	14	14	14
MAX SPEED (RPM)	1600	1600	1600
SOLIDS PASSAGE			
MINIMUM SPHERE (IN)	3	3	3
CAPACITY (GPM)			
DESIGN	800	800	800
RUNOUT	1800	1800	1800
DISCHARGE HEAD (FT)			
DESIGN	35.16	35.16	35.16
RUNOUT	4	4	4
SHUT OFF	90.5	90.5	90.5
EFFICIENCY (%)			
DESIGN	76.6	77.6	76.6
NPSHR (FT)			
DESIGN	14.3	14.3	14.3
RUNOUT	40.4	40.4	40.4
PUMP CYCLE TIME (MIN)	6	6	6
CUMULATIVE CAPACITY (GPM)	1,050	1,600	-

*FLYGT 6030 N150 used for all pump calculations.

NOTES:

1. ABRASIVE BLAST AND COAT ALL PIPING AND FITTINGS NOT BEING REPLACED IN WET WELL.
2. CONTRACTOR TO VERIFY DIMENSIONS REQUIRED TO INSTALL AND OPERATE VALVES.
3. EXISTING LIFT STATION WET WELL STRUCTURE TO REMAIN.
4. UV PROTECTIVE COATINGS ARE REQUIRED BY THE CITY OF HOUSTON ON ALL VENT PIPES.
5. LABEL HATCHES WITH THE CORRESPONDING PUMP NUMBER USING A 12–INCH BY 6–INCH ALUMINUM PLATE ENGRAVED WITH 1.5–INCH LETTERING WELDED TO THE HATCH.
6. FILL VOID LEFT BY REMOVAL OF EXISTING VALVE VAULT WITH SUITABLE FILL.
7. SEE ELECTRICAL PLANS FOR ADDITIONAL IMPROVEMENTS.
8. ABRASIVE BLAST AND COAT TO BE IN ACCORDANCE WITH SYSTEM 108 PER SPEC SECTION 09901 PART 2.03J.
9. CONTRACTOR TO CONFIRM SIZE AND LOCATION OF THE WET WELL HATCHES PER HATCH AND PUMP MANUFACTURER REQUIREMENTS
10. PUMP AND ANCHOR BOLTS ARE TO BE ADHESIVE TYPE, AND EMBEDDED IN THE CONCRETE SLAB. CONTRACTOR TO SUBMIT DESIGN OF PUMP ANCHOR BOLTS AND PATTERN, INCLUDING CALCULATIONS, DURING SHOP DRAWING SUBMISSION.
11. ALL PIPING IN THE WET WELL SHALL BE FLANGED. NO FLANGED COUPLING ADAPTORS, OR VICTAULIC STYLE COUPLINGS SHALL BE PERMITTED INSIDE OF THE WET WELL.
12. ACCESS HATCHES SHALL BE FOREST GREEN. SAFETY GRATING SHALL BE FURNISHED WITH SAFETY ORANGE POWDER COAT FINISH.
13. INSTALL PLUG VALVES TO OPEN UPWARDS AND TO CLOSE TO A SEATING POSITION.
14. INSTALL CHECK VALVE SO THAT THE WEIGHT LEVER POSITION IS APPROXIMATELY 45 DEGREES BELOW THE VALVE HORIZONTAL CENTER LINE IN THE VALVE HORIZONTAL CENTER LINE IN THE FULL OPEN POSITION.
15. PROPOSED FLOAT SWITCH AND LEVEL RADARS SHOWN FOR REFERENCE. REFER TO DWG. NO. SPT–C–08 AND LCK–E–06 FOR LOCATION AND SIZE.
16. CONTRACTOR TO SUBMIT A WET WELL TOP SLAB STRUCTURAL PLAN SIGN AND SEALED BY A REGISTERED ENGINEER IN THE STATE OF TEXAS.
17. WET WELL TO BE COATED WITH PROTECTIVE COATING PER PROJECT SPECIFICATIONS, CONSULT WITH THE CITY OF HOUSTON PROJECT MANAGER FOR APPROVED PRODUCTS. COATING SHALL COVER ALL CONCRETE SURFACES, AND SHALL EXTEND TO A MINIMUM OF 12–INCHES BELOW THE LOW WATER ELEVATION.

DESIGN POINT
1,597 GPM @ 46.80 FT

SOUTH POINT LIFT STATION
REHABILITATION - FLYGT 6030 N150

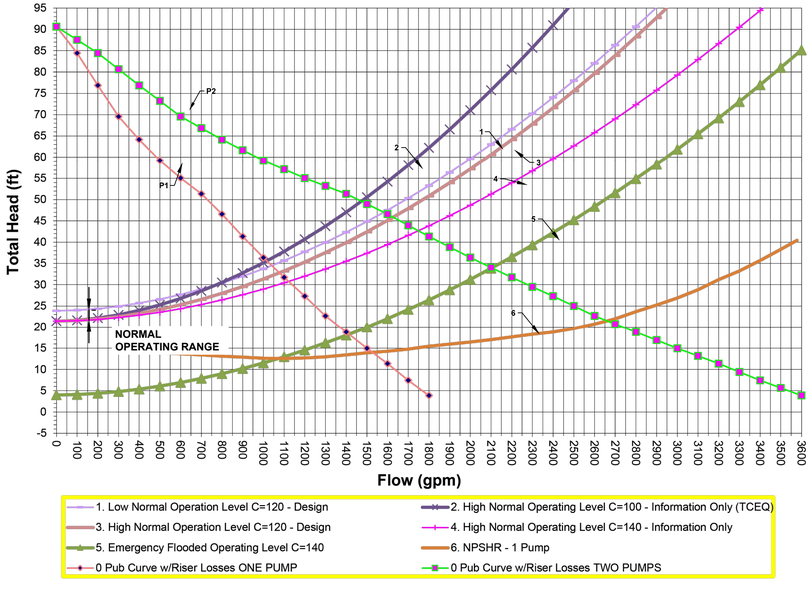

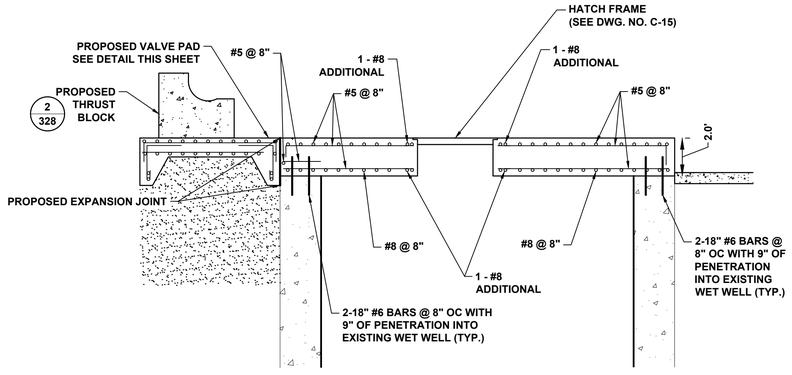

WET WELL TOP SLAB DETAIL

SCALE: 1" = 4' (SEE NOTE 16)

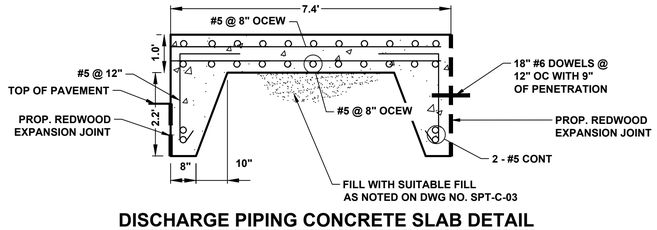

DISCHARGE PIPING CONCRETE SLAB DETAIL

SCALE: 1" = 2'

KEYED NOTE	ITEM	QTY
1	CHECK VALVE (8")	3
2	FLEXIBLE COUPLING (8")	3
3	PRESSURE GAUGE ASSEMBLY	4
4	SPOOL PIECE (8")	7
5	PLUG VALVE (8")	3
6	TEE (10" x 8")	2
7	SPOOL PIECE (10")	4
8	RISER PIPING (8")	3
9	90° ELBOW (8")	3
11	316 STAINLESS STEEL SUPPORT	6
12	45° BEND (8")	6
13	2" AIR RELEASE & VACUUM VALVE ASSEMBLY	4
14	ADJUSTABLE PIPE SUPPORT	3
15	ECCENTRIC REDUCER (8"x6")	3
16	TEE (10" X 8") W/ BLIND FLANGE (10")	1
17	FLEXIBLE COUPLING (10")	1
18	90° BEND (10")	1

LEGEND

- # / # — DETAIL NO. / SHEET NO.
- EXISTING CONCRETE
- PROPOSED CONCRETE
- PROP. SUITABLE FILL

NO.	DATE	REVISION	APP.

IDS Engineering Group
13430 NW. Freeway, Suite 700
Houston, Tx. 77040
713.462.3178
TxEng Firm 2726 | TxSurv Firm 10110700

SURVEYED BY: KUO & ASSOCIATES, INC.
TBPE FIRM #F–4578; TBPLS FIRM #1007560

THIS DOCUMENT IS RELEASED FOR THE PURPOSE OF REVIEW UNDER THE AUTHORITY OF MARCEL KHOUW, P.E. 101807 ON 05/27/2026. IT IS NOT TO BE USED FOR CONSTRUCTION PURPOSES.

CITY OF HOUSTON
HOUSTON PUBLIC WORKS

LIFT STATION RENEWAL AND REPLACEMENT FY 2023

SOUTH POINT LIFT STATION ELEVATION SECTION

WBS NUMBER	FOR CITY OF HOUSTON USE ONLY
R–000267–0179–4	
DRAWING SCALE	
HORIZ: AS NOTED VERT: N/A	
CITY OF HOUSTON PM	
NAWARAJ PANTA, P.E.	
DWG. NO. SPT–C–09	SHEET NO. 85 OF 361

FILE PATH: \\idseg.com\FS\Projects\0000\005708500 CoH Lift Stations – FY 2023\CAD\DWG\PRODUCTION\85–SOUTH PNT ELEV SECTION.dwg

PLOTTED: 5/13/2026 6:28 PM

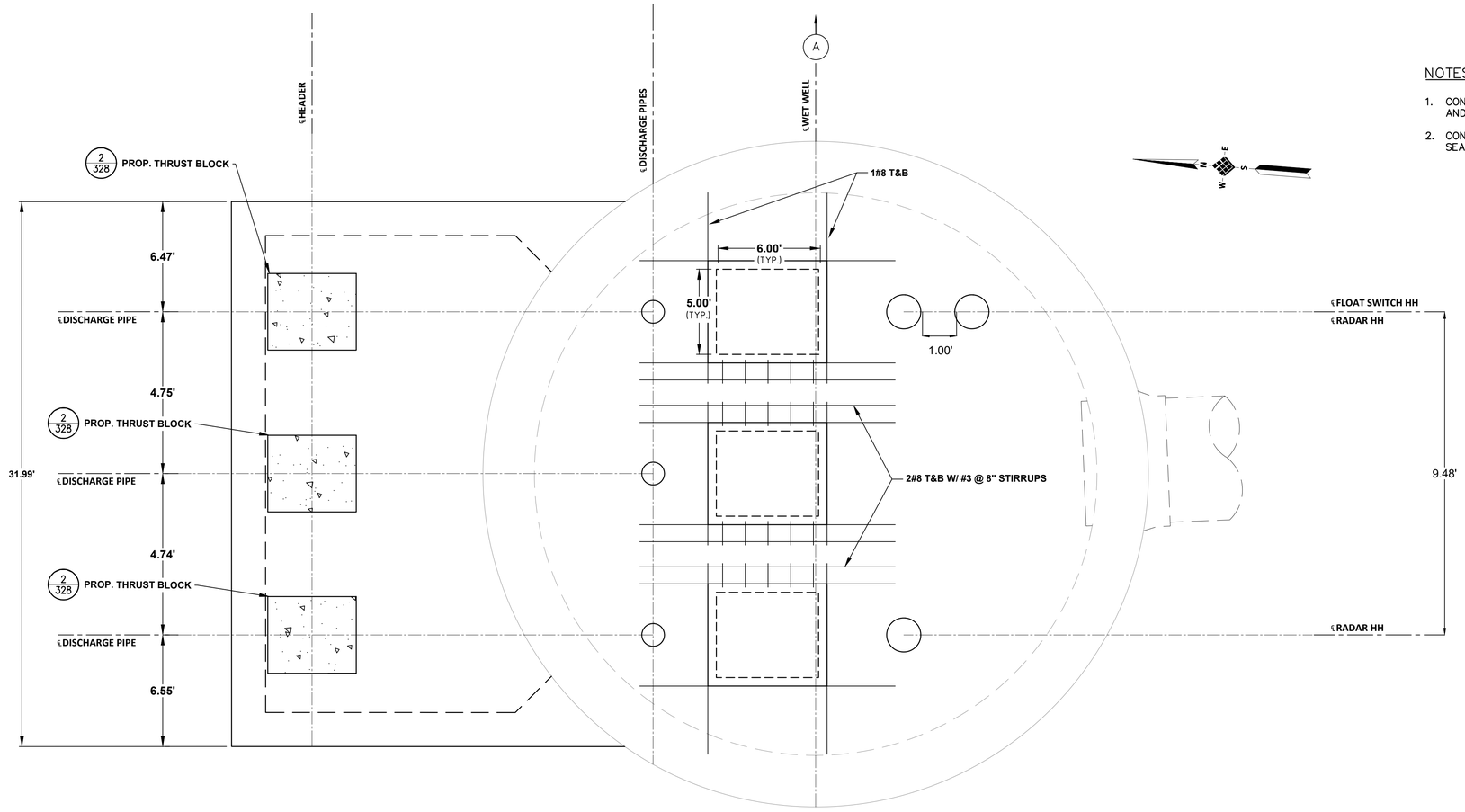

TOP SLAB DETAIL

SCALE: 1" = 2'

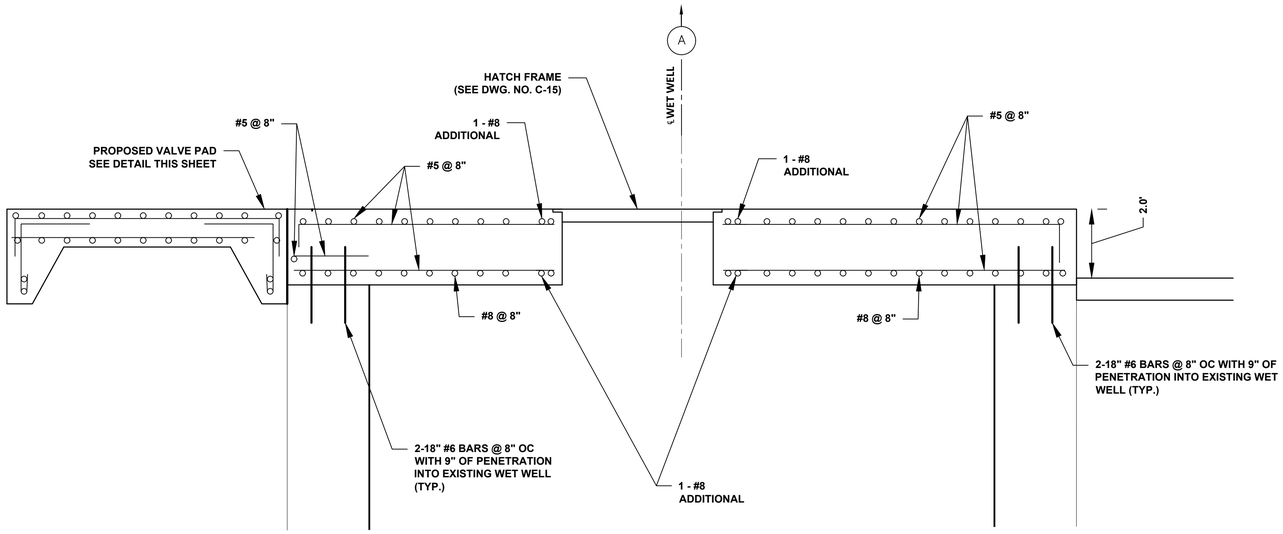

WET WELL TOP SLAB DETAIL

SCALE: 1" = 2' (SEE NOTE 16)

2' 0' 2'

SCALE

1" = 2'

NOTES:

1. CONTRACTOR TO CONFIRM SIZE AND LOCATION OF THE WET WELL HATCHES PER HATCH AND PUMP MANUFACTURER REQUIREMENTS
2. CONTRACTOR TO SUBMIT A WET WELL TOP SLAB STRUCTURAL PLAN SIGNED AND SEALED BY A REGISTERED ENGINEER IN THE STATE OF TEXAS.

NO.	DATE	REVISION	APP.

KEYED NOTE	ITEM	QTY
1	CHECK VALVE (8")	3
2	FLEXIBLE COUPLING (8")	3
3	PRESSURE GAUGE ASSEMBLY	3
4	SPOOL PIECE (8")	7
5	PLUG VALVE (8")	3
6	TEE (10" x 8")	2
7	SPOOL PIECE (10")	4
8	RISER PIPING (8")	3
9	90° ELBOW (8")	3
11	316 STAINLESS STEEL SUPPORT	6
12	45° BEND (8")	6
13	2" AIR RELEASE & VACUUM VALVE ASSEMBLY	4
14	ADJUSTABLE PIPE SUPPORT	3
15	ECCENTRIC REDUCER (8"x6")	3
16	REDUCING 90 DEGREE BEND TEE (10" X 8") W/ BLIND FLANGE (10")	1
17	FLEXIBLE COUPLING (10")	1
18	90° BEND (10")	1

LEGEND

- # / # — DETAIL NO. / SHEET NO.
- EXISTING CONCRETE
- PROPOSED CONCRETE

IDS Engineering Group
13430 NW. Freeway, Suite 700
Houston, Tx. 77040
713.462.3178
TxEng Firm 2726 | TxSurv Firm 10110700

SURVEYED BY: KUO & ASSOCIATES, INC.
TBPE FIRM #F-4578; TBPLS FIRM #1007560

THIS DOCUMENT IS RELEASED FOR THE PURPOSE OF REVIEW UNDER THE AUTHORITY OF MARCEL KHOUW, P.E. 101807 ON 05/27/2026. IT IS NOT TO BE USED FOR CONSTRUCTION PURPOSES.

CITY OF HOUSTON

HOUSTON PUBLIC WORKS

LIFT STATION RENEWAL AND REPLACEMENT FY 2023

SOUTH POINT LIFT STATION TOP SLAB DETAIL

WBS NUMBER	FOR CITY OF HOUSTON USE ONLY
R-000267-0179-4	
DRAWING SCALE	
HORIZ: 1" = 2' VERT: N/A	
CITY OF HOUSTON PM	
NAWARAJ PANTA, P.E.	

DWG. NO.	SHEET NO. 86 OF 361
SPT-C-10	

FILE PATH: \\idseg.com\FS\Projects\0000\005708500 CoH Lift Stations - FY 2023\CAD\DWG\PRODUCTION\86-SOUTH PNT TOP SLAB DETAIL.dwg

PLOTTED: 5/13/2026 6:28 PM
FILE PATH: \\dseg.com\FS\Projects\0000\005708500 CoH Lift Stations - FY 2023\CAD\DWG\PRODUCTION\87-SOUTH PNT RECORD DWG.dwg

NO.	DATE	REVISION	APP.

NOTES

1. SEE DETAIL AND STRUCTURAL DRAWINGS FOR DIMENSIONS AND INFORMATION NOT SHOWN.
2. CONTRACTOR TO CONFIRM SIZE AND LOCATION OF THE WET WELL HATCHES PER SELECTED HATCH AND PUMP MANUFACTURERS' REQUIREMENTS.

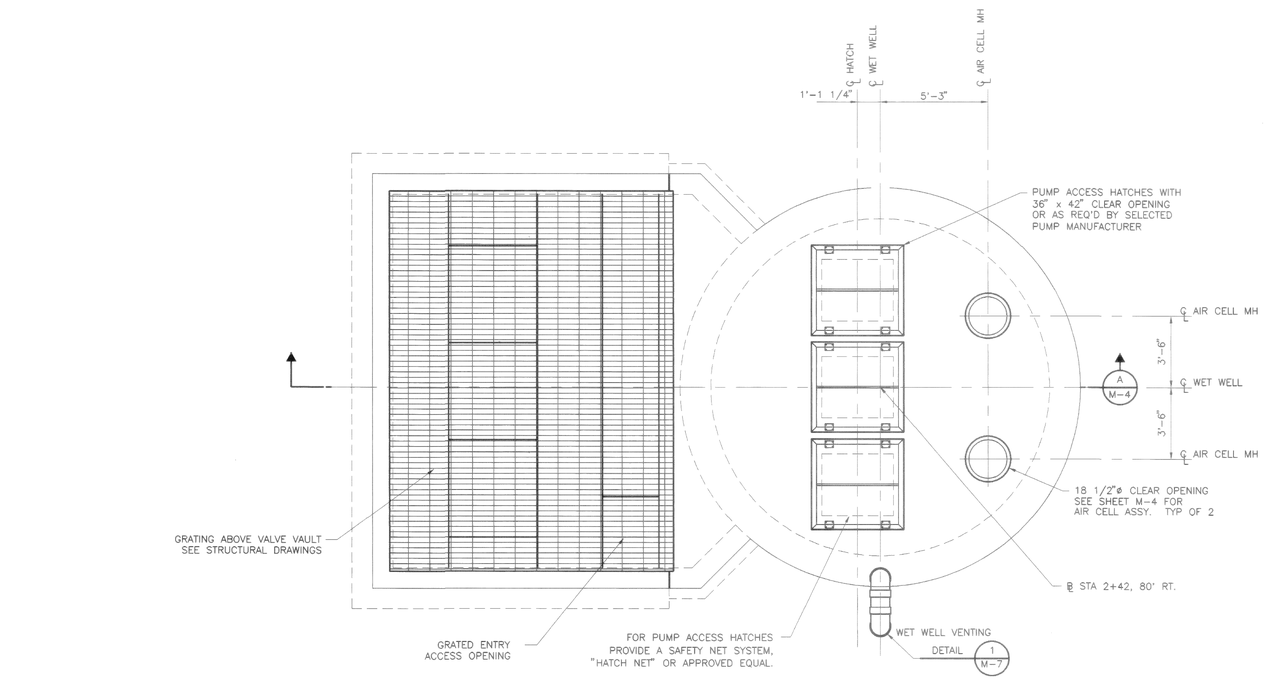

PLAN VIEW @ GRADE

SEAL
STATE OF TEXAS
DAVID J. ROSS
68267
REGISTERED
PROFESSIONAL ENGINEER

CADD DWG FILE NO : D:\62400\M-2.DWG

0 1 2 3 ORIGINAL SCALE IN INCHES FOR REDUCED PLANS

REV. NO.	DESCRIPTION	APP'D	DATE

AS BUILT

Binkley & Barfield, Inc.
Consulting Engineers
1710 Seamist Drive Houston, Texas 77008

LIFT STATION
PLAN
MECHANICAL

PROJECT NO.
R-1209-02-3

TITLE
SOUTHPOINT LIFT STATION, FORCE MAIN, AND RELIEF SEWER

CITY OF HOUSTON
DEPARTMENT OF PUBLIC WORKS AND ENGINEERING
ENGINEERING, CONSTRUCTION AND REAL ESTATE GROUP

SECTION APPROVALS

WATER ENGINEERING	TRAFFIC AND DRAIN. ENGINEERING 5/13/26
WASTEWATER ENGINEERING 5/14/26	STREET & BRIDGE ENGINEERING
STORM SEWER ENGINEERING 5/13/26	CONSTRUCTION 5/14/26

OTHER DEPARTMENTS

PLANNING AND DEVELOPMENT SPONSOR DEPARTMENT

CITY ENGINEER DATE 5/14/26

DIRECTOR OF PUBLIC WORKS AND ENGINEERING DATE 5/12/26

SUBMITTED: MAY 24, 1996	DESIGNED BY: RCB
SCALE: 3/8"=1'-0"	DRAWN BY: AAA
DATE: MAY, 1996	SHEET: M-2
SURVEY BY: RATNALA & BAHL INC	SHT NO. 36 of 71 SHTS
F B NO: P-3052 & P-3052-A	CITY DWG NO: 32661

IDS Engineering Group
13430 NW. Freeway, Suite 700
Houston, Tx. 77040
713.462.3178
TxEng Firm 2726 | TxSurv Firm 10110700

SURVEYED BY: KUO & ASSOCIATES, INC.
TBPE FIRM #F-4578; TBPLS FIRM #1007560

THIS DOCUMENT IS RELEASED FOR THE PURPOSE OF REVIEW UNDER THE AUTHORITY OF MARCEL KHOUW, P.E. 101807 ON 05/27/2026. IT IS NOT TO BE USED FOR CONSTRUCTION PURPOSES.

CITY OF HOUSTON
HOUSTON PUBLIC WORKS

LIFT STATION RENEWAL AND REPLACEMENT FY 2023

EXISTING LIFT STATION RECORD DRAWING (SHEET 1 OF 3)

WBS NUMBER	FOR CITY OF HOUSTON USE ONLY
R-000267-0179-4	
DRAWING SCALE	
HORIZ: N.T.S. VERT: N/A	
CITY OF HOUSTON PM	
NAWARAJ PANTA, P.E.	
SHEET NO. 87 OF 361	

DWG. NO.
SPT-C-11

FOR REFERENCE ONLY

PLOTTED: 5/13/2026 6:28 PM

FILE PATH: \\tdseg.com\FS\Projects\0000\005708500 CoH Lift Stations - FY 2023\CAD\DWG\PRODUCTION\88-SOUTH PNT RECORD DWG.dwg

NO.	DATE	REVISION	APP.

NOTES

1. SEE DETAIL AND STRUCTURAL DRAWINGS DIMENSIONS AND INFORMATION NOT SHOWN
2. ✳ DIMENSIONS NOTED ARE RELATIVE TO THE PUMP SIZE AND MANUFACTURER SELECTED. CONTRACTOR SHALL CONFIRM.

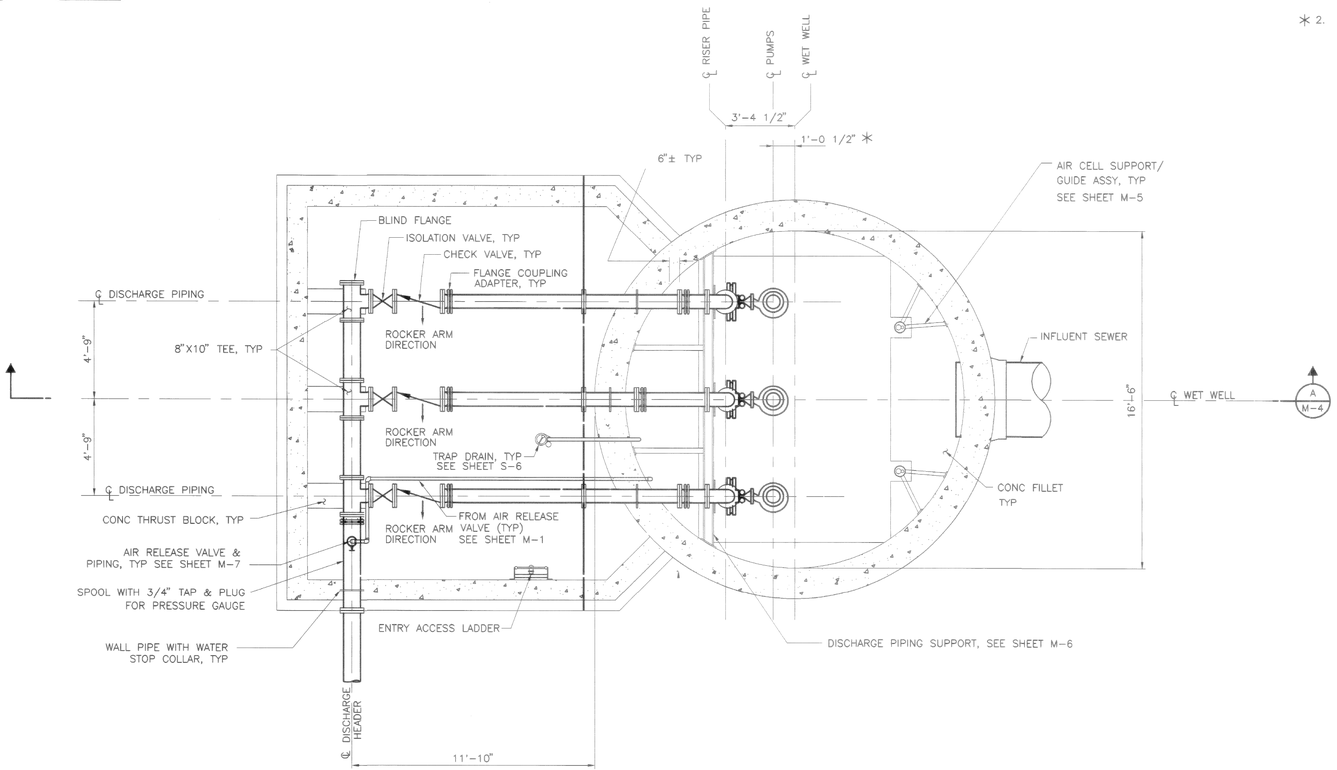

PLAN VIEW @ DISCHARGE PIPING

SEAL
STATE OF TEXAS
DAVID J. ROSS
68267
REGISTERED
PROFESSIONAL ENGINEER

CADD DWG FILE NO. D:\62400\M-3.DWG

0 1 2 3 ORIGINAL SCALE IN INCHES FOR REDUCED PLANS

REV NO.	DESCRIPTION	APP'D	DATE

AS BUILT

Binkley & Barfield, Inc.
Consulting Engineers
1710 Seamist Drive Houston, Texas 77008

LIFT STATION
PLAN SECTION
MECHANICAL

PROJECT NO. R-1209-02-3

TITLE SOUTHPOINT LIFT STATION, FORCE MAIN, AND RELIEF SEWER

CITY OF HOUSTON
DEPARTMENT OF PUBLIC WORKS AND ENGINEERING
ENGINEERING, CONSTRUCTION AND REAL ESTATE GROUP

SECTION APPROVALS

WATER ENGINEERING	TRAFFIC AND SIGNAL ENGINEERING
WASTEWATER ENGINEERING	STREET & BRIDGE ENGINEERING
STORM SEWER ENGINEERING	CONSTRUCTION

OTHER DEPARTMENTS

PLANNING AND DEVELOPMENT SPONSOR DEPARTMENT

CITY ENGINEER DATE

DIRECTOR OF PUBLIC WORKS AND ENGINEERING DATE

SUBMITTED: MAY 24, 1996
SCALE: 3/8"=1'-0"
DATE: MAY, 1996
SURVEY BY: RATNALA & BAHL, INC
F B NO: P-3052 & P-3052-A

DESIGNED BY: RCB
DRAWN BY: AAA
SHEET: M-3
SHT NO 37 of 71 SHTS

CITY DWG NO: 32661

IDS Engineering Group
13430 NW. Freeway, Suite 700
Houston, Tx. 77040
713.462.3178
TxEng Firm 2726 | TxSurv Firm 10110700

SURVEYED BY: KUO & ASSOCIATES, INC.
TBPE FIRM #F-4578; TBPLS FIRM #1007560

THIS DOCUMENT IS RELEASED FOR THE PURPOSE OF REVIEW UNDER THE AUTHORITY OF MARCEL KHOUW, P.E. 101807 ON 05/27/2026. IT IS NOT TO BE USED FOR CONSTRUCTION PURPOSES.

CITY OF HOUSTON
HOUSTON PUBLIC WORKS

LIFT STATION RENEWAL AND REPLACEMENT FY 2023

EXISTING LIFT STATION RECORD DRAWING (SHEET 2 OF 3)

WBS NUMBER	FOR CITY OF HOUSTON USE ONLY
R-000267-0179-4	
DRAWING SCALE	
HORIZ: N.T.S. VERT: N/A	
CITY OF HOUSTON PM	
NAWARAJ PANTA, P.E.	
SHEET NO. 88 OF 361	

DWG. NO. SPT-C-12

FOR REFERENCE ONLY

PLOTTED: 5/13/2026 6:28 PM

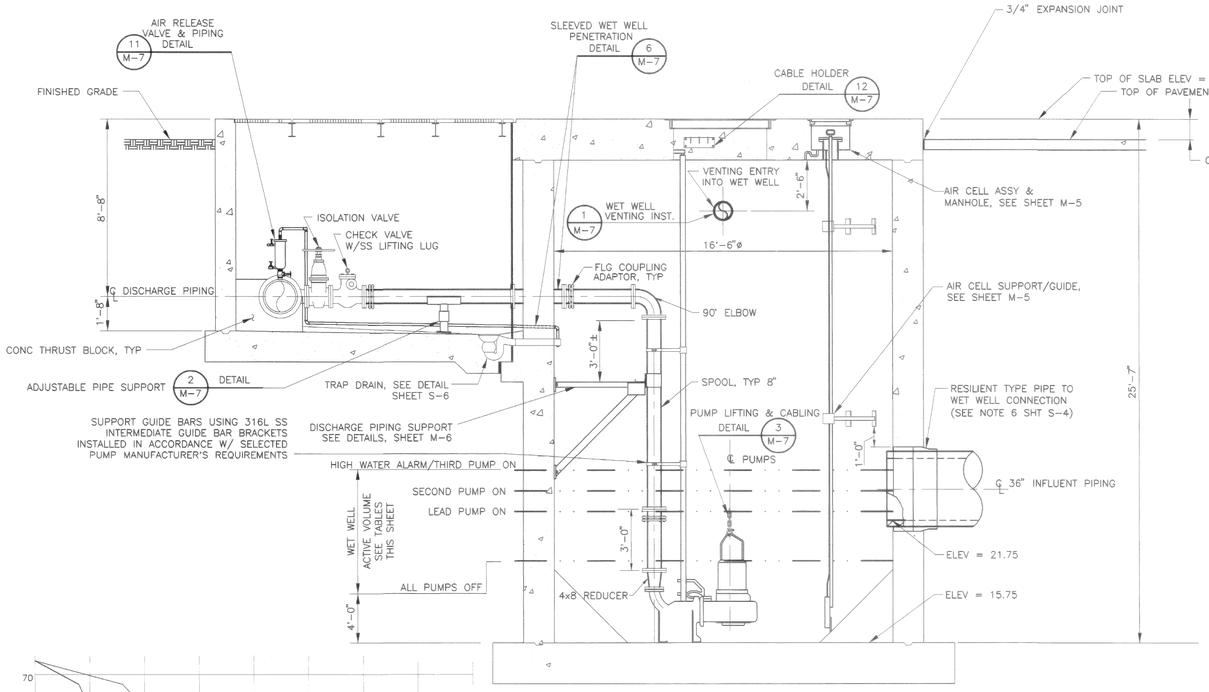

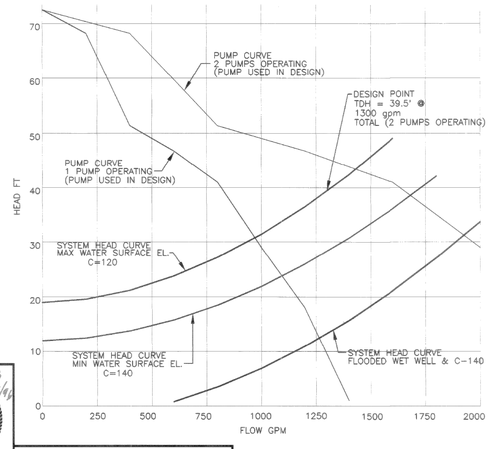

SECTION A M-2

ALL WET WELL FILLETS NOT SHOWN FOR CLARITY

NOTES:

1. DIMENSIONS NOTED ARE RELATIVE TO THE PUMP SIZE AND MANUFACTURER SELECTED. CONTRACTOR SHALL VERIFY.
2. SEE DETAIL AND STRUCTURAL DRAWINGS FOR DIMENSIONS AND INFORMATION NOT SHOWN.

STATION OPERATION TABLES

SOUTH POINT LS		
RISING LEVEL CYCLE		
WATER LEVEL ELEVATION	ACTION	PUMP(S) IN OPERATION
19.75	PUMPS OFF LEVEL – NO ACTION	ALL PUMPS ARE OFF
22.18	LEAD PUMP TURNS ON	LEAD PUMP ON
23.18	SECOND PUMP TURNS ON	LEAD & SECOND PUMP ON
24.18	SPARE PUMP TURNS ON	ALL PUMPS ON
24.18	HIGH WATER ALARM ON	HIGH WATER ALARM SOUND
FALLING LEVEL CYCLE		
WATER LEVEL ELEVATION	ACTION	PUMP(S) IN OPERATION
23.68	HIGH WATER LEVEL ALARM OFF	ALL PUMPS ON
20.75	LEAD PUMP TURNS OFF	SECOND & SPARE PUMPS ON
19.75	SECOND PUMP TURNS OFF	SPARE PUMP ON
19.75	SPARE PUMP TURNS OFF	ALL PUMPS STOPPED – SECOND PUMP SWITCHES TO LEAD PUMP

PUMP(S) IN OPERATION	OPERATING CAPACITY TOTAL GPM	OPERATING CAPACITY T.D. HEAD IN FEET	NOMINAL PUMP SPEED RPM	MINIMUM PUMP DISCHARGE SIZE
ONE PUMP ALONE	900	35.0	1150	4 x 4
TWO PUMPS IN PARALLEL *	1300	39.5		

AS BUILT

** INDICATES DESIGN CONDITION FOR PUMP SELECTION (RATED CAPACITY)*

SEAL
STATE OF TEXAS
DAVID J. ROSS
68267
LICENSED
PROFESSIONAL ENGINEER
8/13/96

CADD DWG FILE NO : D:\62400\M-4.DWG

0 1 2 3 ORIGINAL SCALE IN INCHES FOR REDUCED PLANS

REV NO	DESCRIPTION	APP'D	DATE

Binkley & Barfield, Inc.
Consulting Engineers
1710 Seamist Drive Houston, Texas 77008

LIFT STATION
SECTION
MECHANICAL

PROJECT NO
R-1209-02-3

TITLE
SOUTHPOINT LIFT STATION, FORCE MAIN, AND RELIEF SEWER

CITY OF HOUSTON
DEPARTMENT OF PUBLIC WORKS AND ENGINEERING
ENGINEERING, CONSTRUCTION AND REAL ESTATE GROUP

SECTION APPROVALS

WATER ENGINEERING	TRAFFIC AND SIGNAL ENGINEERING 8/13/96
WASTEWATER ENGINEERING 8/8/96	STREET & BRIDGE ENGINEERING
STORM SEWER ENGINEERING 8/8/96	CONSTRUCTION 8/14/96

OTHER DEPARTMENTS

PLANNING AND DEVELOPMENT	SPONSOR DEPARTMENT
CITY ENGINEER DATE 8/12/96	
DIRECTOR OF PUBLIC WORKS AND ENGINEERING DATE 8/14/96	

SUBMITTED: MAY 24, 1996
SCALE: 3/8" = 1'-0"
DATE: MAY, 1996
SURVEY BY: RATNALA & BAHL INC
F B NO: P-3052 & P-3052-A

DESIGNED BY: RCB
DRAWN BY: AAA
SHEET: M-4
SHT NO 38 of 71 SHTS
CITY DWG NO: 32661

IDS Engineering Group
13430 NW. Freeway, Suite 700
Houston, Tx. 77040
713.462.3178
TxEng Firm 2726 | TxSurv Firm 10110700

SURVEYED BY: KUO & ASSOCIATES, INC.
TBPE FIRM #F-4578; TBPLS FIRM #1007560

THIS DOCUMENT IS RELEASED FOR THE PURPOSE OF REVIEW UNDER THE AUTHORITY OF MARCEL KHOUW, P.E. 101807 ON 05/27/2026. IT IS NOT TO BE USED FOR CONSTRUCTION PURPOSES.

CITY OF HOUSTON
HOUSTON PUBLIC WORKS

LIFT STATION RENEWAL AND REPLACEMENT FY 2023

EXISTING LIFT STATION RECORD DRAWING (SHEET 3 OF 3)

WBS NUMBER	FOR CITY OF HOUSTON USE ONLY
R-000267-0179-4	
DRAWING SCALE	
HORIZ: N.T.S. VERT: N/A	
CITY OF HOUSTON PM	
NAWARAJ PANTA, P.E.	

DWG. NO.	SHEET NO. 89 OF 361
SPT-C-13	

FOR REFERENCE ONLY

NO.	DATE	REVISION	APP.

FILE PATH: \\idseg.com\FS\Projects\0000\005708500 CoH Lift Stations - FY 2023\CAD\DWG\PRODUCTION\89-SOUTH PNT RECORD DWG.dwg

PLOTTED: 5/12/2026 8:45 PM



EXISTING CONTROL PANEL (1)

PHOTOGRAPH A
NTS
-



EXISTING PUMP J-BOX NO.1, NO.2, NO.3 (2)

PHOTOGRAPH B
NTS
-

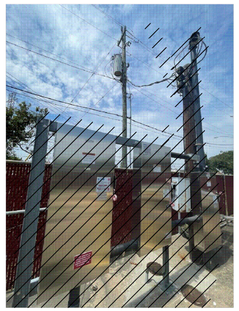

EXISTING SERVICE POLE AND SERVICE RACK (3)

PHOTOGRAPH C
NTS
-



EXISTING LIGHT POLE (4)

PHOTOGRAPH D
NTS
-

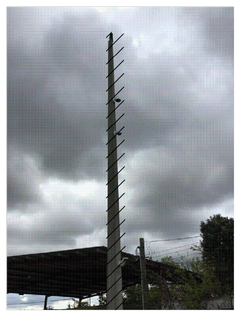

EXISTING WIMAX POLE (5)

PHOTOGRAPH E
NTS
-

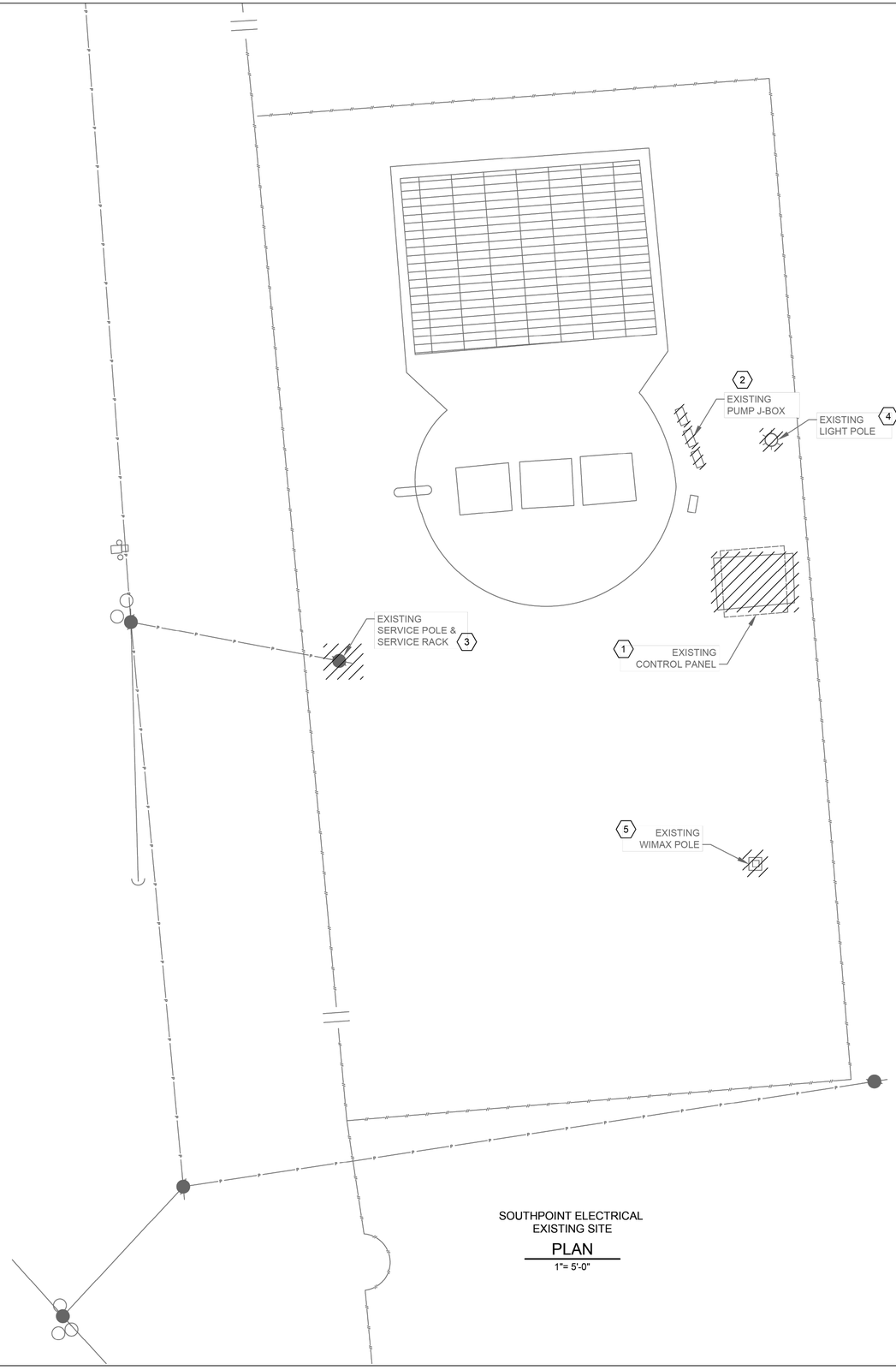

SOUTHPOINT ELECTRICAL EXISTING SITE PLAN
1"= 5'-0"

SCALE: 1"= 5'

0' 5' 10' 15'

NOTES BY SYMBOL "(#)":

1. EXISTING CONTROL PANEL TO BE DEMOLISHED AND REMOVED.
2. EXISTING PUMP NO.1, NO.2, NO.3 J-BOX TO BE DEMOLISHED AND REMOVED.
3. EXISTING SERVICE POLE AND RACK TO BE DEMOLISHED AND REMOVED.
4. EXISTING LIGHT POLE TO BE DEMOLISHED AND REMOVED.
5. EXISTING WIMAX POLE TO BE DEMOLISHED AND REMOVED.

GENERAL NOTES:

1. THE OWNER HAS THE RIGHT OF FIRST REFUSAL TO THE EQUIPMENT BEING REMOVED. CONTRACTOR SHALL DELIVER THE EQUIPMENT WHICH OWNER WISHES TO KEEP AT LOCATION DESIGNATED BY THE OWNER. SEE SPECIFICATIONS SECTION 16060 FOR ELECTRICAL DEMOLITION.

NO.	DATE	REVISION	APP.

FOR INTERIM REVIEW
ONLY NOT INTENDED FOR
PERMIT, BIDDING OR
CONSTRUCTION PURPOSES.
ENGINEER:
HOSS FOROUZAN
P.E. SERIAL NO.77748
05/18/2026

GAI
Gupta & Associates, Inc.
CONSULTING ENGINEERING
Registration No. F-2593
302 Dennis St.,
Houston, Texas 77006
Tel: 713-636-2916
Fax: 713-636-2987
email: hforouzan@gaiconsulting.com

IDS Engineering Group
13430 NW. Freeway
Suite 700
Houston, Tx. 77040
713.462.3178
TxEng Firm 2726
TxSurv Firm 10110700

CITY OF HOUSTON
HOUSTON PUBLIC WORKS

LIFT STATION RENEWAL
AND REPLACEMENT FY 2023

SOUTHPOINT LIFT STATION ELECTRICAL DEMOLITION SITE PLAN

WBS NUMBER	FOR CITY OF HOUSTON USE ONLY
R-000267-0179-4	
DRAWING SCALE	
HORIZ:1"=5'-0" VERT:1"=5'-0"	
CITY OF HOUSTON PM	
NAWARAJ PANTA, P.E.	

DWG. NO.	SHEET NO.
SPT-E-01	90 OF 361

IDS JOB No. 0057-085-00

FILE PATH: O:\H8108_Lift Station Rehabilitation And Reconstruction (IDS)\6 Drawings\Electrical\Working\South Point\H8108_SPT-E-01.dwg

PLOTTED: 5/12/2026 8:45 PM

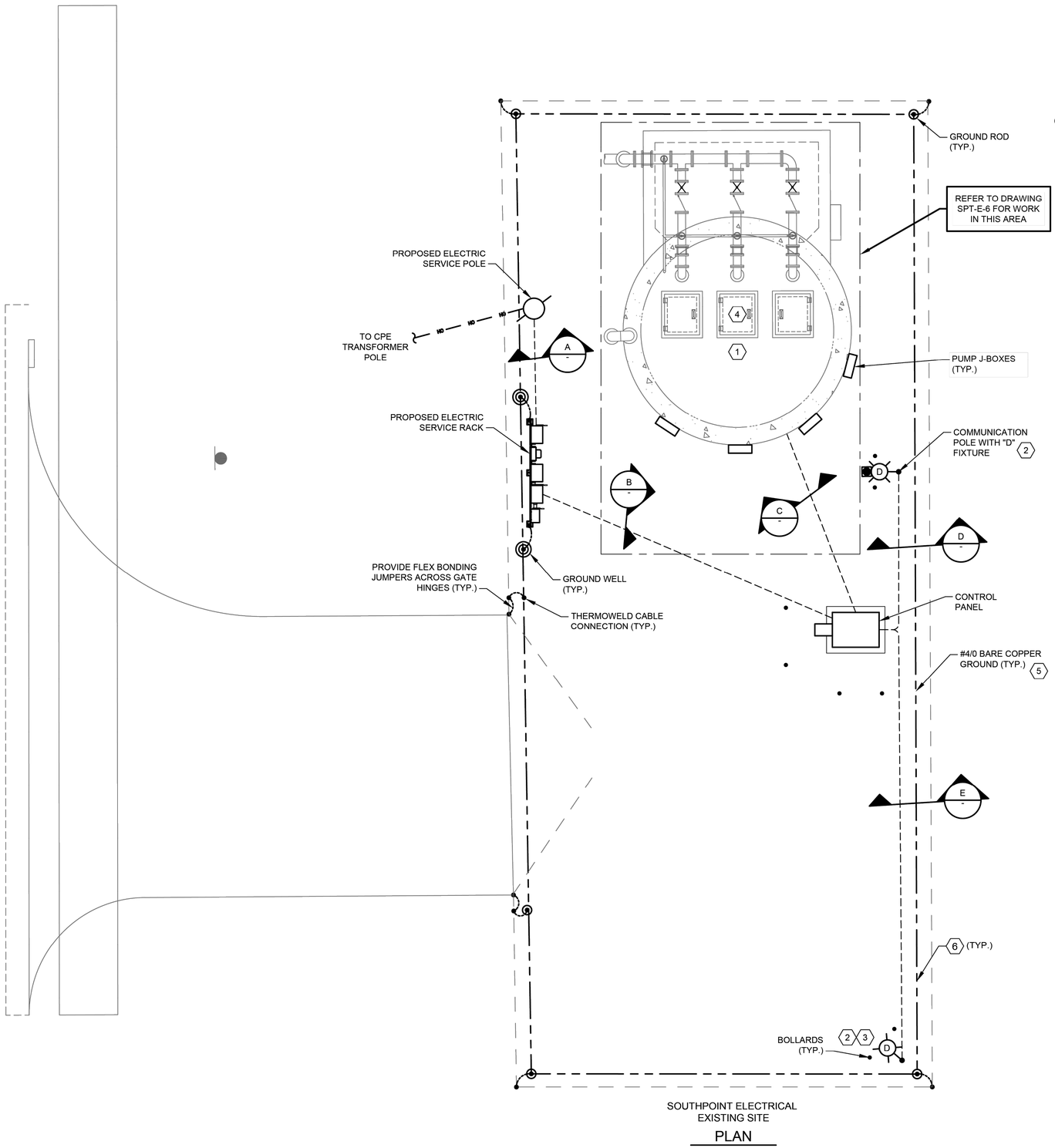

SOUTHPOINT ELECTRICAL EXISTING SITE

PLAN

1"= 5'-0"

NOTES:

1. THE ELECTRICAL INSTALLATION IN THE WET WELL SHALL BE EXPLOSION PROOF, IN ACCORDANCE WITH THE NATIONAL ELECTRICAL CODE FOR CLASS I, DIVISION 1 LOCATIONS.
2. YARD LIGHT CONTROLLED BY LIGHTING SWITCH.
3. TYPE "B" FIXTURE TO BE INSTALLED ON THE POLE PROVIDING WIRES FOR THE "B" LIGHT.
4. INSIDE WETWELL RATED NEMA CLASS , DIV. 1, OUTSIDE ABOVE GROUND, AROUND WETWELL RATED CLASS 1, DIV. 2 ACCORDING TO NFPA 820.
5. GROUNDING LOOP SHALL BE BURIED 30" BELOW FINISHED GRADE.
6. #2/0 BARE COPPER GROUND TO BE BONDED TO FENCE POST.

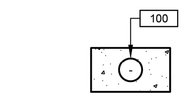

DUCTBANK

SECTION A

NTS

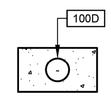

DUCTBANK

SECTION B

NTS

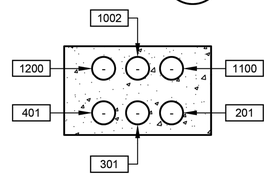

DUCTBANK

SECTION C

NTS

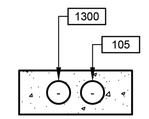

DUCTBANK

SECTION D

NTS

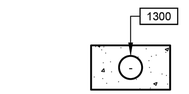

DUCTBANK

SECTION E

NTS

FOR INTERIM REVIEW ONLY NOT INTENDED FOR PERMIT, BIDDING OR CONSTRUCTION PURPOSES.
ENGINEER:
HOSS FOROUZAN
P.E. SERIAL NO.77748
05/18/2026

GAI
Gupta & Associates, Inc.
CONSULTING ENGINEERING
Registration No. F-2593
302 Dennis St.,
Houston, Texas 77006
Tel: 713-636-2936
Fax: 713-636-2987
email: hforouzan@gaiconsulting.com

IDS Engineering Group
13430 NW. Freeway
Suite 700
Houston, Tx. 77040
713.462.3178
TxEng Firm 2726
TxSurv Firm 10110700

CITY OF HOUSTON
HOUSTON PUBLIC WORKS

LIFT STATION RENEWAL AND REPLACEMENT FY 2023

SOUTHPOINT LIFT STATION PROPOSED ELECTRICAL SITE PLAN

WBS NUMBER	FOR CITY OF HOUSTON USE ONLY
R-000267-0179-4	
DRAWING SCALE	
HORIZ:1"=5'-0" VERT:1"=5'-0"	
CITY OF HOUSTON PM	
NAWARAJ PANTA, P.E.	
DWG. NO. SPT-E-02	SHEET NO. 91 OF 361

NO.	DATE	REVISION	APP.

FILE PATH: O:\H8108_Lift Station Rehabilitation And Reconstruction (IDS)\6 Drawings\Electrical\Working\South Point\H8108_SPT-E-02.dwg

IDS JOB No. 0057-085-00

PLOTTED: 5/12/2026 8:45 PM

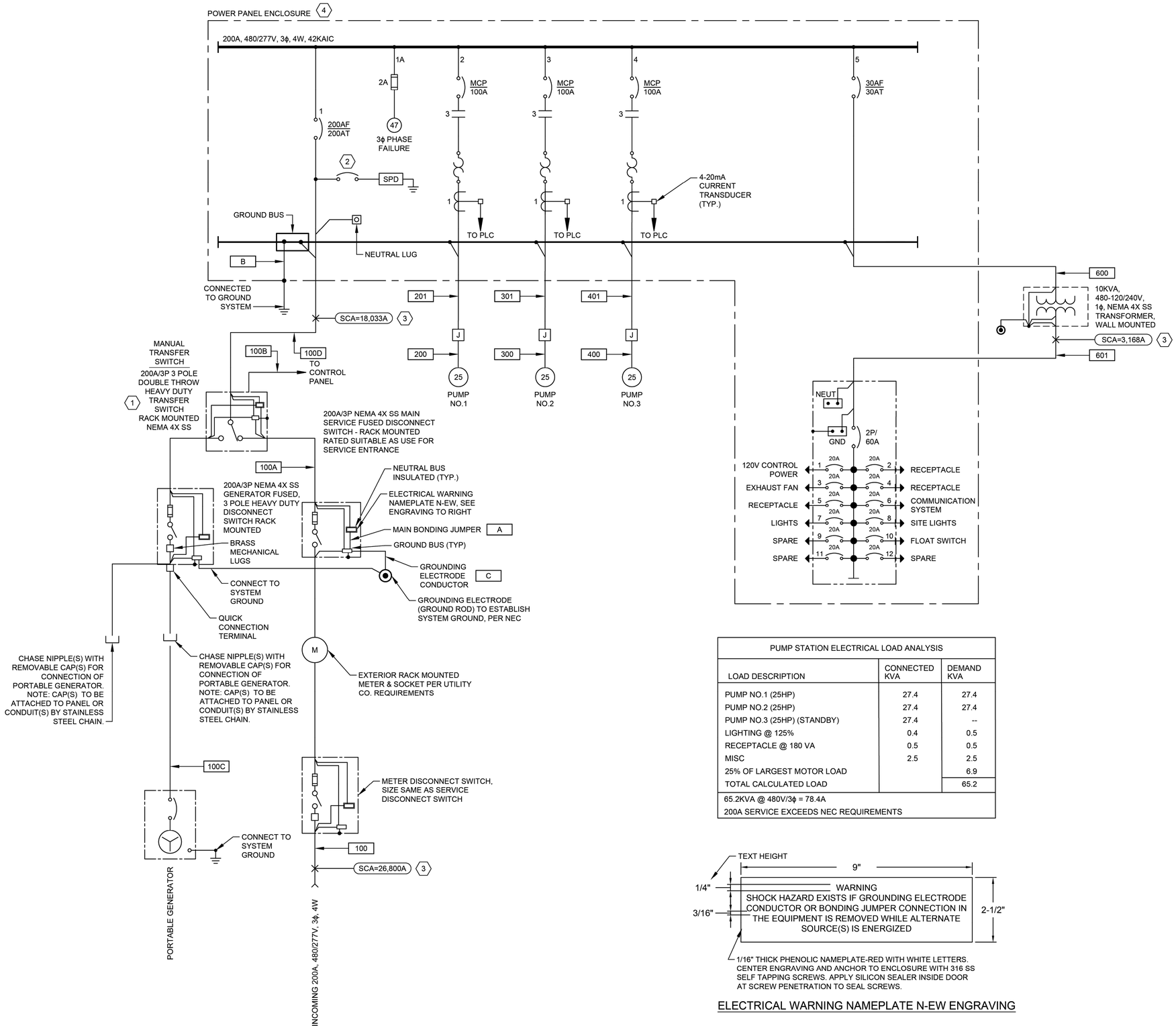

NOTES:

1. PROVIDE A NORMALLY OPEN (NO) AUXILIARY CONTACT ON BOTH ON POSITIONS.
2. PROVIDE BREAKER ACCORDING TO MANUFACTURER'S REQUIREMENTS.
3. POINT TO POINT METHOD IS USED FOR SHORT CIRCUIT CURRENT CALCULATION.
4. CONTRACTOR SHALL PROVIDE A PERMANENTLY AFFIXED LABEL (2" X 3"0 SHOWING THE AVAILABLE FAULT CURRENT AND CALCULATION DATE. THE LABEL SHALL BE BLUE LETTERING ON A CONTRASTING BACKGROUND.
5. THE INSULATION TYPES OF ALL ELECTRICAL CONDUCTORS USED IN THE PROJECT HAVE BEEN SPECIFIED IN ELECTRICAL SPECIFICATIONS (16120, 16121, AND 16122). THE TYPES OF CONDUITS USED IN THE PROJECT HAS BEEN SPECIFIED IN ELECTRICAL SPECIFICATIONS 16111.

GENERAL NOTES:

1. NO ELECTRICAL MATERIAL, APPARATUS, DEVICES, APPLIANCES, FIXTURES, OR EQUIPMENT SHALL BE SOLD OR INSTALLED IN THE CITY UNLESS THEY ARE IN CONFORMANCE WITH THE PROVISIONS OF SECTION 508 CITY OF HOUSTON ELECTRICAL CODE, THE LAWS OF THE STATE OF TEXAS AND ANY APPLICABLE RULES AND REGULATIONS ISSUED UNDER THE AUTHORITY OF THE STATE STATUES. THE MAKER'S NAME, TRADEMARK, OR OTHER IDENTIFICATION SYMBOL SHALL BE PLACED ON ALL ELECTRICAL MATERIALS, APPARATUS, DEVICES, APPLIANCES, FIXTURES, AND EQUIPMENT USED OR INSTALLED UNDER THE PROVISIONS OF THIS CODE. ALL ELECTRICAL MATERIALS AND EQUIPMENT SHALL BE LISTED AND LABELED FOR THE INTENDED USE AND SHALL BE INCLUDED IN A LIST PUBLISHED BY AN APPROVAL AGENCY.

PUMP STATION ELECTRICAL LOAD ANALYSIS		
LOAD DESCRIPTION	CONNECTED KVA	DEMAND KVA
PUMP NO.1 (25HP)	27.4	27.4
PUMP NO.2 (25HP)	27.4	27.4
PUMP NO.3 (25HP) (STANDBY)	27.4	--
LIGHTING @ 125%	0.4	0.5
RECEPTACLE @ 180 VA	0.5	0.5
MISC	2.5	2.5
25% OF LARGEST MOTOR LOAD		6.9
TOTAL CALCULATED LOAD		65.2
65.2KVA @ 480V/3ϕ = 78.4A		
200A SERVICE EXCEEDS NEC REQUIREMENTS		

1/16" THICK PHENOLIC NAMEPLATE-RED WITH WHITE LETTERS. CENTER ENGRAVING AND ANCHOR TO ENCLOSURE WITH 316 SS SELF TAPPING SCREWS. APPLY SILICON SEALER INSIDE DOOR AT SCREW PENETRATION TO SEAL SCREWS.

ELECTRICAL WARNING NAMEPLATE N-EW ENGRAVING

NO.	DATE	REVISION	APP.

FOR INTERIM REVIEW ONLY NOT INTENDED FOR PERMIT, BIDDING OR CONSTRUCTION PURPOSES.
ENGINEER:
HOSS FOROUZAN
P.E. SERIAL NO.77748
05/18/2026

GAI
Gupta & Associates, Inc.
CONSULTING ENGINEERING
Registration No. F-2593
302 Dennis St.,
Houston, Texas 77006
Tel: 713-636-2936
Fax: 713-636-2987
email: hforouzan@gaiconsulting.com

IDS Engineering Group
13430 NW. Freeway
Suite 700
Houston, Tx. 77040
713.462.3178
TxEng Firm 2726
TxSurv Firm 10110700

CITY OF HOUSTON
HOUSTON PUBLIC WORKS

LIFT STATION RENEWAL AND REPLACEMENT FY 2023

SOUTHPOINT LIFT STATION SINGLE LINE DIAGRAM

WBS NUMBER	FOR CITY OF HOUSTON USE ONLY
R-000267-0179-4	
DRAWING SCALE	
HORIZ: NONE VERT: NONE	
CITY OF HOUSTON PM	
NAWARAJ PANTA, P.E.	
SHEET NO. 92 OF 361	

DWG. NO. SPT-E-03

IDS JOB No. 0057-085-00

FILE PATH: O:\H8108_Lift Station Rehabilitation And Reconstruction (IDS)\6 Drawings\Electrical\Working\South Point\H8108_SPT-E-03.dwg

PLOTTED: 5/12/2026 8:45 PM

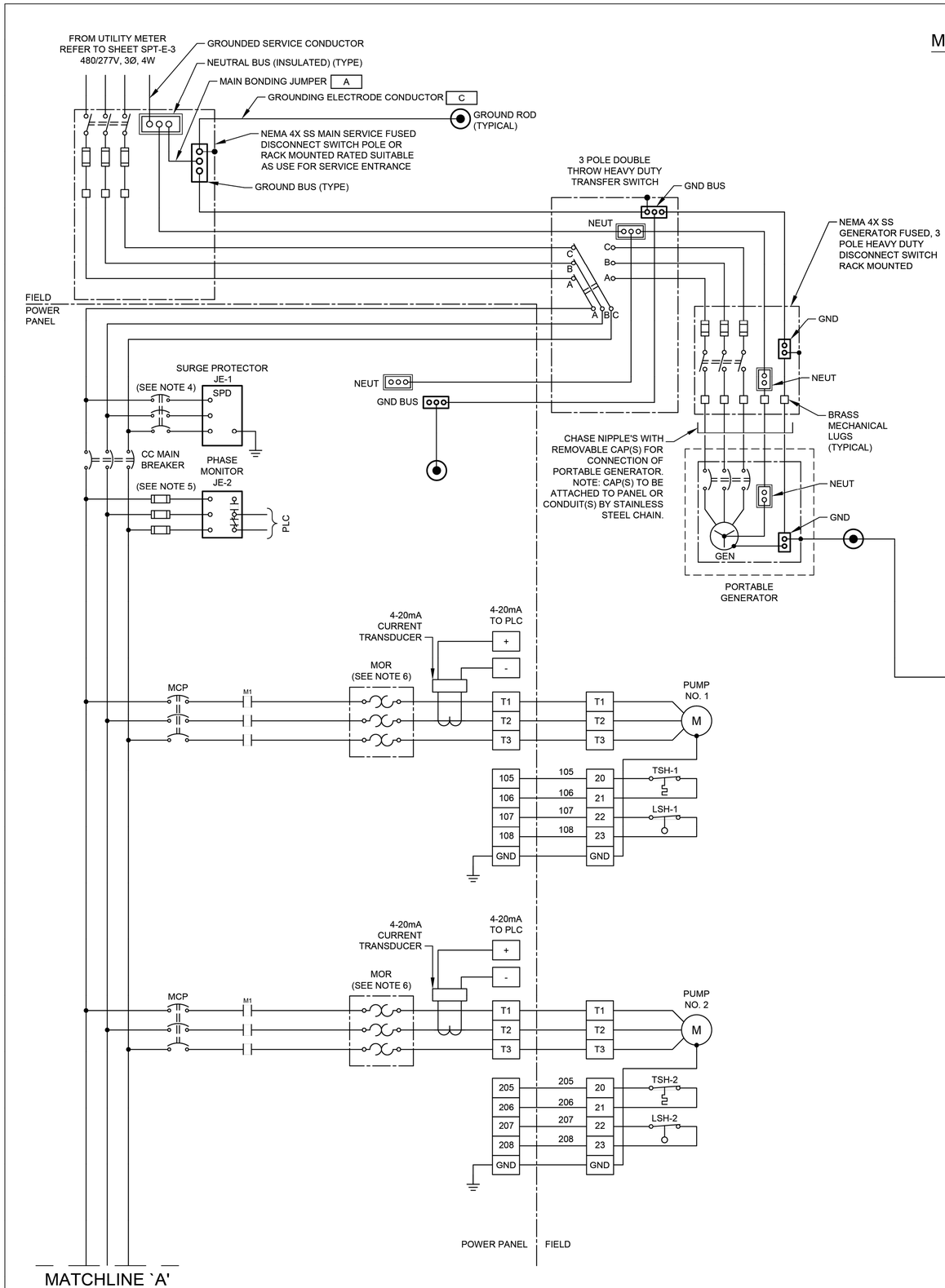

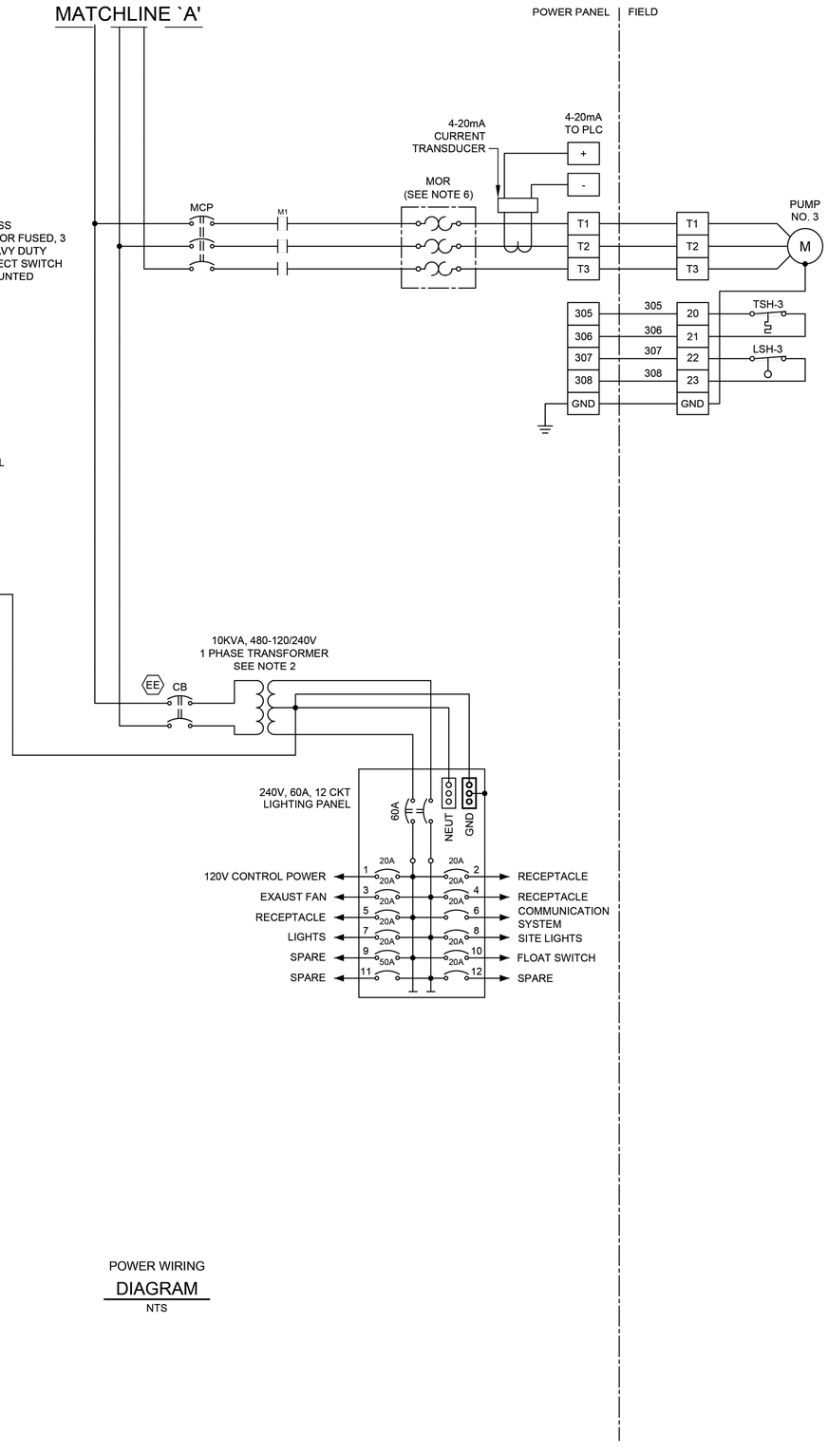

POWER WIRING
DIAGRAM
NTS

NOTES:

1. UNLESS OTHERWISE INDICATE, ALL DEVICES WITHOUT FURTHER DESIGNATION ARE LOCATED AT THE CONTROL PANEL.
2. CONTRACTOR TO REVISE DWG. BASED ON MANUFACTURER AND SIZE.
3. CONTRACTOR SHALL TERMINATE POWER & CONTROL WIRES PER MANUFACTURER'S REQUIREMENTS.
4. PROVIDE BREAKER SIZE ACCORDING TO MANUFACTURER'S REQUIREMENTS.
5. PROVIDE FUSE SIZE ACCORDING TO MANUFACTURER'S REQUIREMENTS.
6. THE COMBINATION OF CT AND MOTOR OVERLOAD RELAY IF REQUIRED.

NO.	DATE	REVISION	APP.

FOR INTERIM REVIEW
ONLY NOT INTENDED FOR
PERMIT, BIDDING OR
CONSTRUCTION PURPOSES.
ENGINEER:
HOSS FOROUZAN
P.E. SERIAL NO.77748
05/18/2026

GAI
Gupta & Associates, Inc.
CONSULTING ENGINEERING
Registration No. F-2593
302 Dennis St.,
Houston, Texas 77006
Tel: 713-636-2936
Fax: 713-636-2987
email: hforouzan@gaiconsulting.com

IDS Engineering Group
13430 NW. Freeway
Suite 700
Houston, Tx. 77040
713.462.3178
TxEng Firm 2726
TxSurv Firm 10110700

CITY OF HOUSTON
HOUSTON PUBLIC WORKS

LIFT STATION RENEWAL AND REPLACEMENT FY 2023

SOUTHPOINT LIFT STATION THREE-LINE DIAGRAM

WBS NUMBER	FOR CITY OF HOUSTON USE ONLY
R-000267-0179-4	
DRAWING SCALE	
HORIZ: NONE VERT: NONE	
CITY OF HOUSTON PM	
NAWARAJ PANTA, P.E.	
SHEET NO. 93 OF 361	

DWG. NO. SPT-E-04

IDS JOB No. 0057-085-00

FILE PATH: O:\H8108_Lift Station Rehabilitation And Reconstruction (IDS)\6 Drawings\Electrical\Working\South Point\H8108_SPT-E-04.dwg

PLOTTED: 5/12/2026 8:45 PM

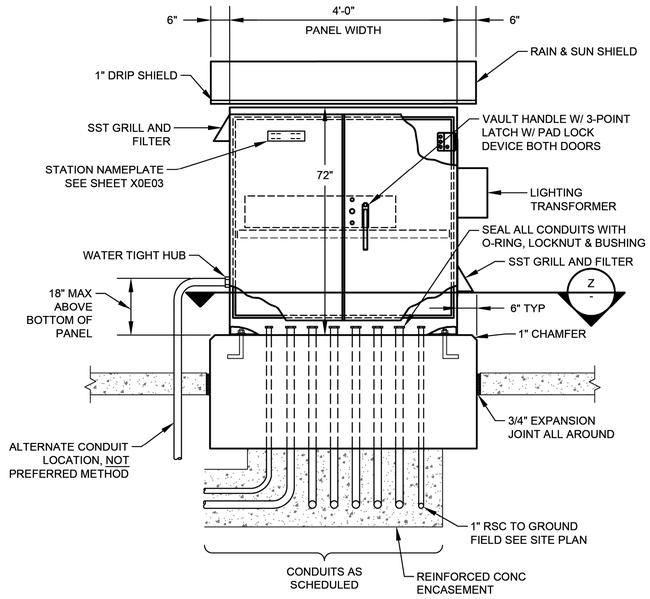

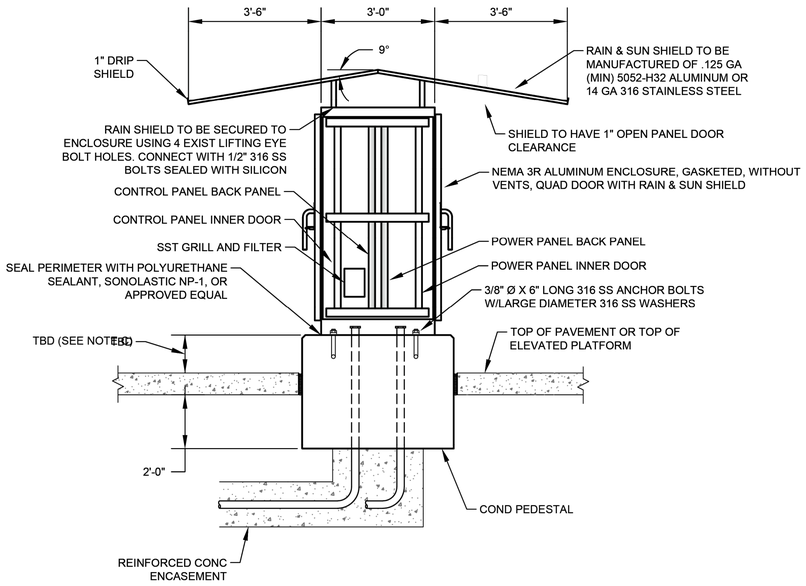

CONTROL CABINET ENCLOSURE WITH CONCRETE PEDESTAL FOUNDATION

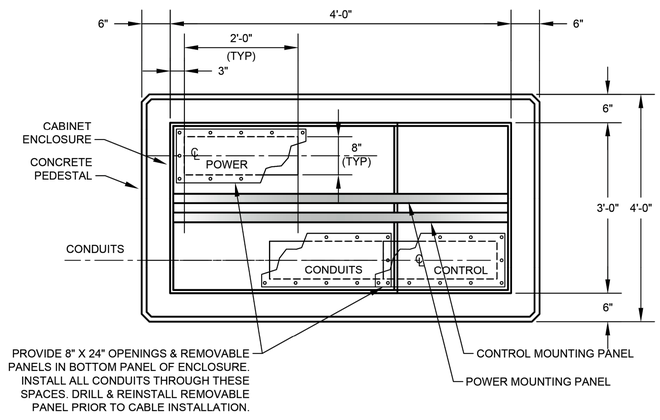

SECTION Z
NTS

NOTES:

1. SEE SHEET SPT-I-4 FOR EQUIPMENT SCHEDULE.
2. REFER TO SPEC 13325-8 FOR PANEL DIMENSIONS.
3. EXPANSION JOINT FITTINGS AS REQUIRED.

NO.	DATE	REVISION	APP.

FOR INTERIM REVIEW
ONLY NOT INTENDED FOR
PERMIT, BIDDING OR
CONSTRUCTION PURPOSES.
ENGINEER:
HOSS FOROUZAN
P.E. SERIAL NO.77748
05/18/2026

GAI
Gupta & Associates, Inc.
CONSULTING ENGINEERING
Registration No. F-2593
302 Dennis St.,
Houston, Texas 77006
Tel: 713-636-2936
Fax: 713-636-2987
email: hforouzan@gaiconsulting.com

IDS Engineering Group
13430 NW. Freeway
Suite 700
Houston, Tx. 77040
713.462.3178
TxEng Firm 2726
TxSurv Firm 10110700

CITY OF HOUSTON
HOUSTON PUBLIC WORKS

LIFT STATION RENEWAL
AND REPLACEMENT FY 2023

SOUTHPOINT LIFT STATION
CONTROL CABINET DETAIL

WBS NUMBER	FOR CITY OF HOUSTON USE ONLY
R-000267-0179-4	
DRAWING SCALE	
HORIZ: NTS VERT: NTS	
CITY OF HOUSTON PM	
NAWARAJ PANTA, P.E.	
SHEET NO. 94 OF 361	

DWG. NO. SPT-E-05

IDS JOB No. 0057-085-00

FILE PATH: O:\H8108_Lift Station Rehabilitation And Reconstruction (IDS)\6 Drawings\Electrical\Working\South Point\H8108_SPT-E-05.dwg

PLOTTED: 5/12/2026 8:45 PM

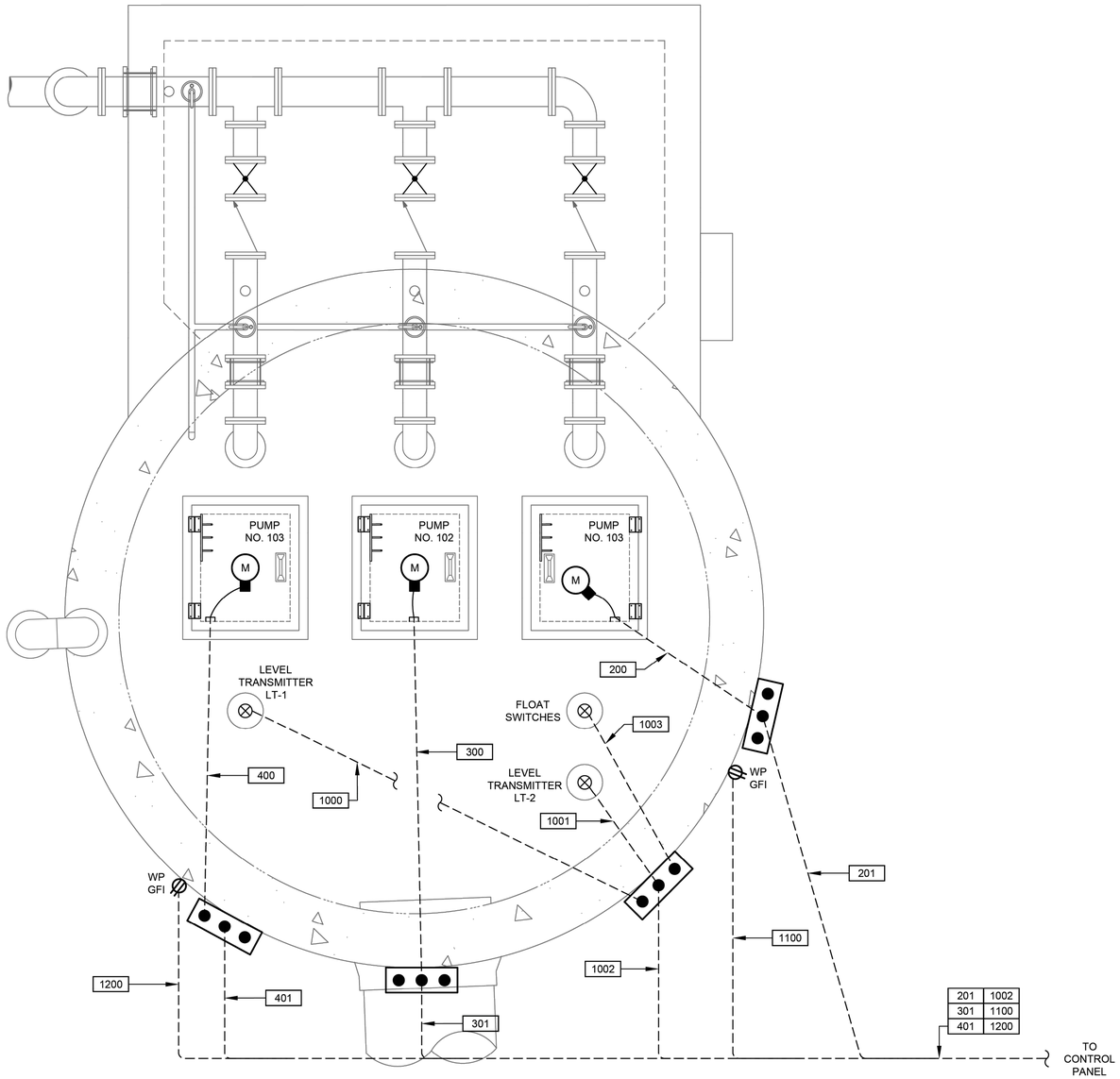

201	1002
301	1100
401	1200

SOUTHPOINT LIFT STATION
ENLARGED ELECTRICAL PLAN

PLAN

1/2"= 1'-0"

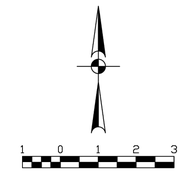

NO.	DATE	REVISION	APP.

FOR INTERIM REVIEW
ONLY NOT INTENDED FOR
PERMIT, BIDDING OR
CONSTRUCTION PURPOSES.
ENGINEER:
HOSS FOROUZAN
P.E. SERIAL NO.77748
05/18/2026

GAI
Gupta & Associates, Inc.
CONSULTING ENGINEERING
Registration No. F-2593
302 Dennis St.,
Houston, Texas 77006
Tel: 713-636-2936
Fax: 713-636-2987
email: hforouzan@gaiconsulting.com

IDS Engineering Group
13430 NW. Freeway
Suite 700
Houston, Tx. 77040
713.462.3178
TxEng Firm 2726
TxSurv Firm 10110700

CITY OF HOUSTON
HOUSTON PUBLIC WORKS

LIFT STATION RENEWAL
AND REPLACEMENT FY 2023

SOUTHPOINT LIFT STATION ENLARGED ELECTRICAL PLAN

WBS NUMBER	FOR CITY OF HOUSTON USE ONLY
R-000267-0179-4	
DRAWING SCALE	
HORIZ. 1/2"=1'-0" VERT. 1/2"=1'-0"	
CITY OF HOUSTON PM	
NAWARAJ PANTA, P.E.	
SHEET NO. 95 OF 361	

DWG. NO.
SPT-E-06

IDS JOB No. 0057-085-00

FILE PATH: O:\H8108_Lift Station Rehabilitation And Reconstruction (IDS)\6 Drawings\Electrical\Working\South Point\H8108_SPT-E-06.dwg

PLOTTED: 5/12/2026 8:45 PM

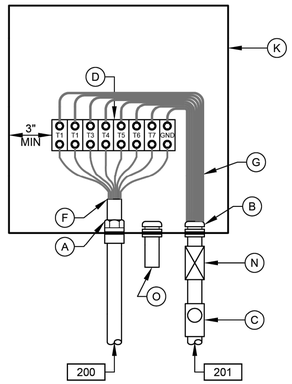

PUMP NO.1
JUNCTION BOX

DETAIL 3
NTS
(SEE NOTE 7)

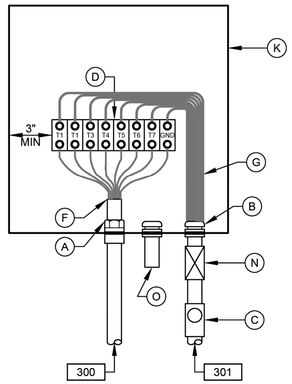

PUMP NO.2
JUNCTION BOX

DETAIL 4
NTS
(SEE NOTE 7)

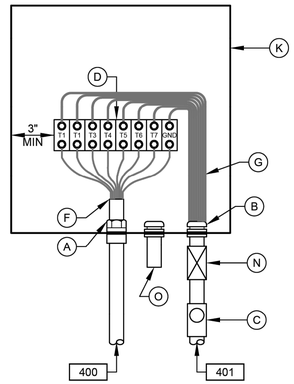

PUMP NO.3
JUNCTION BOX

DETAIL 5
NTS
(SEE NOTE 7)

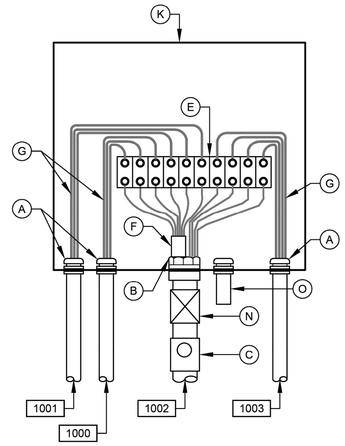

LEVEL TRANSMITTER
JUNCTION BOX

DETAIL 6
NTS
(SEE NOTE 7)

NOTES:

1. NAMEPLATES SHALL BE MOUNTED TO JUNCTION BOXES USING 316 STAINLESS STEEL HARDWARE.
2. MAINTAIN MINIMUM SEPARATION REQUIRED UNDER NEC ARTICLE 504, BETWEEN INTRINSICALLY SAFE CONTROL WIRING AND NON INTRINSICALLY SAFE MOTOR FEEDER WIRING.
3. UNLESS OTHERWISE NOTED, ALL EXTERIOR EXPOSED CONDUITS SHALL BE PVC COATED ALUMINUM.
4. UNLESS OTHERWISE NOTED, ALL NUTS, BOLTS, SCREWS WASHERS, ETC SHALL BE TYPE 316 STAINLESS STEEL.
5. ALL UNDERGROUND CONDUITS TO BE ENCASED IN REINFORCED CONCRETE DUCTBANK.
6. PROVIDE ANTI-CORROSIVE SPRAY ON ANY BARE METAL PARTS OR EXPOSED WIRE.
7. SEE WIRING SCHEMATICS FOR TERMINALS AND WIRE NUMBERS.
8. ANY CONDUIT REQUIRING A CSBE SEAL, SHALL BE A MINIMUM SIZE OF 2 1/2" PER CABLE.
9. DETAIL SHOWN MAY BE MODIFIED PER SITE SITUATION.
10. COORDINATE WITH WASTE WATER OPERATIONS ELECTRICAL ORGANIZATION FOR THE OPENING OF JUNCTION BOXES TO THE SIDE OF WET WELL IF REQUIRED DURING CONSTRUCTION.
11. THE ENCLOSURES WITH ELECTRICAL CIRCUITS SHALL BE A MINIMUM OF 5 FEET FROM ANY CLASSIFIED AREA, OTHERWISE EXPLOSION PROOF TYPE ENCLOSURES SHALL BE USED.
12. THE RECEPTACLES SHALL BE EXPLOSION PROOF TYPE IF INSTALLED WITHIN 5 FEET OF CLASSIFIED AREA, SHALL BE FIELD VERIFIED.

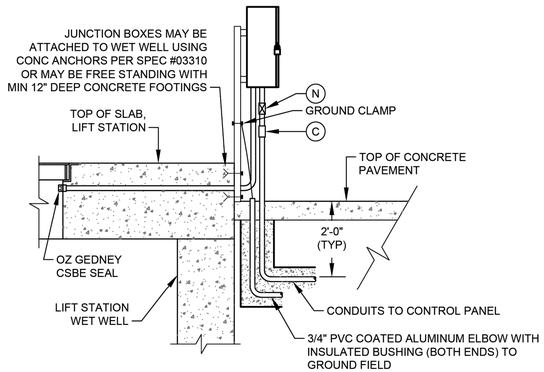

TYP SIDE VIEW FOR DETAIL 1, 1A, 2, & 2A

(SEE NOTE 10)

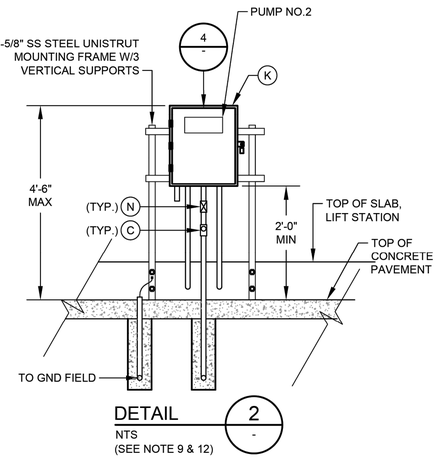

DETAIL 2
NTS
(SEE NOTE 9 & 12)

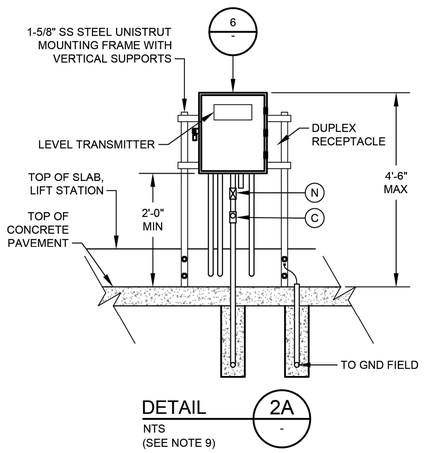

DETAIL 2A
NTS
(SEE NOTE 9)

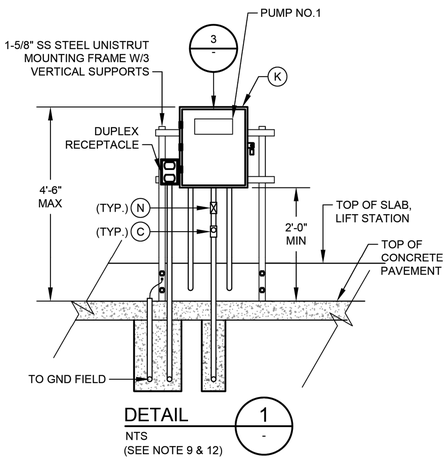

DETAIL 1
NTS
(SEE NOTE 9 & 12)

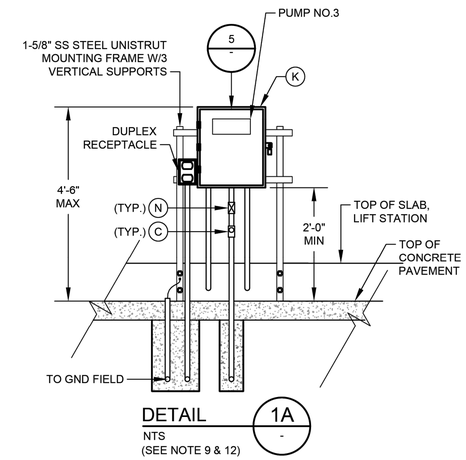

DETAIL 1A
NTS
(SEE NOTE 9 & 12)

JUNCTION BOX EQUIPMENT SCHEDULE

- A - OZ GEDNEY CSBE SEAL
- B - WATERTIGHT CONDUIT HUB WITH INSULATED BUSHING
- C - CLASS I, DIV 1, EXPLOSION PROOF SEAL INSTALLED PER NEC DIV 501
- D - POWER TERMINAL BLOCK W/SCREW DOWN BOX LUGS
- E - CONTROL TERM BLOCK W/SCREW DOWN BOX LUGS
- F - MULTI-CONDUCTOR CABLE, REMOVE OUTER JACKET AS SHOWN
- G - WIRING AS SCHEDULED
- H - WIRING HARNESS PERMANENTLY AFFIXED
- I - PUMP CONTROL WIRING FROM PUMP 1 & 2
- J - 1-1/2" PVC COATED CONDUIT NIPPLE
- K - NEMA 4X STAINLESS STEEL JUNCTION BOX WITH GASKETED FRONT COVER, SINGLE QUARTER TURN, OIL-TIGHT LATCH AND PADLOCKING PROVISIONS, MINIMUM SIZE: 12"W X 16"H X 6"D
- L - NAMEPLATE, SEE SPECIFICATIONES (SEE NAMEPLATE SCHEDULE)
- M - NOT USED.
- N - EXPANSION FITTING
- O - DRAIN VENT

NO.	DATE	REVISION	APP.

FOR INTERIM REVIEW ONLY NOT INTENDED FOR PERMIT, BIDDING OR CONSTRUCTION PURPOSES.
ENGINEER:
HOSS FOROUZAN
P.E. SERIAL NO.77748
05/18/2026

GAI
Gupta & Associates, Inc.
CONSULTING ENGINEERING
Registration No. F-2593
302 Dennis St.,
Houston, Texas 77006
Tel: 713-636-2936
Fax: 713-636-2987
email: hforouzan@gaiconsulting.com

IDS Engineering Group
13430 NW. Freeway
Suite 700
Houston, Tx. 77040
713.462.3178
TxEng Firm 2726
TxSurv Firm 10110700

CITY OF HOUSTON
HOUSTON PUBLIC WORKS

LIFT STATION RENEWAL AND REPLACEMENT FY 2023

SOUTHPOINT LIFT STATION JUNCTION BOX DETAILS

WBS NUMBER	FOR CITY OF HOUSTON USE ONLY
R-000267-0179-4	
DRAWING SCALE	
HORIZ: NTS VERT: NTS	
CITY OF HOUSTON PM	
NAWARAJ PANTA, P.E.	
DWG. NO. SPT-E-07	SHEET NO. 96 OF 361

IDS JOB No. 0057-085-00

FILE PATH: O:\H8108_Lift Station Rehabilitation And Reconstruction (IDS)\6 Drawings\Electrical\Working\South Point\H8108_SPT-E-07.dwg

PLOTTED: 5/12/2026 8:46 PM

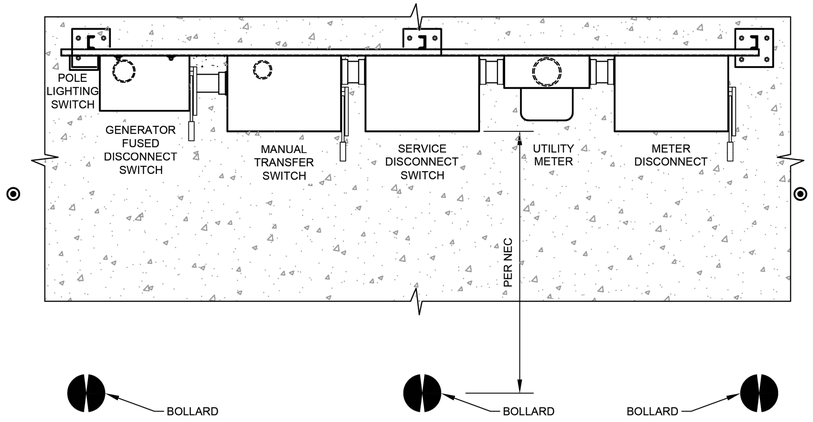

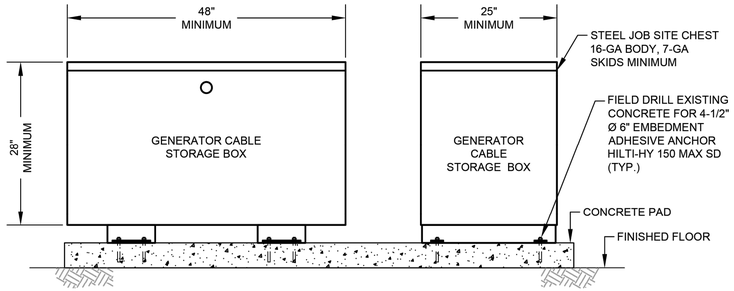

GENERATOR CABLE STORAGE BOX SIDE VIEW

DETAIL 20 NTS.

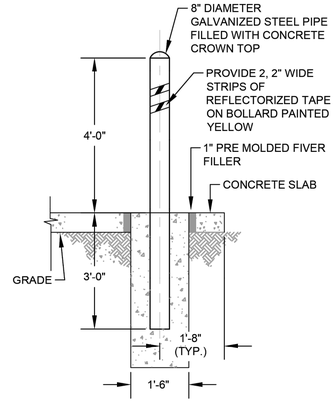

BOLLARD DETAIL

DETAIL 21 NTS.

ALLOWABLE DEVICE AMPACITY CHART DLO RHW-2 CAM-LOK CONNECTOR CABLE		
CABLE SIZE AWG	AMPS	CABLE LENGTH
#1	220	65 FEET
4/0	400	65 FEET

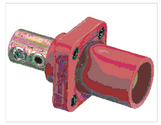

QUICK CONNECT FOR GENRATOR

PHOTOGRAPH 1 NTS.

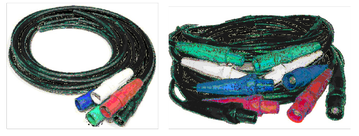

QUICK CONNECT FOR GENRATOR

PHOTOGRAPH 2 NTS.

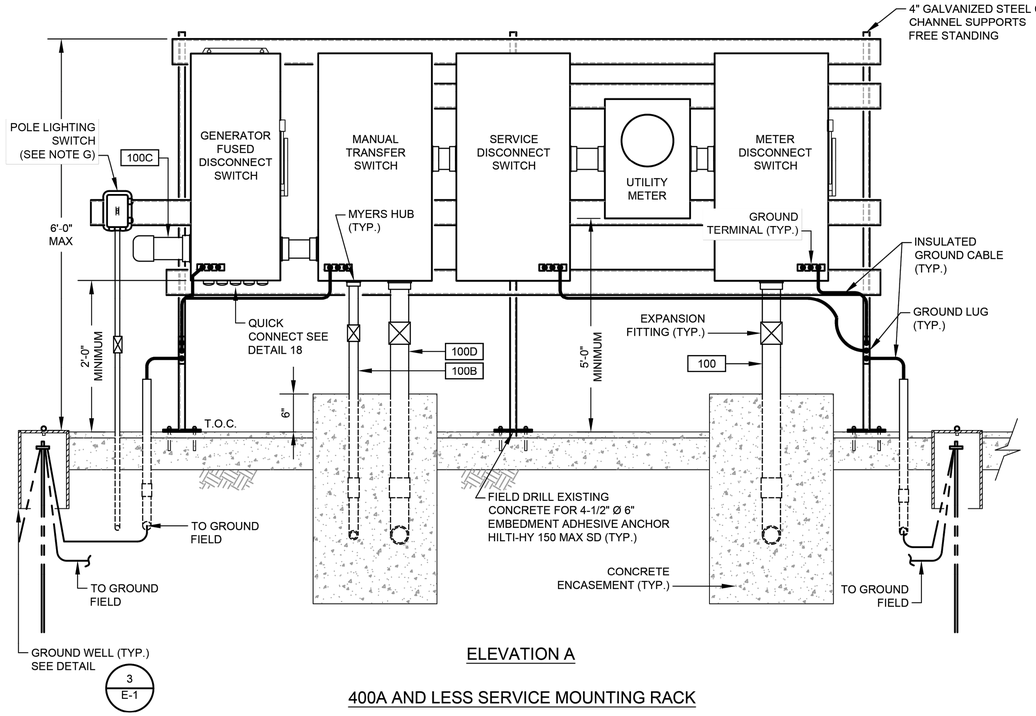

ELEVATION A

400A AND LESS SERVICE MOUNTING RACK

DETAIL 17 NTS.

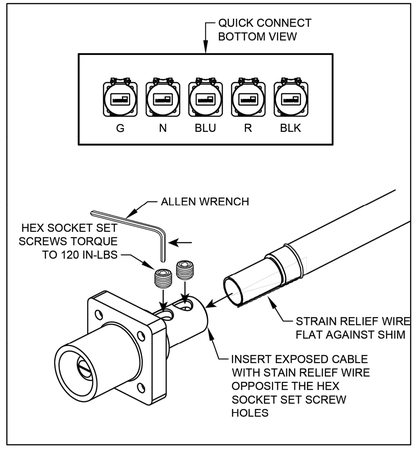

400A AND LESS FEMALE PLUG CABLE TERMINATION

DETAIL 18 NTS.

REFER TO PHOTO NO.1

NOTES:

1. CONTRACTOR TO INSTALL CONNECTORS AT BOTH ENDS OF CABLE.

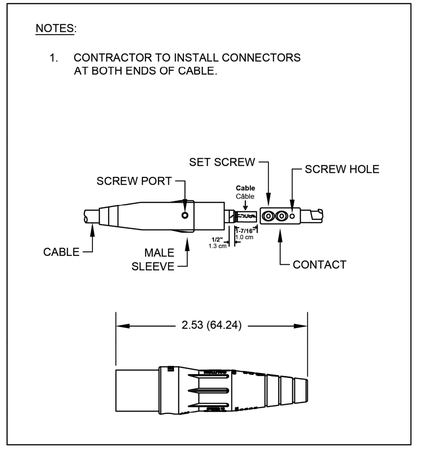

400A AND LESS MALE PLUG CABLE TERMINATION

DETAIL 19 NTS.

REFER TO PHOTO NO.2

NOTES:

1. CHASE NIPPLE(S) WITH REMOVABLE CAP(S) FOR CONNECTION OF PORTABLE GENERATOR. NOTE: CAP(S) TO BE ATTACHED TO PANEL OR CONDUIT(S) BY STAINLESS STEEL CHAIN.
2. T.O.C DEFINED AS TOP OF PAVEMENT OR TOP OF PANEL ENCLOSURE PEDESTAL WHICHEVER IS HIGHER. (SEE NOTE B).
3. PROVIDE CENTER BOLLARD WHEN SPACE BETWEEN OUTSIDE BOLLARDS IS GREATER THEN 4'-0".
4. CONTRACTOR SHALL COORDINATE THE LOCATION OF STORAGE BOX WITH COH WASTEWATER MAINTENANCE STAFF DURING CONSTRUCTION.

NO.	DATE	REVISION	APP.

FOR INTERIM REVIEW
ONLY NOT INTENDED FOR
PERMIT, BIDDING OR
CONSTRUCTION PURPOSES.
ENGINEER:
HOSS FOROUZAN
P.E. SERIAL NO.77748
05/18/2026

GAI
Gupta & Associates, Inc.
CONSULTING ENGINEERING
Registration No. F-2593
302 Dennis St.,
Houston, Texas 77006
Tel: 713-636-2936
Fax: 713-636-2987
email: hforouzan@gaiconsulting.com

IDS Engineering Group
13430 NW. Freeway
Suite 700
Houston, Tx. 77040
713.462.3178
TxEng Firm 2726
TxSurv Firm 10110700

CITY OF HOUSTON
HOUSTON PUBLIC WORKS

LIFT STATION RENEWAL AND REPLACEMENT FY 2023

SOUTHPOINT LIFT STATION SERVICE RACK DETAIL

WBS NUMBER	FOR CITY OF HOUSTON USE ONLY
R-000267-0179-4	
DRAWING SCALE	
HORIZ: NTS VERT: NTS	
CITY OF HOUSTON PM	
NAWARAJ PANTA, P.E.	
SHEET NO. 97 OF 361	

DWG. NO. SPT-E-08

FILE PATH: O:\H8108_Lift Station Rehabilitation And Reconstruction (IDS)\6 Drawings\Electrical\Working\South Point\H8108_SPT-E-08.dwg

IDS JOB No. 0057-085-00

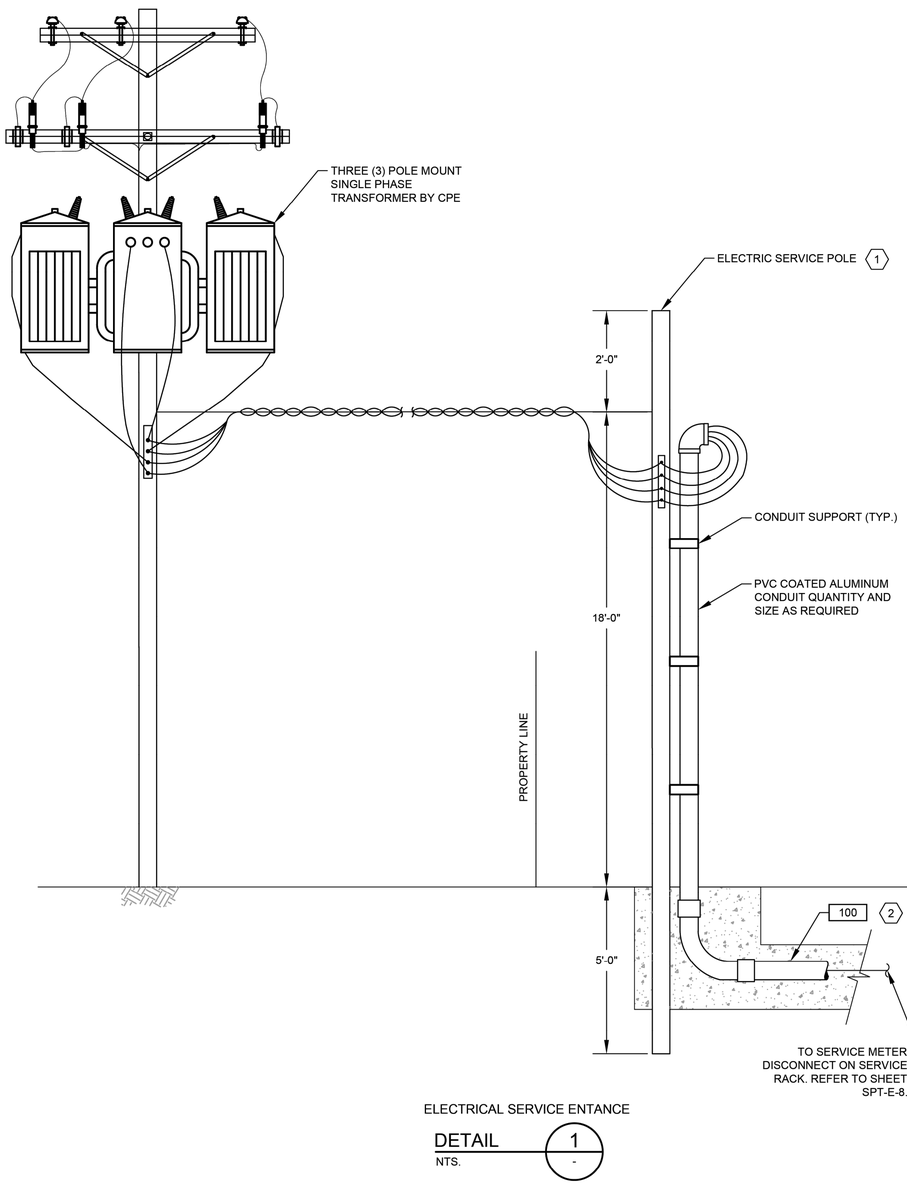

ELECTRICAL SERVICE ENTANCE

DETAIL 1 / NTS. -

NOTES BY SYMBOL "⟨#⟩":

⟨1⟩ WOODEN POLE 20' LONG. TOP DIAMETER 6" BOTTOM DIAMETER 8" PROVIDED AND INSTALLED BY ELECTRICAL CONTRACTOR.

⟨2⟩ ELECTRICAL SERVICE FEEDER PROVIDED AND INSTALLED BY ELECTRICAL CONTRACTOR. COORDINATE WITH CPE FOR THE REQUIREMENTS OF THE INSTALLATION.

NO.	DATE	REVISION	APP.

FOR INTERIM REVIEW
ONLY NOT INTENDED FOR
PERMIT, BIDDING OR
CONSTRUCTION PURPOSES.
ENGINEER:
HOSS FOROUZAN
P.E. SERIAL NO.77748
05/18/2026

GAI
Gupta & Associates, Inc.
CONSULTING ENGINEERING
Registration No. F-2593
302 Dennis St.,
Houston, Texas 77006
Tel: 713-636-2936
Fax: 713-636-2987
email: hforouzan@gaiconsulting.com

IDS Engineering Group
13430 NW. Freeway
Suite 700
Houston, Tx. 77040
713.462.3178
TxEng Firm 2726
TxSurv Firm 10110700

CITY OF HOUSTON
HOUSTON PUBLIC WORKS

LIFT STATION RENEWAL
AND REPLACEMENT FY 2023

SOUTHPOINT LIFT STATION SERVICE POLE DETAIL

WBS NUMBER	FOR CITY OF HOUSTON USE ONLY
R-000267-0179-4	
DRAWING SCALE	
HORIZ: NTS VERT: NTS	
CITY OF HOUSTON PM	
NAWARAJ PANTA, P.E.	
SHEET NO. 98 OF 361	

DWG. NO. SPT-E-09

IDS JOB No. 0057-085-00

PLOTTED: 5/12/2026 8:46 PM
FILE PATH: O:\H8108_Lift Station Rehabilitation And Reconstruction (IDS)\6 Drawings\Electrical\Working\South Point\H8108_SPT-E-09.dwg

	DESCRIPTION	SERVICE		ROUTING			CONDUIT & WIRE SIZE
		VOLTAGE	AMPS OR HP	FROM	TO	VIA	
A	MAIN BONDING JUMPER	--	--	MAIN FUSED DISCONNECT NEUTRAL	MAIN FUSED DISCONNECT GROUND	--	#6 CU GND.
B	EQUIPMENT BONDING JUMPER	--	--	MCC/POWER PANEL ENCLOSURE	POWER/CONTROL PANEL & EQUIPMENT	--	#6 CU GND.
C	GROUNDED ELECTRODE CONDUCTOR	--	--	GROUNDING ELECTRODE	MAIN SERVICE FUSED DISCONNECT GROUNDING	--	#6 CU GND.
100	SERVICE ENTRANCE	480V	200A	UTILITY POWER SERVICE	METER DISCONNECT		4#3/0 AWG., #4 GND., 2-1/2" C.
100A	SERVICE POWER	480V	200A	SERVICE DISCONNECT	MTS	--	4#3/0 AWG., #4 GND., 2-1/2" C.
100B	NORMAL/EMERGENCY POWER	24VDC	--	MTS	CONTROL PANEL	--	4 #14 AWG., 1"C.
100C	EMERGENCY POWER	480V	200A	GENERATOR DISCONNECT	POTABLE GENERATOR	CAPPED CONDUITS	--
100D	MCC POWER	480V	--	MTS	CONTROL PANEL	--	4#3/0 AWG., #4 GND., 2-1/2" C.
101	GROUND ELECTRODE CONDUCTOR	--	--	POWER PANEL	GROUND FIELD	--	#6 CU GND.
104	GROUND ELECTRODE CONDUCTOR	--	--	CONTROL PANEL	GROUND FIELD	--	#6 CU GND.
105	COMMUNICATION	--	--	COMMUNICATION POLE	CONTROL PANEL	--	1-1/2"C. CAT-5E
200	PUMP NO. 1 POWER	480V	30 HP	PUMP NO. 1	PUMP NO. 1 JUNCTION BOX	--	MANUFACTURER CABLE IN 3-1/2"C.
201	PUMP NO. 1 CONTROLS	120V	--	PUMP NO. 1	PUMP NO. 1 JUNCTION BOX	--	MANUFACTURER CABLE IN 3-1/2"C.
202	PUMP NO. 1 POWER	480V	30 HP	PUMP NO. 1 JUNCTION BOX	PUMP STARTER	--	3#6 AWG., 4#14 AWG., #8 GND., 1-1/2"C.
203	COMBINED PUMP CONTROLS	120V	--	PUMP NO. 1 JUNCTION BOX	PUMP STARTER	COMBINE PUMP 1 & 2 CONTROLS	COMBINE 200 & 300 TAG WIRING, 8#14, 1"C.
205	PUMP NO. 1 CONTROLS	120V	--	STARTER IN MOTOR CONTROL CENTER	CONTROL PANEL	--	12#14 AWG., 3/4"C.
300	PUMP NO. 2 POWER	480V	30 HP	PUMP NO. 2	PUMP NO. 2 JUNCTION BOX	--	MANUFACTURER CABLE IN 3-1/2"C.
301	PUMP NO. 2 CONTROLS	120V	--	PUMP NO. 2	PUMP NO. 2 JUNCTION BOX	--	MANUFACTURER CABLE IN 3-1/2"C.
302	PUMP NO. 2 POWER	480V	30 HP	PUMP NO. 2 JUNCTION BOX	PUMP STARTER	--	3#6 AWG., 4#14 AWG., #8 GND., 1-1/2"C.
305	PUMP NO. 2 CONTROLS	120V	--	STARTER IN MOTOR CONTROL CENTER	CONTROL PANEL	--	12#14 AWG., 3/4"C.
400	PUMP NO. 3 POWER	480V	30 HP	PUMP NO. 3	PUMP NO. 3 JUNCTION BOX	--	MANUFACTURER CABLE IN 3-1/2"C.
401	PUMP NO. 3 CONTROLS	120V	--	PUMP NO. 3	PUMP NO. 3 JUNCTION BOX	--	MANUFACTURER CABLE IN 3-1/2"C.
402	PUMP NO. 3 POWER	480V	30 HP	PUMP NO. 3 JUNCTION BOX	PUMP STARTER	--	3#6 AWG., 4#14 AWG., #8 GND., 1-1/2"C.
403	COMBINED PUMP CONTROLS	120V	-	PUMP NO. 3 JUNCTION BOX	CONTROL PANEL	--	4#14 AWG., 1"C.
405	PUMP NO. 3 CONTROLS	120V	--	STARTER IN MOTOR CONTROL CENTER	CONTROL PANEL	--	12#14 AWG., 1"C.
600	LIGHTING PANEL FEEDER	480V	40A	MOTOR CONTROL CENTER	LIGHTING TRANSFORMER	--	2#6 AWG., #6 GND., 1"C.
601	LIGHTING PANEL FEEDER	120/240V	--	LIGHTING TRANSFORMER	LIGHTING PANEL	--	3#4 AWG., #6 GND., 1-1/4" C.
1000	LEVEL TRANSMITTER	24VDC	--	TRANSMITTER JUNCTION BOX	TRANSMITTER JUNCTION BOX	--	MANUFACTURER'S CABLE IN 2-1/2"C
1001	LEVEL TRANSMITTER	24VDC	--	TRANSMITTER JUNCTION BOX	TRANSMITTER JUNCTION BOX	--	MANUFACTURER'S CABLE IN 2-1/2"C
1002	COMBINED LEVEL TRANSMITTERS & FLOAT SWITCH	24VDC	--	CONTROL PANEL	TRANSMITTER JUNCTION BOX	--	2-TRI, 4#14, 2" C.
1003	WELL FLOAT SWITCHES	24VDC	--	TRANSMITTER JUNCTION BOX	FLOAT SWITCH NO.1 & NO.2	--	MANUFACTURER'S CABLE IN 2-1/2"C
1100	120VAC FOR RECEPTACLE	-	--	LIGHTING PANEL	RECEPTACLE NEXT TO TRANSMITTER J-BOX	--	2#12 AWG., #12 GND., 1" C.
1200	120VAC FOR RECEPTACLE	-	--	LIGHTING PANEL	RECEPTACLE NEXT TO PUMP NO.2 J-BOX	--	2#12 AWG., #12 GND., 1" C.
1300	SITE LIGHTING	120VAC	--	LIGHTING PANEL	SITE LIGHTS	--	2#12 AWG., #12 GND., 1" C.

NO.	DATE	REVISION	APP.

FOR INTERIM REVIEW
ONLY NOT INTENDED FOR
PERMIT, BIDDING OR
CONSTRUCTION PURPOSES.
ENGINEER:
HOSS FOROUZAN
P.E. SERIAL NO.77748
05/18/2026

GAI
Gupta & Associates, Inc.
CONSULTING ENGINEERING
Registration No. F-2593
302 Dennis St.,
Houston, Texas 77006
Tel: 713-636-2936
Fax: 713-636-2987
email: hforouzan@gaiconsulting.com

IDS Engineering Group
13430 NW. Freeway
Suite 700
Houston, Tx. 77040
713.462.3178
TxEng Firm 2726
TxSurv Firm 10110700

CITY OF HOUSTON
HOUSTON PUBLIC WORKS

LIFT STATION RENEWAL
AND REPLACEMENT FY 2023

SOUTHPOINT LIFT STATION CONDUIT SCHEDULE

WBS NUMBER	FOR CITY OF HOUSTON USE ONLY
R-000267-0179-4	
DRAWING SCALE	
HORIZ: NONE VERT: NONE	
CITY OF HOUSTON PM	
NAWARAJ PANTA, P.E.	
SHEET NO. 99 OF 361	

DWG. NO.
SPT-E-10

IDS JOB No. 0057-085-00

PLOTTED: 5/12/2026 8:46 PM

FILE PATH: O:\H8108_Lift Station Rehabilitation And Reconstruction (IDS)\6 Drawings\Electrical\Working\South Point\H8108_SPT-E-10.dwg

PLOTTED: 5/12/2026 9:03 PM

HMI

CONTROL PANEL PLC

CONTROL PANEL

	INFLUENT PUMP NO. 1									INFLUENT PUMP NO. 2									INFLUENT PUMP NO. 3									PRIMARY PLC		BACKUP PLC		
	SEAL FAIL ALARM	MOTOR OVERLOAD ALARM	MOTOR CURRENT	HIGH TEMP ALARM	IN HAND	IN AUTO	ON/OFF	START/ STOP		SEAL FAIL ALARM	MOTOR OVERLOAD ALARM	MOTOR CURRENT	HIGH TEMP ALARM	IN HAND	IN AUTO	ON/OFF	START/ STOP		SEAL FAIL ALARM	MOTOR OVERLOAD ALARM	MOTOR CURRENT	HIGH TEMP ALARM	IN HAND	IN AUTO	ON/OFF	START/ STOP		ALARMS RESET	FLOAT HIGH-HIGH WETWELL LEVEL	PUMP NO. 1 START/ STOP	PUMP NO. 2 START/ STOP	PUMP NO. 3 START/ STOP
HMI	MA 1	MO 1	II 1	TH 1	HI 1	IA 1	YFS 1	YCS 1		MA 2	MO 2	II 2	TH 2	HI 2	IA 2	YFS 2	YCS 2		MA 3	MO 3	II 3	TH 3	HI 3	IA 3	YFS 3	YCS 3		RE 1	LAHH 1A	YCS 1A	YCS 2A	YCS 3A
CONTROL PANEL PLC	▲	▲	▲	▲	▲	▲	▲	▽		▲	▲	▲	▲	▲	▲	▲	▽		▲	▲	▲	▲	▲	▲	▲	▽		▲	▲	▽	▽	▽

480V

CONTROL PANEL: INFLUENT PUMP NO. 1 (H/O/A, RUN); INFLUENT PUMP NO. 2 (H/O/A, RUN); INFLUENT PUMP NO. 3 (H/O/A, RUN); PRIMARY PLC; BACKUP PLC; INFLUENT PUMP CONTROL PANEL; ALARMS RESET; OIT; TO SHEET SPT-I-2

SPT-I-2

SPT-I-2

WET WELL

LT 1 / LE 1

LT 2 / LE 2

LSH 1A / TSH 1A — FS2 HIGH-HIGH LEVEL FLOAT SWITCH — M

LSH 2A / TSH 2A — M

LSH 3A / TSH 3A — FS1 HIGH LEVEL FLOAT SWITCH — M

INFLUENT DISCHARGE

FOR INTERIM REVIEW ONLY NOT INTENDED FOR PERMIT, BIDDING OR CONSTRUCTION PURPOSES.
ENGINEER:
HOSS FOROUZAN
P.E. SERIAL NO.77748
05/18/2026

GAI
Gupta & Associates, Inc.
CONSULTING ENGINEERING
Registration No. F-2593
302 Dennis St.,
Houston, Texas 77006
Tel: 713-636-2936
Fax: 713-636-2987
email: hforouzan@gaiconsulting.com

IDS Engineering Group
13430 NW. Freeway
Suite 700
Houston, Tx. 77040
713.462.3178
TxEng Firm 2726
TxSurv Firm 10110700

CITY OF HOUSTON
HOUSTON PUBLIC WORKS

LIFT STATION RENEWAL AND REPLACEMENT FY 2023

SOUTHPOINT LIFT STATION P&ID DIAGRAM–I

WBS NUMBER	FOR CITY OF HOUSTON USE ONLY
R–000267–0179–4	
DRAWING SCALE	
HORIZ: NONE VERT: NONE	
CITY OF HOUSTON PM	
NAWARAJ PANTA, P.E.	
SHEET NO. 100 OF 361	

DWG. NO. SPT–I–01

NO.	DATE	REVISION	APP.

IDS JOB No. 0057-085-00

FILE PATH: O:\H8108_Lift Station Rehabilitation And Reconstruction (IDS)\6 Drawings\Instrumentation And Control\Working\South Point\H8108_SPT–I–01.dwg

PLOTTED: 5/12/2026 9:03 PM

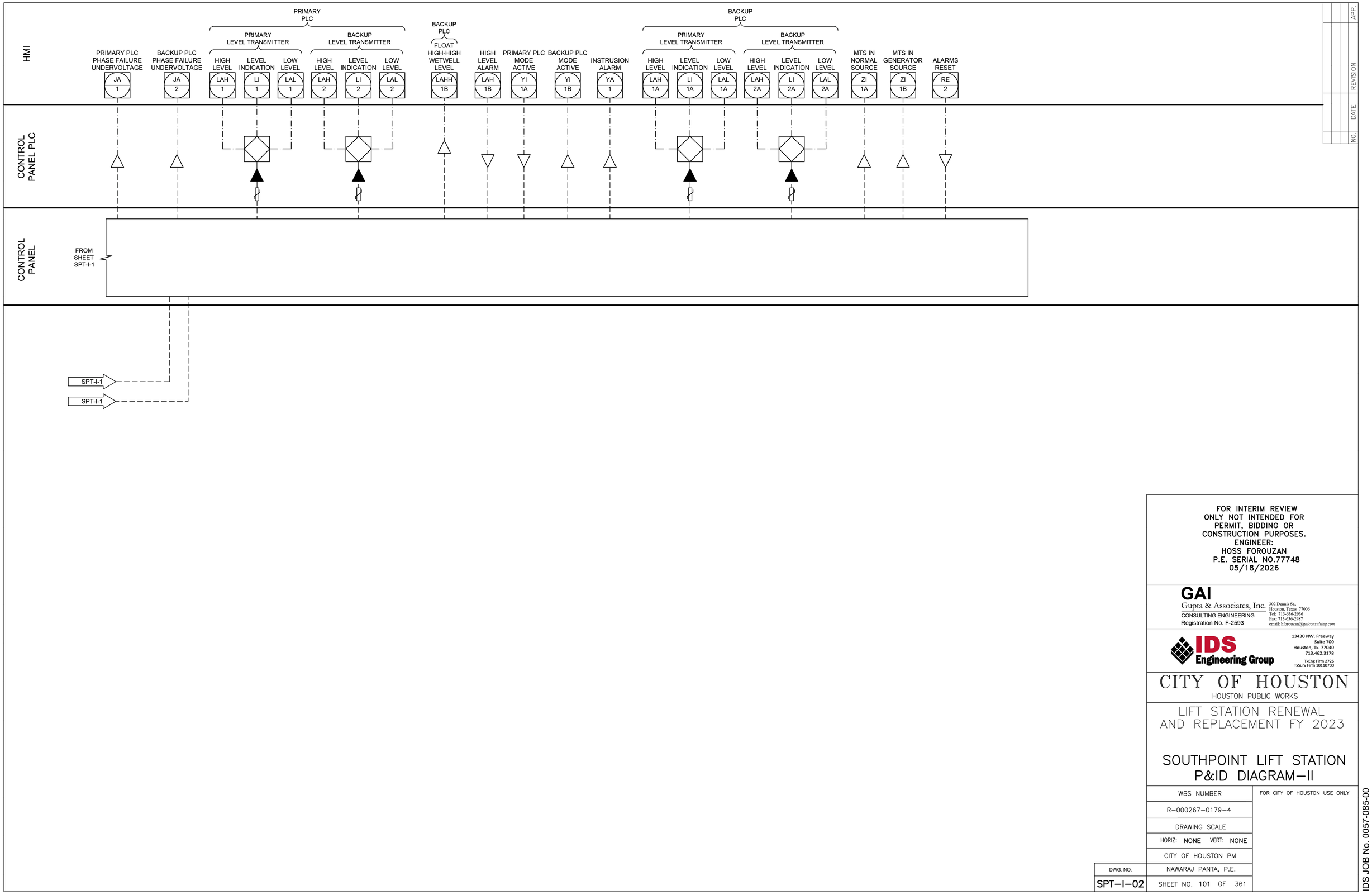

NO.	DATE	REVISION	APP.

FOR INTERIM REVIEW
ONLY NOT INTENDED FOR
PERMIT, BIDDING OR
CONSTRUCTION PURPOSES.
ENGINEER:
HOSS FOROUZAN
P.E. SERIAL NO.77748
05/18/2026

GAI
Gupta & Associates, Inc.
CONSULTING ENGINEERING
Registration No. F-2593
302 Dennis St.,
Houston, Texas 77006
Tel: 713-636-2936
Fax: 713-636-2987
email: hforouzan@gaiconsulting.com

IDS Engineering Group
13430 NW. Freeway
Suite 700
Houston, Tx. 77040
713.462.3178
TxEng Firm 2726
TxSurv Firm 10110700

CITY OF HOUSTON
HOUSTON PUBLIC WORKS

LIFT STATION RENEWAL
AND REPLACEMENT FY 2023

SOUTHPOINT LIFT STATION
P&ID DIAGRAM–II

WBS NUMBER	FOR CITY OF HOUSTON USE ONLY
R–000267–0179–4	
DRAWING SCALE	
HORIZ: NONE VERT: NONE	
CITY OF HOUSTON PM	
NAWARAJ PANTA, P.E.	
SHEET NO. 101 OF 361	

DWG. NO. SPT–I–02

IDS JOB No. 0057-085-00

FILE PATH: O:\H8108_Lift Station Rehabilitation And Reconstruction (IDS)\6 Drawings\Instrumentation And Control\Working\South Point\H8108_SPT–I–02.dwg

PLOTTED: 5/12/2026 9:03 PM

FILE PATH: O:\H8108_Lift Station Rehabilitation And Reconstruction (IDS)\6 Drawings\Instrumentation And Control\Working\South Point\H8108_SPT-I-03.dwg

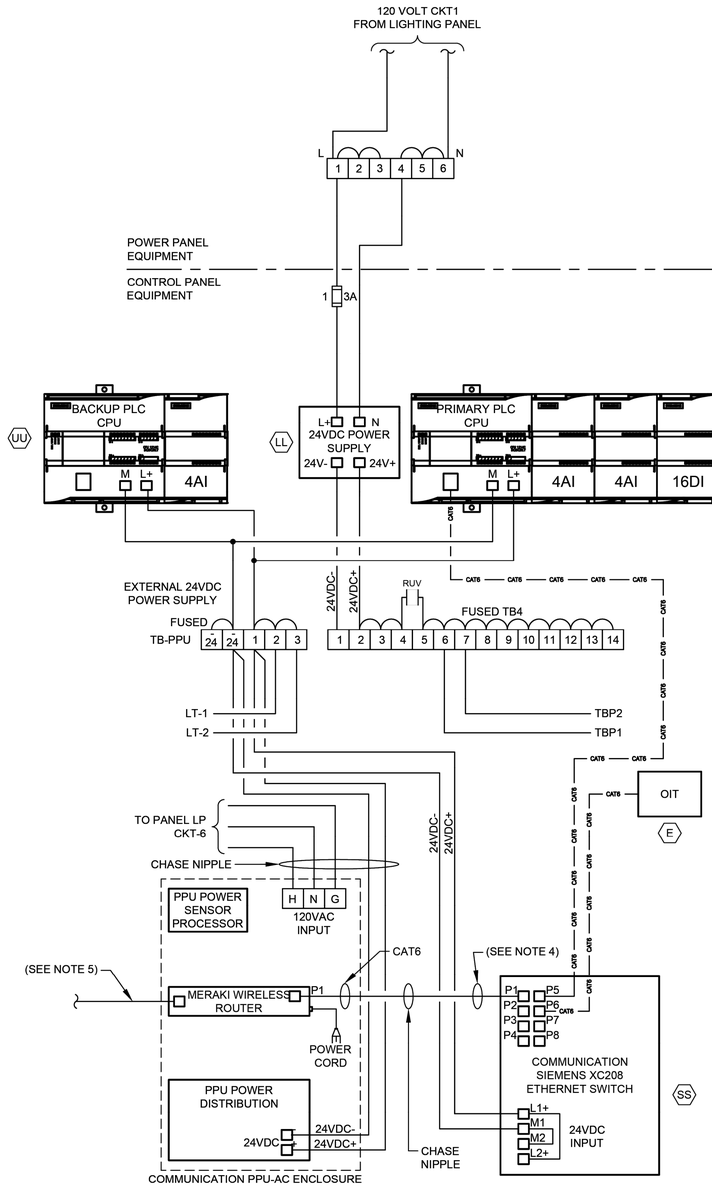

CONTROL POWER & COMMUNICATIONS WIRING

DIAGRAM

NTS

(SEE NOTE 2 & 6)

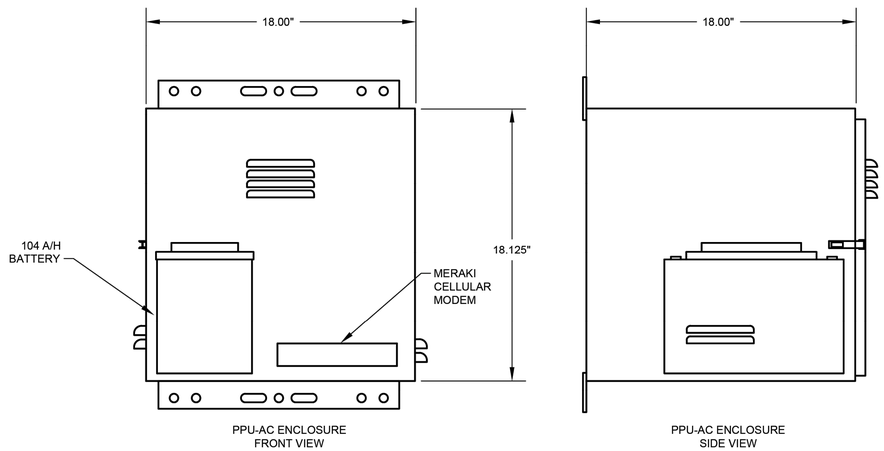

PPU-AC ENCLOSURE FRONT VIEW

PPU-AC ENCLOSURE SIDE VIEW

PPU-AC CONTROL ENCLOSURE

ELEVATION

NTS

(SEE NOTE 7)

NOTES:

1. FOR DESCRIPTION AND RATINGS OF ITEMS INDICATED WITH ITEM TAG, SEE DEVICE RATINGS SCHEDULE.
2. REFER TO SPEC SECTION 16120 FOR CONDUCTOR COLOR CODE.
3. THE PLC POWER SUPPLY SHALL FEED THE 24VDC I/O.
4. CAT6 ETHERNET CABLE FOR MERAKI CELLULAR ROUTER (P1).
5. CAT6 POE CABLE TO RADIO.
6. COMMUNICATION PPU-AC & SCADA SHALL BE PROVIDED BY CONTRACTOR INCLUDING TO RUN CONDUITS & WIRES.
7. COORDINATE WITH VENDOR TO PROVIDE PROPER VENTILATION WHERE APPLICABLE.

GENERAL NOTES:

1. NO ELECTRICAL MATERIAL, APPARATUS, DEVICES, APPLIANCES, FIXTURES, OR EQUIPMENT SHALL BE SOLD OR INSTALLED IN THE CITY UNLESS THEY ARE IN CONFORMANCE WITH THE PROVISIONS OF SECTION 508 CITY OF HOUSTON ELECTRICAL CODE, THE LAWS OF THE STATE OF TEXAS AND ANY APPLICABLE RULES AND REGULATIONS ISSUED UNDER THE AUTHORITY OF THE STATE STATUES. THE MAKER'S NAME, TRADEMARK, OR OTHER IDENTIFICATION SYMBOL SHALL BE PLACED ON ALL ELECTRICAL MATERIALS, APPARATUS, DEVICES, APPLIANCES, FIXTURES, AND EQUIPMENT USED OR INSTALLED UNDER THE PROVISIONS OF THIS CODE. ALL ELECTRICAL MATERIALS AND EQUIPMENT SHALL BE LISTED AND LABELED FOR THE INTENDED USE AND SHALL BE INCLUDED IN A LIST PUBLISHED BY AN APPROVAL AGENCY.

NO.	DATE	REVISION	APP.

FOR INTERIM REVIEW
ONLY NOT INTENDED FOR
PERMIT, BIDDING OR
CONSTRUCTION PURPOSES.
ENGINEER:
HOSS FOROUZAN
P.E. SERIAL NO.77748
05/18/2026

GAI
Gupta & Associates, Inc.
CONSULTING ENGINEERING
Registration No. F-2593
302 Dennis St.,
Houston, Texas 77006
Tel: 713-636-2936
Fax: 713-636-2987
email: hforouzan@gaiconsulting.com

IDS Engineering Group
13430 NW. Freeway
Suite 700
Houston, Tx. 77040
713.462.3178
TxEng Firm 2726
TxSurv Firm 10110700

CITY OF HOUSTON
HOUSTON PUBLIC WORKS

LIFT STATION RENEWAL AND REPLACEMENT FY 2023

SOUTHPOINT LIFT STATION COMMUNICATIONS DIAGRAM

WBS NUMBER	FOR CITY OF HOUSTON USE ONLY
R-000267-0179-4	
DRAWING SCALE	
HORIZ: NTS VERT: NTS	
CITY OF HOUSTON PM	
NAWARAJ PANTA, P.E.	
SHEET NO. 102 OF 361	

DWG. NO.
SPT-I-03

IDS JOB No. 0057-085-00

PLOTTED: 5/12/2026 9:03 PM

EQUIPMENT AND DEVICE SCHEDULE

ITEM	QUANTITY	DESCRIPTION
A	1	PANEL BOARD, 120/240V, 1 PHASE, 3 WIRE, 100A, 12 CKTS
B	2	FULL VOLTAGE, NON-REVERSING, SINGLE SPEED, AUTOMATIC MOTOR STARTER W/120 VOLT CONTROL COIL, NEMA SIZE AS SCHEDULED.
C	2	TIME DELAY RELAY WITH THREE FORM C CONTACTS, 120VAC COIL AND 11 PIN SOCKET BASE.
D	1	SINGLE CHANNEL INTRINSICALLY SAFE RELAY
E	1	PROGRAMMING SCREEN (OIT)
F	3	HAND-OFF-AUTO SWITCH, 3 POSITION, HEAVY-DUTY, OILTIGHT WITH 2 SETS OF CONTACT BLOCKS (PUMP CONTROL)
G	3	INDICATING LIGHT, HEAVY DUTY, OILTIGHT, RED, 24 VDC, LED, WITH "RUN" LEGEND
H	1	PERPETUAL POWER UNIT (PPU)
I	1	PUMP ALARM RESET PUSHBUTTON
J	2	SWITCH FOR CABINET LIGHT, 120V, 20A, SPST
K	3	DUPLEX RECEPTACLE, 120V, 20A, 2 WIRE, GROUNDED
L	2	24" LED STRIP LIGHT 120V SUITABLE FOR ZERO DEGREE OPERATION.
M	1	SURGE PROTECTOR - INCOMING POWER
N	*	NOT USED.
P	2	CURRENT TRANSFORMER, RATIO AS SCHEDULED W/4-20mA OUTPUT.
Q	12	TERMINAL BLOCKS, SIZED FOR MOTOR POWER REQUIREMENTS
R	*	RELAY WITH THREE FORM C CONTACTS, AND 11 PIN SOCKET BASE
S	*	NOT USED.
T	*	NAMEPLATES, SEE SPECIFICATIONS (SEE NAMEPLATE SCHEDULE)
U	2	SOLID STATE MOTOR OVERLOAD RELAY
V	6	FUSE HOLDER & FUSES - PHASE FAILURE
W	1	NEMA 3R GASKETED ALUMINUM ENCLOSURE WITHOUT VENTS 72"H x 60"W x 36"D
X	1	DOOR MOUNTED ROTARY HANDLE DISCONNECT SWITCH (SUITABLE FOR ENVIRONMENT)
Y	1	THERMAL-MAGNETIC MOLDED CASE MAIN CIRCUIT BREAKER, SIZE AS SCHEDULED
Z	2	ADJUSTABLE INSTANTENOUS TRIP MOTOR CIRCUIT PROTECTOR, SIZE AS SCHEDULED
AA	*	TERMINAL BLOCKS
BB	2	EXTERNAL OVERLOAD RESET PUSHBUTTON MECHANISM
CC	3	ANALOG I/O SURGE SUPPRESSOR
DD	1	WIRE DUCT 2" WIDE x 2" DEEP MINIMUM
EE	1	THERMAL-MAGNETIC MODLED CASE CIRCUIT BREAKER FOR LIGHTING TRANSFORMER, SIZE AS SCHEDULED
FF	1	GROUND BUS
GG	1	10 KVA, 480 - 240/120V,1ϕ, 3W DRY TYPE NEMA 3R ENCLOSURE TRANSFORMER
HH	*	NOT USED.
II	1	120VAC - 24VAC POWER SUPPLY (AS REQUIRED)
JJ	11	CARTRIDGE FUSES & FUSE HOLDER
KK	8	QUARTER TURN CAPTIVE DOOR CLOSURE
LL	1	120VAC - 24VDC PLC POWER SUPPLY 5A
MM	2	MOTION SWITCH
NN	*	NOT USED
PP	2	INDICATING LED LIGHT, HEAVY DUTY, OILTIGHT, GREEN, 24 VDC, LED WITH " PRIMARY PLC" & "BACKUP PLC" LEGEND
QQ	*	NOT USED
RR	*	NOT USED
SS	1	COMMUNICATION ETHERNET SWITCH
TT	1	POWER SURGE PROTECTOR - CONTROL POWER
UU	2	PROGRAMMABLE LOGIC CONTROLLER WITH EXPANSION UNIT
VV	1	PHASE AND UNDER VOLTAGE MONITOR
WW	*	FUSED TERMINAL BLOCKS
XX	2	PUMP PROTECTION MODULE RATED FOR CLASS I, DIVISION I
YY	2	ANALOG SIGNAL ISOLATOR
ZZ	-	NOT USED
AB	-	NOT USED.
AC	1	POWER DISTRIBUTION BLOCK
AD	1	NEUTRAL LUG
AE	1	6" EXHAUST FAN, 120V, STAINLESS FILTERS & GRILL PACKAGE W/BUG GUARD
AF	1	T-STAT FOR EXHAUST FAN

* - AS SCHEDULED

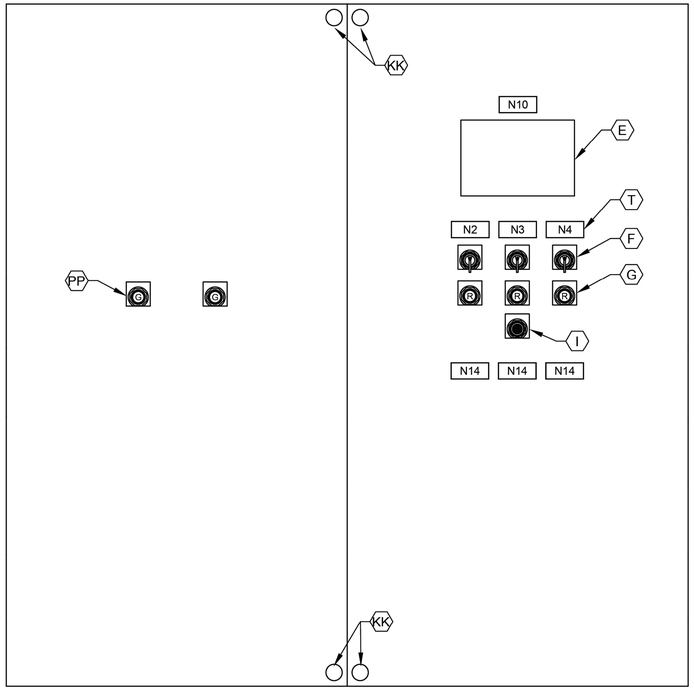

CONTROL PANEL FRONT INNER DOOR

ELEVATION

NTS

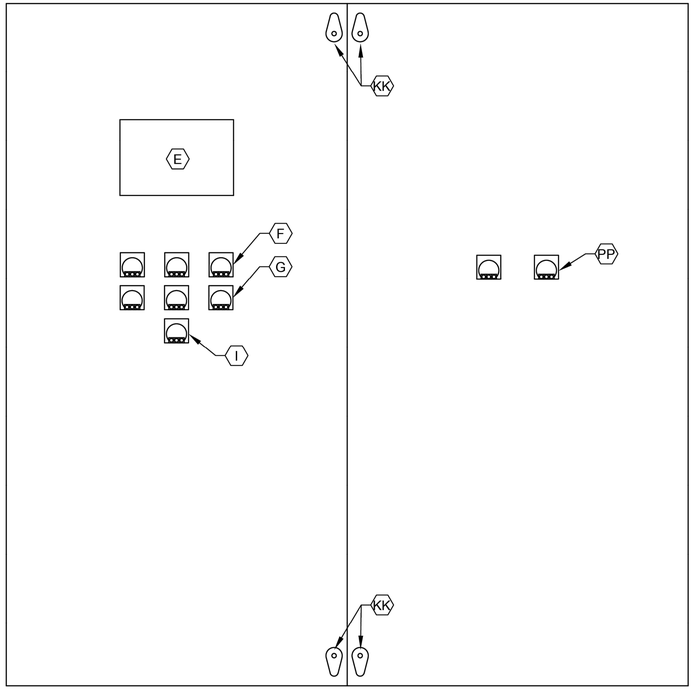

CONTROL PANEL BACK INNER DOOR

ELEVATION

NTS

NOTES:

1. NAMEPLATES SHALL BE MOUNTED TO PANELS USING STAINLESS STEEL HARDWARE.
2. REFER SPECIFICATIONS FOR ALL PANEL COMPONENTS.

GENERAL NOTES:

1. NO ELECTRICAL MATERIAL, APPARATUS, DEVICES, APPLIANCES, FIXTURES, OR EQUIPMENT SHALL BE SOLD OR INSTALLED IN THE CITY UNLESS THEY ARE IN CONFORMANCE WITH THE PROVISIONS OF SECTION 508 CITY OF HOUSTON ELECTRICAL CODE, THE LAWS OF THE STATE OF TEXAS AND ANY APPLICABLE RULES AND REGULATIONS ISSUED UNDER THE AUTHORITY OF THE STATE STATUES. THE MAKER'S NAME, TRADEMARK, OR OTHER IDENTIFICATION SYMBOL SHALL BE PLACED ON ALL ELECTRICAL MATERIALS, APPARATUS, DEVICES, APPLIANCES, FIXTURES, AND EQUIPMENT USED OR INSTALLED UNDER THE PROVISIONS OF THIS CODE. ALL ELECTRICAL MATERIALS AND EQUIPMENT SHALL BE LISTED AND LABELED FOR THE INTENDED USE AND SHALL BE INCLUDED IN A LIST PUBLISHED BY AN APPROVAL AGENCY.

NO.	DATE	REVISION	APP.

FOR INTERIM REVIEW
ONLY NOT INTENDED FOR
PERMIT, BIDDING OR
CONSTRUCTION PURPOSES.
ENGINEER:
HOSS FOROUZAN
P.E. SERIAL NO.77748
05/18/2026

GAI
Gupta & Associates, Inc.
CONSULTING ENGINEERING
Registration No. F-2593
302 Dennis St.,
Houston, Texas 77006
Tel: 713-636-2936
Fax: 713-636-2987
email: hforouzan@gaiconsulting.com

IDS Engineering Group
13430 NW. Freeway
Suite 700
Houston, Tx. 77040
713.462.3178
TxEng Firm 2726
TxSurv Firm 10110700

CITY OF HOUSTON
HOUSTON PUBLIC WORKS

LIFT STATION RENEWAL
AND REPLACEMENT FY 2023

SOUTHPOINT LIFT STATION CONTROL CABINET EQUIPMENT LAYOUT & SCHEDULE

WBS NUMBER	FOR CITY OF HOUSTON USE ONLY
R-000267-0179-4	
DRAWING SCALE	
HORIZ: NTS VERT: NTS	
CITY OF HOUSTON PM	
NAWARAJ PANTA, P.E.	
SHEET NO. 103 OF 361	

DWG. NO. SPT-I-04

IDS JOB No. 0057-085-00

FILE PATH: O:\H8108_Lift Station Rehabilitation And Reconstruction (IDS)\6 Drawings\Instrumentation And Control\Working\South Point\H8108_SPT-I-04.dwg

PLOTTED: 5/12/2026 9:03 PM

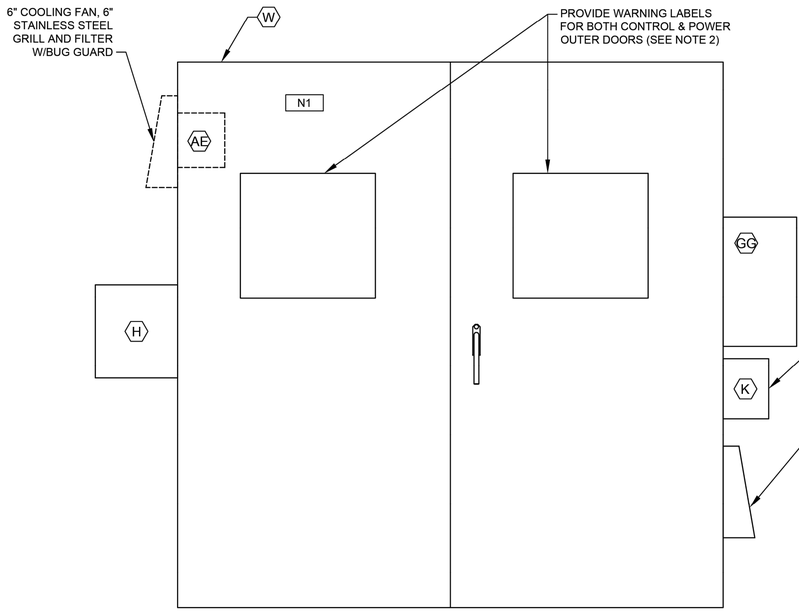

CONTROL CABINET (CONTROL SIDE)
OUTER DOOR

ELEVATION

NTS

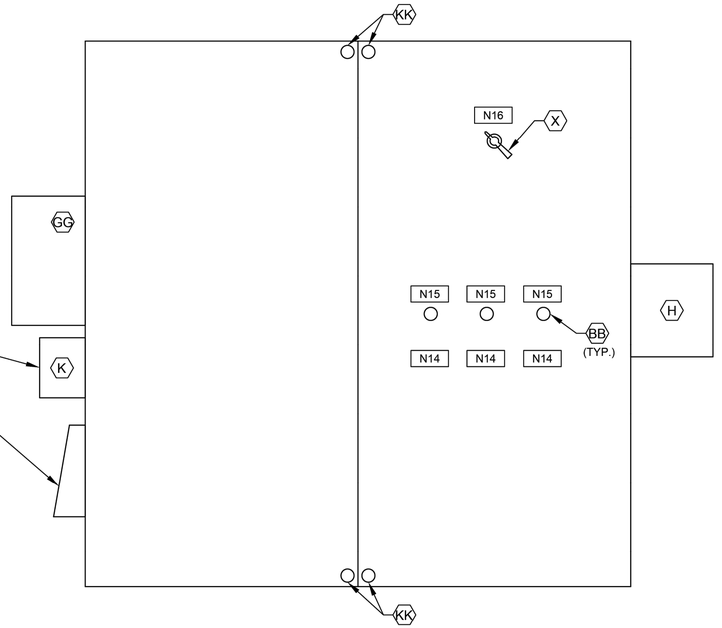

CONTROL CABINET (POWER SIDE)
INNER DOOR

ELEVATION

NTS

(SEE NOTE 1)

NOTES:

1. SEE SHEET SPT-I-4 FOR EQUIPMENT SCHEDULE.
2. REFER TO NEC SECTIONS 110.16 & 110.21

GENERAL NOTES:

1. NO ELECTRICAL MATERIAL, APPARATUS, DEVICES, APPLIANCES, FIXTURES, OR EQUIPMENT SHALL BE SOLD OR INSTALLED IN THE CITY UNLESS THEY ARE IN CONFORMANCE WITH THE PROVISIONS OF SECTION 508 CITY OF HOUSTON ELECTRICAL CODE, THE LAWS OF THE STATE OF TEXAS AND ANY APPLICABLE RULES AND REGULATIONS ISSUED UNDER THE AUTHORITY OF THE STATE STATUES. THE MAKER'S NAME, TRADEMARK, OR OTHER IDENTIFICATION SYMBOL SHALL BE PLACED ON ALL ELECTRICAL MATERIALS, APPARATUS, DEVICES, APPLIANCES, FIXTURES, AND EQUIPMENT USED OR INSTALLED UNDER THE PROVISIONS OF THIS CODE. ALL ELECTRICAL MATERIALS AND EQUIPMENT SHALL BE LISTED AND LABELED FOR THE INTENDED USE AND SHALL BE INCLUDED IN A LIST PUBLISHED BY AN APPROVAL AGENCY.

NO.	DATE	REVISION	APP.

NAMEPLATE SCHEDULE

DESIGNATION	ENGRAVED
N1	PUMP STATION DESIGNATION
N2	PUMP NO. 1
N3	PUMP NO. 2
N4	PUMP NO. 3
N5	NOT USED.
N6	NOT USED.
N7	NOT USED.
N8	NOT USED.
N9	NOT USED.
N10	PROGRAMMING SCREEN
N11	NOT USED.
N12	PRIMARY PLC
N13	BACKUP PLC
N14	MOTOR DATA HORSEPOWER (OUTPUT) ---------- RPM AT FULL LOAD ---------- TIME RATING ---------- FREQUENCY ---------- NUMBER OF PHASES ---------- MODEL NUMBER ---------- RATED VOLTAGE ---------- SERVICE FACTOR ---------- FULL LOAD AMPS ---------- INSULATION CLAS ---------- NEMA DESIGN LETTER ---------- TEMPERATURE RISE ---------- NEMA FRAME SIZE ---------- DATE OF MANUFACTURE ---------- THERMO PROTECTION (IF REQUIRED) -- MOISTURE PROTECTION (IF REQUIRED)-
N15	EXTERNAL OVERLOAD RESET PUSH BUTTON MECHANISM
N16	MAIN BREAKER

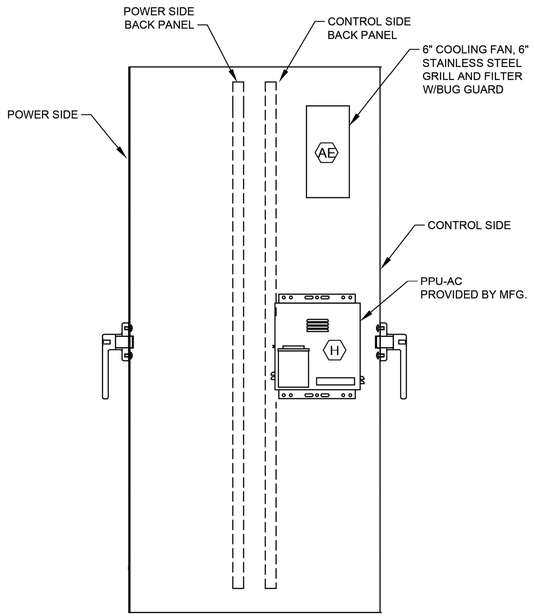

CONTROL CABINET (LEFT SIDE VIEW)

ELEVATION

NTS

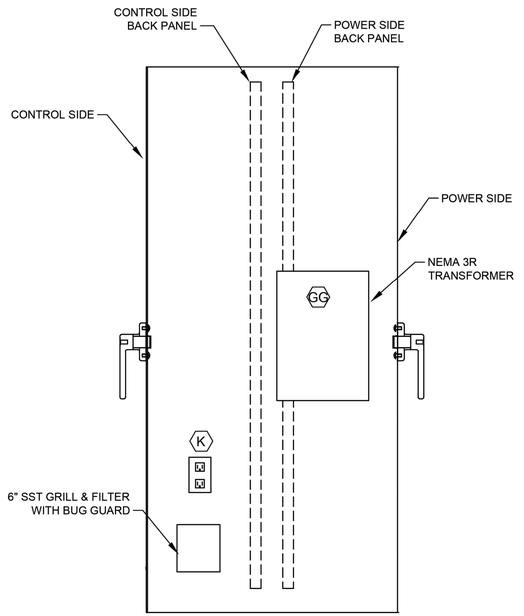

CONTROL CABINET (RIGHT SIDE VIEW)

ELEVATION

NTS

FOR INTERIM REVIEW
ONLY NOT INTENDED FOR
PERMIT, BIDDING OR
CONSTRUCTION PURPOSES.
ENGINEER:
HOSS FOROUZAN
P.E. SERIAL NO.77748
05/18/2026

GAI
Gupta & Associates, Inc.
CONSULTING ENGINEERING
Registration No. F-2593
302 Dennis St.,
Houston, Texas 77006
Tel: 713-636-2936
Fax: 713-636-2987
email: hforouzan@gaiconsulting.com

IDS Engineering Group
13430 NW. Freeway
Suite 700
Houston, Tx. 77040
713.462.3178
TxEng Firm 2726
TxSurv Firm 10110700

CITY OF HOUSTON
HOUSTON PUBLIC WORKS

LIFT STATION RENEWAL
AND REPLACEMENT FY 2023

SOUTHPOINT LIFT STATION CONTROL PANEL EQUIPMENT LAYOUT–I

WBS NUMBER	FOR CITY OF HOUSTON USE ONLY
R–000267–0179–4	
DRAWING SCALE	
HORIZ: NTS VERT: NTS	
CITY OF HOUSTON PM	
NAWARAJ PANTA, P.E.	
DWG. NO. SPT–I–05	SHEET NO. 104 OF 361

IDS JOB No. 0057-085-00

FILE PATH: O:\H8108_Lift Station Rehabilitation And Reconstruction (IDS)\6 Drawings\Instrumentation And Control\Working\South Point\H8108_SPT–I–05.dwg

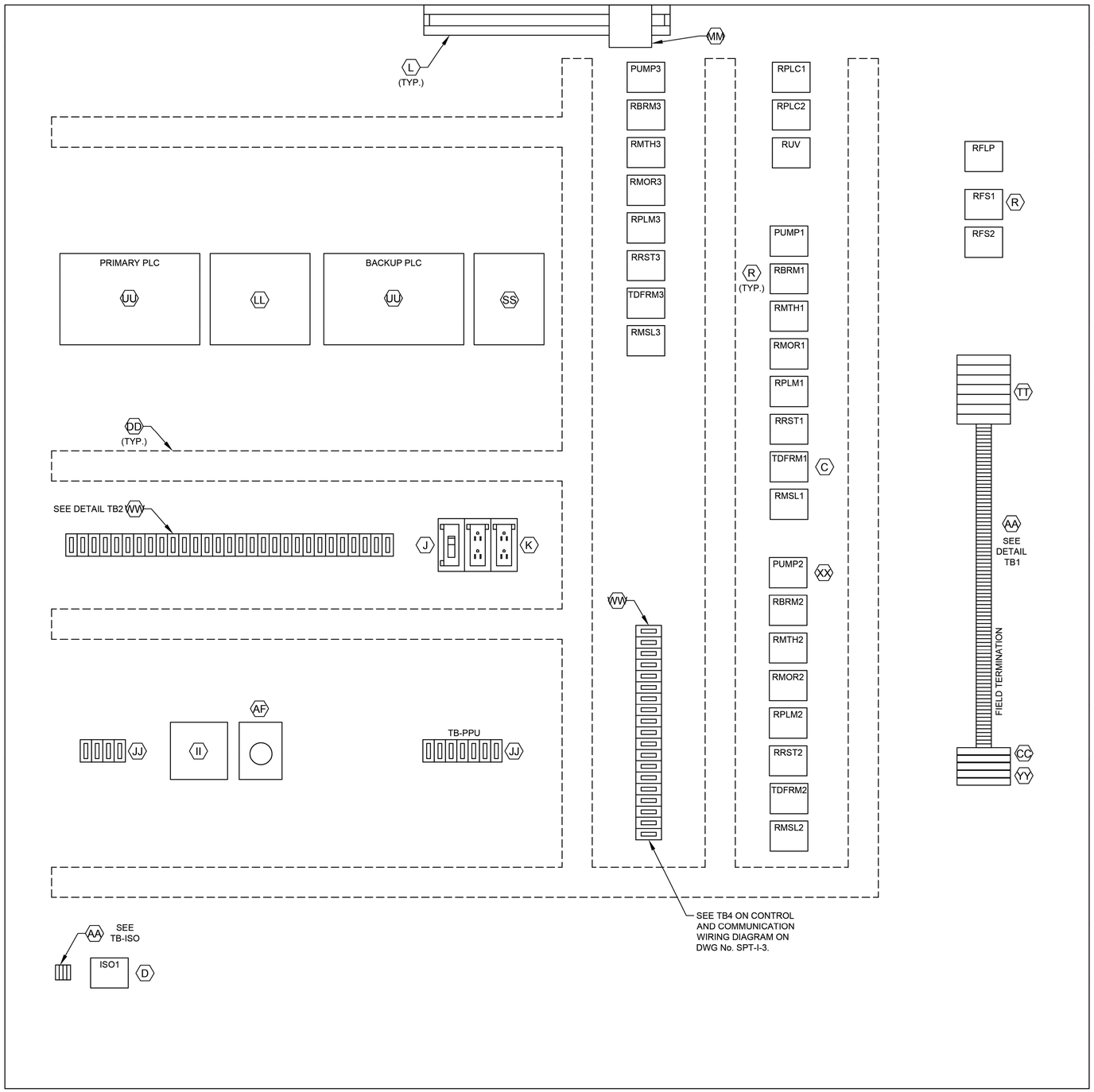

CONTROL PANEL
ELEVATION

L1A
L1N
SPARE
3
3N
49
50
51
52
53
54
1004
1
24V-
24V-
1002
2
11
1001
1001A
12
1003
1003A
1002
1004
18
3N
19
20
36
36N
41
42
43
44
SPARE
L1A
L1N
103
104
105
106
107
108
110
113
115
116
119
SPARE
203
204
205
206
207
208
210
213
215
216
219

DETAIL TB1

ALL L AND N FOR EACH PUMP CONTROL TO BE FUSED

303
304
305
306
307
308
310
313
315
316
319
36A
37A
50
52
54
52A
54A
L+
M
35B
38B
41B
47B
13B
13AB
13GB
L+
M
14B
14AB
14GB
L+
M
13
13A
13G
14
14A
14G
SPARE
18
SPARE
28
29
32
35B
33
42
44
SPARE
103
104
115
109
110
118
120
121
122
123
SPARE
209
210
211
218
220
222
223

DETAIL TB2

1500
1501
1503
1504

DETAIL TB-ISO

LEGEND	
TAG	DESCRIPTION
RMTH	MOTOR HIGH TEMPERATURE ALARM RELAY
RPLM	PLC PUMP RUN RELAY
RRST	PUMP RESET AUX RELAY
RPLC	PLC MODE AUX RELAY
RMOR	MOTOR OVERLOAD ALARM RELAY
RBRM	BACKUP SYSTEM RUN RELAY
RUV	UNDER VOLTAGE RELAY
ISO	INTRINSICALLY SAFE RELAY
RFS	PUMP RUN FLOAT SWITCH RELAY
TDFRM	TIMER FLOAT SWITCH RUN RELAY
RMSL	MOTOR SEAL LEAK ALARM RELAY
RFLP	FLOAT LOCKOUT PUMP RELAY

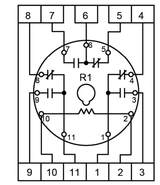

RELAY DETAIL
ITEM R

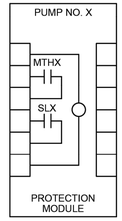

PUMP PROTECTION MODULE
DETAIL, ITEM XX

NOTE: REPLACE "X" WITH APPROPRIATE PUMP NO.

NOTES:

1. SEE SHEET SPT-I-4 FOR EQUIPMENT SCHEDULE.

GENERAL NOTES:

1. NO ELECTRICAL MATERIAL, APPARATUS, DEVICES, APPLIANCES, FIXTURES, OR EQUIPMENT SHALL BE SOLD OR INSTALLED IN THE CITY UNLESS THEY ARE IN CONFORMANCE WITH THE PROVISIONS OF SECTION 508 CITY OF HOUSTON ELECTRICAL CODE, THE LAWS OF THE STATE OF TEXAS AND ANY APPLICABLE RULES AND REGULATIONS ISSUED UNDER THE AUTHORITY OF THE STATE STATUES. THE MAKER'S NAME, TRADEMARK, OR OTHER IDENTIFICATION SYMBOL SHALL BE PLACED ON ALL ELECTRICAL MATERIALS, APPARATUS, DEVICES, APPLIANCES, FIXTURES, AND EQUIPMENT USED OR INSTALLED UNDER THE PROVISIONS OF THIS CODE. ALL ELECTRICAL MATERIALS AND EQUIPMENT SHALL BE LISTED AND LABELED FOR THE INTENDED USE AND SHALL BE INCLUDED IN A LIST PUBLISHED BY AN APPROVAL AGENCY.

NO.	DATE	REVISION	APP.

FOR INTERIM REVIEW
ONLY NOT INTENDED FOR
PERMIT, BIDDING OR
CONSTRUCTION PURPOSES.
ENGINEER:
HOSS FOROUZAN
P.E. SERIAL NO.77748
05/18/2026

GAI
Gupta & Associates, Inc.
CONSULTING ENGINEERING
Registration No. F-2593
302 Dennis St.,
Houston, Texas 77006
Tel: 713-636-2936
Fax: 713-636-2987
email: hforouzan@gaiconsulting.com

IDS Engineering Group
13430 NW. Freeway
Suite 700
Houston, Tx. 77040
713.462.3178
TxEng Firm 2726
TxSurv Firm 10110700

CITY OF HOUSTON
HOUSTON PUBLIC WORKS

LIFT STATION RENEWAL
AND REPLACEMENT FY 2023

SOUTHPOINT LIFT STATION CONTROL PANEL EQUIPMENT LAYOUT—II

WBS NUMBER	FOR CITY OF HOUSTON USE ONLY
R-000267-0179-4	
DRAWING SCALE	
HORIZ: NONE VERT: NONE	
CITY OF HOUSTON PM	
NAWARAJ PANTA, P.E.	
DWG. NO. SPT-I-06	SHEET NO. 105 OF 361

IDS JOB No. 0057-085-00

PLOTTED: 5/12/2026 9:03 PM
FILE PATH: O:\H8108_Lift Station Rehabilitation And Reconstruction (IDS)\6 Drawings\Instrumentation And Control\Working\South Point\H8108_SPT-I-06.dwg

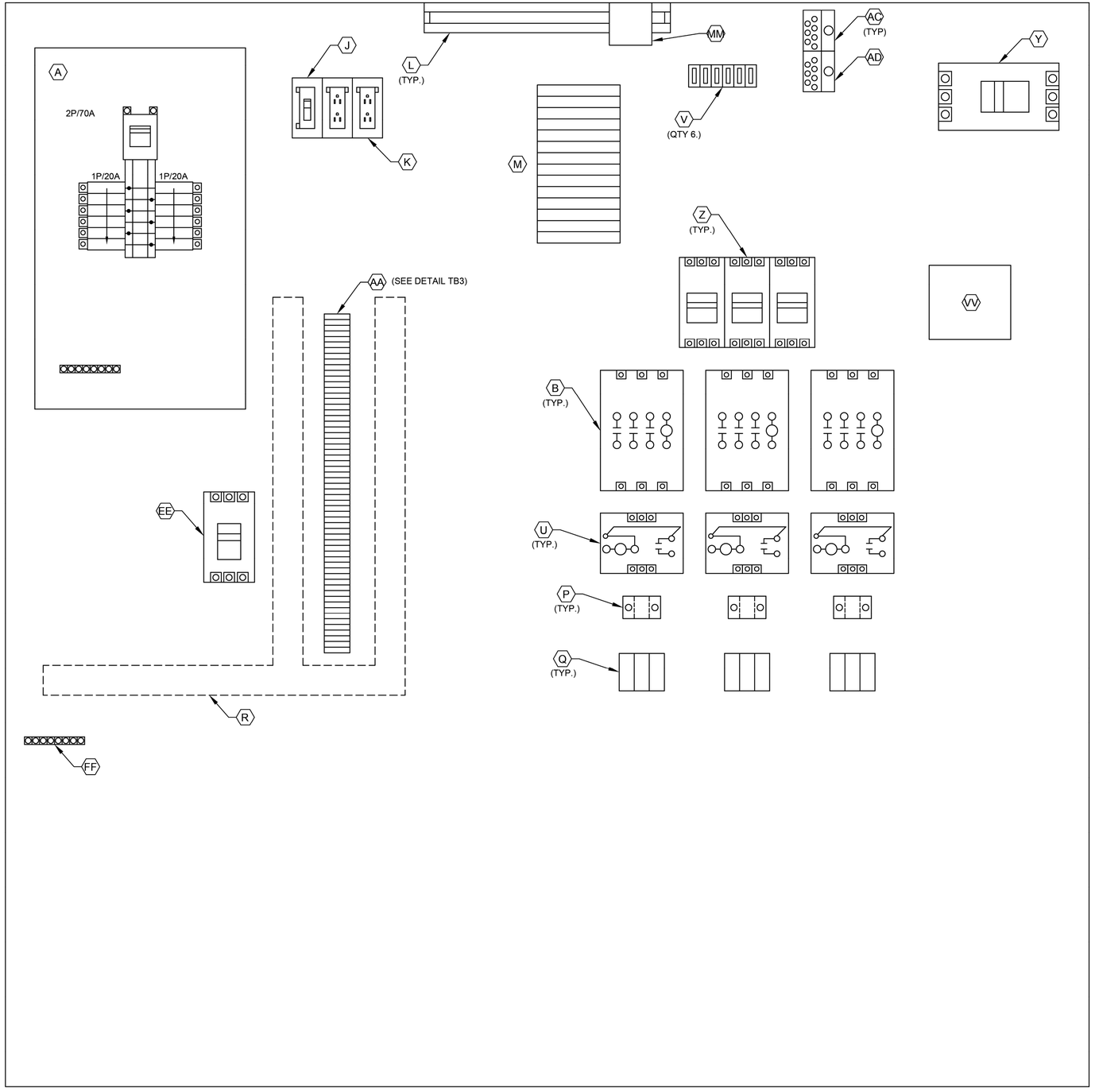

POWER PANEL
ELEVATION

3
18
L1A
L1N
SPARE
SPARE
103
104
105
106
107
108
110
113
115
116
119
SPARE
203
204
205
206
207
208
210
213
215
216
216
219
SPARE
303
304
305
306
307
308
310
313
315
316
316
319
SPARE
SPARE
SPARE
SPARE
SPARE
SPARE
SPARE
SPARE
SPARE
SPARE
SPARE

DETAIL TB3

NOTES:

1. SEE SHEET SPT-I-4 FOR EQUIPMENT SCHEDULE.

GENERAL NOTES:

1. NO ELECTRICAL MATERIAL, APPARATUS, DEVICES, APPLIANCES, FIXTURES, OR EQUIPMENT SHALL BE SOLD OR INSTALLED IN THE CITY UNLESS THEY ARE IN CONFORMANCE WITH THE PROVISIONS OF SECTION 508 CITY OF HOUSTON ELECTRICAL CODE, THE LAWS OF THE STATE OF TEXAS AND ANY APPLICABLE RULES AND REGULATIONS ISSUED UNDER THE AUTHORITY OF THE STATE STATUES. THE MAKER'S NAME, TRADEMARK, OR OTHER IDENTIFICATION SYMBOL SHALL BE PLACED ON ALL ELECTRICAL MATERIALS, APPARATUS, DEVICES, APPLIANCES, FIXTURES, AND EQUIPMENT USED OR INSTALLED UNDER THE PROVISIONS OF THIS CODE. ALL ELECTRICAL MATERIALS AND EQUIPMENT SHALL BE LISTED AND LABELED FOR THE INTENDED USE AND SHALL BE INCLUDED IN A LIST PUBLISHED BY AN APPROVAL AGENCY.

NO.	DATE	REVISION	APP.

FOR INTERIM REVIEW
ONLY NOT INTENDED FOR
PERMIT, BIDDING OR
CONSTRUCTION PURPOSES.
ENGINEER:
HOSS FOROUZAN
P.E. SERIAL NO.77748
05/18/2026

GAI
Gupta & Associates, Inc.
CONSULTING ENGINEERING
Registration No. F-2593
302 Dennis St.,
Houston, Texas 77006
Tel: 713-636-2936
Fax: 713-636-2987
email: hforouzan@gaiconsulting.com

IDS Engineering Group
13430 NW. Freeway
Suite 700
Houston, Tx. 77040
713.462.3178
TxEng Firm 2726
TxSurv Firm 10110700

CITY OF HOUSTON
HOUSTON PUBLIC WORKS

LIFT STATION RENEWAL
AND REPLACEMENT FY 2023

SOUTHPOINT LIFT STATION
CONTROL PANEL
EQUIPMENT LAYOUT–III

WBS NUMBER	FOR CITY OF HOUSTON USE ONLY
R–000267–0179–4	
DRAWING SCALE	
HORIZ: NONE VERT: NONE	
CITY OF HOUSTON PM	
NAWARAJ PANTA, P.E.	
SHEET NO. 106 OF 361	

DWG. NO.
SPT–I–07

IDS JOB No. 0057-085-00

PLOTTED: 5/12/2026 9:03 PM

FILE PATH: O:\H8108_Lift Station Rehabilitation And Reconstruction (IDS)\6 Drawings\Instrumentation And Control\1Working\South Point\H8108_SPT–I–07.dwg

PLOTTED: 5/12/2026 9:03 PM

FILE PATH: O:\H8108_Lift Station Rehabilitation And Reconstruction (IDS)\6 Drawings\Instrumentation And Control\Working\South Point\H8108_SPT-I-08.dwg

FIELD

CONTROL PANEL

DOOR

INTERIOR PANEL

PLC

120 VAC POWER

L1

L1A

L1N

JE-1 CONTROL POWER SURGE PROTECTOR (TT)

24VDC

3

3N

120V CKT3 FROM LIGHTING PANEL

L3A

20A

T-STAT

TU

AE

FAN

RPLC3

11

8

RFS3

1

3

OIT

E

BACK UP PLC

36A 50mA I0.1 BACKUP PLC MODE ACTIVE

37A 50mA I0.2 FLOAT HIGH-HIGH LEVEL ALARM ALL PUMPS ON

ZS-1 TR
MANUAL TRANSFER SWITCH
CONTACTS SHOWING
SOURCE OF POWER
(SEE NOTE 1)

ZI-1A

ZI-1B

49

50

51

52

53

54

50 50mA I0.4 MTS IN NORMAL SOURCE

52 50mA I0.5 MTS IN EMERGENCY SOURCE

54 50mA I0.7 SPARE

120V CKT10 FROM LIGHTING PANEL

L10A

20A

RUV

6

7

INTRINSICALLY SAFE RELAY

ISO 1

5

6

1

3

4

RFS1

R

2

10

RFS2

R

2

10

LEVEL
TRANSMITTER J-BOX

HIGH LEVEL ALARM
FS1

HIGH-HIGH LEVEL
ALARM
FS2

FLOAT SWITCHES LOCATED
INSIDE WET WELL

1500

1501

1503

1504

RFS1

6

7

RFS1

1

3

52A 50mA I0.2 FLOAT HIGH-HIGH LEVEL ALARM ALL PUMPS ON

54A 50mA I0.3 SPARE

L1A

L1N

MATCHLINE 1

LEGEND

△ DEVICE OR FIELD TERMINAL LOCATED AT MOTOR

✳ DEVICE OR FIELD TERMINAL LOCATED REMOTE

□ DEVICE OR FIELD TERMINAL LOCATED AT MCC/POWER PANEL

■ FIELD TERMINAL LOCATED AT CONTROL PANEL

▲ REMOTE TERMINAL

● DEVICE TERMINAL NO.

◆ PLC INTERFACE TERMINAL

NOTES:

1. PROVIDE AUTO TRANSFER SWITCH DRY CONTACT.
2. ALL FLOAT CONTROL CIRCUIT WIRES COLOR SHALL BE YELLOW.

GENERAL NOTES:

1. NO ELECTRICAL MATERIAL, APPARATUS, DEVICES, APPLIANCES, FIXTURES, OR EQUIPMENT SHALL BE SOLD OR INSTALLED IN THE CITY UNLESS THEY ARE IN CONFORMANCE WITH THE PROVISIONS OF SECTION 508 CITY OF HOUSTON ELECTRICAL CODE, THE LAWS OF THE STATE OF TEXAS AND ANY APPLICABLE RULES AND REGULATIONS ISSUED UNDER THE AUTHORITY OF THE STATE STATUES. THE MAKER'S NAME, TRADEMARK, OR OTHER IDENTIFICATION SYMBOL SHALL BE PLACED ON ALL ELECTRICAL MATERIALS, APPARATUS, DEVICES, APPLIANCES, FIXTURES, AND EQUIPMENT USED OR INSTALLED UNDER THE PROVISIONS OF THIS CODE. ALL ELECTRICAL MATERIALS AND EQUIPMENT SHALL BE LISTED AND LABELED FOR THE INTENDED USE AND SHALL BE INCLUDED IN A LIST PUBLISHED BY AN APPROVAL AGENCY.

NO.	DATE	REVISION	APP.

FOR INTERIM REVIEW
ONLY NOT INTENDED FOR
PERMIT, BIDDING OR
CONSTRUCTION PURPOSES.
ENGINEER:
HOSS FOROUZAN
P.E. SERIAL NO.77748
05/18/2026

GAI
Gupta & Associates, Inc.
CONSULTING ENGINEERING
Registration No. F-2593
302 Dennis St.,
Houston, Texas 77006
Tel: 713-636-2936
Fax: 713-636-2987
email: hforouzan@gaiconsulting.com

IDS Engineering Group
13430 NW. Freeway
Suite 700
Houston, Tx. 77040
713.462.3178
TxEng Firm 2726
TxSurv Firm 10110700

CITY OF HOUSTON
HOUSTON PUBLIC WORKS

LIFT STATION RENEWAL
AND REPLACEMENT FY 2023

SOUTHPOINT LIFT STATION
CONTROL PANEL
CONTROL WIRING DIAGRAM–I

WBS NUMBER	FOR CITY OF HOUSTON USE ONLY
R–000267–0179–4	
DRAWING SCALE	
HORIZ: NONE VERT: NONE	
CITY OF HOUSTON PM	
NAWARAJ PANTA, P.E.	
SHEET NO. 107 OF 361	

DWG. NO. SPT–I–08

IDS JOB No. 0057-085-00

PLOTTED: 5/12/2026 9:03 PM

FILE PATH: O:\H8108_Lift Station Rehabilitation And Reconstruction (IDS)\6 Drawings\Instrumentation And Control\Working\South Point\H8108_SPT-I-09.dwg

NO.	DATE	REVISION	APP.

FIELD | CONTROL PANEL: DOOR | CONTROL PANEL: INTERIOR PANEL | CONTROL PANEL: PLC

MATCHLINE 1

120 VAC POWER

24VDC

L1A 3 — 3N L1N

RADAR LEVEL TRANSMITTER JUNCTION BOX

MFG. CABLE

PRIMARY RADAR LEVEL TRANSMITTER

LT-1

MFG. CABLE

BACK UP RADAR LEVEL TRANSMITTER

LT-2

RBRM1 — 5 — R — 2 — 10

RBRM2 — 6 — R — 2 — 10

RBRM3 — 6 — R — 2 — 10

1004

ANALOG ISOLATOR (YY)

1

24-

1002

ANALOG ISOLATOR (YY)

24V-

2

11 — 11

1001 — 1001

1001A — 1001A

12 — 12

1003 — 1003

1003A — 1003A

ANALOG I/O SURGE SUPPRESSOR (CC)

1 — 24V+

2 — 1001B

3 — 24V+

4 — 1003B

L1A 3 — 3N L1N

MATCHLINE 2

BACK UP PLC

L+			CPU POWER
M			CPU COMMON
35B	1A		QO.0 PUMP NO.1 CALL TO RUN
38B	1A		QO.1 PUMP NO.2 CALL TO RUN
41B	1A		QO.2 PUMP NO.3 CALL TO RUN
44B	1A		QO.3 SPARE
47B	1A		QO.4 SPARE
13B		50mA	AIO.0 PRIMARY WET WELL LEVEL TRANSMITTER
13AB			
13GB			
L+			CPU POWER
M			CPU COMMON
14B		50mA	AIO.2 BACKUP WET WELL LEVEL TRANSMITTER
14AB			
14GB			
L+			CPU POWER
M			CPU COMMON
13		50mA	AI0.0 PRIMARY WET WELL LEVEL TRANSMITTER
13A			
13G			
14		50mA	AI0.2 BACKUP WET WELL LEVEL TRANSMITTER
14A			
14G			

LEGEND

- △ DEVICE OR FIELD TERMINAL LOCATED AT MOTOR
- ✳ DEVICE OR FIELD TERMINAL LOCATED REMOTE
- □ DEVICE OR FIELD TERMINAL LOCATED AT MCC/POWER PANEL
- ■ FIELD TERMINAL LOCATED AT CONTROL PANEL
- ▲ REMOTE TERMINAL
- ● DEVICE TERMINAL NO.
- ◆ PLC INTERFACE TERMINAL

GENERAL NOTES:

1. NO ELECTRICAL MATERIAL, APPARATUS, DEVICES, APPLIANCES, FIXTURES, OR EQUIPMENT SHALL BE SOLD OR INSTALLED IN THE CITY UNLESS THEY ARE IN CONFORMANCE WITH THE PROVISIONS OF SECTION 508 CITY OF HOUSTON ELECTRICAL CODE, THE LAWS OF THE STATE OF TEXAS AND ANY APPLICABLE RULES AND REGULATIONS ISSUED UNDER THE AUTHORITY OF THE STATE STATUES. THE MAKER'S NAME, TRADEMARK, OR OTHER IDENTIFICATION SYMBOL SHALL BE PLACED ON ALL ELECTRICAL MATERIALS, APPARATUS, DEVICES, APPLIANCES, FIXTURES, AND EQUIPMENT USED OR INSTALLED UNDER THE PROVISIONS OF THIS CODE. ALL ELECTRICAL MATERIALS AND EQUIPMENT SHALL BE LISTED AND LABELED FOR THE INTENDED USE AND SHALL BE INCLUDED IN A LIST PUBLISHED BY AN APPROVAL AGENCY.

FOR INTERIM REVIEW
ONLY NOT INTENDED FOR
PERMIT, BIDDING OR
CONSTRUCTION PURPOSES.
ENGINEER:
HOSS FOROUZAN
P.E. SERIAL NO.77748
05/18/2026

GAI
Gupta & Associates, Inc.
CONSULTING ENGINEERING
Registration No. F-2593
302 Dennis St.,
Houston, Texas 77006
Tel: 713-636-2916
Fax: 713-636-2987
email: hforouzan@gaiconsulting.com

IDS Engineering Group
13430 NW. Freeway
Suite 700
Houston, Tx. 77040
713.462.3178
TxEng Firm 2726
TxSurv Firm 10110700

CITY OF HOUSTON
HOUSTON PUBLIC WORKS

LIFT STATION RENEWAL AND REPLACEMENT FY 2023

SOUTHPOINT LIFT STATION CONTROL PANEL CONTROL WIRING DIAGRAM—II

WBS NUMBER	FOR CITY OF HOUSTON USE ONLY
R-000267-0179-4	
DRAWING SCALE	
HORIZ: NONE VERT: NONE	
CITY OF HOUSTON PM	
NAWARAJ PANTA, P.E.	
SHEET NO. 108 OF 361	

DWG. NO. SPT-I-09

IDS JOB No. 0057-085-00

PLOTTED: 5/12/2026 9:03 PM

FILE PATH: O:\H8108_Lift Station Rehabilitation And Reconstruction (IDS)\6 Drawings\Instrumentation And Control\Working\South Point\H8108_SPT-I-10.dwg

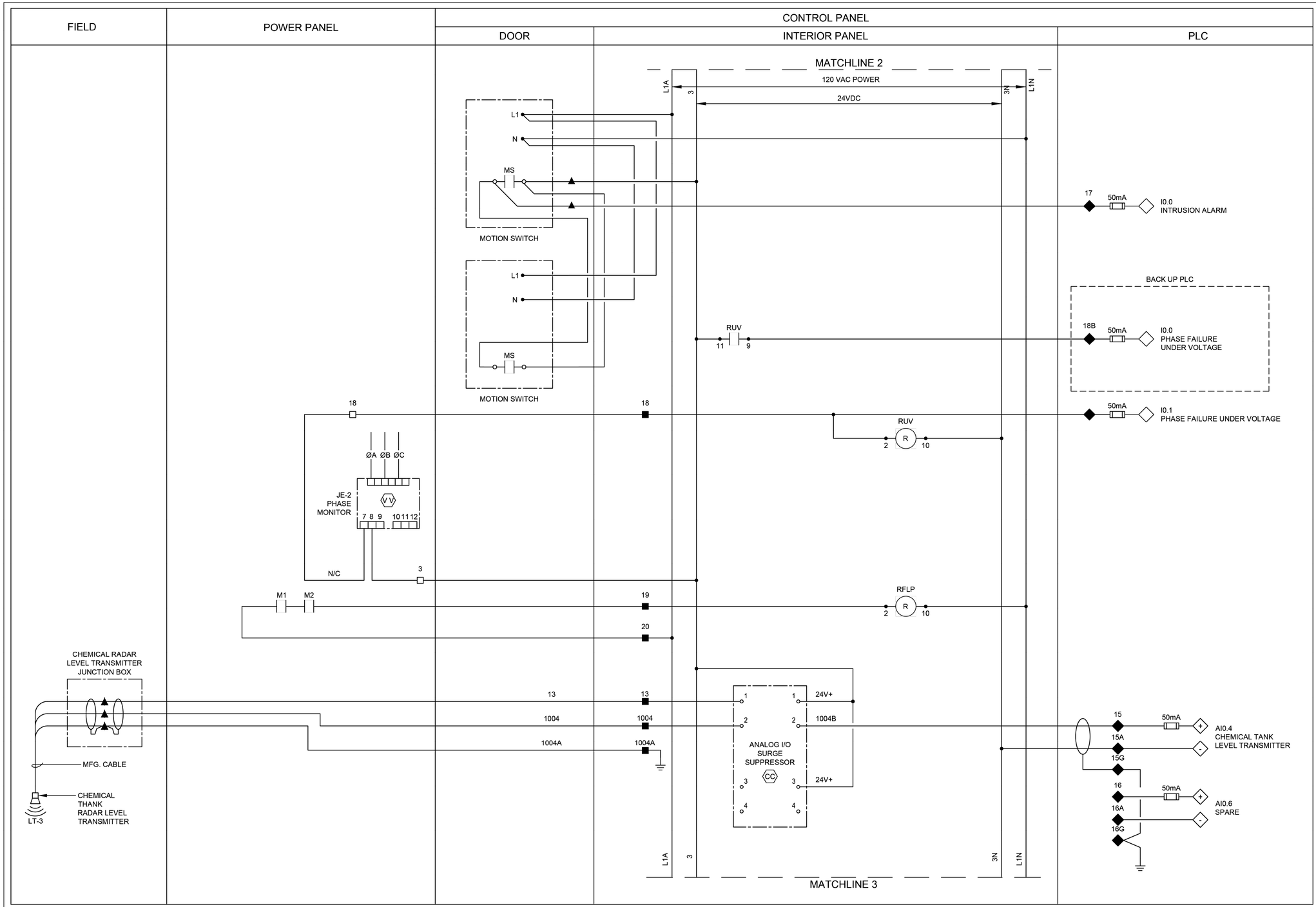

GENERAL NOTES:

1. NO ELECTRICAL MATERIAL, APPARATUS, DEVICES, APPLIANCES, FIXTURES, OR EQUIPMENT SHALL BE SOLD OR INSTALLED IN THE CITY UNLESS THEY ARE IN CONFORMANCE WITH THE PROVISIONS OF SECTION 508 CITY OF HOUSTON ELECTRICAL CODE, THE LAWS OF THE STATE OF TEXAS AND ANY APPLICABLE RULES AND REGULATIONS ISSUED UNDER THE AUTHORITY OF THE STATE STATUES. THE MAKER'S NAME, TRADEMARK, OR OTHER IDENTIFICATION SYMBOL SHALL BE PLACED ON ALL ELECTRICAL MATERIALS, APPARATUS, DEVICES, APPLIANCES, FIXTURES, AND EQUIPMENT USED OR INSTALLED UNDER THE PROVISIONS OF THIS CODE. ALL ELECTRICAL MATERIALS AND EQUIPMENT SHALL BE LISTED AND LABELED FOR THE INTENDED USE AND SHALL BE INCLUDED IN A LIST PUBLISHED BY AN APPROVAL AGENCY.

LEGEND

- △ DEVICE OR FIELD TERMINAL LOCATED AT MOTOR
- ✳ DEVICE OR FIELD TERMINAL LOCATED REMOTE
- □ DEVICE OR FIELD TERMINAL LOCATED AT MCC/POWER PANEL
- ■ FIELD TERMINAL LOCATED AT CONTROL PANEL
- ▲ REMOTE TERMINAL
- ● DEVICE TERMINAL NO.
- ◆ PLC INTERFACE TERMINAL

NO.	DATE	REVISION	APP.

FOR INTERIM REVIEW
ONLY NOT INTENDED FOR
PERMIT, BIDDING OR
CONSTRUCTION PURPOSES.
ENGINEER:
HOSS FOROUZAN
P.E. SERIAL NO.77748
05/18/2026

GAI
Gupta & Associates, Inc.
CONSULTING ENGINEERING
Registration No. F-2593
302 Dennis St.,
Houston, Texas 77006
Tel: 713-636-2936
Fax: 713-636-2987
email: hforouzan@gaiconsulting.com

IDS Engineering Group
13430 NW. Freeway
Suite 700
Houston, Tx. 77040
713.462.3178
TxEng Firm 2726
TxSurv Firm 10110700

CITY OF HOUSTON
HOUSTON PUBLIC WORKS

LIFT STATION RENEWAL
AND REPLACEMENT FY 2023

SOUTHPOINT LIFT STATION CONTROL PANEL CONTROL WIRING DIAGRAM–III

WBS NUMBER	FOR CITY OF HOUSTON USE ONLY
R–000267–0179–4	
DRAWING SCALE	
HORIZ: NONE VERT: NONE	
CITY OF HOUSTON PM	
NAWARAJ PANTA, P.E.	
SHEET NO. 109 OF 361	

DWG. NO.
SPT–I–10

IDS JOB No. 0057-085-00

PLOTTED: 5/12/2026 9:04 PM

FILE PATH: O:\H8108_Lift Station Rehabilitation And Reconstruction (IDS)\6 Drawings\Instrumentation And Control\Working\South Point\H8108_SPT-I-11.dwg

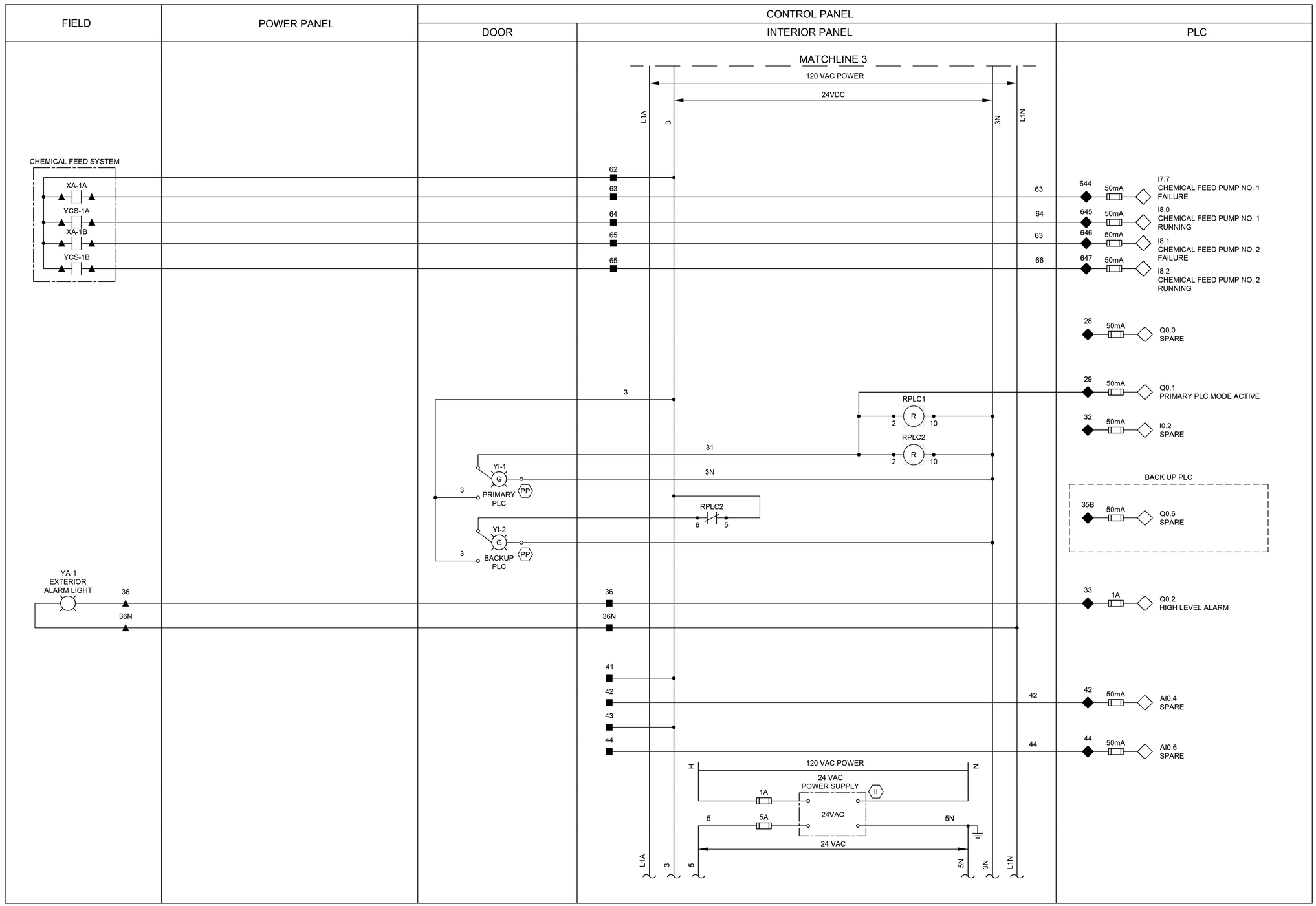

LEGEND

- △ DEVICE OR FIELD TERMINAL LOCATED AT MOTOR
- ✳ DEVICE OR FIELD TERMINAL LOCATED REMOTE
- □ DEVICE OR FIELD TERMINAL LOCATED AT MCC/POWER PANEL
- ■ FIELD TERMINAL LOCATED AT CONTROL PANEL
- ▲ REMOTE TERMINAL
- ● DEVICE TERMINAL NO.
- ◆ PLC INTERFACE TERMINAL

GENERAL NOTES:

1. NO ELECTRICAL MATERIAL, APPARATUS, DEVICES, APPLIANCES, FIXTURES, OR EQUIPMENT SHALL BE SOLD OR INSTALLED IN THE CITY UNLESS THEY ARE IN CONFORMANCE WITH THE PROVISIONS OF SECTION 508 CITY OF HOUSTON ELECTRICAL CODE, THE LAWS OF THE STATE OF TEXAS AND ANY APPLICABLE RULES AND REGULATIONS ISSUED UNDER THE AUTHORITY OF THE STATE STATUES. THE MAKER'S NAME, TRADEMARK, OR OTHER IDENTIFICATION SYMBOL SHALL BE PLACED ON ALL ELECTRICAL MATERIALS, APPARATUS, DEVICES, APPLIANCES, FIXTURES, AND EQUIPMENT USED OR INSTALLED UNDER THE PROVISIONS OF THIS CODE. ALL ELECTRICAL MATERIALS AND EQUIPMENT SHALL BE LISTED AND LABELED FOR THE INTENDED USE AND SHALL BE INCLUDED IN A LIST PUBLISHED BY AN APPROVAL AGENCY.

NO.	DATE	REVISION	APP.

FOR INTERIM REVIEW
ONLY NOT INTENDED FOR
PERMIT, BIDDING OR
CONSTRUCTION PURPOSES.
ENGINEER:
HOSS FOROUZAN
P.E. SERIAL NO.77748
05/18/2026

GAI
Gupta & Associates, Inc.
CONSULTING ENGINEERING
Registration No. F-2593
302 Dennis St.,
Houston, Texas 77006
Tel: 713-636-2936
Fax: 713-636-2987
email: hforouzan@gaiconsulting.com

IDS Engineering Group
13430 NW. Freeway
Suite 700
Houston, Tx. 77040
713.462.3178
TxEng Firm 2726
TxSurv Firm 10110700

CITY OF HOUSTON
HOUSTON PUBLIC WORKS

LIFT STATION RENEWAL AND REPLACEMENT FY 2023

SOUTHPOINT LIFT STATION CONTROL PANEL CONTROL WIRING DIAGRAM–IV

WBS NUMBER	FOR CITY OF HOUSTON USE ONLY
R–000267–0179–4	
DRAWING SCALE	
HORIZ: NONE VERT: NONE	
CITY OF HOUSTON PM	
NAWARAJ PANTA, P.E.	
DWG. NO. SPT–I–11	SHEET NO. 110 OF 361

IDS JOB No. 0057-085-00

PLOTTED: 5/12/2026 9:04 PM

FILE PATH: O:\H8108_Lift Station Rehabilitation And Reconstruction (IDS)\6 Drawings\Instrumentation And Control\Working\South Point\H8108_SPT-I-12.dwg

FIELD | POWER PANEL | CONTROL PANEL: DOOR | CONTROL PANEL: INTERIOR PANEL | PLC

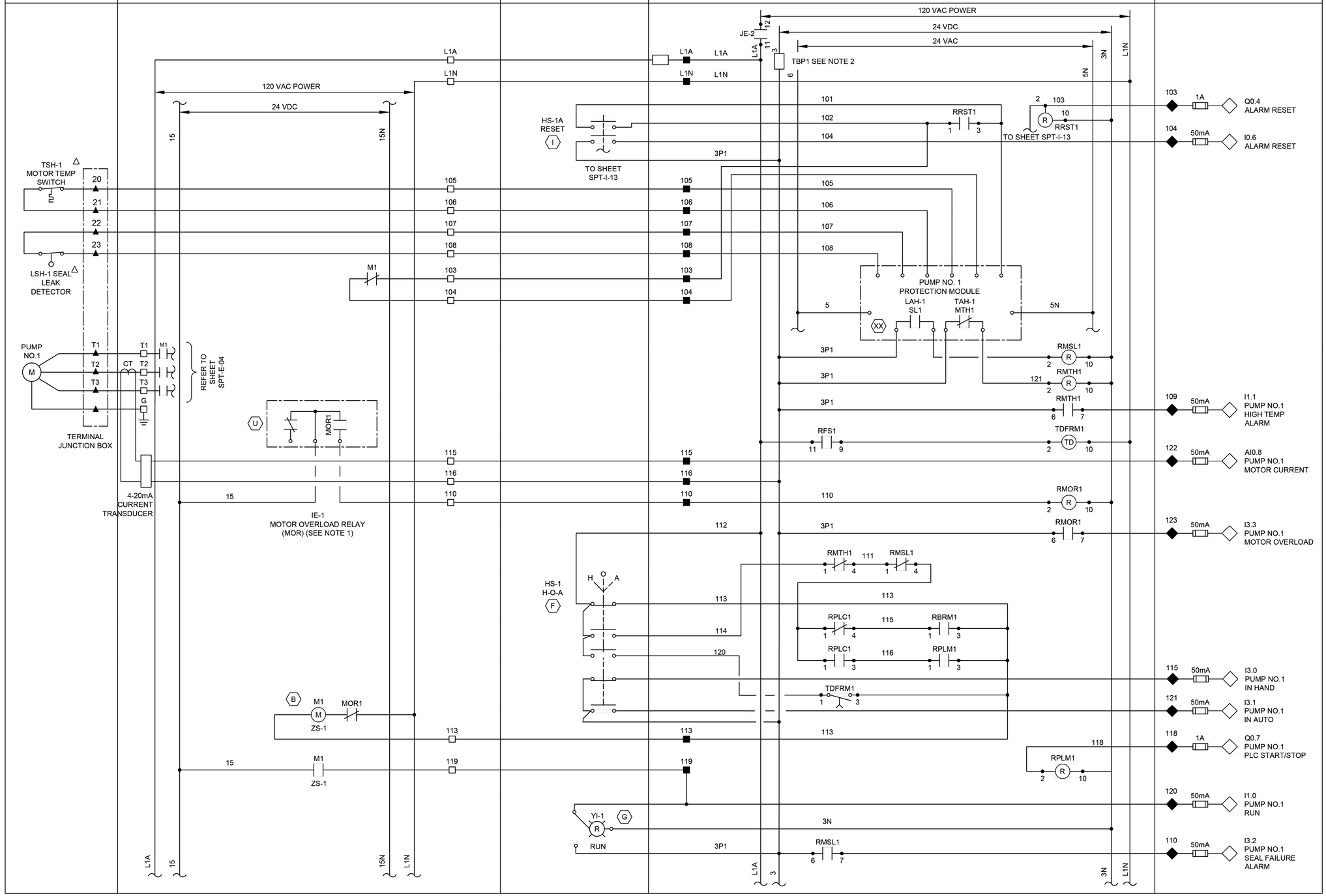

NOTES:

1. MOTOR OVERLOAD RELAY OUTPUT CONTACT SHOWN NORMALLY CLOSED WHEN RELAY IS DE-ENERGIZED, OPEN WHEN ENERGIZED, AND CLOSED WHEN IN ALARM. VERIFY OPERATION OF RELAY PROVIDED AND ADJUST CONNECTION OF RMOR AUXILIARY RELAYS.
2. FUSED TERMINAL ON TERMINAL BLOCK TB4 SEE CONTROL POWER AND COMMUNICATION WIRING DIAGRAM DRAWING NO. SPT-I-3.
3. ALL FLOAT CONTROL CIRCUIT WIRES COLOR SHALL BE YELLOW.

GENERAL NOTES:

1. NO ELECTRICAL MATERIAL, APPARATUS, DEVICES, APPLIANCES, FIXTURES, OR EQUIPMENT SHALL BE SOLD OR INSTALLED IN THE CITY UNLESS THEY ARE IN CONFORMANCE WITH THE PROVISIONS OF SECTION 508 CITY OF HOUSTON ELECTRICAL CODE, THE LAWS OF THE STATE OF TEXAS AND ANY APPLICABLE RULES AND REGULATIONS ISSUED UNDER THE AUTHORITY OF THE STATE STATUES. THE MAKER'S NAME, TRADEMARK, OR OTHER IDENTIFICATION SYMBOL SHALL BE PLACED ON ALL ELECTRICAL MATERIALS, APPARATUS, DEVICES, APPLIANCES, FIXTURES, AND EQUIPMENT USED OR INSTALLED UNDER THE PROVISIONS OF THIS CODE. ALL ELECTRICAL MATERIALS AND EQUIPMENT SHALL BE LISTED AND LABELED FOR THE INTENDED USE AND SHALL BE INCLUDED IN A LIST PUBLISHED BY AN APPROVAL AGENCY.

LEGEND

- △ DEVICE OR FIELD TERMINAL LOCATED AT MOTOR
- ✳ DEVICE OR FIELD TERMINAL LOCATED REMOTE
- □ DEVICE OR FIELD TERMINAL LOCATED AT MCC/POWER PANEL
- ■ FIELD TERMINAL LOCATED AT CONTROL PANEL
- ▲ REMOTE TERMINAL
- ● DEVICE TERMINAL NO.
- ◆ PLC INTERFACE TERMINAL

NO.	DATE	REVISION	APP.

FOR INTERIM REVIEW
ONLY NOT INTENDED FOR
PERMIT, BIDDING OR
CONSTRUCTION PURPOSES.
ENGINEER:
HOSS FOROUZAN
P.E. SERIAL NO.77748
05/18/2026

GAI
Gupta & Associates, Inc.
CONSULTING ENGINEERING
Registration No. F-2593
302 Dennis St.,
Houston, Texas 77006
Tel: 713-636-2936
Fax: 713-636-2987
email: hforouzan@gaiconsulting.com

IDS Engineering Group
13430 NW. Freeway
Suite 700
Houston, Tx. 77040
713.462.3178
TxEng Firm 2726
TxSurv Firm 10110700

CITY OF HOUSTON
HOUSTON PUBLIC WORKS

LIFT STATION RENEWAL AND REPLACEMENT FY 2023

SOUTHPOINT LIFT STATION PUMP NO.1 CONTROL WIRING DIAGRAM

WBS NUMBER	FOR CITY OF HOUSTON USE ONLY
R-000267-0179-4	
DRAWING SCALE	
HORIZ: NONE VERT: NONE	
CITY OF HOUSTON PM	
NAWARAJ PANTA, P.E.	
DWG. NO. SPT-I-12	SHEET NO. 111 OF 361

IDS JOB No. 0057-085-00

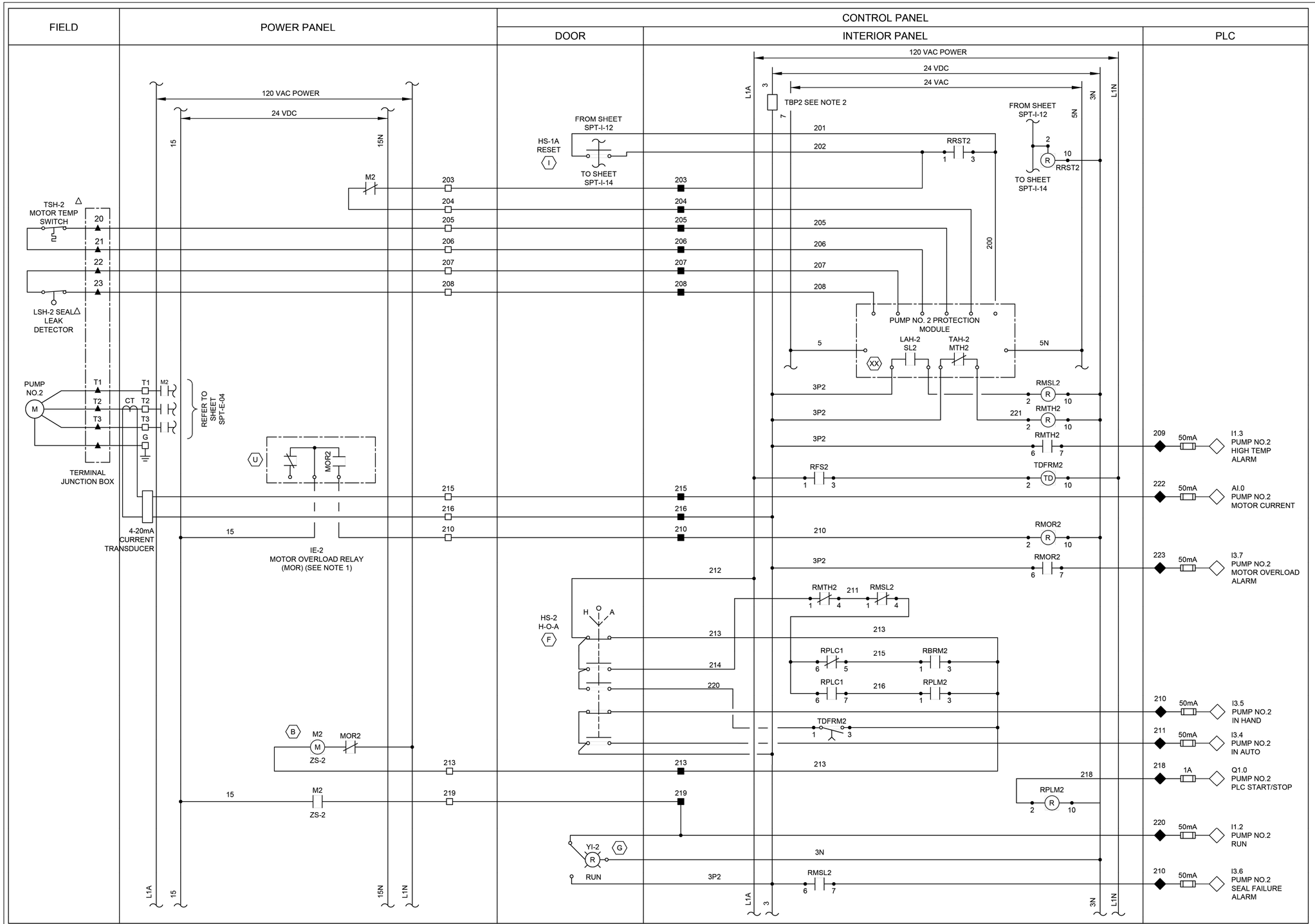

NOTES:

1. MOTOR OVERLOAD RELAY OUTPUT CONTACT SHOWN NORMALLY CLOSED WHEN RELAY IS DE-ENERGIZED, OPEN WHEN ENERGIZED, AND CLOSED WHEN IN ALARM. VERIFY OPERATION OF RELAY PROVIDED AND ADJUST CONNECTION OF RMOR AUXILIARY RELAYS.
2. FUSED TERMINAL ON TERMINAL BLOCK TB4 SEE CONTROL POWER AND COMMUNICATION WIRING DIAGRAM DRAWING NO. SPT-I-3.
3. ALL FLOAT CONTROL CIRCUIT WIRES COLOR SHALL BE YELLOW.

GENERAL NOTES:

1. NO ELECTRICAL MATERIAL, APPARATUS, DEVICES, APPLIANCES, FIXTURES, OR EQUIPMENT SHALL BE SOLD OR INSTALLED IN THE CITY UNLESS THEY ARE IN CONFORMANCE WITH THE PROVISIONS OF SECTION 508 CITY OF HOUSTON ELECTRICAL CODE, THE LAWS OF THE STATE OF TEXAS AND ANY APPLICABLE RULES AND REGULATIONS ISSUED UNDER THE AUTHORITY OF THE STATE STATUES. THE MAKER'S NAME, TRADEMARK, OR OTHER IDENTIFICATION SYMBOL SHALL BE PLACED ON ALL ELECTRICAL MATERIALS, APPARATUS, DEVICES, APPLIANCES, FIXTURES, AND EQUIPMENT USED OR INSTALLED UNDER THE PROVISIONS OF THIS CODE. ALL ELECTRICAL MATERIALS AND EQUIPMENT SHALL BE LISTED AND LABELED FOR THE INTENDED USE AND SHALL BE INCLUDED IN A LIST PUBLISHED BY AN APPROVAL AGENCY.

FOR INTERIM REVIEW ONLY NOT INTENDED FOR PERMIT, BIDDING OR CONSTRUCTION PURPOSES.
ENGINEER:
HOSS FOROUZAN
P.E. SERIAL NO.77748
05/18/2026

GAI
Gupta & Associates, Inc.
CONSULTING ENGINEERING
Registration No. F-2593
302 Dennis St., Houston, Texas 77006
Tel: 713-636-2936
Fax: 713-636-2987
email: hforouzan@gaiconsulting.com

IDS Engineering Group
13430 NW. Freeway
Suite 700
Houston, Tx. 77040
713.462.3178
TxEng Firm 2726
TxSurv Firm 10110700

CITY OF HOUSTON
HOUSTON PUBLIC WORKS

LIFT STATION RENEWAL AND REPLACEMENT FY 2023

SOUTHPOINT LIFT STATION PUMP NO.2 CONTROL WIRING DIAGRAM

WBS NUMBER	FOR CITY OF HOUSTON USE ONLY
R-000267-0179-4	
DRAWING SCALE	
HORIZ: NONE VERT: NONE	
CITY OF HOUSTON PM	
NAWARAJ PANTA, P.E.	
SHEET NO. 112 OF 361	

DWG. NO. SP-I-13

LEGEND

- △ DEVICE OR FIELD TERMINAL LOCATED AT MOTOR
- ✳ DEVICE OR FIELD TERMINAL LOCATED REMOTE
- □ DEVICE OR FIELD TERMINAL LOCATED AT MCC/POWER PANEL
- ■ FIELD TERMINAL LOCATED AT CONTROL PANEL
- ▲ REMOTE TERMINAL
- ● DEVICE TERMINAL NO.
- ◆ PLC INTERFACE TERMINAL

NO.	DATE	REVISION	APP.

PLOTTED: 5/12/2026 9:04 PM

FILE PATH: O:\H8108_Lift Station Rehabilitation And Reconstruction (IDS)\6 Drawings\Instrumentation And Control\Working\South Point\H8108_SPT-I-13.dwg

IDS JOB No. 0057-085-00

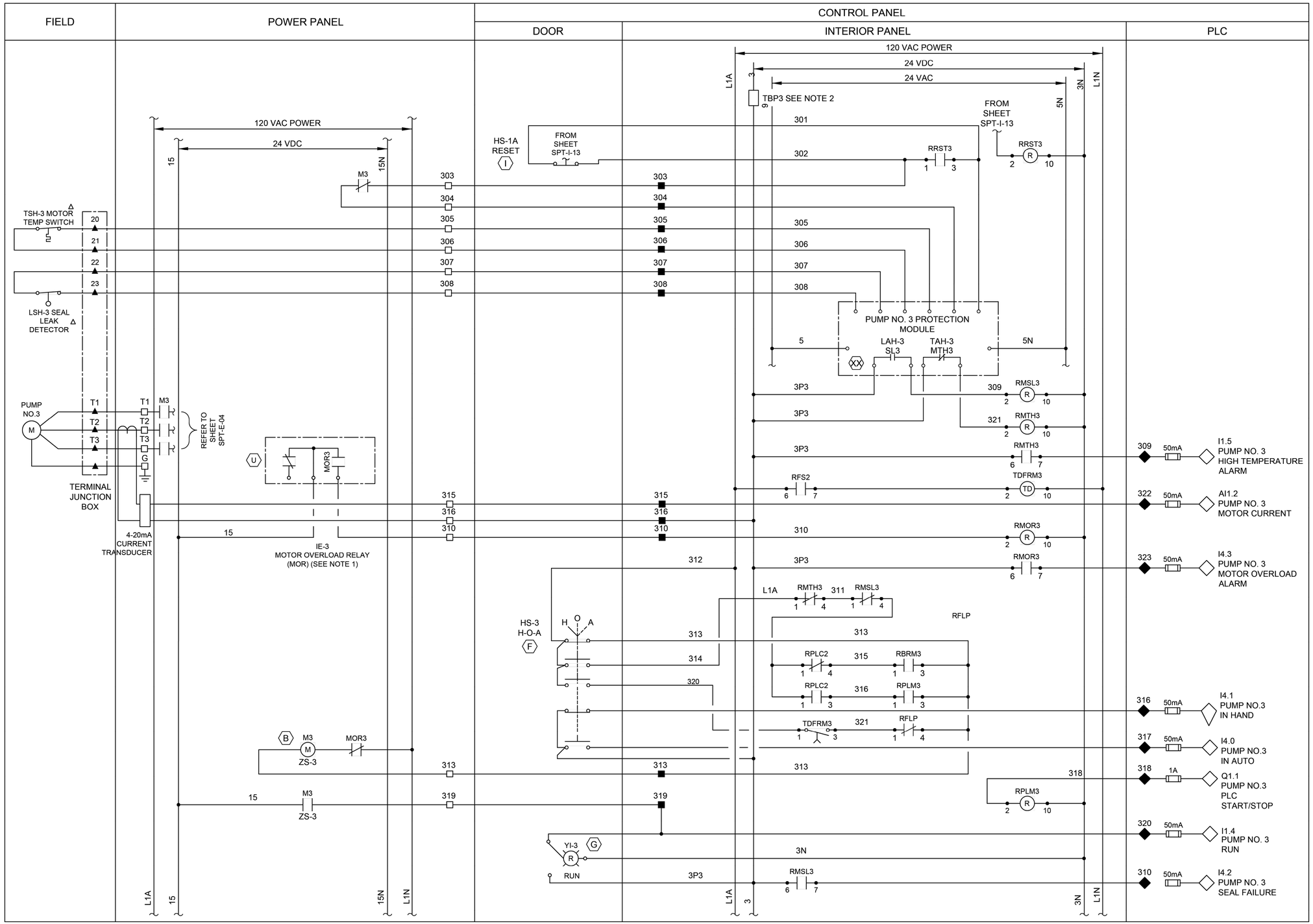

LEGEND

- △ DEVICE OR FIELD TERMINAL LOCATED AT MOTOR
- ✳ DEVICE OR FIELD TERMINAL LOCATED REMOTE
- □ DEVICE OR FIELD TERMINAL LOCATED AT MCC/POWER PANEL
- ■ FIELD TERMINAL LOCATED AT CONTROL PANEL
- ▲ REMOTE TERMINAL
- ● DEVICE TERMINAL NO.
- ◆ PLC INTERFACE TERMINAL

NOTES:

1. MOTOR OVERLOAD RELAY OUTPUT CONTACT SHOWN NORMALLY CLOSED WHEN RELAY IS DE-ENERGIZED, OPEN WHEN ENERGIZED, AND CLOSED WHEN IN ALARM. VERIFY OPERATION OF RELAY PROVIDED AND ADJUST CONNECTION OF RMOR AUXILIARY RELAYS.
2. FUSED TERMINAL ON TERMINAL BLOCK TB4 SEE CONTROL POWER AND COMMUNICATION WIRING DIAGRAM DRAWING NO. SPT-I-3.
3. ALL FLOAT CONTROL CIRCUIT WIRES COLOR SHALL BE YELLOW.

GENERAL NOTES:

1. NO ELECTRICAL MATERIAL, APPARATUS, DEVICES, APPLIANCES, FIXTURES, OR EQUIPMENT SHALL BE SOLD OR INSTALLED IN THE CITY UNLESS THEY ARE IN CONFORMANCE WITH THE PROVISIONS OF SECTION 508 CITY OF HOUSTON ELECTRICAL CODE, THE LAWS OF THE STATE OF TEXAS AND ANY APPLICABLE RULES AND REGULATIONS ISSUED UNDER THE AUTHORITY OF THE STATE STATUES. THE MAKER'S NAME, TRADEMARK, OR OTHER IDENTIFICATION SYMBOL SHALL BE PLACED ON ALL ELECTRICAL MATERIALS, APPARATUS, DEVICES, APPLIANCES, FIXTURES, AND EQUIPMENT USED OR INSTALLED UNDER THE PROVISIONS OF THIS CODE. ALL ELECTRICAL MATERIALS AND EQUIPMENT SHALL BE LISTED AND LABELED FOR THE INTENDED USE AND SHALL BE INCLUDED IN A LIST PUBLISHED BY AN APPROVAL AGENCY.

FOR INTERIM REVIEW ONLY NOT INTENDED FOR PERMIT, BIDDING OR CONSTRUCTION PURPOSES.
ENGINEER:
HOSS FOROUZAN
P.E. SERIAL NO.77748
05/18/2026

GAI
Gupta & Associates, Inc.
CONSULTING ENGINEERING
Registration No. F-2593
302 Dennis St., Houston, Texas 77006
Tel: 713-636-2936
Fax: 713-636-2987
email: hforouzan@gaiconsulting.com

IDS Engineering Group
13430 NW. Freeway
Suite 700
Houston, Tx. 77040
713.462.3178
TxEng Firm 2726
TxSurv Firm 10110700

CITY OF HOUSTON
HOUSTON PUBLIC WORKS

LIFT STATION RENEWAL AND REPLACEMENT FY 2023

SOUTHPOINT LIFT STATION PUMP NO.3 CONTROL WIRING DIAGRAM

WBS NUMBER	FOR CITY OF HOUSTON USE ONLY
R-000267-0179-4	
DRAWING SCALE	
HORIZ: NONE VERT: NONE	
CITY OF HOUSTON PM	
NAWARAJ PANTA, P.E.	
SHEET NO. 113 OF 361	

DWG. NO. SPT-I-14

NO.	DATE	REVISION	APP.

IDS JOB No. 0057-085-00

PLOTTED: 5/12/2026 9:04 PM

FILE PATH: O:\H8108_Lift Station Rehabilitation And Reconstruction (IDS)\6 Drawings\Instrumentation And Control\Working\South Point\H8108_SPT-I-14.dwg

PLOTTED: 5/14/2026 3:33 PM

FILE PATH: \\idseg.com\FS\Projects\0000\005708500 CoH Lift Stations - FY 2023\CAD\DWG\PRODUCTION\114-SCOTT No 3 OVERALL SITE PLAN.dwg

LEGEND

- EXISTING CONCRETE PAVEMENT
- EXISTING CONCRETE SIDEWALK
- LIDAR CONTOUR DATED 2018

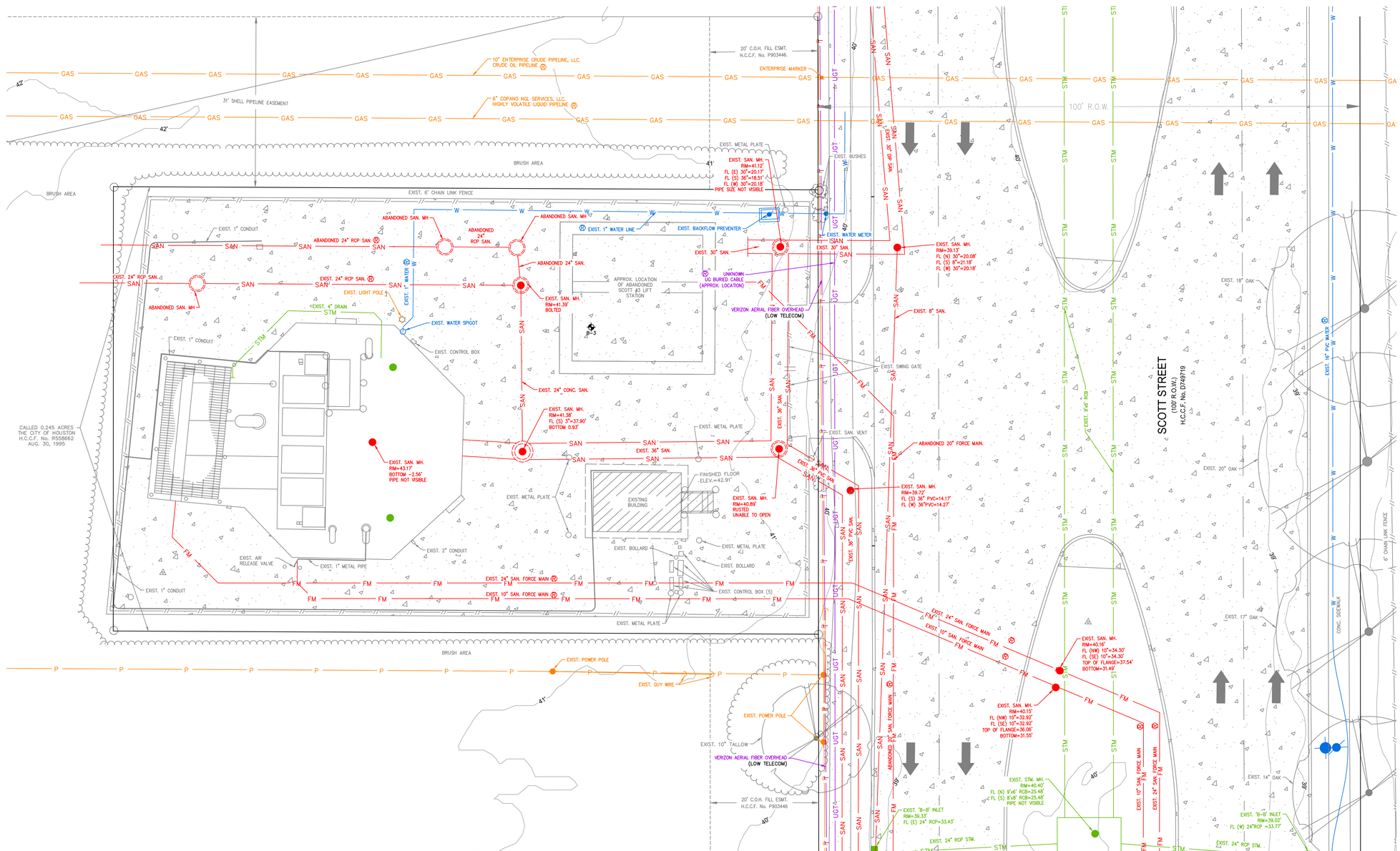

10' 0' 10'
SCALE
1" = 10'

N W E S

BENCHMARK:

CITY OF HOUSTON MONUMENT 5452-7313 IS A BRASS DISC IN CONCRETE STAMPED 030070 LOCATED ON THE NORTHEAST CORNER ON AIRPORT BLVD. BRIDGE APPROXIMATELY 0.1 MILE EAST FROM THE INTERSECTION OD SCOTT STREET IN KEY MAP NO. 573G IN THE SIMS BAYOU WATERSHED.

ELEV. 43.59 FEET NAVD 1988, 2001 ADJUSTMENT (PROJECT DATUM)
ELEV. 43.70 FEET NAVD 1988, (GEOID 18')

FLOODPLAIN NOTE:

AS PER FIRM PANEL 48201C0890M DATED MAY 2, 2019. THIS TRACT LIES WITHIN THE 500-YEAR FLOODPLAIN.
100-YR FLOODPLAIN ELEV. 38.00'
500-YR FLOODPLAIN ELEV. 42.00'
FIRM PANEL: 48201C0890M

T.B.M #41:

SET 5/8" I.R. W/CAP LOCATED ON MEDIAN NOSE ON SCOTT ST. APPROX. 400 FT NORTH FROM THE INTERSECTION OF SOUTH ACRES DRIVE
ELEV.= 39.76 FT.

EXISTING UTILITY NOTE:

EXISTING UNDERGROUND UTILITY INFORMATION (TYPE, SIZE & OWNERSHIP) ARE SHOWN APPROXIMATELY BASED ON THE AVAILABLE RECORD DRAWINGS AND FIELD VERIFICATION (WHERE FEASIBLE) WITHOUT PROBING AND EXCAVATION. NO WARRANTY IS MADE AS TO THE ACCURACY OR COMPLETENESS OF UTILITY LOCATION SHOWN ON THE DRAWING. CAUTION SHOULD BE EXERCISED WHEN EXCAVATING OR BORE AND JACKING IN THE VICINITY OF UNDERGROUND UTILITIES. OWNERS OF THE UTILITIES SHOULD BE NOTIFIED PRIOR TO SUCH ACTIVITIES. CALL UTILITY COORDINATING COMMITTEE AT 713-223-4567, AT LEAST 48 HOURS PRIOR TO EXCAVATING IN THE STREET RIGHT-OF-WAY.

NO.	DATE	REVISION	APP.

NOTICE:

FOR YOUR SAFETY, YOU ARE REQUIRED BY TEXAS LAW TO CALL 811 AT LEAST 48 HOURS BEFORE YOU DIG SO THAT UNDERGROUND LINES CAN BE MARKED. THIS SIGNATURE DOES NOT FULFILL YOUR OBLIGATION TO CALL 811

VERIFICATION OF PRIVATE UTILITY LINES

Date

CenterPoint Energy natural gas utilities shown. (Gas service lines are not shown). This signature not be used for conflict verification.

Signature valid for six months.

Date

CenterPoint Energy/UNDERGROUND Electrical Facilities Verification ONLY. (This signature verifies existing underground facilities – not to be used for conflict verification)

Signature valid for six months.

Date

Approved for AT&T underground conduit facilities only.
Signature valid for one year.

IDS Engineering Group
13430 NW. Freeway, Suite 700
Houston, Tx. 77040
713.462.3178
TxEng Firm 2726 | TxSurv Firm 10110700

SURVEYED BY: KUO & ASSOCIATES, INC.
TBPE FIRM #F-4578; TBPLS FIRM #1007560

THIS DOCUMENT IS RELEASED FOR THE PURPOSE OF REVIEW UNDER THE AUTHORITY OF MARCEL KHOUW, P.E. 101807 ON 05/27/2026. IT IS NOT TO BE USED FOR CONSTRUCTION PURPOSES.

CITY OF HOUSTON
HOUSTON PUBLIC WORKS

LIFT STATION RENEWAL AND REPLACEMENT FY 2023

SCOTT NO. 3 LIFT STATION EXISTING SITE PLAN

WBS NUMBER	FOR CITY OF HOUSTON USE ONLY
R-000267-0179-4	
DRAWING SCALE	
HORIZ: 1" = 10' VERT: N/A	
CITY OF HOUSTON PM	
NAWARAJ PANTA, P.E.	
DWG. NO. SCT-C-01	SHEET NO. 114 OF 361

PLOTTED: 5/14/2026 3:33 PM

LEGEND

- EXISTING CONCRETE PAVEMENT
- REMOVE EXISTING CONCRETE PAVEMENT
- SITE DEMOLITION
- EXISTING CONCRETE SIDEWALK
- REMOVE EXISTING CONCRETE SIDEWALK
- LIFT STATION AND BUILDING DEMOLITION
- ABANDON ANY UNDERGROUND UTILITY
- REMOVE ANY UNDERGROUND UTILITY
- REMOVE EXISTING FENCE
- FILTER FABRIC FENCE
- CTW — CONCRETE TRUCK WASHOUT
  * CONTRACTOR TOO PLACE CTW AS NECESSARY WITHIN COH PROPERTY OR EASEMENTS AS APPROVED BY PROJECT MANAGER

NOTES:

1. EXISTING LIFT STATION WET WELL TO REMAIN.
2. SEE ELECTRICAL PLANS ON DWG. NO.'S SCT-E-01 THROUGH SCT-I-18 FOR ELECTRICAL IMPROVEMENTS.
3. CONTRACTOR SHALL COORDINATE WITH CENTERPOINT ENERGY TO DE-ENERGIZE THE LIFT STATION AND OTHER ELECTRICAL EQUIPMENT ON SITE.
4. CONTRACTOR SHALL PROTECT THE EXISTING CONDUIT AND CABLE. IF CABLE OR CONDUIT IS DAMAGED CONTRACTOR SHALL REPLACE AT NO ADDITIONAL COST TO THE CITY.
5. REMOVE DAMAGED AND CRACKED SIDEWALK.
6. REMOVE THE EXISTING FORCE MAIN TO THE NEAREST PIPE JOINT AND TIE PROPOSED FORCE MAIN TO EXISTING USING RESTRAINED JOINTS.
7. THE EXISTING FORCE MAIN IS ASSUMED TO BE DUCTILE IRON BELL AND SPIGOT AND SHALL BE FIELD VERIFIED BY THE CONTRACTOR.
8. THE CITY OF HOUSTON WILL RETAIN SALVAGE RIGHTS TO ALL MATERIAL AND EQUIPMENT. ALL MATERIALS AND EQUIPMENT RETAINED BY THE CITY OF HOUSTON SHALL BE DELIVERED TO A POINT DESIGNATED BY CITY OF HOUSTON REPRESENTATIVE (MR. ARTURO CARRILLO 832-395-3558). ANY MATERIAL OR EQUIPMENT NOT RETAINED BY THE CITY OF HOUSTON SHALL BE REMOVED FROM THE SITE AND DISPOSED OF BY THE CONTRACTOR IN ACCORDANCE WITH APPLICABLE REGULATIONS.
9. THE SOUND PRODUCED BY THE ERECTION, EXCAVATION, CONSTRUCTION, OR DEMOLITION OF ANY BUILDING OR STRUCTURE, INCLUDING THE USE OF ANY NECESSARY TOOLS OR EQUIPMENT, CONDUCTED BETWEEN THE HOURS OF 7 A.M. AND 8 P.M., SHALL NOT PRODUCE A SOUND EXCEEDING 85 DB(A) WHEN MEASURED FROM THE PROPERTY LINE OF THE RESIDENTIAL PROPERTY WHERE THE SOUND IS BEING RECEIVED.
10. CONTRACTOR TO SAW-CUT, REMOVE, AND REPLACE CONCRETE AS NECESSARY. NO SEPARATE PAY.
11. ABANDONED LIFE STATION STRUCTURE BELOW GRADE. CONTRACTOR TO REMOVE AS NECESSARY, NO SEPARATE PAY. SEE DWG. NO. SCT-C-03 FOR REFERENCE.
12. FOR REQUIRED STORMWATER POLLUTION PREVENTION PLAN MEASURES ON PROPOSED INLETS SEE DRAINAGE PLAN.

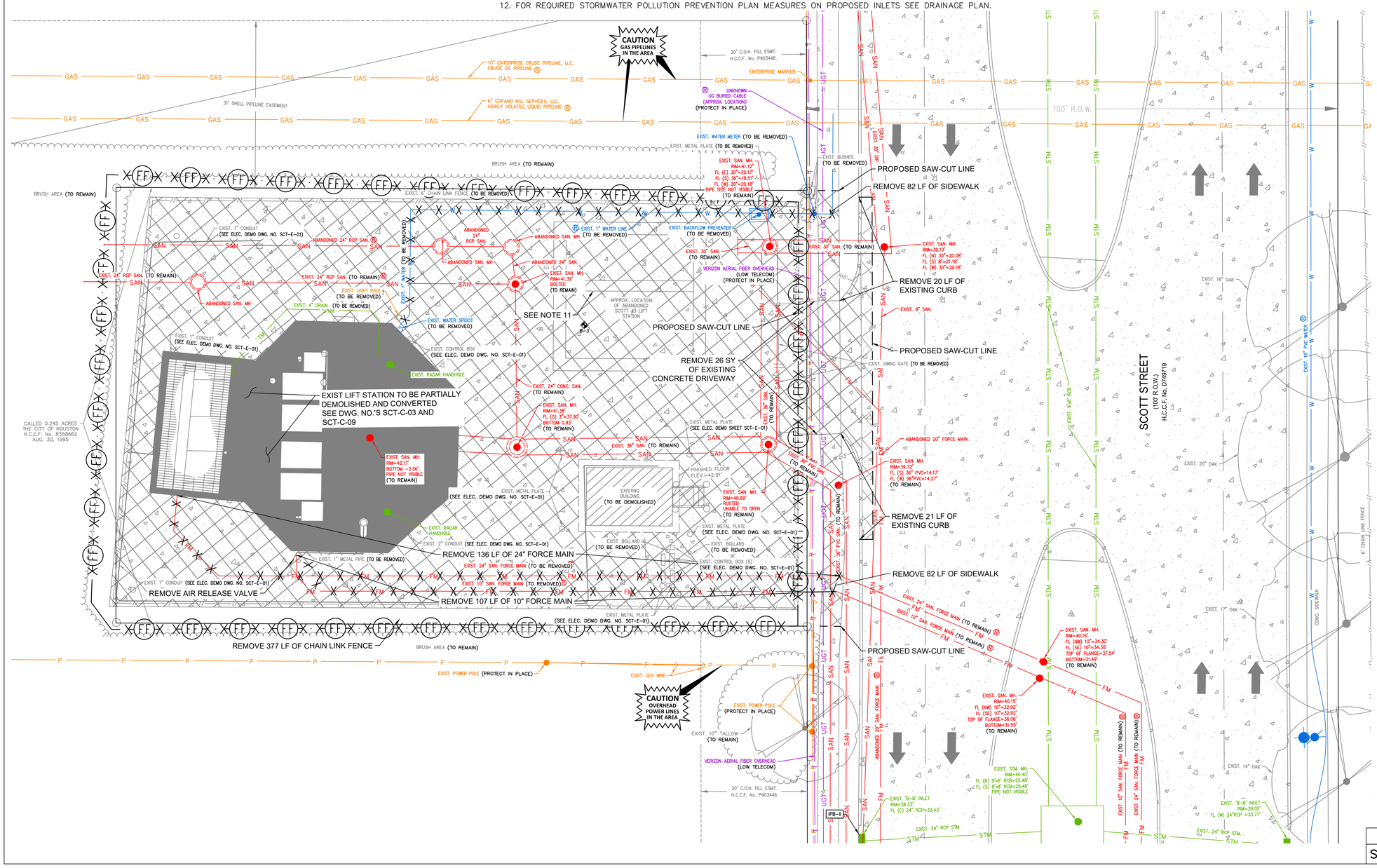

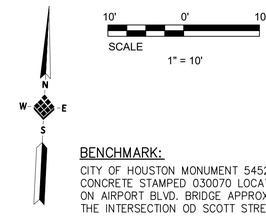

10' 0' 10'
SCALE
1" = 10'

NO.	DATE	REVISION	APP.

BENCHMARK:

CITY OF HOUSTON MONUMENT 5452-7313 IS A BRASS DISC IN CONCRETE STAMPED 030070 LOCATED ON THE NORTHEAST CORNER ON AIRPORT BLVD. BRIDGE APPROXIMATELY 0.1 MILE EAST FROM THE INTERSECTION OD SCOTT STREET IN KEY MAP NO. 573G IN THE SIMS BAYOU WATERSHED.

ELEV. 43.59 FEET NAVD 1988, 2001 ADJUSTMENT (PROJECT DATUM)
ELEV. 43.70 FEET NAVD 1988, (GEOID 18')

FLOODPLAIN NOTE:

AS PER FIRM PANEL 48201C0890M DATED MAY 2, 2019. THIS TRACT LIES WITHIN THE 500-YEAR FLOODPLAIN.
100-YR FLOODPLAIN ELEV. 38.00'
500-YR FLOODPLAIN ELEV. 42.00'
FIRM PANEL: 48201C0890M

T.B.M #41:

SET 5/8" I.R. W/CAP LOCATED ON MEDIAN NOSE ON SCOTT ST. APPROX. 400 FT NORTH FROM THE INTERSECTION OF SOUTH ACRES DRIVE
ELEV.= 39.76 FT.

EXISTING UTILITY NOTE:

EXISTING UNDERGROUND UTILITY INFORMATION (TYPE, SIZE & OWNERSHIP) ARE SHOWN APPROXIMATELY BASED ON THE AVAILABLE RECORD DRAWINGS AND FIELD VERIFICATION (WHERE FEASIBLE) WITHOUT PROBING AND EXCAVATION. NO WARRANTY IS MADE AS TO THE ACCURACY OR COMPLETENESS OF UTILITY LOCATION SHOWN ON THE DRAWING. CAUTION SHOULD BE EXERCISED WHEN EXCAVATING OR BORE AND JACKING IN THE VICINITY OF UNDERGROUND UTILITIES. OWNERS OF THE UTILITIES SHOULD BE NOTIFIED PRIOR TO SUCH ACTIVITIES. CALL UTILITY COORDINATING COMMITTEE AT 713-223-4567, AT LEAST 48 HOURS PRIOR TO EXCAVATING IN THE STREET RIGHT-OF-WAY.

NOTICE:
FOR YOUR SAFETY, YOU ARE REQUIRED BY TEXAS LAW TO CALL 811 AT LEAST 48 HOURS BEFORE YOU DIG SO THAT UNDERGROUND LINES CAN BE MARKED. THIS SIGNATURE DOES NOT FULFILL YOUR OBLIGATION TO CALL 811

VERIFICATION OF PRIVATE UTILITY LINES

Date

CenterPoint Energy natural gas utilities shown. (Gas service lines are not shown). This signature not be used for conflict verification.

Signature valid for six months.

Date

CenterPoint Energy/UNDERGROUND Electrical Facilities Verification ONLY. (This signature verifies existing underground facilities – not to be used for conflict verification)

Signature valid for six months.

Date

Approved for AT&T underground conduit facilities only.
Signature valid for one year.

IDS Engineering Group
13430 NW. Freeway, Suite 700
Houston, Tx. 77040
713.462.3178
TxEng Firm 2726 | TxSurv Firm 10110700

SURVEYED BY: KUO & ASSOCIATES, INC.
TBPE FIRM #F-4578; TBPLS FIRM #1007560

THIS DOCUMENT IS RELEASED FOR THE PURPOSE OF REVIEW UNDER THE AUTHORITY OF MARCEL KHOUW, P.E. 101807 ON 05/27/2026. IT IS NOT TO BE USED FOR CONSTRUCTION PURPOSES.

CITY OF HOUSTON
HOUSTON PUBLIC WORKS

LIFT STATION RENEWAL AND REPLACEMENT FY 2023

SCOTT NO. 3 LIFT STATION SITE DEMOLITION PLAN AND SWPPP

WBS NUMBER	FOR CITY OF HOUSTON USE ONLY
R-000267-0179-4	
DRAWING SCALE	
HORIZ: 1" = 10' VERT: N/A	
CITY OF HOUSTON PM	
NAWARAJ PANTA, P.E.	
DWG. NO. SCT-C-02	SHEET NO. 115 OF 361

FILE PATH: \\tdseg.com\FS\Projects\0000\005708500 CoH Lift Stations - FY 2023\CAD\DWG\PRODUCTION\115-SCOTT No 3 SITE PLAN AND DEMO.dwg

PLOTTED: 5/13/2026 6:31 PM

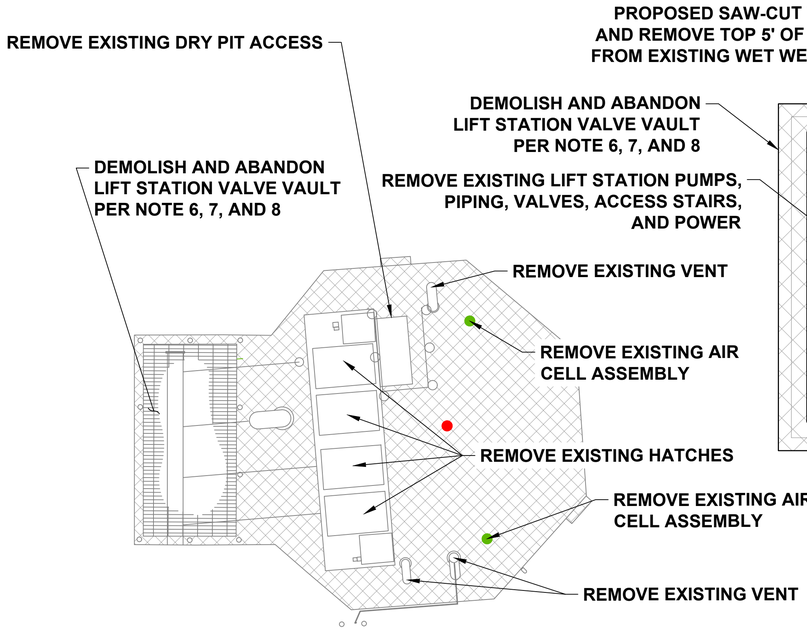

PLAN AT GRADE

N.T.S.

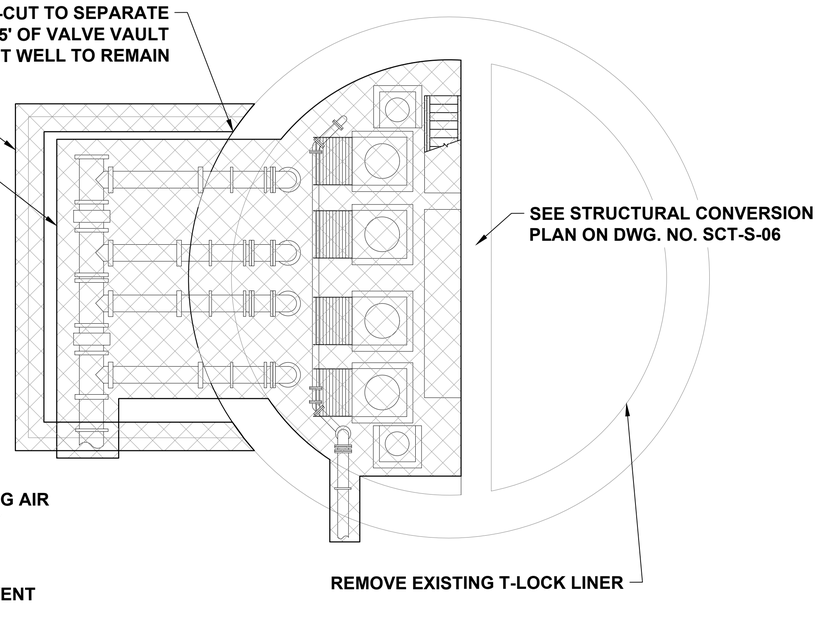

LIFT STATION PLAN

N.T.S.

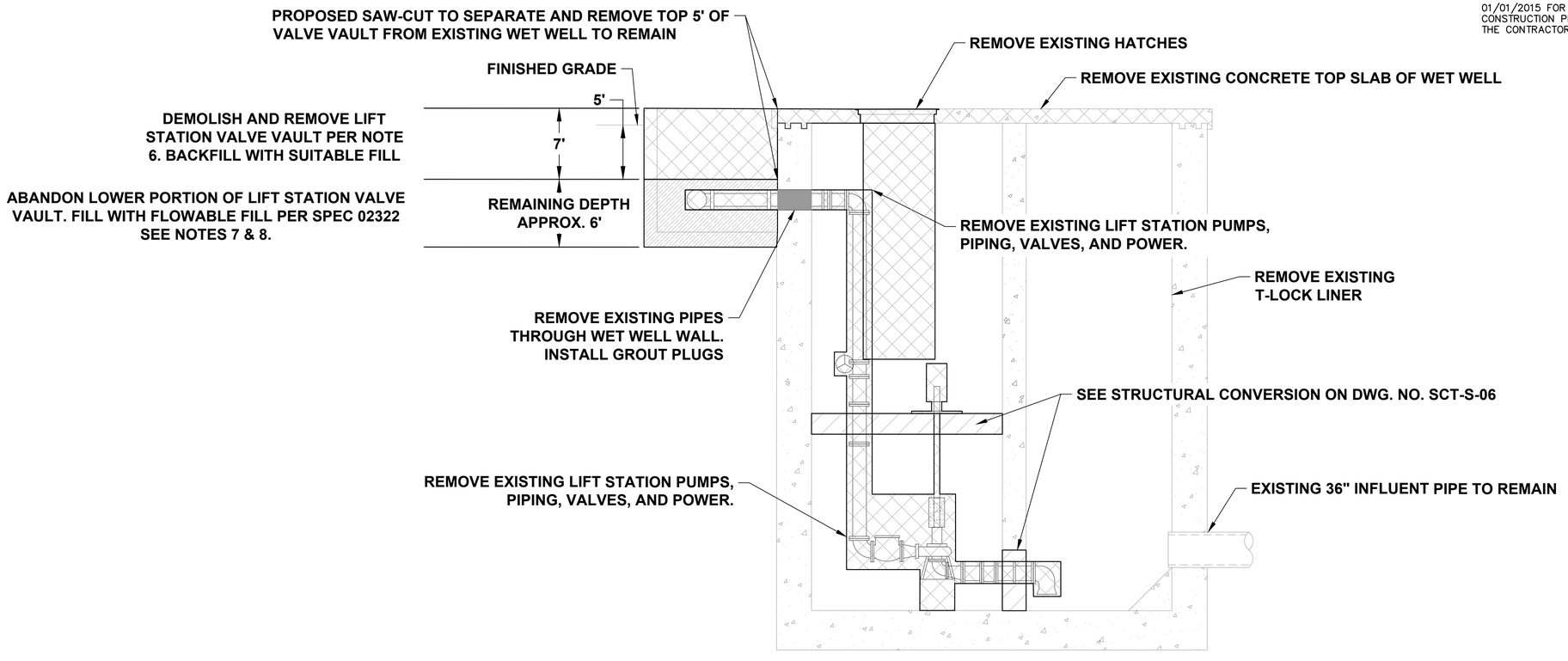

LIFT STATION SECTION

N.T.S.

LIFT STATION DEMOLITION AND ABANDONMENT NOTES:

1. THIS DRAWING IS A REPRODUCTION OF THE EXISTING LIFT STATION CONSTRUCTION DRAWINGS AND INTENDED TO PROVIDE GENERAL INFORMATION FOR STATION DEMOLITION. THE CONTRACTOR IS RESPONSIBLE FOR DETERMINING THE ACTUAL WORK REQUIRED FOR DEMOLITION AND REMOVAL OF STRUCTURAL MECHANICAL AND ELECTRICAL COMPONENTS. A CLAIM FOR CHANGED CONDITIONS BETWEEN THE EXISTING CONDITIONS AND THE RECORD DRAWINGS WILL NOT BE CONSIDERED.
2. NO DEMOLITION IS TO BE PERFORMED UNTIL BYPASS PUMPING HAS BEEN INSTALLED AND OPERATIONAL.
3. THE CITY OF HOUSTON WILL RETAIN SALVAGE RIGHTS TO ALL MATERIAL AND EQUIPMENT. ALL MATERIALS AND EQUIPMENT RETAINED BY THE CITY OF HOUSTON SHALL BE DELIVERED TO A POINT DESIGNATED BY CITY OF HOUSTON REPRESENTATIVE (MR. ARTURO CARRILLO 832-395-3558). ANY MATERIAL OR EQUIPMENT NOT RETAINED BY THE CITY OF HOUSTON SHALL BE REMOVED FROM THE SITE AND DISPOSED OF BY THE CONTRACTOR IN ACCORDANCE WITH APPLICABLE REGULATIONS.
4. WHEN REMOVING EXISTING PUMPS, CONTRACTOR SHALL LEAVE AS MUCH WIRE/CABLE AS POSSIBLE IN ORDER FOR THE CITY OF HOUSTON TO REUSE THE PUMPS.
5. CONTRACTOR SHALL NOTIFY TEXAS DEPARTMENT OF HEALTH (DEPARTMENT) ON A FORM SPECIFIED BY THE DEPARTMENT OF ANY ASBESTOS ABATEMENT ACTIVITY, RENOVATION OR OPERATIONS AND MAINTENANCE ACTIVITY AFFECTING ASBESTOS-CONTAINING BUILDING MATERIALS, OR ANY DEMOLITION IN FACILITIES OR PUBLIC BUILDINGS.
6. CONCRETE SLAB AND WALLS INDICATED ON THIS PLAN SHALL BE REMOVED TO 5-FT BELOW FINISHED GRADE AS PER SPECIFICATION SECTION 02220.
7. ALL REMAINING WALL OPENINGS IN THE VALVE VAULT SHALL BE SEALED WITH NON-SHRINK GROUT.
8. CONTRACTOR SHALL BACKFILL THE ABANDONED AND DEMOLISHED VALVE VAULT. BACKFILL SHALL BE SUITABLE FILL AND FLOWABLE FILL AS SHOWN AND COMPACTED PROPERLY UP TO THE PROPOSED CONCRETE DISCHARGE ASSEMBLY PAD.
9. THE CONTRACTOR SHALL COORDINATE WITH CENTERPOINT ENERGY TO TEMPORARILY DISCONNECT ELECTRICAL POWER AS NEEDED.
10. THE EXISTING WET WELL SHALL BE CLEANED OF ALL DEBRIS, WASTEWATER AND OTHER RESIDUES BY AN APPROVED CITY OF HOUSTON DISPOSAL CONTRACTOR.
11. THE CONTRACTOR SHALL DISPOSE OF ANY LIQUID OR SOLID WASTE FOUND IN THE WET WELL AT A DISPOSAL FACILITY LICENSED AND APPROVED BY THE STATE OF TEXAS. THE CONTRACTOR SHALL BE RESPONSIBLE FOR THE COST OF TRANSPORTATION, DISPOSAL AND TESTING REQUIRED BY STATE AND FEDERAL REGULATORY AGENCIES, AND BY THE DISPOSAL FACILITY.
12. PRIOR TO THE CLEAN-OUT AND CLEANING OF THE EXISTING LIFT STATION WET WELL, CONTRACTOR TO SUBMIT PROOF TO CITY OF HOUSTON CONSTRUCTION PM THAT TRANSPORTER/HAULER TO BE USED FOR THE TRANSPORT OF THE CONTENTS OF THE WET WELL (I.E., SOLIDS, GRIT, SEWAGE SLUDGE, AND DOMESTIC SLUDGE, ETC.) IS REGISTERED BY THE TEXAS COMMISSION ON ENVIRONMENTAL QUALITY (TCEQ) AS A SLUDGE TRANSPORTER AND THE TRANSPORTER'S REGISTRATION IS CURRENT AND VALID DURING THE PERIOD OF PERFORMANCE.
13. CONTRACTOR SHALL SUBMIT PROOF OF SUBMISSION OF REQUIRED ASBESTOS/DEMOLITION NOTIFICATION FORM TO THE TEXAS DEPARTMENT OF STATE HEALTH SERVICES TO CITY OF HOUSTON CONSTRUCTION PM. THE NOTIFICATION TO THE STATE MUST BE PROVIDED A MINIMUM OF 10 DAYS PRIOR TO THE STARTUP OF ANY DEMOLITION ACTIVITIES AT THE SITE.
14. CONTRACTOR SHALL OBTAIN CITY OF HOUSTON DEMOLITION PERMIT (SEE FORM CE 1075 REV. 01/01/2015 FOR GUIDELINES) OR SUBMIT PROOF OF NON-APPLICABILITY TO CITY OF HOUSTON CONSTRUCTION PROJECT MANAGER PRIOR TO THE STARTUP OF DEMOLITION ACTIVITIES AT THE SITE. THE CONTRACTOR SHALL OBTAIN ANY STATE DEMOLITION PERMITS REQUIRED.

NO.	DATE	REVISION	APP.

LEGEND

DEMOLITION AREA

ABANDON VALVE VAULT

IDS Engineering Group
13430 NW. Freeway, Suite 700
Houston, Tx. 77040
713.462.3178
TxEng Firm 2726 | TxSurv Firm 10110700

SURVEYED BY: KUO & ASSOCIATES, INC.
TBPE FIRM #F-4578; TBPLS FIRM #1007560

THIS DOCUMENT IS RELEASED FOR THE PURPOSE OF REVIEW UNDER THE AUTHORITY OF MARCEL KHOUW, P.E. 101807 ON 05/27/2026. IT IS NOT TO BE USED FOR CONSTRUCTION PURPOSES.

CITY OF HOUSTON
HOUSTON PUBLIC WORKS

LIFT STATION RENEWAL AND REPLACEMENT FY 2023

SCOTT NO. 3 LIFT STATION SECTION DEMOLITION

WBS NUMBER	FOR CITY OF HOUSTON USE ONLY
R-000267-0179-4	
DRAWING SCALE	
HORIZ: AS NOTED VERT: N/A	
CITY OF HOUSTON PM	
NAWARAJ PANTA, P.E.	
DWG. NO. SCT-C-03	SHEET NO. 116 OF 361

FILE PATH: \\idseg.com\FS\Projects\0000\005708500 CoH Lift Stations - FY 2023\CAD\DWG\PRODUCTION\116-SCOTT No 3 SECTION DEMO.dwg

PLOTTED: 5/14/2026 3:33 PM

NOTES:

1. EXISTING LIFT STATION WET WELL TO REMAIN.
2. SEE ELECTRICAL PLANS ON DWG. NO.'S SCT-E-01 THROUGH SCT-I-18 FOR ELECTRICAL IMPROVEMENTS.
3. CONTRACTOR SHALL COORDINATE WITH CENTERPOINT ENERGY TO DE-ENERGIZE THE LIFT STATION AND OTHER ELECTRICAL EQUIPMENT ON SITE.
4. REMOVE EXISTING T-LOCK LINER, REPAIR MANHOLE WALL AND RESTORE BENCH PER SPEC 02555. REPLACE MANHOLE FRAME, RING, AND COVER, AND RECOAT WITH A CITY OF HOUSTON APPROVED MATERIAL PER SPEC 09901.
5. DOWEL INTO EXISTING PAVEMENT. USE 24" x #4 SMOOTH DOWELS AT 18" CENTER TO CENTER, CENTERED ON SAW-CUT.
6. SANITARY SEWER MANHOLES INSTALLED BELOW THE FLOODPLAIN ELEVATION SHALL HAVE WATERTIGHT MANHOLE FRAMES AND COVERS AS PER SPECIFICATION 02090.
7. CONTRACTOR SHALL FIELD VERIFY THE LOCATION OF THE HOLES DRILLED FOR THE RISER PIPE INSTALLATION THRU THE WET VAULT TOP SLAB.
8. REMOVE THE EXISTING FORCE MAIN TO THE NEAREST PIPE JOINT AND TIE PROPOSED FORCE MAIN TO EXISTING USING RESTRAINED JOINTS.
9. THE EXISTING FORCE MAIN IS ASSUMED TO BE DUCTILE IRON BELL AND SPIGOT AND SHALL BE FIELD VERIFIED BY THE CONTRACTOR.
10. CONTRACTOR TO PROTECT EXISTING CONDUIT AND CABLE. IF CABLE OR CONDUIT IS DAMAGED DURING CONSTRUCTION, CONTRACTOR SHALL REPLACE AT NO ADDITIONAL COST TO THE CITY.
11. YARD LIGHT POLES, ELECTRICAL & COMMUNICATION POLES, AND SERVICE POLES SHALL BE ABLE TO WITHSTAND ULTIMATE DESIGN WIND SPEED OF 130 MPH, V(ULT).
12. CONTRACTOR TO SAW-CUT, REMOVE, AND REPLACE CONCRETE AS NECESSARY. NO SEPARATE PAY.
13. SAW-CUT AND REMOVE CONCRETE PAVEMENT AND INSTALL FOUNDATION AS SHOWN ON STRUCTURAL DWG. NO.'S SCT-S-07 AND SCT-S-08.

PROPOSED POINT TABLE

POINT	NORTHING	EASTING	DESCRIPTION	ELEVATION
1	13801108.29	3122166.80	PROP. TIE-IN TO EXIST. FORCE MAIN	34.50' (NFV)
2	13801109.71	3122165.22	PROP. 10" 45° BEND	34.82'
3	13801109.28	3122129.15	PROP. TIE-IN TO EXIST. FORCE MAIN	34.50' (NFV)
4	13801109.02	3122124.01	PROP. 24" 45° BEND	34.82'
5	13801111.82	3122179.59	PROP. TIE-IN TO EXIST. FORCE MAIN	31.82'
6	13801108.93	3122179.73	PROP. TIE-IN TO EXIST. FORCE MAIN	31.82'

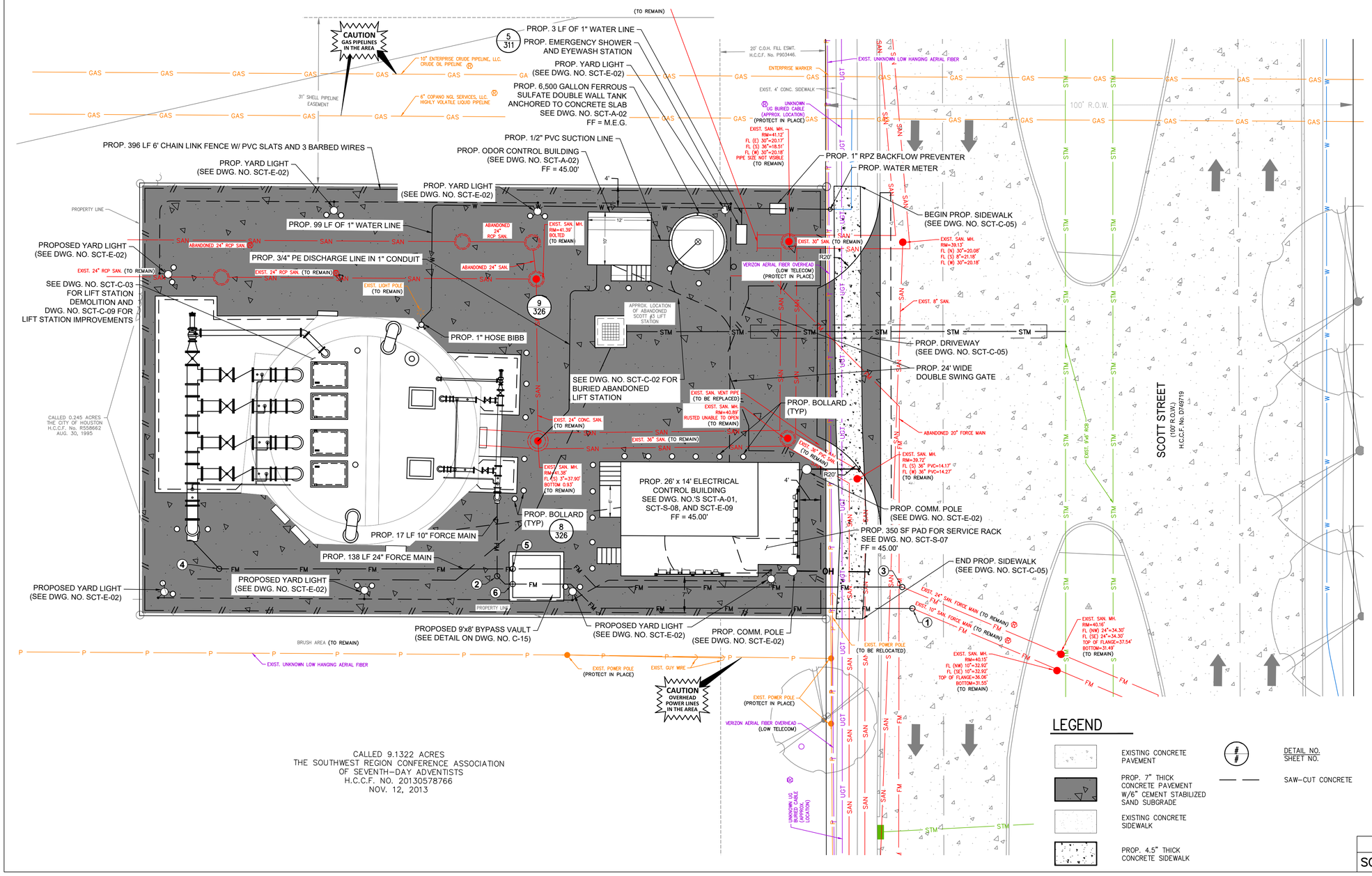

LEGEND

- EXISTING CONCRETE PAVEMENT
- PROP. 7" THICK CONCRETE PAVEMENT W/6" CEMENT STABILIZED SAND SUBGRADE
- EXISTING CONCRETE SIDEWALK
- PROP. 4.5" THICK CONCRETE SIDEWALK
- DETAIL NO. / SHEET NO.
- SAW-CUT CONCRETE

10' 0' 10'
SCALE
1"=10'

N W E S

BENCHMARK:

CITY OF HOUSTON MONUMENT 5452-7313 IS A BRASS DISC IN CONCRETE STAMPED 030070 LOCATED ON THE NORTHEAST CORNER ON AIRPORT BLVD. BRIDGE APPROXIMATELY 0.1 MILE EAST FROM THE INTERSECTION OD SCOTT STREET IN KEY MAP NO. 573G IN THE SIMS BAYOU WATERSHED.

ELEV. 43.59 FEET NAVD 1988, 2001 ADJUSTMENT (PROJECT DATUM)
ELEV. 43.70 FEET NAVD 1988, (GEOID 18')

FLOODPLAIN NOTE:

AS PER FIRM PANEL 48201C0890M DATED MAY 2, 2019. THIS TRACT LIES WITHIN THE 500-YEAR FLOODPLAIN.
100-YR FLOODPLAIN ELEV. 38.00'
500-YR FLOODPLAIN ELEV. 42.00'
FIRM PANEL: 48201C0890M

T.B.M #41:

SET 5/8" I.R. W/CAP LOCATED ON MEDIAN NOSE ON SCOTT ST. APPROX. 400 FT NORTH FROM THE INTERSECTION OF SOUTH ACRES DRIVE
ELEV.= 39.76 FT.

EXISTING UTILITY NOTE:

EXISTING UNDERGROUND UTILITY INFORMATION (TYPE, SIZE & OWNERSHIP) ARE SHOWN APPROXIMATELY BASED ON THE AVAILABLE RECORD DRAWINGS AND FIELD VERIFICATION (WHERE FEASIBLE) WITHOUT PROBING AND EXCAVATION. NO WARRANTY IS MADE AS TO THE ACCURACY OR COMPLETENESS OF UTILITY LOCATION SHOWN ON THE DRAWING. CAUTION SHOULD BE EXERCISED WHEN EXCAVATING OR BORE AND JACKING IN THE VICINITY OF UNDERGROUND UTILITIES. OWNERS OF THE UTILITIES SHOULD BE NOTIFIED PRIOR TO SUCH ACTIVITIES. CALL UTILITY COORDINATING COMMITTEE AT 713-223-4567, AT LEAST 48 HOURS PRIOR TO EXCAVATING IN THE STREET RIGHT-OF-WAY.

NO.	DATE	REVISION	APP.

NOTICE:

FOR YOUR SAFETY, YOU ARE REQUIRED BY TEXAS LAW TO CALL 811 AT LEAST 48 HOURS BEFORE YOU DIG SO THAT UNDERGROUND LINES CAN BE MARKED. THIS SIGNATURE DOES NOT FULFILL YOUR OBLIGATION TO CALL 811

VERIFICATION OF PRIVATE UTILITY LINES

Date

CenterPoint Energy natural gas utilities shown. (Gas service lines are not shown). This signature not be used for conflict verification.

Signature valid for six months.

Date

CenterPoint Energy/UNDERGROUND Electrical Facilities Verification ONLY. (This signature verifies existing underground facilities – not to be used for conflict verification)

Signature valid for six months.

Date

Approved for AT&T underground conduit facilities only.
Signature valid for one year.

IDS Engineering Group
13430 NW. Freeway, Suite 700
Houston, Tx. 77040
713.462.3178
TxEng Firm 2726 | TxSurv Firm 10110700

THIS DOCUMENT IS RELEASED FOR THE PURPOSE OF REVIEW UNDER THE AUTHORITY OF MARCEL KHOUW, P.E. 101807 ON 05/27/2026. IT IS NOT TO BE USED FOR CONSTRUCTION PURPOSES.

SURVEYED BY: KUO & ASSOCIATES, INC.
TBPE FIRM #F-4578; TBPLS FIRM #1007560

CITY OF HOUSTON
HOUSTON PUBLIC WORKS

LIFT STATION RENEWAL AND REPLACEMENT FY 2023

SCOTT NO. 3 LIFT STATION PROPOSED SITE PLAN

WBS NUMBER	FOR CITY OF HOUSTON USE ONLY
R-000267-0179-4	
DRAWING SCALE	
HORIZ: 1" = 10' VERT: N/A	
CITY OF HOUSTON PM	
NAWARAJ PANTA, P.E.	
DWG. NO. SCT-C-04	SHEET NO. 117 OF 361

FILE PATH: \\idseg.com\FS\Projects\0000\005708500 CoH Lift Stations - FY 2023\CAD\DWG\PRODUCTION\117-SCOTT No 3 PROP SITE PLAN.dwg

PLOTTED: 5/14/2026 3:34 PM

NOTES:

1. RESPONSIBILITY FOR MAINTENANCE OF THE DETENTION FACILITY WILL BE BY THE PROPERTY OWNER.
2. SUBSURFACE DRAINAGE SYSTEMS ARE REQUIRED TO BE DRAINED IN 48 HOURS.
3. OFFSITE FLOW IS UNAFFECTED BY THE PROPOSED LIFT STATION STRUCTURE AND CONCRETE PAVING. NO SEPARATE PAY.
4. CONTRACTOR TO SAW-CUT, REMOVE, AND REPLACE CONCRETE AS NECESSARY. NO SEPARATE PAY.
5. SAW-CUT AND REMOVE CONCRETE PAVEMENT AND INSTALL FOUNDATION AS SHOWN ON STRUCTURAL DWG. NO.'S SCT-C-08 AND SCT-C-09.
6. CONTRACTOR SHALL RESTORE DISTURBED AREAS TO EQUAL OR BETTER CONDITION AFTER PROPOSED STORM SEWER, AND MANHOLE HAVE BEEN INSTALLED AND TESTED PER CITY OF HOUSTON STANDARDS.
7. CONTRACTOR TO REMOVE PORTIONS OF ABANDONED 20" FORCE MAIN AS REQUIRED TO INSTALL PROPOSED STORM SEWER. NO SEPARATE PAY.
8. SIDEWALK THICKNESS SHALL BE 7" THICK WHEN LOCATED WITHIN THE DRIVEWAY. SIDEWALK LOCATED OUTSIDE OF THE DRIVEWAY SHALL BE 4.5" THICK PER DETAIL ON DWG. NO. C-07.

PROPOSED POINT TABLE

POINT	NORTHING	EASTING	DESCRIPTION	ELEVATION
1	13601122.18	3122183.07	PROP. TOP OF PAVEMENT	41.07'
2	13601134.29	3122224.99	PROP. TOP OF PAVEMENT	M.P.G.
3	13601120.31	3122225.71	PROP. TOP OF PAVEMENT	M.P.G.
4	13601119.13	3122199.74	PROP. TOP OF PAVEMENT	M.P.G.
5	13601134.65	3122232.85	PROP. TOP OF PAVEMENT	M.P.G.
6	13601115.34	3122233.84	PROP. TOP OF PAVEMENT	M.P.G.
7	13601114.99	3122225.98	PROP. TOP OF PAVEMENT	M.P.G.
8	13601112.69	3122226.10	PROP. TOP OF PAVEMENT	M.P.G.
9	13601111.51	3122200.13	PROP. TOP OF PAVEMENT	M.P.G.
10	13601113.82	3122200.00	PROP. CONCRETE STAIRS	DWG. NO C-01
11	13601113.62	3122195.51	PROP. CONCRETE STAIRS	DWG. NO C-01
12	13601116.61	3122195.37	PROP. CONCRETE STAIRS	DWG. NO C-01
13	13601116.82	3122199.86	PROP. CONCRETE STAIRS	DWG. NO C-01
14	13601122.62	3122199.56	PROP. CONCRETE STAIRS	DWG NO C-01
15	13601122.42	3122195.56	PROP. CONCRETE STAIRS	DWG. NO C-01
16	13601132.91	3122195.03	PROP. CONCRETE STAIRS	DWG NO C-01
28	13601170.09	3122190.85	PROP. ODOR CONTROL BLDG.	M.P.G.
29	13601180.08	3122190.45	PROP. ODOR CONTROL BLDG.	M.P.G.
30	13601180.56	3122202.44	PROP. ODOR CONTROL BLDG.	M.P.G.
31	13601170.57	3122202.84	PROP. CONCRETE STAIRS	DWG NO C-01

PROPOSED POINT TABLE

POINT	NORTHING	EASTING	DESCRIPTION	ELEVATION
32	13601167.57	3122202.96	PROP. CONCRETE STAIRS	DWG. NO C-01
33	13601167.27	3122195.47	PROP. CONCRETE STAIRS	DWG. NO C-01
34	13601170.27	3122195.35	PROP. CONCRETE STAIRS	DWG. NO C-01
41	13601175.50	3122211.54	PROPOSED SULFATE WALL TANK	M.P.G.
42	13601180.83	3122105.82	PROPOSED TOP OF PAVEMENT/ M.E.G.	±41.51'
43	13601160.05	3122109.32	PROPOSED TOP OF PAVEMENT	41.63'
44	13601175.50	3122111.54	PROPOSED TOP OF PAVEMENT	41.69'
45	13601122.85	3122111.17	PROPOSED TOP OF PAVEMENT	41.35'
46	13601140.96	3122179.34	PROPOSED TOP OF PAVEMENT	41.35'
47	13601132.96	3122179.49	PROPOSED TOP OF PAVEMENT	41.35'
48	13601126.14	3122179.62	PROPOSED TOP OF PAVEMENT	41.35'
50	13601133.11	3122199.02	PROP. CONCRETE STAIRS	M.E.G.
51	13601139.10	3122237.64	PROPOSED TOP OF PAVEMENT	40.25'
53	13601137.81	3122239.77	PROPOSED TOP OF PAVEMENT	40.07'
54	13601132.66	3122245.27	PROPOSED TOP OF PAVEMENT	39.90'
55	13601122.17	3122248.91	PROPOSED TOP OF PAVEMENT/M.E.G.	38.93'
57	13601168.65	3122236.12	PROPOSED TOP OF PAVEMENT	40.60'
58	13601169.76	3122237.72	PROPOSED TOP OF PAVEMENT	40.40'
59	13601174.96	3122242.45	PROPOSED TOP OF PAVEMENT	40.30'
60	13601186.51	3122245.54	PROPOSED TOP OF PAVEMENT/M.E.G.	39.12'
81	13601099.93	3122109.86	PROPOSED TOP OF PAVEMENT/ M.E.G.	±41.30'
82	13601105.85	3122239.35	PROPOSED TOP OF PAVEMENT	±41.00'
83	13601186.74	3122235.19	PROPOSED TOP OF PAVEMENT	±41.27'
84	13601106.90	3122120.03	PROPOSED TOP OF PAVEMENT	41.24'
85	13601109.13	3122168.88	PROPOSED TOP OF PAVEMENT	41.13'

PROPOSED POINT TABLE

POINT	NORTHING	EASTING	DESCRIPTION
17	13601112.66	3122194.64	PROP. BOLLARD
18	13601117.62	3122194.41	PROP. BOLLARD
19	13601122.25	3122194.20	PROP. BOLLARD
20	13601127.25	3122193.99	PROP. BOLLARD
21	13601132.24	3122193.79	PROP. BOLLARD
22	13601134.20	3122199.68	PROP. BOLLARD
23	13601134.41	3122204.17	PROP. BOLLARD
24	13601134.61	3122208.67	PROP. BOLLARD
25	13601134.82	3122213.16	PROP. BOLLARD
26	13601135.02	3122217.66	PROP. BOLLARD
27	13601135.22	3122222.15	PROP. BOLLARD
35	13601165.91	3122194.85	PROP. BOLLARD
36	13601166.08	3122198.84	PROP. BOLLARD
37	13601166.24	3122202.84	PROP. BOLLARD

PROPOSED POINT TABLE

POINT	NORTHING	EASTING	DESCRIPTION
38	13601170.14	3122206.47	PROP. BOLLARD
39	13601167.63	3122212.07	PROP. BOLLARD
40	13601171.10	3122218.54	PROP. BOLLARD
61	13601105.76	3122113.47	PROP. BOLLARD
62	13601103.84	3122115.49	PROP. BOLLARD
63	13601107.20	3122150.31	PROP. BOLLARD
64	13601107.28	3122153.09	PROP. BOLLARD
65	13601108.96	3122189.71	PROP. BOLLARD
66	13601109.03	3122192.50	PROP. BOLLARD
67	13601178.86	3122182.31	PROP. BOLLARD
68	13601178.79	3122179.53	PROP. BOLLARD
69	13601177.10	3122143.74	PROP. BOLLARD
70	13601177.02	3122140.95	PROP. BOLLARD
71	13601165.64	3122112.53	PROP. BOLLARD

PROPOSED POINT TABLE

POINT	NORTHING	EASTING	DESCRIPTION
72	13601162.85	3122112.39	PROP. BOLLARD
73	13601116.15	3122115.65	PROP. BOLLARD
74	13601116.43	3122121.49	PROP. BOLLARD
75	13601125.09	3122179.29	PROP. BOLLARD
76	13601126.73	3122180.91	PROP. BOLLARD
77	13601132.73	3122180.74	PROP. BOLLARD
78	13601140.62	3122180.57	PROP. BOLLARD
79	13601146.97	3122180.41	PROP. BOLLARD
80	13601152.82	3122180.13	PROP. BOLLARD

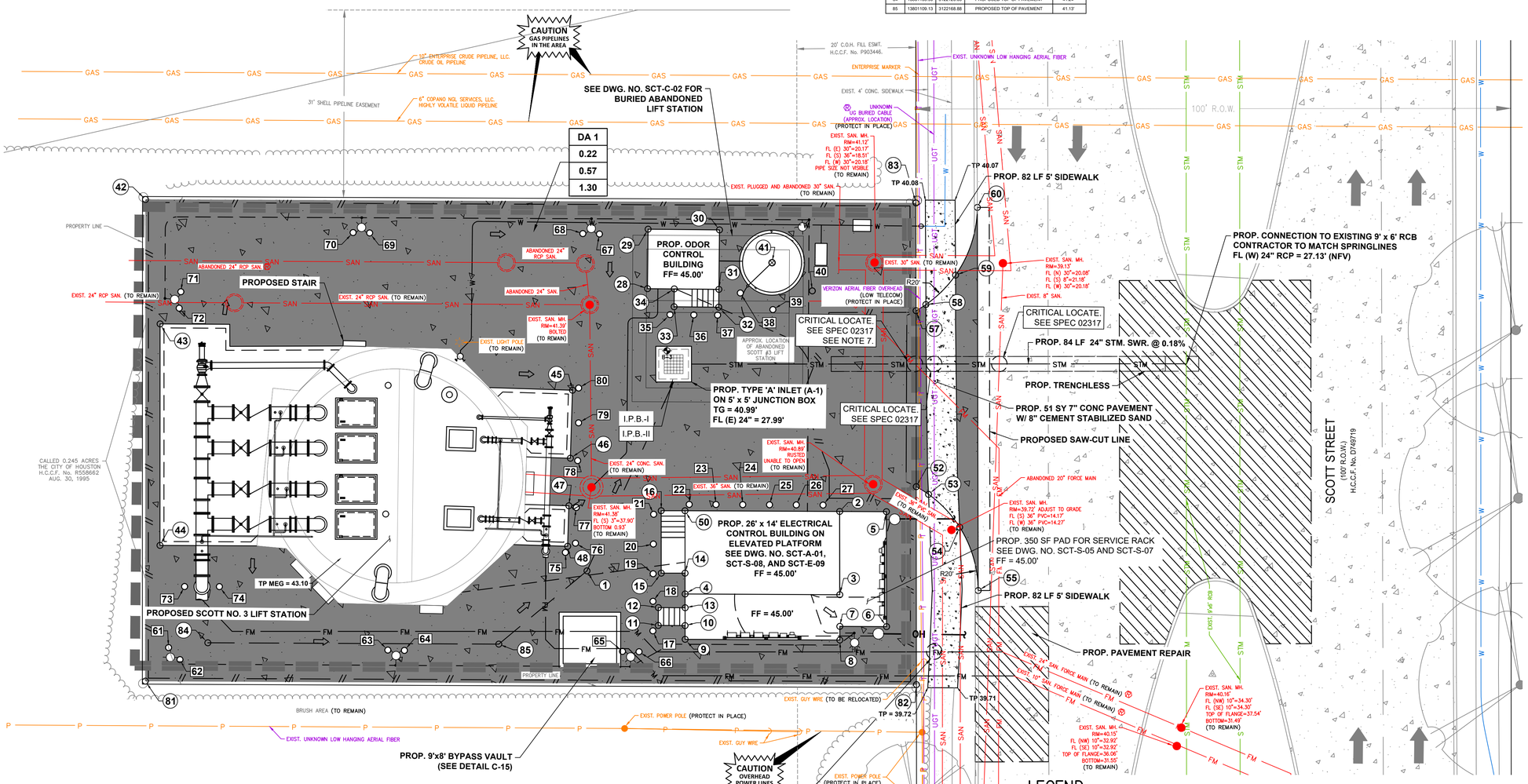

LEGEND

- EXISTING CONCRETE PAVEMENT
- PROP. 7" THICK CONCRETE PAVEMENT W/6" CEMENT STABILIZED SAND SUBGRADE
- EXISTING CONCRETE SIDEWALK
- PROP. CONCRETE SIDEWALK (SEE NOTE 8)
- FULL DEPTH CONCRETE PAVEMENT REPAIR INCLUDING SUBGRADE
- ON-SITE SHEET FLOW DIRECTION
- OFFSITE SHEET FLOW DIRECTION (SEE NOTE 3)
- I.P.B.-I INLET PROTECTION BARRIER-STAGE I
- I.P.B.-II INLET PROTECTION BARRIER-STAGE II
- DRAINAGE AREA BOUNDARY
- XX DRAINAGE AREA NO.
- X.XX ACRES
- X.XX 2-YR FLOW (CFS)
- X.XX 100-YR FLOW (CFS)
- # DETAIL NO. / DRAWING NO.
- SAW-CUT CONCRETE

N W E S

10' 0' 10'
SCALE
1"=10'

BENCHMARK:

CITY OF HOUSTON MONUMENT 5452-7313 IS A BRASS DISC IN CONCRETE STAMPED 030070 LOCATED ON THE NORTHEAST CORNER ON AIRPORT BLVD. BRIDGE APPROXIMATELY 0.1 MILE EAST FROM THE INTERSECTION OD SCOTT STREET IN KEY MAP NO. 573G IN THE SIMS BAYOU WATERSHED.

ELEV. 43.59 FEET NAVD 1988, 2001 ADJUSTMENT (PROJECT DATUM)
ELEV. 43.70 FEET NAVD 1988, (GEOID 18')

FLOODPLAIN NOTE:

AS PER FIRM PANEL 48201C0890M DATED MAY 2, 2019. THIS TRACT LIES WITHIN THE 500-YEAR FLOODPLAIN.
100-YR FLOODPLAIN ELEV. 38.00'
500-YR FLOODPLAIN ELEV. 42.00'
FIRM PANEL: 48201C0890M

T.B.M #41:

SET 5/8" I.R. W/CAP LOCATED ON MEDIAN NOSE ON SCOTT ST. APPROX. 400 FT NORTH FROM THE INTERSECTION OF SOUTH ACRES DRIVE
ELEV.= 39.76 FT.

EXISTING UTILITY NOTE:

EXISTING UNDERGROUND UTILITY INFORMATION (TYPE, SIZE & OWNERSHIP) ARE SHOWN APPROXIMATELY BASED ON THE AVAILABLE RECORD DRAWINGS AND FIELD VERIFICATION (WHERE FEASIBLE) WITHOUT PROBING AND EXCAVATION. NO WARRANTY IS MADE AS TO THE ACCURACY OR COMPLETENESS OF UTILITY LOCATION SHOWN ON THE DRAWING. CAUTION SHOULD BE EXERCISED WHEN EXCAVATING OR BORE AND JACKING IN THE VICINITY OF UNDERGROUND UTILITIES. OWNERS OF THE UTILITIES SHOULD BE NOTIFIED PRIOR TO SUCH ACTIVITIES. CALL UTILITY COORDINATING COMMITTEE AT 713-223-4567, AT LEAST 48 HOURS PRIOR TO EXCAVATING IN THE STREET RIGHT-OF-WAY.

NOTICE:
FOR YOUR SAFETY, YOU ARE REQUIRED BY TEXAS LAW TO CALL 811 AT LEAST 48 HOURS BEFORE YOU DIG SO THAT UNDERGROUND LINES CAN BE MARKED. THIS SIGNATURE DOES NOT FULFILL YOUR OBLIGATION TO CALL 811

VERIFICATION OF PRIVATE UTILITY LINES

Date

CenterPoint Energy natural gas utilities shown. (Gas service lines are not shown). This signature not be used for conflict verification.

Signature valid for six months.

Date

CenterPoint Energy/UNDERGROUND Electrical Facilities Verification ONLY. (This signature verifies existing underground facilities - not to be used for conflict verification)

Signature valid for six months.

Date

Approved for AT&T underground conduit facilities only.
Signature valid for one year.

IDS Engineering Group
13430 NW. Freeway, Suite 700
Houston, Tx. 77040
713.462.3178
TxEng Firm 2726 | TxSurv Firm 10110700

SURVEYED BY: KUO & ASSOCIATES, INC.
TBPE FIRM #F-4578; TBPLS FIRM #1007560

THIS DOCUMENT IS RELEASED FOR THE PURPOSE OF REVIEW UNDER THE AUTHORITY OF MARCEL KHOUW, P.E. 101807 ON 05/27/2026. IT IS NOT TO BE USED FOR CONSTRUCTION PURPOSES.

CITY OF HOUSTON
HOUSTON PUBLIC WORKS

LIFT STATION RENEWAL AND REPLACEMENT FY 2023

SCOTT NO. 3 LIFT STATION GRADING PLAN AND DRAINAGE PLAN

WBS NUMBER	FOR CITY OF HOUSTON USE ONLY
R-000267-0179-4	
DRAWING SCALE	
HORIZ: VALUE VERT: N/A	
CITY OF HOUSTON PM	
NAWARAJ PANTA, P.E.	
DWG. NO. SCT-C-05	SHEET NO. 118 OF 361

NO.	DATE	REVISION	APP.

FILE PATH: \\dseg.com\FS\Projects\0000\0057085OO CoH Lift Stations - FY 2023\CAD\DWG\PRODUCTION\118-SCOTT No 3 GRADING.dwg

PLOTTED: 5/14/2026 3:34 PM

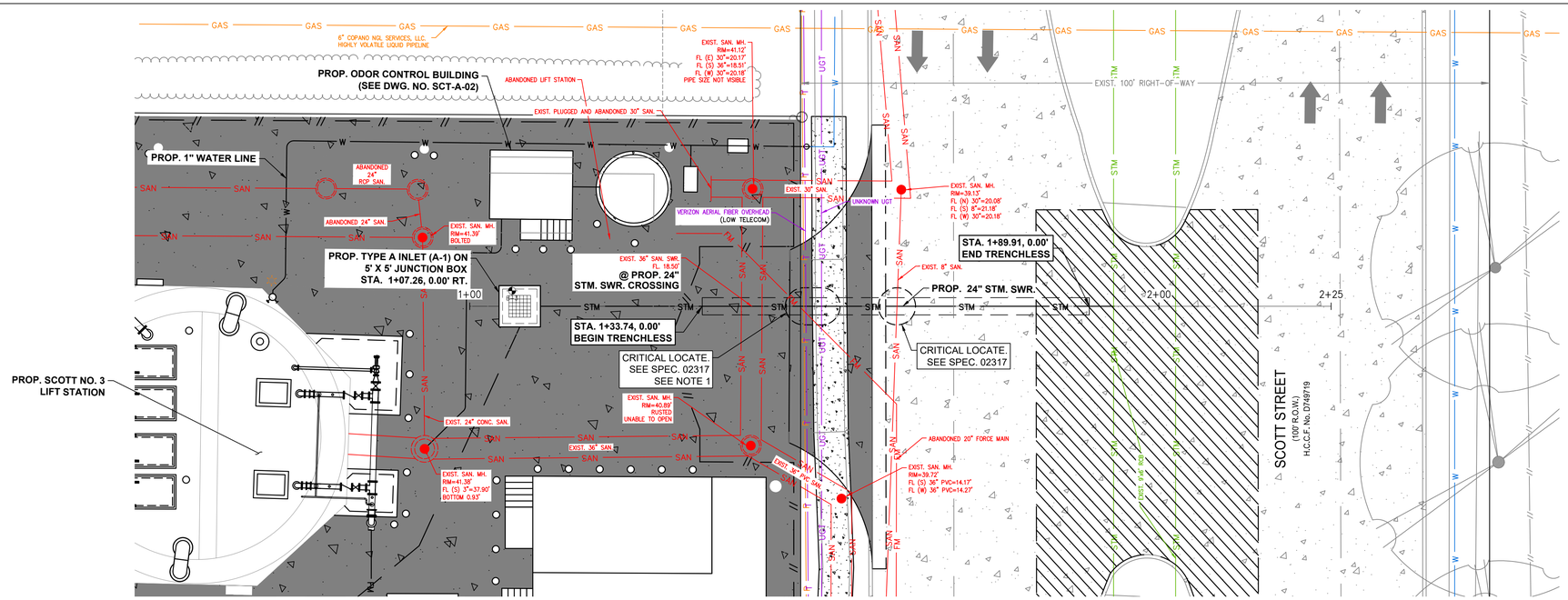

10' 0' 10'
SCALE
H: 1" = 10'
V: 1" = 2'

N
W E
S

NOTE:

1. CONTRACTOR TO REMOVE PORTIONS OF ABANDONED 20" FORCE MAIN AS REQUIRED TO INSTALL PROPOSED STORM SEWER. NO SEPARATE PAY.

LEGEND

FULL DEPTH CONCRETE PAVEMENT REPAIR INCLUDING SUBGRADE

STORM SEWER PROFILE INLET A–1 TO EXIST. RCB

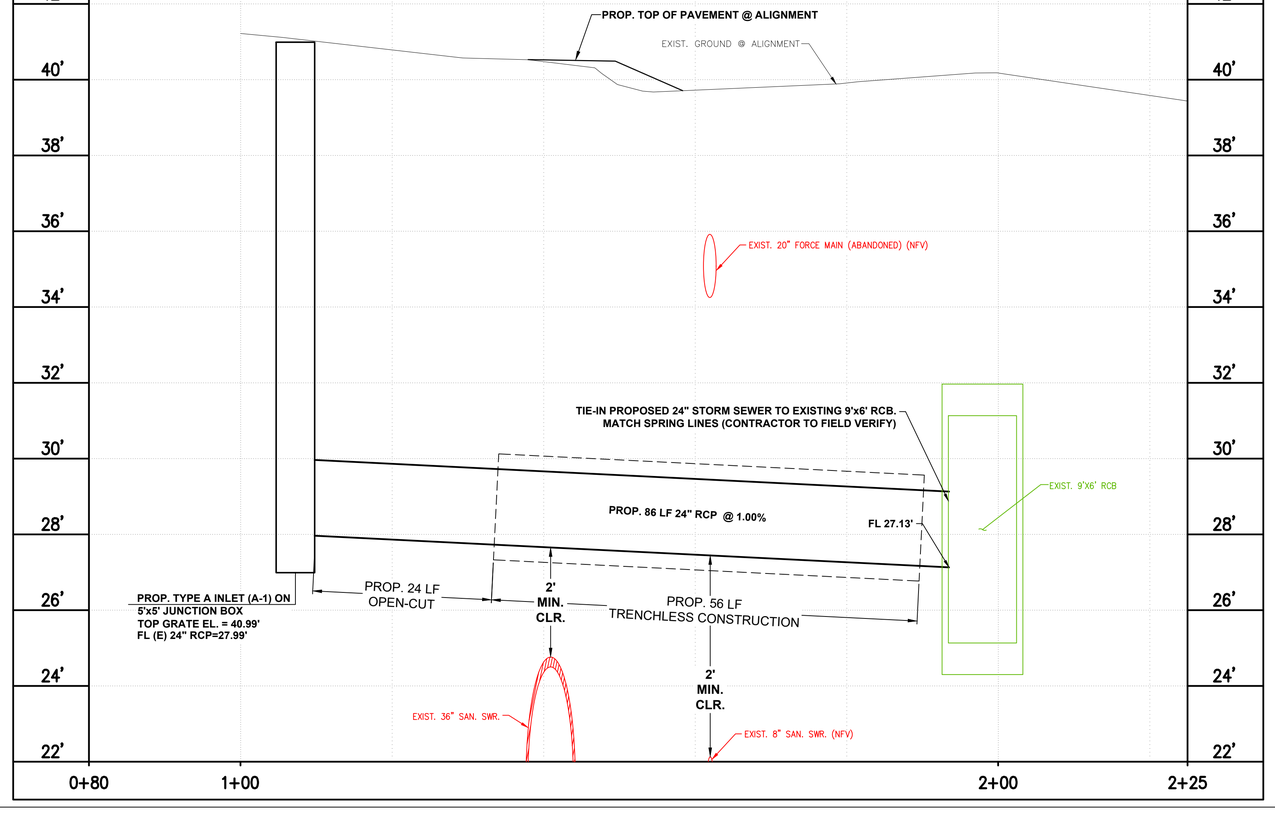

NO.	DATE	REVISION	APP.

IDS Engineering Group
13430 NW. Freeway, Suite 700
Houston, Tx. 77040
713.462.3178
TxEng Firm 2726 | TxSurv Firm 10110700

SURVEYED BY: KUO & ASSOCIATES, INC.
TBPE FIRM #F-4578; TBPLS FIRM #1007560

THIS DOCUMENT IS RELEASED FOR THE PURPOSE OF REVIEW UNDER THE AUTHORITY OF MARCEL KHOUW, P.E. 101807 ON 05/27/2026. IT IS NOT TO BE USED FOR CONSTRUCTION PURPOSES.

CITY OF HOUSTON
HOUSTON PUBLIC WORKS

LIFT STATION RENEWAL AND REPLACEMENT FY 2023

SCOTT NO. 3 LIFT STATION PLAN AND PROFILE

WBS NUMBER	FOR CITY OF HOUSTON USE ONLY
R–000267–0179–4	
DRAWING SCALE	
HORIZ: 1" = 10' VERT: 1" = 2'	
CITY OF HOUSTON PM	
NAWARAJ PANTA, P.E.	
SHEET NO. 119 OF 361	

DWG. NO.
SCT–C–06

FILE PATH: \\idseg.com\FS\Projects\0000\005708500 CoH Lift Stations – FY 2023\CAD\DWG\PRODUCTION\119–SCOTT No 3 PLAN AND PROFILE.dwg

PLOTTED: 5/13/2026 6:31 PM

NO.	DATE	REVISION	APP.

STORM SEWER CALCULATIONS

IDS ENGINEERING GROUP

CLIENT NAME: **CITY OF HOUSTON**
PROJECT NAME: **WBS NO. R-000267-0179-3 - SCOTT #3 LIFT STATION**
IDS JOB NO: **0057-085-00**
DATE PRINTED: May 12, 2026
DATE REVISED: May 12, 2026 BY: CM

SELECT STORM EVENT FREQUENCY: 2 year
SELECT APPROPRIATE LAND USE: Light Industrial
ENTER DESIGN CURB HEIGHT (inches): 0

Re-Generate Formulas

Line	Manhole or Inlet Number U / S	Manhole or Inlet Number D / S	Reach Length (feet)	Diameter or Rise (inches)	Span (inches)	No. of Barrels	Pipe Material	Pipe Grade Minimum (%)	Pipe Grade Actual (%)	Area (acres)	Sum of Area (acres)	Runoff Coeff.	Sum of C x Area (acres)	Travel Time (minutes)	Time of Concentration (minutes)	Intensity (in./hr.)	Sum of Flows (cfs)	Design Flow (cfs)	Design Velocity (fps)	Actual Velocity (fps)	Hydraulic Gradient (%)	Change in Head (feet)	Upstream Top of Grate (feet)	Hydraulic Grade Upstream (feet)	Hydraulic Grade Downstream (feet)	Manhole Drop (D/S) (feet)	Pipe Flowline Upstream (feet)	Pipe Flowline Downstream (feet)	Depth from Gutter to HGL (feet)	Depth of Cover (feet)	Upstream NG Elev. (feet)	Depth from NG to HGL (feet)
1	A-1	OUT	86.00	24		1	RCP	0.180%	1.000%	0.22	0.22	0.65	0.15	7.85	22.7	3.95	0.57	22.62	7.20	0.18	0.001%	0.00	40.99	29.13	29.13	0.00	***27.99***	27.13	11.86	11.00	41.07	11.94

NOTES:
1. This spreadsheet has been developed using the City of Houston criteria outlined in the November 2023 Infrastructure Design Manual. The Rational Method has been used to calculate flows, and Manning's Formula for pipes flowing full has been used to calculate velocities.
2. This spreadsheet calculates rainfall intensity using the b, d, and e constants for Harris County and the City of Houston, as outlined in Appendix H of the Harris County Infrastructure Regulations, and Chapter 9 of the November 2023 City of Houston Infrastructure Design Manual.
3. Minimum storm sewer grades and maximum velocities as established in the City of Houston design criteria have been used to establish the grades used in this system.
4. Land Use "SFR" represents Single-Family Residential development. Land Use "MFR" represents Multi-Family Residential development.
5. Design flow and velocity are based entirely on pipe grade and represent the condition when pipe is flowing full with the hydraulic grade line equal to the pipe grade, and are used to demonstrate that the pipe slopes used in the calculations conform to the City of Houston minimum and maximum standards.

Runoff Coefficient Table	
Land Use	C
SFR (> ½ ac. lots)	0.35
SFR (¼ - ½ ac. lots)	0.45
SFR (< ¼ ac. lots)	0.55
MFR (< 20 d.u./ac.)	0.65
MFR (>= 20 d.u./ac.)	0.80
Business Districts	0.80
Light Industrial	0.65
Heavy Industrial	0.75
Railroad Yard Areas	0.30
Parks/Open Areas	0.18
Land Use Varies	ENTER

Pipe Material	Mannings "n" Value	Pipe Description
CLAY	0.012	Extra Strength Vitrified Clay Pipe
CMP	0.024	Corrugated Metal Pipe
CMPSI	0.013	CMP w/ Smooth Interior
HDPE	0.013	High Density Polyethylene Pipe
PVC	0.013	Polyvinyl Chloride Pipe
RCA	0.013	Reinforced Concrete Arch Pipe
RCB	0.015	Reinforced Concrete Box Culvert
RCE	0.013	Reinforced Concrete Elliptical Pipe
RCP	0.013	Reinforced Concrete Pipe

Rainfall Freq. (yrs)	b	d	e
2 year	***48.35***	***9.07***	***0.7244***
5 year	52.32	7.88	0.6900
10 year	54.68	6.96	0.6623
25 year	57.79	5.89	0.6294
50 year	61.00	5.46	0.6096
100 year	60.66	4.44	0.5797
500 year	62.17	2.95	0.5196

STORM SEWER CALCULATIONS

IDS ENGINEERING GROUP

CLIENT NAME: **CITY OF HOUSTON**
PROJECT NAME: **WBS NO. R-000267-0179-3 - SCOTT #3 LIFT STATION**
IDS JOB NO: **0057-085-00**
DATE PRINTED: May 12, 2026
DATE REVISED: May 12, 2026 BY: CM

SELECT STORM EVENT FREQUENCY: 100 year
SELECT APPROPRIATE LAND USE: Light Industrial
ENTER DESIGN CURB HEIGHT (inches): 0

Re-Generate Formulas

Line	Manhole or Inlet Number U / S	Manhole or Inlet Number D / S	Reach Length (feet)	Diameter or Rise (inches)	Span (inches)	No. of Barrels	Pipe Material	Pipe Grade Minimum (%)	Pipe Grade Actual (%)	Area (acres)	Sum of Area (acres)	Runoff Coeff.	Sum of C x Area (acres)	Travel Time (minutes)	Time of Concentration (minutes)	Intensity (in./hr.)	Sum of Flows (cfs)	Design Flow (cfs)	Design Velocity (fps)	Actual Velocity (fps)	Hydraulic Gradient (%)	Change in Head (feet)	Upstream Top of Grate (feet)	Hydraulic Grade Upstream (feet)	Hydraulic Grade Downstream (feet)	Manhole Drop (D/S) (feet)	Pipe Flowline Upstream (feet)	Pipe Flowline Downstream (feet)	Depth from Gutter to HGL (feet)	Depth of Cover (feet)	Upstream NG Elev. (feet)	Depth from NG to HGL (feet)
1	A-1	OUT	86.00	24		1	RCP	0.180%	1.000%	0.22	0.22	0.65	0.15	3.46	22.7	8.95	1.30	22.62	7.20	0.41	0.003%	0.00	40.99	29.13	29.13	0.00	***27.99***	27.13	11.86	11.00	41.07	11.94

NOTES:
1. This spreadsheet has been developed using the City of Houston criteria outlined in the November 2023 Infrastructure Design Manual. The Rational Method has been used to calculate flows, and Manning's Formula for pipes flowing full has been used to calculate velocities.
2. This spreadsheet calculates rainfall intensity using the b, d, and e constants for Harris County and the City of Houston, as outlined in Appendix H of the Harris County Infrastructure Regulations, and Chapter 9 of the November 2023 City of Houston Infrastructure Design Manual.
3. Minimum storm sewer grades and maximum velocities as established in the City of Houston design criteria have been used to establish the grades used in this system.
4. Land Use "SFR" represents Single-Family Residential development. Land Use "MFR" represents Multi-Family Residential development.
5. Design flow and velocity are based entirely on pipe grade and represent the condition when pipe is flowing full with the hydraulic grade line equal to the pipe grade, and are used to demonstrate that the pipe slopes used in the calculations conform to the City of Houston minimum and maximum standards.

Runoff Coefficient Table	
Land Use	C
SFR (> ½ ac. lots)	0.35
SFR (¼ - ½ ac. lots)	0.45
SFR (< ¼ ac. lots)	0.55
MFR (< 20 d.u./ac.)	0.65
MFR (>= 20 d.u./ac.)	0.80
Business Districts	0.80
Light Industrial	0.65
Heavy Industrial	0.75
Railroad Yard Areas	0.30
Parks/Open Areas	0.18
Land Use Varies	ENTER

Pipe Material	Mannings "n" Value	Pipe Description
CLAY	0.012	Extra Strength Vitrified Clay Pipe
CMP	0.024	Corrugated Metal Pipe
CMPSI	0.013	CMP w/ Smooth Interior
HDPE	0.013	High Density Polyethylene Pipe
PVC	0.013	Polyvinyl Chloride Pipe
RCA	0.013	Reinforced Concrete Arch Pipe
RCB	0.015	Reinforced Concrete Box Culvert
RCE	0.013	Reinforced Concrete Elliptical Pipe
RCP	0.013	Reinforced Concrete Pipe

Rainfall Freq. (yrs)	b	d	e
2 year	48.35	9.07	0.7244
5 year	52.32	7.88	0.6900
10 year	54.68	6.96	0.6623
25 year	57.79	5.89	0.6294
50 year	61.00	5.46	0.6096
100 year	***60.66***	***4.44***	***0.5797***
500 year	62.17	2.95	0.5196

IDS Engineering Group
13430 NW. Freeway, Suite 700
Houston, Tx. 77040
713.462.3178
TxEng Firm 2726 | TxSurv Firm 10110700

SURVEYED BY: KUO & ASSOCIATES, INC.
TBPE FIRM #F-4578; TBPLS FIRM #1007560

THIS DOCUMENT IS RELEASED FOR THE PURPOSE OF REVIEW UNDER THE AUTHORITY OF MARCEL KHOUW, P.E. 101807 ON 05/27/2026. IT IS NOT TO BE USED FOR CONSTRUCTION PURPOSES.

CITY OF HOUSTON
HOUSTON PUBLIC WORKS

LIFT STATION RENEWAL AND REPLACEMENT FY 2023

SCOTT NO. 3 LIFT STATION DRAINAGE CALCULATIONS

WBS NUMBER	FOR CITY OF HOUSTON USE ONLY
R-000267-0179-4	
DRAWING SCALE	
HORIZ: N/A VERT: N/A	
CITY OF HOUSTON PM	
NAWARAJ PANTA, P.E.	
DWG. NO. SCT-C-07	SHEET NO. 120 OF 361

FILE PATH: \\idseg.com\FS\Projects\0000\005708500 CoH Lift Stations - FY 2023\CAD\DWG\PRODUCTION\120-SCOTT No 3 CALCULATIONS.dwg

PLOTTED: 5/13/2026 6:31 PM

FILE PATH: \\idseg.com\FS\Projects\0000\005708500 CoH Lift Stations – FY 2023\CAD\DWG\PRODUCTION\121-SCOTT No 3 PLAN AT GRADE.dwg

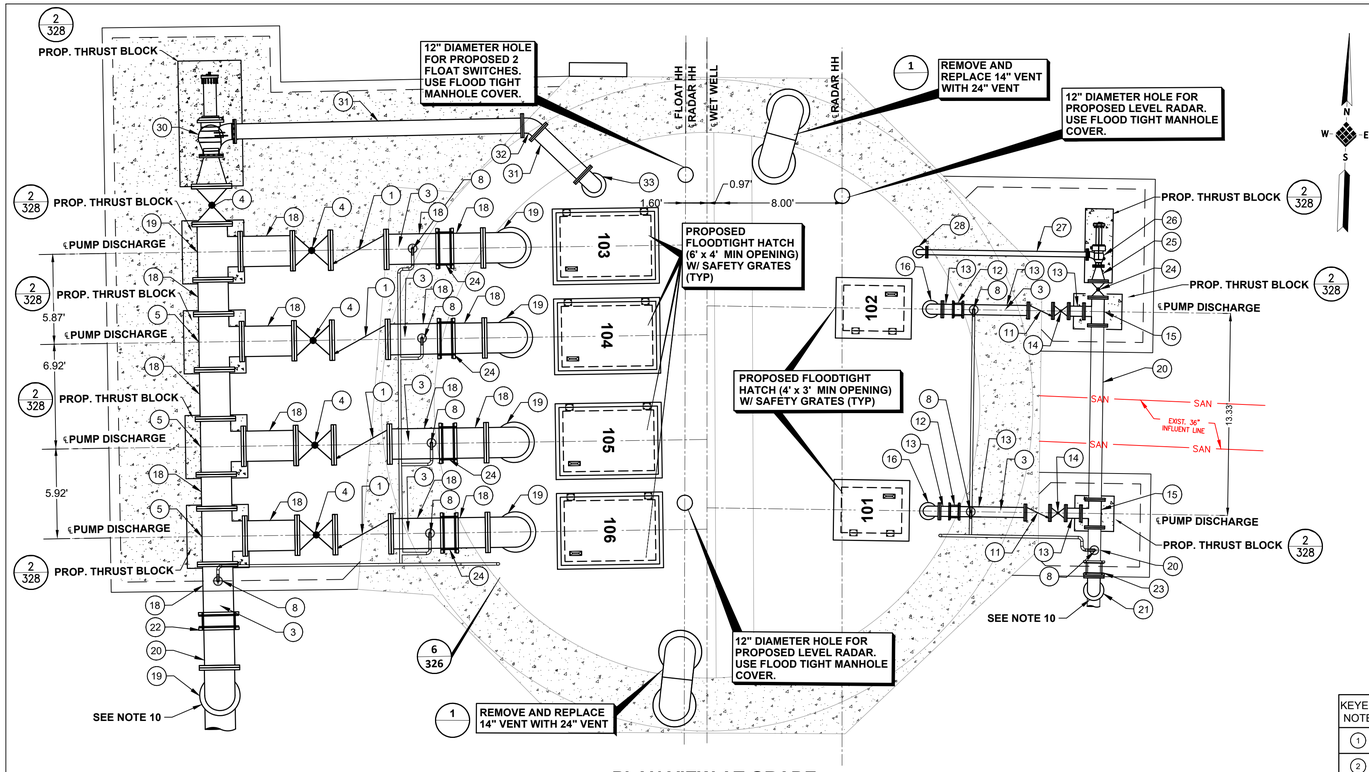

PLAN VIEW AT GRADE

SCALE: 1" = 5'

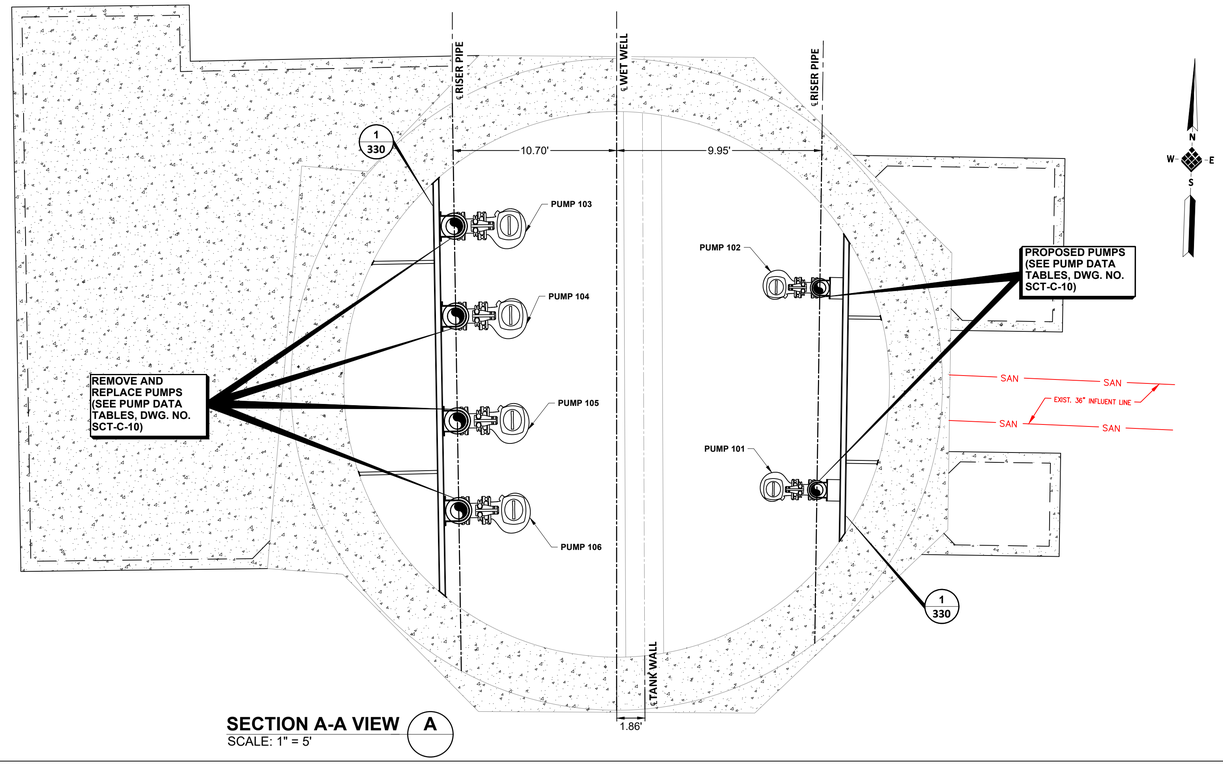

SECTION A-A VIEW

A

SCALE: 1" = 5'

NOTES:

1. ABRASIVE BLAST AND COAT ALL PIPING AND FITTINGS NOT BEING REPLACED IN WET WELL.
2. CONTRACTOR TO VERIFY DIMENSIONS REQUIRED TO INSTALL AND OPERATE VALVES.
3. EXISTING LIFT STATION WET WELL STRUCTURE TO REMAIN.
4. UV PROTECTIVE COATINGS ARE REQUIRED BY THE CITY OF HOUSTON ON ALL VENT PIPES.
5. LABEL HATCHES WITH THE CORRESPONDING PUMP NUMBER USING A 12–INCH BY 6–INCH ALUMINUM PLATE ENGRAVED WITH 1.5–INCH LETTERING WELDED TO THE HATCH.
6. CONTRACTOR TO CONFIRM SIZE AND LOCATION OF THE WET WELL HATCHES PER HATCH AND PUMP MANUFACTURER REQUIREMENTS.
7. PUMP AND ANCHOR BOLTS ARE TO BE ADHESIVE TYPE, AND EMBEDDED IN THE CONCRETE SLAB. CONTRACTOR TO SUBMIT DESIGN OF PUMPS ANCHOR BOLTS AND PATTERNS, INCLUDING CALCULATIONS, DURING SHOP DRAWINGS SUBMISSION.
8. ALL PIPING IN THE WET WELL SHALL BE FLANGED. NO FLANGED COUPLING ADAPTORS, OR VICTAULIC STYLE COUPLINGS SHALL BE PERMITTED INSIDE OF THE WET WELL.
9. ACCESS HATCHES SHALL BE ALUMINUM AND FOREST GREEN. SAFETY GRATING SHALL BE FURNISHED WITH SAFETY ORANGE POWDER COAT FINISH.
10. PIPING AFTER ITEM #19 AND #21 ARE INCIDENTAL.
11. WET WELL TO BE COATED WITH PROTECTIVE COATING PER PROJECT SPECIFICATIONS, CONSULT WITH CITY OF HOUSTON PROJECT MANAGER FOR APPROVED PRODUCTS. COATING SHALL COVER ALL CONCRETE SURFACES, AND SHALL EXTEND TO A MINIMUM OF 12" BELOW THE LOW WATER ELEVATION.

LEGEND

- # / # — DETAIL NO. / SHEET NO.
- EXISTING CONCRETE
- PROPOSED CONCRETE

KEYED NOTE	ITEM	QTY
1	CHECK VALVE (24")	4
2	ECCENTRIC REDUCER (8"x6")	2
3	PRESSURE GAUGE ASSEMBLY	6
4	PLUG VALVE (24")	5
5	TEE (24" x 24")	3
6	316 STAINLESS STEEL SUPPORT	18
7	45° BEND (24")	8
8	2" AIR RELEASE & VACUUM VALVE ASSEMBLY	8
9	ADJUSTABLE PIPE SUPPORT	12
10	ECCENTRIC REDUCER (24"x12")	4
11	CHECK VALVE (8")	2
12	FLEXIBLE COUPLING (8")	2
13	SPOOL PIECE (8")	7
14	PLUG VALVE (8")	2
15	TEE (10" x 8")	2
16	90° BEND (8")	2
17	45° BEND (8")	4
18	SPOOL PIECE (24")	33
19	90° BEND (24")	5
20	SPOOL PIECE (10")	2
21	90° BEND (10")	2
22	FLEXIBLE COUPLING (24")	5
23	FLEXIBLE COUPLING (10")	1
24	PLUG VALVE (10")	1
25	REDUCER (10" x 4")	1
26	SRA-3000A SURGE RELIVE VALVE (4") SET TO OPEN AT 55 PSI	1
27	SPOOL PIECE (4")	1
28	90° BEND (4")	1
29	REDUCER (24" x 12")	1
30	SRA-3000A SURGE RELIVE VALVE (12") SET TO OPEN AT 75 PSI	1
31	SPOOL PIECE (12")	2
32	45° BEND (12")	1
33	90° BEND (12")	1

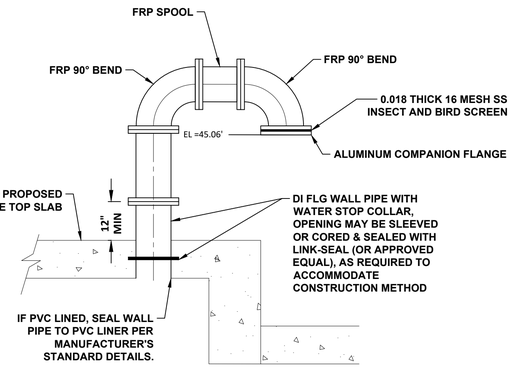

PROPOSED STRUCTURE PENETRATION

1

SCALE: N.T.S.

NO.	DATE	REVISION	APP.

IDS Engineering Group
13430 NW. Freeway, Suite 700
Houston, Tx. 77040
713.462.3178
TxEng Firm 2726 | TxSurv Firm 10110700

SURVEYED BY: KUO & ASSOCIATES, INC.
TBPE FIRM #F-4578; TBPLS FIRM #1007560

THIS DOCUMENT IS RELEASED FOR THE PURPOSE OF REVIEW UNDER THE AUTHORITY OF MARCEL KHOUW, P.E. 101807 ON 05/27/2026. IT IS NOT TO BE USED FOR CONSTRUCTION PURPOSES.

CITY OF HOUSTON
HOUSTON PUBLIC WORKS

LIFT STATION RENEWAL AND REPLACEMENT FY 2023

SCOTT NO. 3 LIFT STATION PLAN AT GRADE AND BASE

WBS NUMBER	FOR CITY OF HOUSTON USE ONLY
R–000267–0179–4	
DRAWING SCALE	
HORIZ: AS NOTED VERT: N/A	
CITY OF HOUSTON PM	
NAWARAJ PANTA, P.E.	
SHEET NO. 121 OF 361	

DWG. NO. SCT–C–08

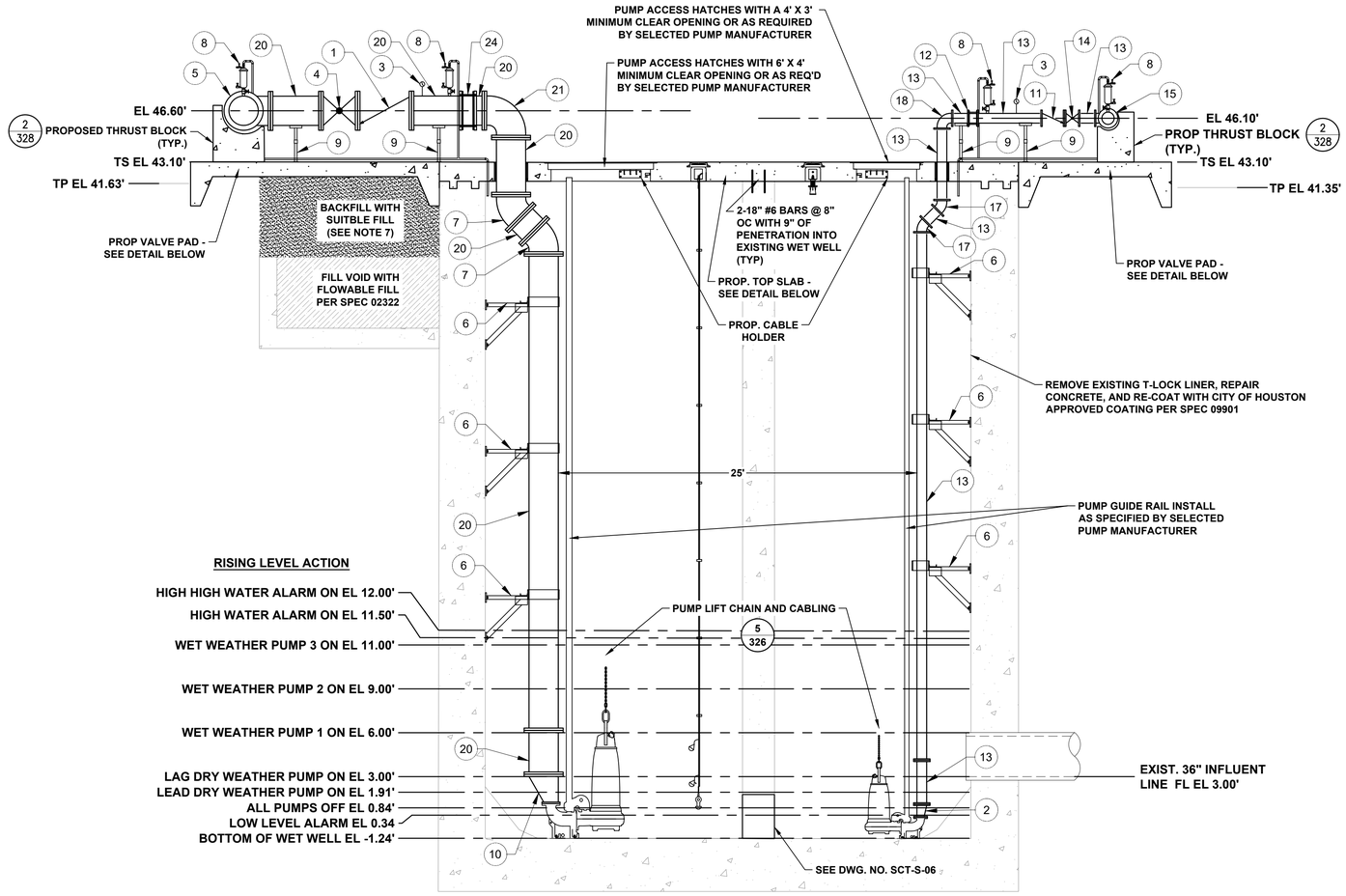

SECTIONAL ELEVATION A

SCALE: 1" = 5'

KEYED NOTE	ITEM	QTY
1	CHECK VALVE (24")	4
2	ECCENTRIC REDUCER (8"x6")	2
3	PRESSURE GAUGE ASSEMBLY	6
4	PLUG VALVE (24")	4
5	TEE (24" x 24")	3
6	316 STAINLESS STEEL SUPPORT	18
7	45° BEND (24")	8
8	2" AIR RELEASE & VACUUM VALVE ASSEMBLY	8
9	ADJUSTABLE PIPE SUPPORT	12
10	ECCENTRIC REDUCER (24"x12")	4
11	CHECK VALVE (8")	2
12	FLEXIBLE COUPLING (8")	2
13	SPOOL PIECE (8")	7
14	PLUG VALVE (8")	2
15	TEE (10" x 8")	2
16	90° ELBOW (8")	2
17	45° BEND (8")	4
18	BLIND FLANGE (10")	1
19	TEE (24" x 24") W/ BLIND FLANGE (24")	1
20	SPOOL PIECE (24")	33
21	90° ELBOW (24")	5
22	SPOOL PIECE (10")	2
23	90° ELBOW (10")	2
24	FLEXIBLE COUPLING (24")	5
25	FLEXIBLE COUPLING (10")	1

NOTES:

1. ABRASIVE BLAST AND COAT ALL PIPING AND FITTINGS NOT BEING REPLACED IN WET WELL.
2. CONTRACTOR TO VERIFY DIMENSIONS REQUIRED TO INSTALL AND OPERATE VALVES.
3. EXISTING LIFT STATION WET WELL STRUCTURE TO REMAIN.
4. UV PROTECTIVE COATINGS ARE REQUIRED BY THE CITY OF HOUSTON ON ALL VENT PIPES.
5. LABEL HATCHES WITH THE CORRESPONDING PUMP NUMBER USING A 12–INCH BY 6–INCH ALUMINUM PLATE ENGRAVED WITH 1.5–INCH LETTERING WELDED TO THE HATCH.
6. FILL VOID LEFT BY REMOVAL OF EXISTING VALVE VAULT WITH FLOWABLE FILL.
7. SEE ELECTRICAL PLANS FOR ADDITIONAL IMPROVEMENTS.
8. ABRASIVE BLAST AND COAT TO BE IN ACCORDANCE WITH SYSTEM 108 PER SPEC SECTION 09901 PART 2.03J.
9. CONTRACTOR TO CONFIRM SIZE AND LOCATION OF THE WET WELL HATCHES PER HATCH AND PUMP MANUFACTURER REQUIREMENTS.
10. PUMP AND ANCHOR BOLTS ARE TO BE ADHESIVE TYPE, AND EMBEDDED IN THE CONCRETE SLAB. CONTRACTOR TO SUBMIT DESIGN OF PUMP ANCHOR BOLTS AND PATTEN, INCLUDING CALCULATIONS, DURING SHOP DRAWING SUBMISSION.
11. ALL PIPING IN THE WET WELL SHALL BE FLANGED. NO FLANGED COUPLING ADAPTORS, OR VICTAULIC STYLE COUPLINGS SHALL BE PERMITTED INSIDE OF THE WET WELL.
12. ACCESS HATCHES SHALL BE FOREST GREEN. SAFETY GRATING SHALL BE FURNISHED WITH SAFETY ORANGE POWDER COAT FINISH.
13. INSTALL PLUG VALVES TO OPEN UPWARD AND TO CLOSE TO A SEATING POSITION.
14. INSTALL CHECK VALVES SO THAT WEIGHT LEVER POSITION IS APPROXIMATELY 45 DEGREES BELOW THE VALVE HORIZONTAL CENTER LINE IN THE CLOSE POSITION AND APPROXIMATELY 45 DEGREE ABOVE THE HORIZONTAL CENTER LINE IN THE FULL OPEN POSITION.
15. PROPOSED FLOAT SWITCH AND LEVEL RADARS SHOWN FOR REFERENCE. REFER TO DWG. NO. SCT–C–08 AND SCT–E–12 FOR LOCATION AND SIZE.
16. CONTRACTOR TO SUBMIT A WET WELL TOP SLAB STRUCTURAL PLAN SIGN AND SEALED BY A REGISTERED ENGINEER IN THE STATE OF TEXAS.
17. WET WELL TO BE COATED WITH PROTECTIVE COATING PER PROJECT SPECIFICATIONS, CONSULT WITH CITY OF HOUSTON PROJECT MANAGER FOR APPROVED PRODUCTS. COATING SHALL COVER ALL CONCRETE SURFACES, AND SHALL EXTEND TO A MINIMUM OF 12" BELOW THE LOW WATER ELEVATION.

LEGEND

- DETAIL NO. / SHEET NO.
- EXISTING CONCRETE
- PROPOSED CONCRETE
- REMOVE AND REPLACE CONCRETE AS PER DETAIL 11, SHEET XX.
- PROP. SUITABLE FILL
- PROP. FLOWABLE FILL

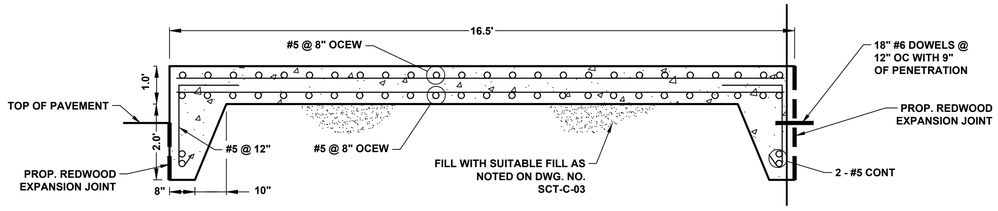

WET WEATHER DISCHARGE PIPING CONCRETE SLAB DETAIL

SCALE: 1" = 2'

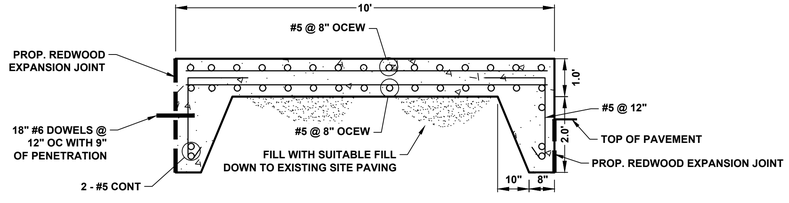

DRY WEATHER DISCHARGE PIPING CONCRETE SLAB DETAIL

SCALE: 1" = 2'

NO.	DATE	REVISION	APP.

IDS Engineering Group
13430 NW. Freeway, Suite 700
Houston, Tx. 77040
713.462.3178
TxEng Firm 2726 | TxSurv Firm 10110700

SURVEYED BY: KUO & ASSOCIATES, INC.
TBPE FIRM #F-4578; TBPLS FIRM #1007560

THIS DOCUMENT IS RELEASED FOR THE PURPOSE OF REVIEW UNDER THE AUTHORITY OF MARCEL KHOUW, P.E. 101807 ON 05/27/2026. IT IS NOT TO BE USED FOR CONSTRUCTION PURPOSES.

CITY OF HOUSTON
HOUSTON PUBLIC WORKS

LIFT STATION RENEWAL AND REPLACEMENT FY 2023

SCOTT NO. 3 LIFT STATION ELEVATION SECTION

WBS NUMBER	FOR CITY OF HOUSTON USE ONLY
R–000267–0179–4	
DRAWING SCALE	
HORIZ: AS NOTED VERT: N/A	
CITY OF HOUSTON PM	
NAWARAJ PANTA, P.E.	
DWG. NO. SCT–C–09	SHEET NO. 122 OF 361

PLOTTED: 5/13/2026 6:31 PM
FILE PATH: \\idseg.com\FS\Projects\0000\005708500 CoH Lift Stations – FY 2023\CAD\DWG\PRODUCTION\122–SCOTT No. 3 ELEV SECTION.dwg

PLOTTED: 5/13/2026 6:31 PM

DESIGN POINT
1,700 GPM @ 78.46

SCOTT #3 LIFT STATION
DRY WEATHER CONVERSION - KSB KRTK 151-403/306XFG-K

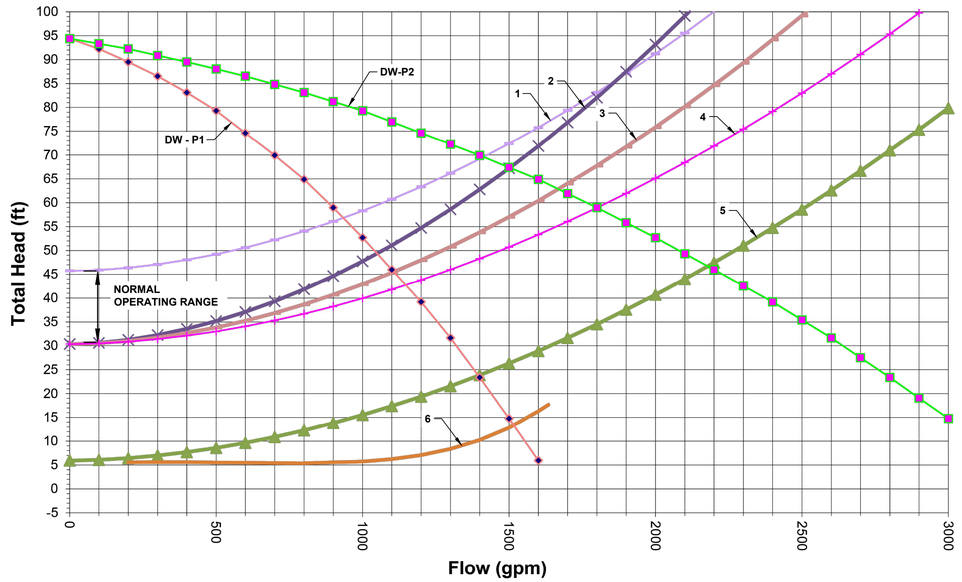

MEET 16,111 GPM @ FLOODED OPERATING LEVEL

DESIGN POINT
12,000 GPM @ 90.09'

SCOTT #3 LIFT STATION
WET WEATHER CONVERSION - KSB KRT K 300-505/1206XNG-K

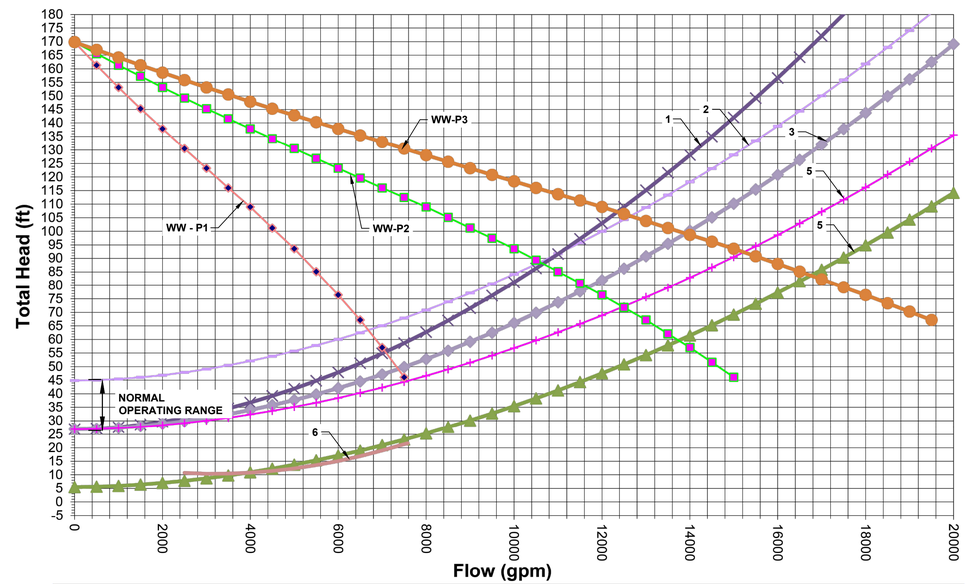

NO.	DATE	REVISION	APP.

STATION OPERATING TABLES

PROPOSED CONDITION - 23.2 MGD @ FLOODED WET WELL CONDITION

RISING WATER LEVEL

WATER LEVEL ELEVATION	ACTION	PUMP(S) IN OPERATION
0.84	PUMPS OFF LEVEL - NO ACTION	ALL PUMPS ARE OFF
1.91	LEAD DRY WEATHER PUMP TURNS ON	LEAD DW PUMP ON
3.00	LAG DRY WEATHER PUMP TURNS ON	LEAD & LAG DW PUMPS ON
6.00	WET WEATHER PUMP 1 TURNS ON	LEAD AND LAG DW & WW PUMP 1 ON
9.00	WET WEATHER PUMP 2 TURNS ON	ALL DW PUMPS & WW PUMP 1 & 2 ON
11.00	WET WEATHER PUMP 3 TURNS ON	ALL DW PUMPS & WW PUMP 1, 2, & 3 ON
11.50	HIGH WATER ALARM ON	HIGH WATER ALARM SOUND
12.00	HIGH HIGH WATER ALARM ON (FLOAT ON LEVEL)	FIRM PUMPS ON (FLOATS)

FALLING WATER LEVEL

WATER LEVEL ELEVATION	ACTION	PUMP(S) IN OPERATION
12.00	FLOAT OFF LEVEL	FIRM PUMPS OFF (FLOATS)
11.50	HIGH WATER LEVEL ALARM OFF	ALL PUMPS ON
9.00	WET WEATHER PUMP 1 TURNS OFF	ALL DW PUMPS & WW PUMP 2 & 3 ON
6.00	WET WEATHER PUMP 2 TURNS OFF	ALL DW PUMPS & WW PUMP 3 ON
3.00	WET WEATHER PUMP 3 TURNS OFF	LAG DRY WEATHER & WW 3 PUMP ON
1.91	LEAD DRY WEATHER PUMP TURNS OFF	LAG DW PUMP ON
0.84	LAG DRY WEATHER PUMP TURNS OFF	ALL PUMPS STOPPED - SEE NOTE 1
0.34	LOW LEVEL ALARM	-

NOTES:

1. PUMP ROTATION SHALL BE AS FOLLOWS: WW4(STANDBY)->WW1, DW2->DW1, WW1->WW2, WW2->WW3, WW3->WW4(STANDBY).

DRY WEATHER PUMP DATA TABLE*

PUMP CHARACTERISTICS	PUMP NO. 1	PUMP NO. 2
MOTOR DATA		
NOMIMAL SIZE (HP)	30	30
MAX SPEED (RPM)	1200	1200
SOLIDS PASSAGE		
MINIMUM SPHERE (IN)	3	3
CAPACITY (GPM)		
DESIGN	850	850
RUNOUT	1630	1630
DISCHARGE HEAD (FT)		
DESIGN	70.00	70.00
RUNOUT	6.0	6.0
SHUT OFF	94.4	94.4
EFFICIENCY (%)		
DESIGN	69.4	69.4
NPSHR (FT)		
DESIGN	5.3	5.3
RUNOUT	12.7	12.7
PUMP CYCLE TIME (MIN)	6	6
CUMULATIVE CAPACITY (GPM)	1,067	1,600

*KSB KRTK 151-403306XFG-K USED FOR ALL CALCULATIONS

WET WEATHER PUMP DATA TABLE*

PUMP CHARACTERISTICS	PUMP NO. 1	PUMP NO. 2	PUMP NO. 3	PUMP NO. 4
MOTOR DATA				
NOMIMAL SIZE (HP)	161	161	161	161
MAX SPEED (RPM)	1184	1184	1184	1184
SOLIDS PASSAGE				
MINIMUM SPHERE (IN)	3	3	3	3
CAPACITY (GPM)				
DESIGN	4070	4070	4070	4070
RUNOUT	7534	7534	7534	7534
DISCHARGE HEAD (FT)				
DESIGN	110.00	110.00	110.00	110.00
RUNOUT	52	52	52	52
SHUT OFF	129.0	129.0	129.0	129.0
EFFICIENCY (%)				
DESIGN	84.0	84.0	84.0	84.0
NPSHR (FT)				
DESIGN	10.8	10.8	10.8	10.8
RUNOUT	21.6	21.6	21.6	21.6
PUMP CYCLE TIME (MIN)	15.0	15.0	15.0	15.0
CUMULATIVE CAPACITY	6,400	10,500	12,500	-

*KSB KRT K 300-505/1206XNG-K used for all pump calculations.

IDS Engineering Group
13430 NW. Freeway, Suite 700
Houston, Tx. 77040
713.462.3178
TxEng Firm 2726 | TxSurv Firm 10110700

THIS DOCUMENT IS RELEASED FOR THE PURPOSE OF REVIEW UNDER THE AUTHORITY OF MARCEL KHOUW, P.E. 101807 ON 05/27/2026. IT IS NOT TO BE USED FOR CONSTRUCTION PURPOSES.

SURVEYED BY: KUO & ASSOCIATES, INC.
TBPE FIRM #F-4578; TBPLS FIRM #1007560

CITY OF HOUSTON
HOUSTON PUBLIC WORKS

LIFT STATION RENEWAL AND REPLACEMENT FY 2023

MECHANICAL LS PUMP CURVE DATA TABLES (SCOTT #3)

WBS NUMBER	FOR CITY OF HOUSTON USE ONLY
R-000267-0179-4	
DRAWING SCALE	
HORIZ: VALUE VERT: VALUE	
CITY OF HOUSTON PM	
NAWARAJ PANTA, P.E.	
DWG. NO. SCT-C-10	SHEET NO. 123 OF 361

FILE PATH: \\idseg.com\FS\Projects\0000\005708500 CoH Lift Stations - FY 2023\CAD\DWG\PRODUCTION\123-SCOTT No 3 CURVE DATA.dwg

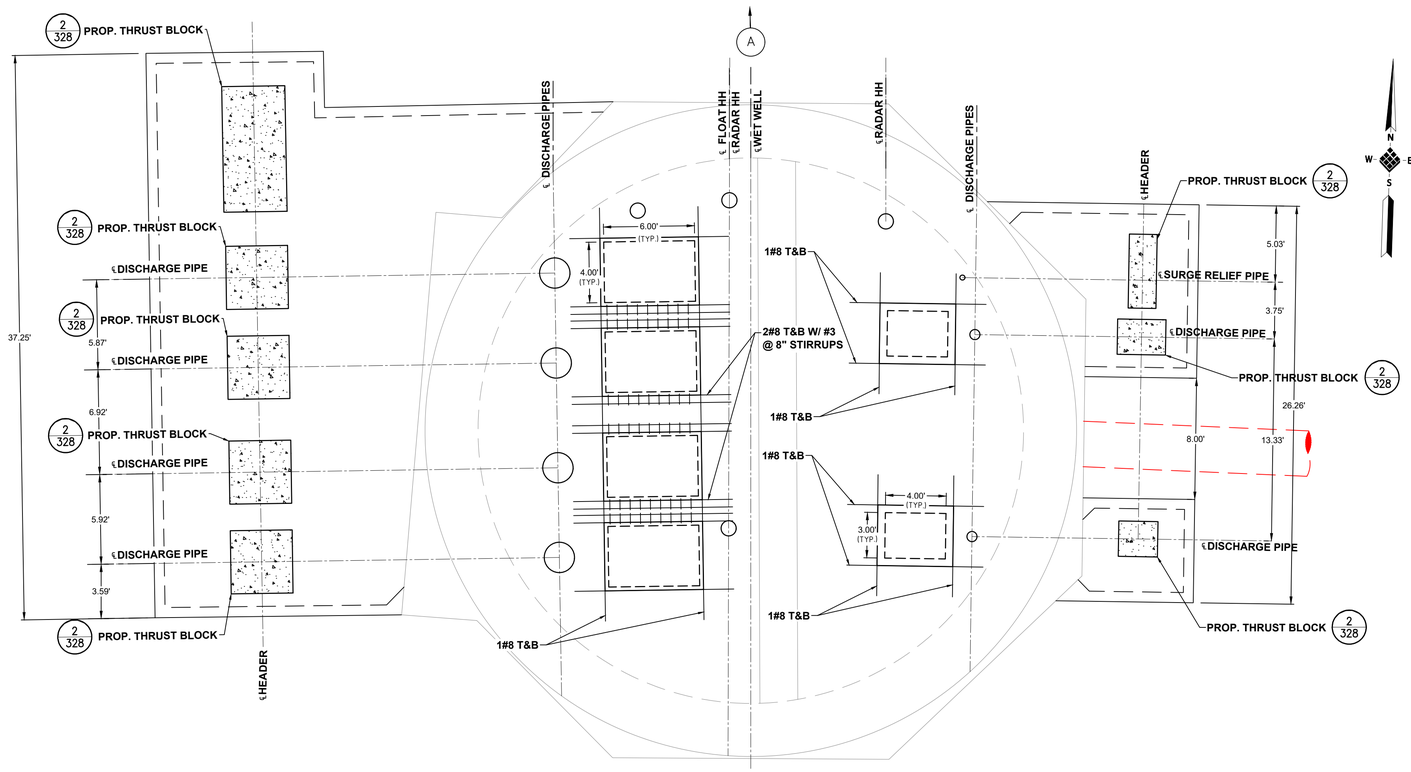

TOP SLAB DETAIL

SCALE: 1" = 5'

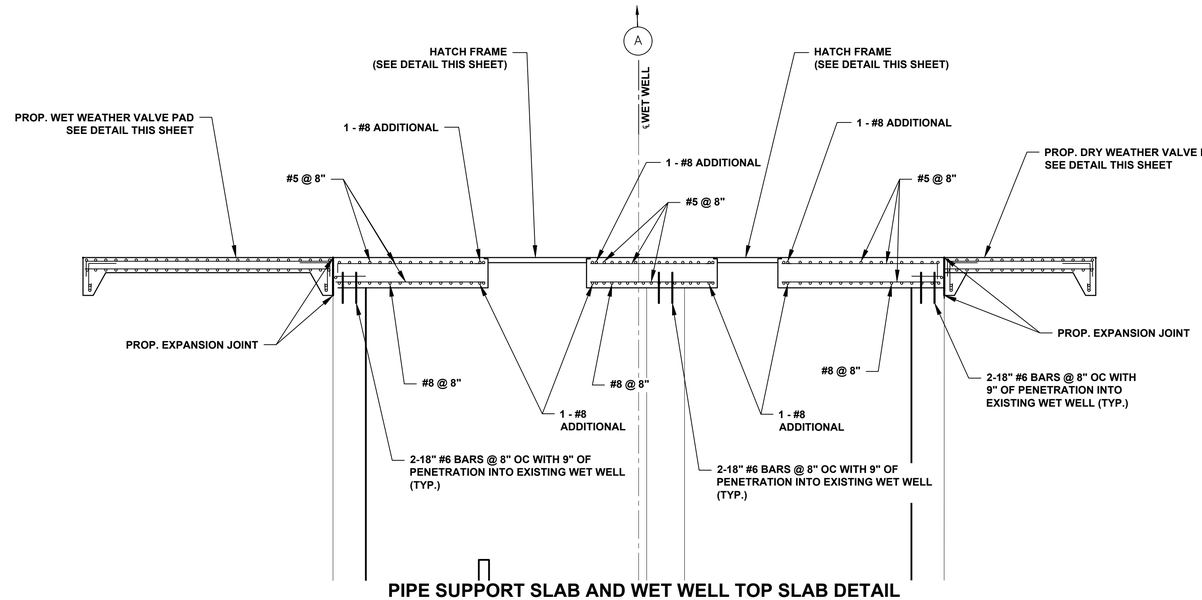

PIPE SUPPORT SLAB AND WET WELL TOP SLAB DETAIL

SCALE: 1" = 5' (SEE NOTE 2)

SCALE
5' 0' 5'
1" = 5'

LEGEND

- DETAIL NO. / SHEET NO.
- EXISTING CONCRETE
- PROPOSED CONCRETE

NOTES:

1. CONTRACTOR TO CONFIRM SIZE AND LOCATION OF THE WET WELL HATCHES PER HATCH AND PUMP MANUFACTURER REQUIREMENTS
2. CONTRACTOR TO SUBMIT A WET WELL TOP SLAB STRUCTURAL PLAN SIGNED AND SEALED BY A REGISTERED ENGINEER IN THE STATE OF TEXAS.

NO.	DATE	REVISION	APP.

IDS Engineering Group
13430 NW. Freeway, Suite 700
Houston, Tx. 77040
713.462.3178
TxEng Firm 2726 | TxSurv Firm 10110700

SURVEYED BY: KUO & ASSOCIATES, INC.
TBPE FIRM #F-4578; TBPLS FIRM #1007560

THIS DOCUMENT IS RELEASED FOR THE PURPOSE OF REVIEW UNDER THE AUTHORITY OF MARCEL KHOUW, P.E. 101807 ON 05/27/2026. IT IS NOT TO BE USED FOR CONSTRUCTION PURPOSES.

CITY OF HOUSTON
HOUSTON PUBLIC WORKS

LIFT STATION RENEWAL AND REPLACEMENT FY 2023

SCOTT NO. 3 LIFT STATION TOP SLAB DETAIL

WBS NUMBER	FOR CITY OF HOUSTON USE ONLY
R-000267-0179-4	
DRAWING SCALE	
HORIZ: 1" = 5' VERT: N/A	
CITY OF HOUSTON PM	
NAWARAJ PANTA, P.E.	
SHEET NO. 124 OF 361	

DWG. NO. SCT-C-11

PLOTTED: 5/14/2026 3:34 PM
FILE PATH: \\idseg.com\FS\Projects\0000\005708500 CoH Lift Stations - FY 2023\CAD\DWG\PRODUCTION\124-SCOTT No 3 TOP SLAB DETAIL.dwg

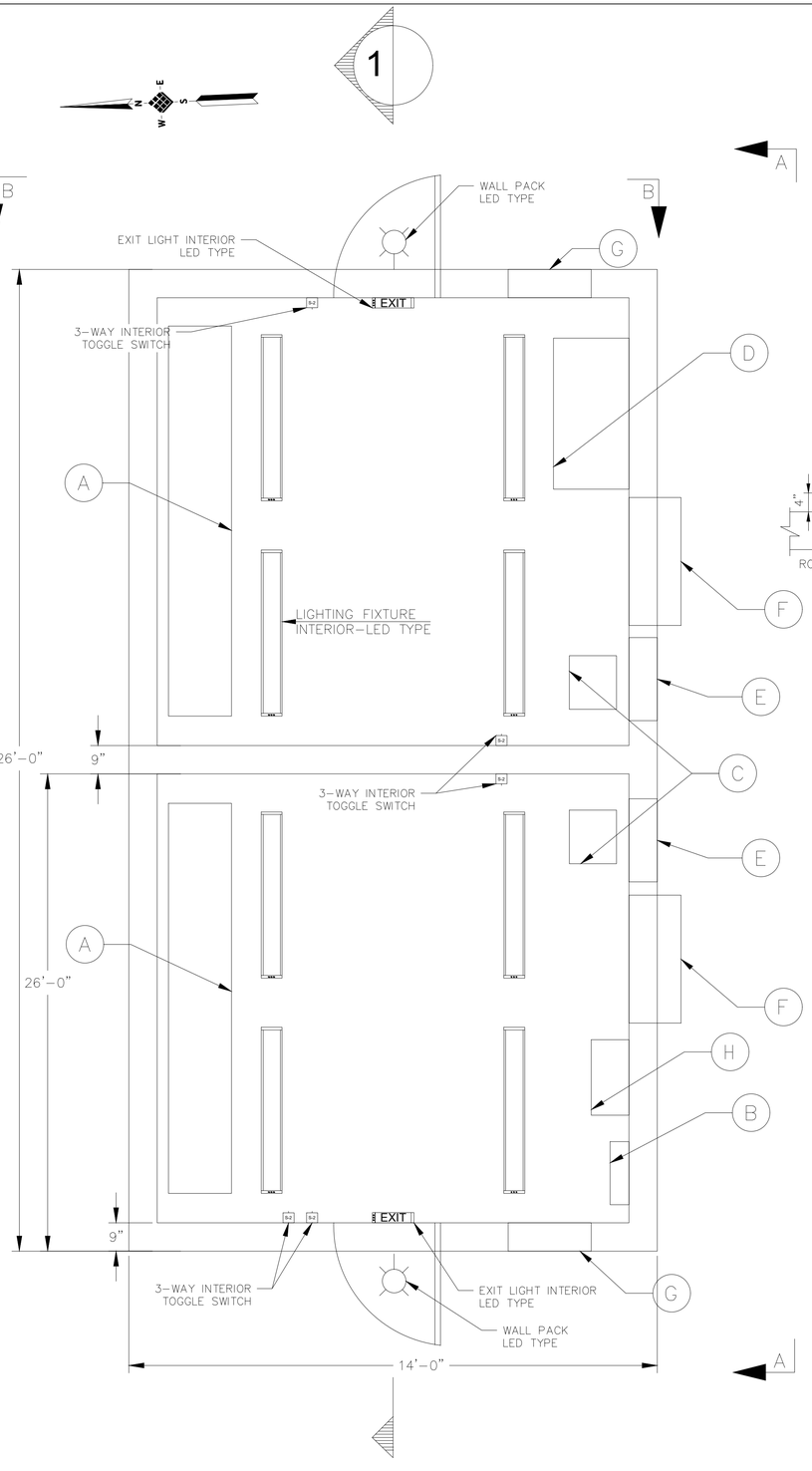

FLOOR PLAN

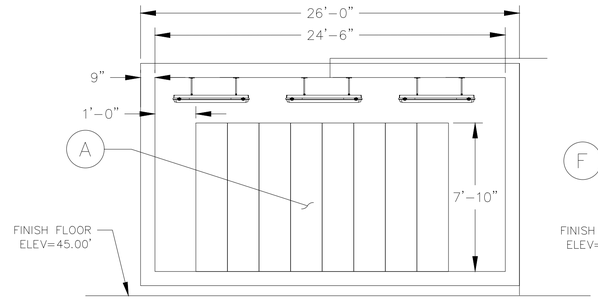

TYPICAL SECTION-1
SCALE: N.T.S.

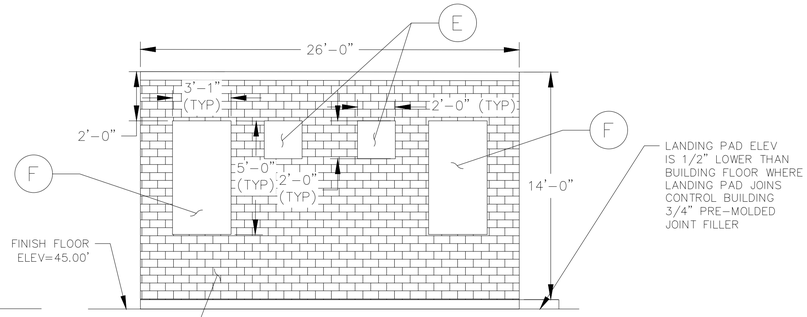

SIDE ELEVATION A
SCALE: N.T.S.

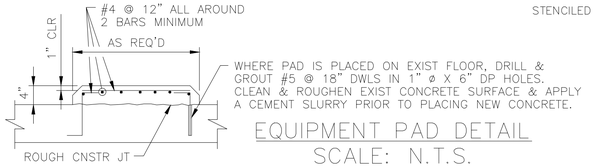

EQUIPMENT PAD DETAIL
SCALE: N.T.S.

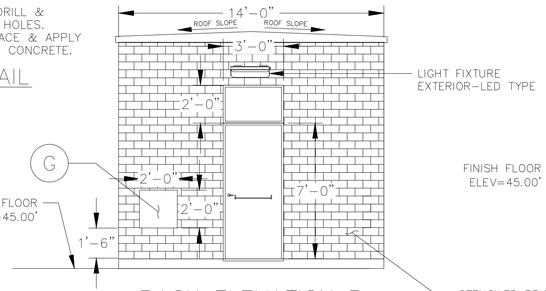

BACK ELEVATION B
SCALE: N.T.S.

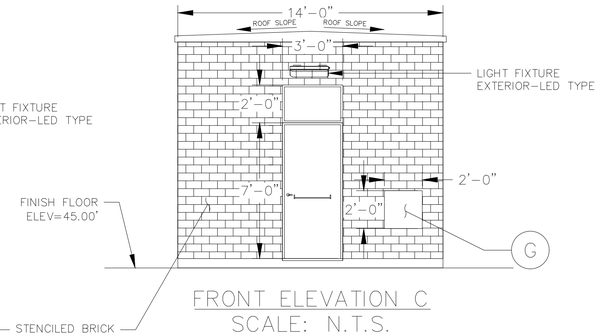

FRONT ELEVATION C
SCALE: N.T.S.

EQUIPMENT IDENTIFICATION LIST		
ITEM	TAG NO.	DESCRIPTION
A		480V MCC
B		480 V - 240 / 120 V SINGLE PHASE POWER PANEL BOARD
C		480 V - 240 / 120 V SINGLE PHASE LIGHTING TRANSFORMER
D		CONTROL PANEL
E		EXHAUST FAN
F		WALL MOUNTED HVAC UNIT/ W SS BURGLAR BARS (NOTE J)
G		LOUVER
H		ATS

NOTES:

1. PROVIDE DEFERRED SUBMITTAL TO THE CITY OF HOUSTON CODE ENFORCEMENT FOR STRUCTURAL DESIGN OF PRECAST CONCRETE BUILDING.
2. THE CONTRACTOR SHALL SUBMIT FABRICATED DRAWINGS OF PRE-FABRICATED CONCRETE BUILDINGS AND CONCRETE FOUNDATIONS SIGNED AND SEALED BY A PROFESSIONAL ENGINEER IN THE STATE OF TEXAS AS SHOWN ON DRAWINGS FOR APPROVAL BY ENGINEER. PLATFORM MUST BE MANUFACTURED BY A CITY OF HOUSTON APPROVED FABRICATOR. A LIST OF APPROVED FABRICATORS CAN BE FOUND AT THE FOLLOWING LINK: https://www.houstonpermittingcenter.org/resources?keys=approved+fabricators
3. THE BUILDING IS GENERAL PURPOSE, NON-CLASSIFIED, NON-BLAST RATED.
4. ELECTRICAL CONDUITS INTO CONTROL BUILDING SHALL BE LOCATED AND POSITIONED PRIOR TO POURING BUILDING FOUNDATION OR IF PRECAST.
5. THE HVAC UNITS SHALL BE SIZED BASED ON HEAT LOSS CALCULATIONS. COORDINATE AC/HEAT PUMP OPENING SIZE WITH SELECTED MANUFACTURE'S RECOMMENDATIONS.
6. BUILDING DOOR SHALL BE OF 316 STAINLESS STEEL TYPE.
7. THE SINGLE ENTRANCE DOORS SHALL BE 36" (WIDE) X 84" (HEIGHT).
8. OPENINGS FOR BELTLESS FAN (24"X24") ON TOP OF WALL ELEVATION WITH 24"X24" LOUVER ON THE BOTTOM. BOTH UNITS SHALL BE PROVIDED WITH REMOVABLE COVERS FOR STANDBY USE.
9. FOR LIGHTING PLAN SEE DRAWING LCK-E-07.
10. WALL UNITS SHALL BE HEAVY-DUTY EXTERIOR WALL MOUNTED HEAT PUMP TYPE UNIT. WINDOW AC UNITS NOT ALLOWED.
11. CONTRACTOR SHALL VERIFY EQUIPMENT OPENING WITH THE SELECTED MANUFACTURER'S RECOMMENDATION.

NO.	DATE	REVISION	APP.

IDS Engineering Group
13430 NW. Freeway, Suite 700
Houston, Tx. 77040
713.462.3178
TxEng Firm 2726 | TxSurv Firm 10110700

SURVEYED BY: KUO & ASSOCIATES, INC.
TBPE FIRM #F-4578; TBPLS FIRM #1007560

THIS DOCUMENT IS RELEASED FOR THE PURPOSE OF REVIEW UNDER THE AUTHORITY OF MARCEL KHOUW, P.E. 101807 ON 05/27/2026. IT IS NOT TO BE USED FOR CONSTRUCTION PURPOSES.

CITY OF HOUSTON
HOUSTON PUBLIC WORKS

LIFT STATION RENEWAL AND REPLACEMENT FY 2023

ARCHITECTURAL PRECAST CONCRETE CONTROL BUILDING 4

WBS NUMBER	FOR CITY OF HOUSTON USE ONLY
R-000267-0179-4	
DRAWING SCALE	
HORIZ: N.T.S. VERT: N/A	
CITY OF HOUSTON PM	
NAWARAJ PANTA, P.E.	
SHEET NO. 125 OF 361	

DWG. NO. SCT-A-01

PLOTTED: 5/13/2026 6:32 PM
FILE PATH: \\idseg.com\FS\Projects\0000\005708500 CoH Lift Stations - FY 2023\CAD\DWG\PRODUCTION\125-SCOTT No 3 PROP BLDG.dwg

PLOTTED: 5/13/2026 6:32 PM
FILE PATH: \\vdseg.com\FS\Projects\0000\005708500 CoH Lift Stations - FY 2023\CAD\DWG\PRODUCTION\126-SCOTT No 3 FRP BLDG.dwg

FERROUS SULFATE PROCESS FLOW SCHEMATIC

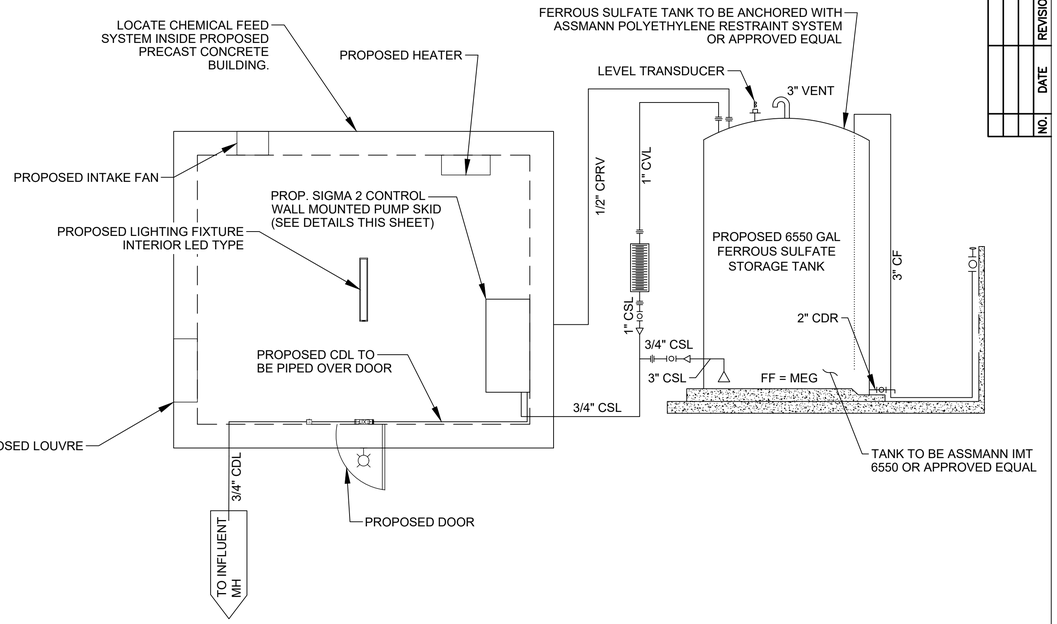

ASSMANN TANK DIMENSIONS		
CAPACITY	DIAMETER	HEIGHT
6550	119"	187"

NO.	DATE	REVISION	APP.

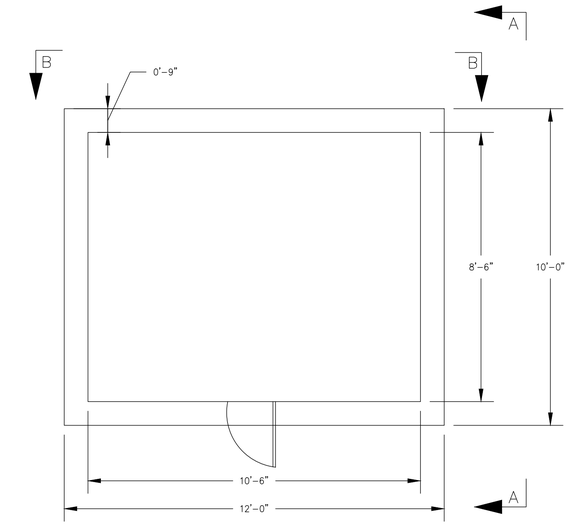

FLOOR PLAN

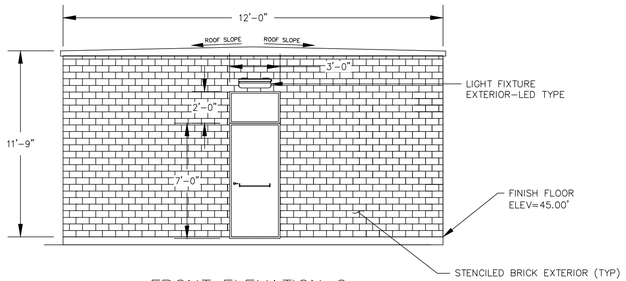

FRONT ELEVATION C
SCALE: N.T.S.

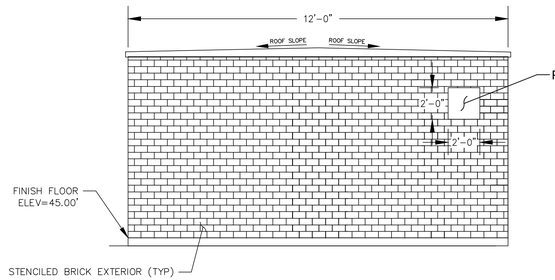

BACK ELEVATION B
SCALE: N.T.S.

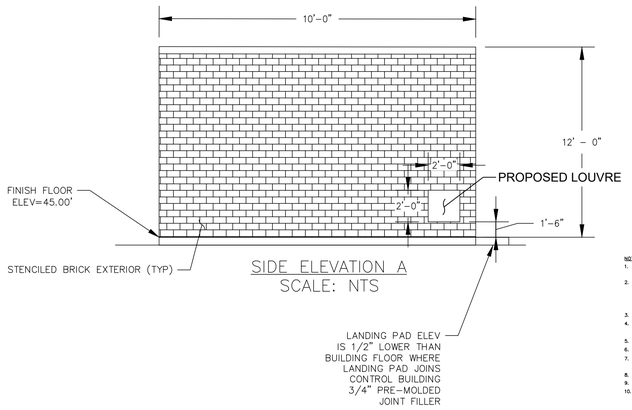

SIDE ELEVATION A
SCALE: NTS

NOTES:
1. PROVIDE DEFERRED SUBMITTAL TO THE CITY OF HOUSTON CODE ENFORCEMENT FOR STRUCTURAL DESIGN OF PRECAST CONCRETE BUILDING.
2. THE CONTRACTOR SHALL SUBMIT FABRICATED DRAWINGS OF PRE-FABRICATED CONCRETE BUILDINGS AND CONCRETE FOUNDATIONS SIGNED AND SEALED BY A PROFESSIONAL ENGINEER IN THE STATE OF TEXAS AS SHOWN ON DRAWINGS FOR APPROVAL BY ENGINEER. PLATFORM MUST BE MANUFACTURED BY A CITY OF HOUSTON APPROVED FABRICATOR. A LIST OF APPROVED FABRICATORS CAN BE FOUND AT THE FOLLOWING LINK: https://www.houstonpermitcenter.org/resources?keys=approved+fabricators
3. THE BUILDING IS GENERAL PURPOSE, NON-CLASSIFIED, NON-BLAST RATED.
4. THE HVAC UNITS SHALL BE SIZED BASED ON HEAT LOSS CALCULATIONS. COORDINATE AC/HEAT PUMP OPENING SIZE WITH SELECTED MANUFACTURE'S RECOMMENDATIONS.
5. BUILDING DOOR SHALL BE OF 316 STAINLESS STEEL TYPE.
6. THE SINGLE ENTRANCE DOORS SHALL BE 36" (WIDE) X 84" (HEIGHT).
7. OPENINGS FOR BELLESS FAN (24"X24") ON TOP OF WALL ELEVATION WITH 24"X24" LOUVER ON THE BOTTOM. BOTH UNITS SHALL BE PROVIDED WITH REMOVABLE COVERS FOR STANDBY USE.
8. FOR LIGHTING PLAN SEE DRAWING LOX-E-07.
9. WALL UNITS SHALL BE HEAVY-DUTY EXTERIOR WALL MOUNTED HEAT PUMP TYPE UNIT. WINDOW AC UNITS NOT ALLOWED.
10. CONTRACTOR SHALL VERIFY EQUIPMENT OPENING WITH THE SELECTED MANUFACTURER'S RECOMMENDATION.

DWG No	REV
3022800188-200	1

USE 3" STANDOFF ON BACK WALL

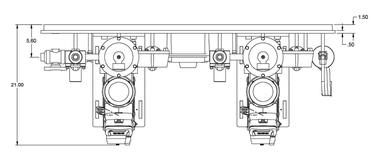

PLAN VIEW

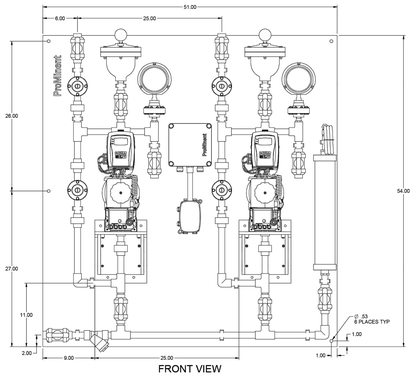

FRONT VIEW

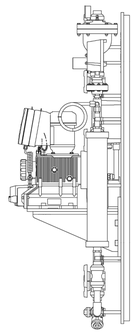

SIDE VIEW

NOTES:
1. ALL PIPING AND FITTINGS SHALL BE 3/4" SCH. 80 PVC SOCKET WELD UNLESS OTHERWISE REQUIRED BY COMPONENTS.
2. SEAL MATERIAL IS VITON UNLESS OTHERWISE SPECIFIED.
3. ALL MOUNTING HARDWARE IS 316SS UNLESS SPECIFIED BY CUSTOMER.
4. ALL PIPING AND COMPONENTS SHALL BE SECURED AT BUILDERS DISCRETION AS SEEN FIT.
5. ALL INTERCONNECTING PIPING, HARDWARE, GASKETS, SEALS, AND WIRING ARE DONE ON SITE BY OTHERS.
6. ALL INTERCONNECTING PIPING SHALL BE FULLY & INDEPENDENTLY SUPPORTED BY OTHERS.
7. TOLERANCE ON ALL TERMINATION POINTS ARE +/- 3/8" (10mm) UNLESS SPECIFIED BY OTHERS.
8. PUMP MAXIMUM CAPACITY RATES BASED UPON PUMPING WATER.

TESTING:
-HYDROSTATIC TEST PRESSURE: 150 PSIG
-DESIGN OPERATING PRESSURE: 50 PSIG
-DESIGN FLOW TEST PRESSURE: 100 PSIG

TESTING CONDITIONS:
-TEST TYPE: HYDROSTATIC
-TEST MEDIUM: WATER
-TEST TEMPERATURE: AMBIENT 68F (20C)
-TEST DURATION: 30 MIN. (MINIMUM)

CHEMICAL SERVICE:
-ALUM

NETWORK NUMBERS:
-MECHANICAL: 1107954
-ELECTRICAL: 1107955
-SPARE PARTS: 1107957

REV'S	DATE	DESCRIPTION	BY	APP'D	REV'D
1	04/27/23	AS BUILT	ALS		
0	08/04/22	RELEASED FOR PRODUCTION	ALS		
A	06/29/22	FIRST ISSUE	ALS		

REVISIONS

CUSTOMER

JOB No	PURCHASE ORDER No
3022800188	2388-10283-6484

TITLE: FERROUS SULFATE FEED SKID
GENERAL ARRANGEMENT DRAWING

THIS DRAWING IS THE PROPERTY OF PROMINENT FLUID CONTROLS INC. AND SHALL NOT BE COPIED OR TRANSFERRED WITHOUT THE WRITTEN CONSENT OF PROMINENT FLUID CONTROLS INC.

ENGINEERS SEAL

ProMinent® THE PROMINENT GROUP OF COMPANIES
PITTSBURGH, PA USA WWW.PROMINENT.US
PROMINENT FLUID CONTROLS INC.
RIDC PARK WEST
135 INDUSTRY DRIVE,
PITTSBURGH P.A., USA, 15275
TEL 412 787 2484 FAX 412 787 6154

DESIGNED	ALS	APPROVED	SK
DRAWN	ALS	SCALE	N.T.S.
CHECKED	EL	DATE	06/29/22

DWG No	REV	PAGE
3022800188-200	1	1/2

DWG No	REV
3022800188-200	1

ITEMS SHIPPING LOOSE:
(1) TWO PUMP SCADA PANEL (P/N 7745682)
(2) SPARE PART SET (P/N 1039953)

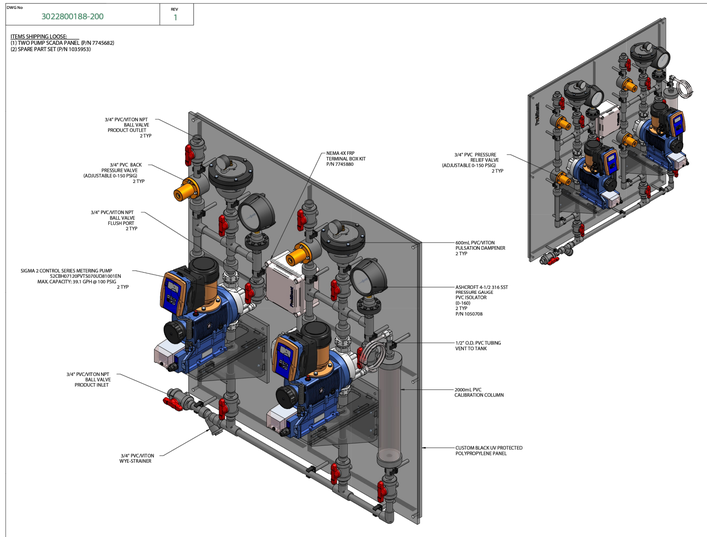

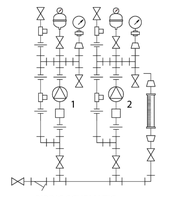

PIPING SCHEMATIC

REV	DATE	DESCRIPTION	BY	APP'D	REV'D
1	04/27/23	AS BUILT	ALS		
0	08/04/22	RELEASED FOR PRODUCTION	ALS		
A	06/29/22	FIRST ISSUE	ALS		

REVISIONS

CUSTOMER

JOB No	PURCHASE ORDER No
3022800188	2388-10283-6484

TITLE: FERROUS SULFATE FEED SKID
GENERAL ARRANGEMENT DRAWING

THIS DRAWING IS THE PROPERTY OF PROMINENT FLUID CONTROLS INC. AND SHALL NOT BE COPIED OR TRANSFERRED WITHOUT THE WRITTEN CONSENT OF PROMINENT FLUID CONTROLS INC.

ENGINEERS SEAL

ProMinent® THE PROMINENT GROUP OF COMPANIES
PITTSBURGH, PA USA WWW.PROMINENT.US
PROMINENT FLUID CONTROLS INC.
RIDC PARK WEST
135 INDUSTRY DRIVE,
PITTSBURGH P.A., USA, 15275
TEL 412 787 2484 FAX 412 787 6154

DESIGNED	ALS	APPROVED	SK
DRAWN	ALS	SCALE	N.T.S.
CHECKED	EL	DATE	06/29/22

DWG No	REV	PAGE
3022800188-200	1	2/2

IDS Engineering Group
13430 NW. Freeway, Suite 700
Houston, Tx. 77040
713.462.3178
TxEng Firm 2726 | TxSurv Firm 10110700

SURVEYED BY: KUO & ASSOCIATES, INC.
TBPE FIRM #F-4578; TBPLS FIRM #1007560

THIS DOCUMENT IS RELEASED FOR THE PURPOSE OF REVIEW UNDER THE AUTHORITY OF MARCEL KHOUW, P.E. 101807 ON 05/27/2026. IT IS NOT TO BE USED FOR CONSTRUCTION PURPOSES.

CITY OF HOUSTON
HOUSTON PUBLIC WORKS

LIFT STATION RENEWAL AND REPLACEMENT FY 2023

SCOTT NO. 3 LIFT STATION ODOR CONTROL BUILDING DETAIL

WBS NUMBER	FOR CITY OF HOUSTON USE ONLY
R-000267-0179-4	
DRAWING SCALE	
HORIZ: N.T.S. VERT: N/A	
CITY OF HOUSTON PM	
NAWARAJ PANTA, P.E.	

DWG. NO.	SHEET NO. 126 OF 361
SCT-A-02	

PLOTTED: 5/13/2026 6:32 PM
FILE PATH: \\idseg.com\FS\Projects\0000\005708500 CoH Lift Stations - FY 2023\CAD\DWG\PRODUCTION\127-SCOTT No 3 RECORD DWG.dwg

NO.	DATE	REVISION	APP.

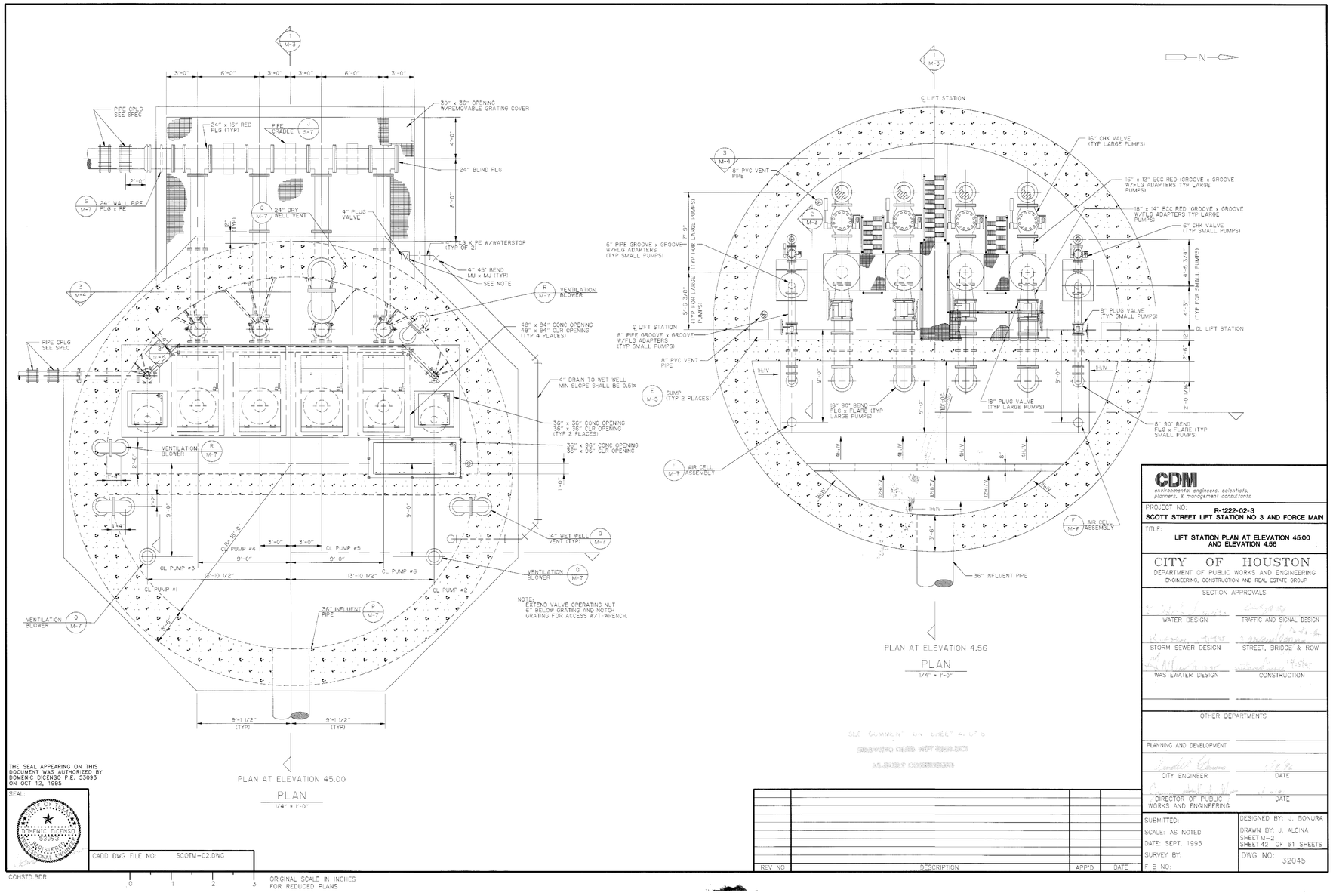

THE SEAL APPEARING ON THIS DOCUMENT WAS AUTHORIZED BY DOMENIC DICENSO P.E. 53093 ON OCT 12, 1995

SEAL:

DOMENIC DICENSO
53093
LICENSED
PROFESSIONAL
ENGINEER

ACM
COHSTD.BDR

CADD DWG FILE NO: SCOTM-02.DWG

0 1 2 3
ORIGINAL SCALE IN INCHES FOR REDUCED PLANS

SEE COMMENT ON SHEET 4 OF 5
DRAWING NEED NOT REFLECT AS-BUILT CONDITIONS

REV. NO.	DESCRIPTION	APP'D	DATE

CDM
environmental engineers, scientists, planners, & management consultants

PROJECT NO: R-1222-02-3
SCOTT STREET LIFT STATION NO 3 AND FORCE MAIN

TITLE: LIFT STATION PLAN AT ELEVATION 45.00 AND ELEVATION 4.56

CITY OF HOUSTON
DEPARTMENT OF PUBLIC WORKS AND ENGINEERING
ENGINEERING, CONSTRUCTION AND REAL ESTATE GROUP

SECTION APPROVALS

WATER DESIGN	TRAFFIC AND SIGNAL DESIGN
STORM SEWER DESIGN	STREET, BRIDGE & ROW
WASTEWATER DESIGN	CONSTRUCTION

OTHER DEPARTMENTS

PLANNING AND DEVELOPMENT	
CITY ENGINEER	DATE
DIRECTOR OF PUBLIC WORKS AND ENGINEERING	DATE

SUBMITTED:	DESIGNED BY: J. BONURA
SCALE: AS NOTED	DRAWN BY: J. ALCINA
DATE: SEPT, 1995	SHEET M-2 SHEET 42 OF 61 SHEETS
SURVEY BY:	DWG NO: 32045
F.B NO:	

IDS Engineering Group
13430 NW. Freeway, Suite 700
Houston, Tx. 77040
713.462.3178
TxEng Firm 2726 | TxSurv Firm 10110700

SURVEYED BY: KUO & ASSOCIATES, INC.
TBPE FIRM #F-4578; TBPLS FIRM #1007560

THIS DOCUMENT IS RELEASED FOR THE PURPOSE OF REVIEW UNDER THE AUTHORITY OF MARCEL KHOUW, P.E. 101807 ON 05/27/2026. IT IS NOT TO BE USED FOR CONSTRUCTION PURPOSES.

CITY OF HOUSTON
HOUSTON PUBLIC WORKS

LIFT STATION RENEWAL AND REPLACEMENT FY 2023

EXISTING LIFT STATION RECORD DRAWING (SHEET 1 OF 2)

WBS NUMBER	FOR CITY OF HOUSTON USE ONLY
R-000267-0179-4	
DRAWING SCALE	
HORIZ: N/A VERT: N/A	
CITY OF HOUSTON PM	
NAWARAJ PANTA, P.E.	
SHEET NO. 127 OF 361	

DWG. NO. SCT-C-12

FOR REFERENCE ONLY

PLOTTED: 5/13/2026 6:32 PM
FILE PATH: \\idseg.com\FS\Projects\0000\005708500 CoH Lift Stations - FY 2023\CAD\DWG\PRODUCTION\128-SCOTT No 3 RECORD DWG.dwg

NO.	DATE	REVISION	APP.

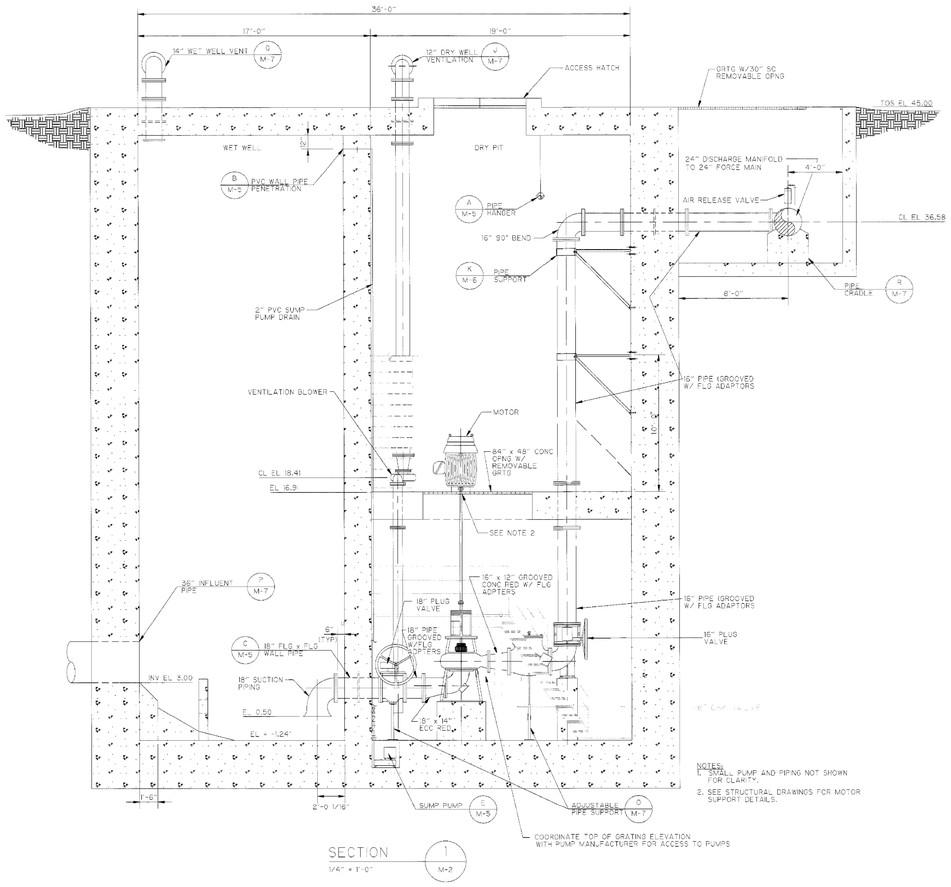

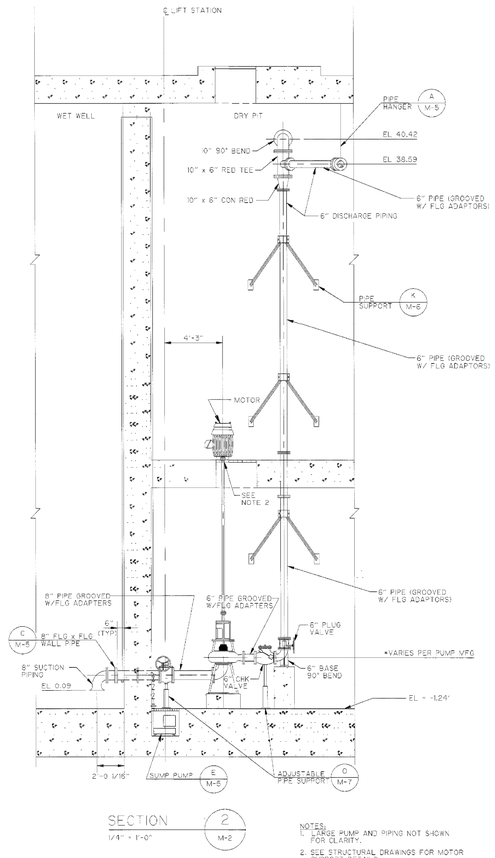

PIPING IN LIFT STATION WAS CHANGED BY SUBMITTAL 25A SHOWN ON THE FOLLOWING TWO DRAWINGS BY COHEN INDUSTRIAL SUPPLY.
~~DRAWINGS DATED "NOT RELEASED"~~
AS-BUILT CONDITION

SEAL:
DOMENIC DICENSO 53093 STATE OF TEXAS

THE SEAL APPEARING ON THIS DOCUMENT WAS AUTHORIZED BY DOMENIC DICENSO P.E. 53093 ON OCT 12, 1995

CADD DWG FILE NO: SCOTM-3.DWG

COHSTD.BDR

0 1 2 3 ORIGINAL SCALE IN INCHES FOR REDUCED PLANS

REV. NO	DESCRIPTION	APP'D	DATE

FOR REFERENCE ONLY

CDM
environmental engineers, scientists, planners, & management consultants

PROJECT NO: R-1222-02-3
SCOTT STREET LIFT STATION NO 3 AND FORCE MAIN

TITLE: LIFT STATION SECTIONS

CITY OF HOUSTON
DEPARTMENT OF PUBLIC WORKS AND ENGINEERING
ENGINEERING, CONSTRUCTION AND REAL ESTATE GROUP

SECTION APPROVALS

WATER DESIGN	TRAFFIC AND SIGNAL DESIGN
STORM SEWER DESIGN	STREET, BRIDGE & ROW
WASTEWATER DESIGN	CONSTRUCTION

OTHER DEPARTMENTS

PLANNING AND DEVELOPMENT	
CITY ENGINEER	DATE
DIRECTOR OF PUBLIC WORKS AND ENGINEERING	DATE

SUBMITTED:	DESIGNED BY: J. BONURA
SCALE: AS NOTED	DRAWN BY: J. ALCINA
DATE: SEPT. 1995	SHEET M-3
SURVEY BY:	SHEET 43 OF 61 SHEETS
F. B. NO:	DWG NO: 32045

IDS Engineering Group
13430 NW. Freeway, Suite 700
Houston, Tx. 77040
713.462.3178
TxEng Firm 2726 | TxSurv Firm 10110700

SURVEYED BY: KUO & ASSOCIATES, INC.
TBPE FIRM #F-4578; TBPLS FIRM #1007560

THIS DOCUMENT IS RELEASED FOR THE PURPOSE OF REVIEW UNDER THE AUTHORITY OF MARCEL KHOUW, P.E. 101807 ON 05/27/2026. IT IS NOT TO BE USED FOR CONSTRUCTION PURPOSES.

CITY OF HOUSTON
HOUSTON PUBLIC WORKS

LIFT STATION RENEWAL AND REPLACEMENT FY 2023

EXISTING LIFT STATION RECORD DRAWING (SHEET 2 OF 3)

WBS NUMBER	FOR CITY OF HOUSTON USE ONLY
R-000267-0179-4	
DRAWING SCALE	
HORIZ: N/A VERT: N/A	
CITY OF HOUSTON PM	
NAWARAJ PANTA, P.E.	

DWG. NO.	SHEET NO. 128 OF 361
SCT-C-13	

PLOTTED: 5/13/2026 6:32 PM

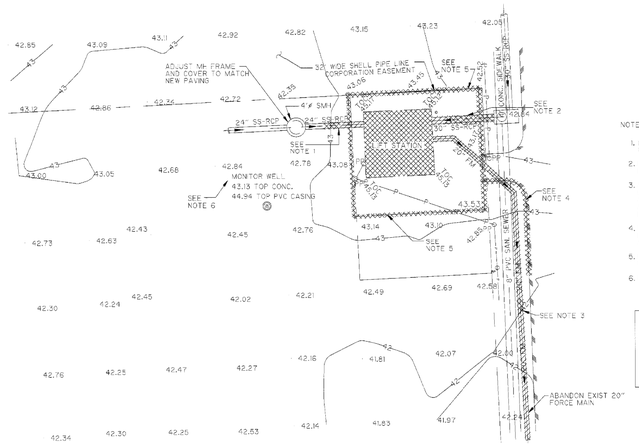

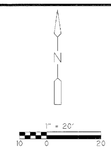

NOTES:

1. REMOVE 24" RCP AS SHOWN, AFTER TEMPORARY MH HAS BEEN INSTALLED AS SHOWN ON SHT. C-1.
2. REMOVE 30" RCP AS SHOWN, AFTER MH HAS BEEN INSTALLED AS SHOWN ON SHT. C-1.
3. ABANDON 20" CLASS 150 PRE-TENSIONED CONC. CYLINDER PIPE. THE 20" PIPE SHALL BE REMOVED AS REQUIRED TO CONSTRUCT THE 24" FORCE MAIN. AFTER THE PROPOSED 16" FORCE MAIN HAS BEEN INSTALLED AND IS IN SERVICE.
4. REMOVE EXIST. PAVING AS REQUIRED TO MATCH INSTALLATION OF NEW DRIVEWAY AND PAVING AS SHOWN ON SHT. C-2.
5. REMOVE EXISTING CHAIN LINK FENCE AND INSTALL NEW FENCE AS SHOWN ON SHT. C-1.
6. REMOVE EXISTING MONITOR WELL.

SITE PLAN DEMOLITION LEGEND:

- TO BE ABANDONED IN PLACE
- TO BE REMOVED

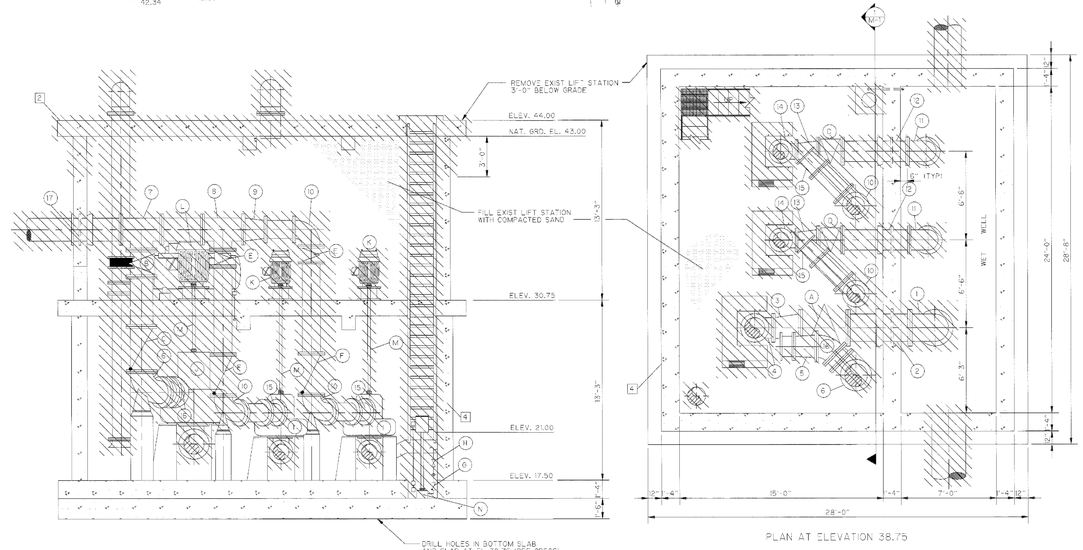

LIFT STATION DEMOLITION LEGEND

SYMBOL	DESCRIPTION
1	TO BE REMOVED, SALVAGED AND DELIVERED TO OWNER.
2	TO BE REMOVED.
3	TO REMAIN IN SERVICE.
4	TO BE ABANDONED.
5	TO BE REHABILITATED/RETROFITTED.
6	TO BE REMOVED AND REPLACED WITH NEW EQUIPMENT.
7	TO BE REMOVED AND/OR RELOCATED, REHABILITATED/RENOVATED AND REUSED IN PROJECT.

FITTING SCHEDULE

SYMBOL	DESCRIPTION	DEMOLITION REQUIRED
1	24" ∅ 90° BELL MOUTH x FLG	2
2	24" ∅ x 1'-10" WALL PIPE, FLG x BELL	4
3	24" x 18" FLG'D ECC RED	1
4	18" ∅ FLG'D 90° BEND	1
5	20" x 18" FLG'D ECC RED	1
6	20" ∅ FLG'D 90° BASE BEND	1
7	20" FLG'D TEE	1
8	20" x 20" x 16" FLG'D TEE	1
9	20" x 16" FLG'D CONC RED	1
10	16" ∅ FLG'D 90° BEND	1
11	18" ∅ 90° BELL MOUTH x FLG	2
12	18" ∅ x 1'-10" WALL PIPE, FLG x BELL	4
13	18" x 14" FLG'D ECC RED	1
14	14" ∅ FLG'D 90° BEND	1
15	16" x 14" FLG'D CONC RED	1
16	20" ∅ FLG'D 45° BEND	1
17	20" ∅ x 1'-10" WALL PIPE, FLG x BELL	2

EQUIPMENT SCHEDULE

SYMBOL	DESCRIPTION	DEMOLITION REQUIRED
A	24" FLG'D PLUG VALVE W/ HANDWHEEL	1
B	20" FLG'D PLUG VALVE W/ HANDWHEEL	1
C	20" FLG'D CHECK VALVE	1
D	16" FLG'D PLUG VALVE W/ HANDWHEEL	1
E	16" FLG'D PLUG VALVE W/ HANDWHEEL	1
F	16" FLG'D CHECK VALVE	1
G	1 1/2" SCR'D, NPT CHECK VALVE	1
H	1 1/2" SCR'D, NPT GATE VALVE	1
I	14" NON CLOG CENTRIFUGAL PUMP	1
J	18" NON CLOG CENTRIFUGAL PUMP	1
K	40 HP ELECTRIC MOTOR	1
L	200 HP ELECTRIC MOTOR	1
M	MOTOR SHAFT	1
N	SUMP PUMP	1

SEAL



THE SEAL APPEARING ON THIS DOCUMENT WAS AUTHORIZED BY DOMENIC DICENSO P.E. 53093 ON OCT 12, 1995

CADD DWG FILE NO: SCOTM-1.DWG

COHSTD.BDR

0 1 2 3

ORIGINAL SCALE IN INCHES FOR REDUCED PLANS

NO.	DATE	REVISION	APP.

CDM
environmental engineers, scientists, planners, & management consultants

PROJECT NO: R-1222-02-3
SCOTT STREET LIFT STATION NO 3 AND FORCE MAIN

TITLE: EXISTING LIFT STATION SITE PLAN AND LIFT STATION DEMOLITION PLAN

CITY OF HOUSTON
DEPARTMENT OF PUBLIC WORKS AND ENGINEERING
ENGINEERING, CONSTRUCTION AND REAL ESTATE GROUP

SECTION APPROVALS

WATER DESIGN	TRAFFIC AND SIGNAL DESIGN
STORM SEWER DESIGN	STREET, BRIDGE & ROW
WASTEWATER DESIGN	CONSTRUCTION

OTHER DEPARTMENTS

PLANNING AND DEVELOPMENT

CITY ENGINEER — DATE

DIRECTOR OF PUBLIC WORKS AND ENGINEERING — DATE

SUBMITTED:
SCALE: AS NOTED
DATE: SEPT, 1995
SURVEY BY:
F. B. NO:

DESIGNED BY: J. BONURA /J. SWOBODA
DRAWN BY: J. ALCINA
SHEET M-1
SHEET 41 OF 61 SHEETS
DWG NO: 32045

IDS Engineering Group
13430 NW. Freeway, Suite 700
Houston, Tx. 77040
713.462.3178
TxEng Firm 2726 | TxSurv Firm 10110700

SURVEYED BY: KUO & ASSOCIATES, INC.
TBPE FIRM #F-4578; TBPLS FIRM #1007560

THIS DOCUMENT IS RELEASED FOR THE PURPOSE OF REVIEW UNDER THE AUTHORITY OF MARCEL KHOUW, P.E. 101807 ON 05/27/2026. IT IS NOT TO BE USED FOR CONSTRUCTION PURPOSES.

CITY OF HOUSTON
HOUSTON PUBLIC WORKS

LIFT STATION RENEWAL AND REPLACEMENT FY 2023

EXISTING LIFT STATION RECORD DRAWING (SHEET 3 OF 3)

WBS NUMBER	FOR CITY OF HOUSTON USE ONLY
R-000267-0179-4	
DRAWING SCALE	
HORIZ: N/A VERT: N/A	
CITY OF HOUSTON PM	
NAWARAJ PANTA, P.E.	
SHEET NO. 129 OF 361	

DWG. NO. SCT-C-14

FOR REFERENCE ONLY

FILE PATH: \\idseg.com\FS\Projects\0000\005708500 CoH Lift Stations - FY 2023\CAD\DWG\PRODUCTION\129-SCOTT No 3 RECORD DWG.dwg

PLOTTED: 5/21/2019 1:28 PM

FILE PATH: G:\COMMERCIAL PROJECTS\24137 - Lift Station Rehab & Construction\STRUCTURAL\JV_DWGS\XREF\24137-TBlock.dwg

NO.	DATE	REVISION	APP.

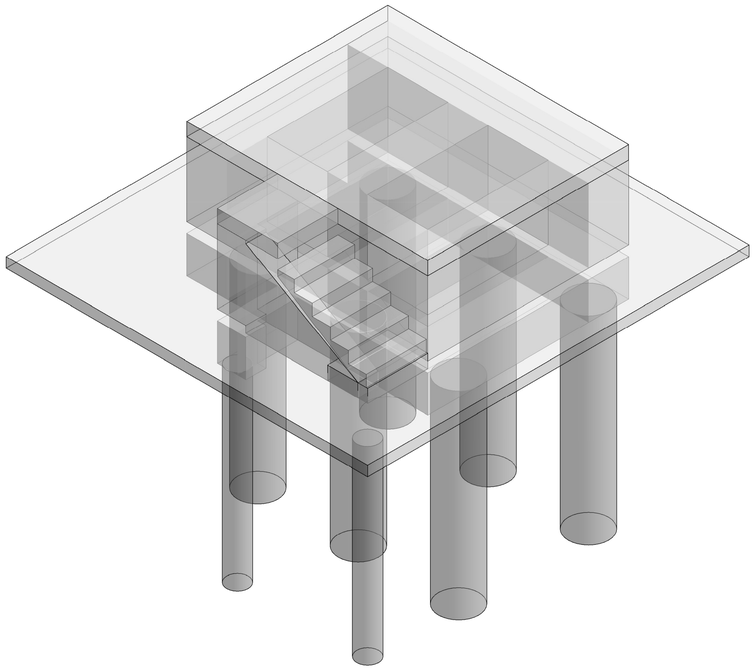

1 ODOR CONTROL BUILDING 3D

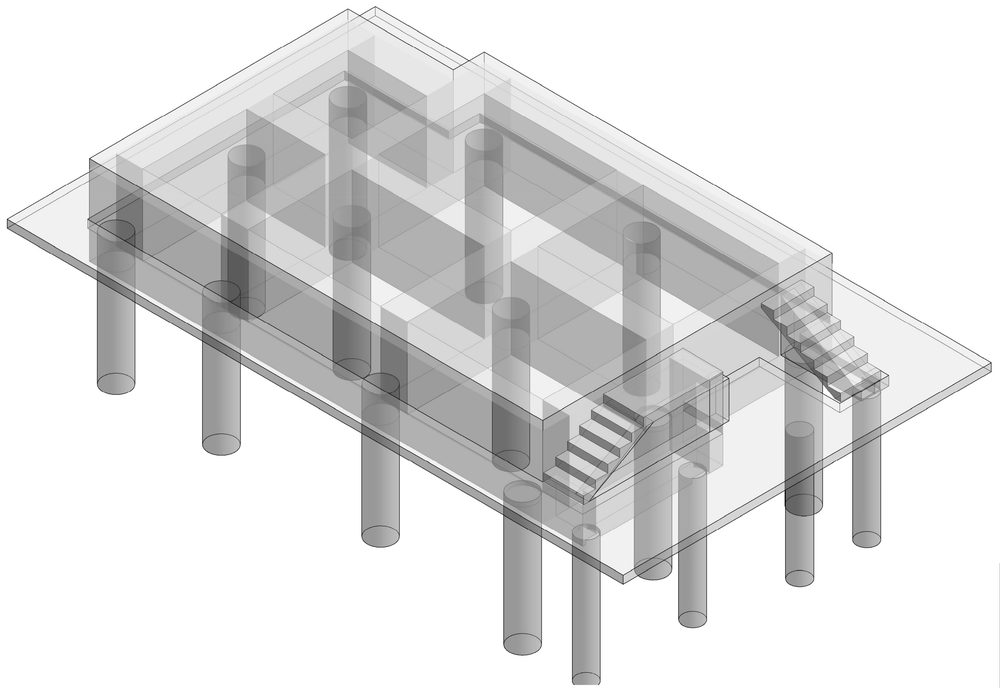

2 ELECTRICAL BUILDING 3D

IDS Engineering Group
13430 NW. Freeway, Suite 700
Houston, Tx. 77040
713.462.3178
TxEng Firm 2726 / TxSurv Firm 10110700

CONCEPT ENGINEERS
TX. FIRM REGISTRATION # F-04417
Structures for the whole community

PRELIMINARY
NOT FOR CONSTRUCTION,
BIDDING, OR PERMIT PURPOSES.
FOR REVIEW ONLY.
DAVID MOORE
TEXAS LICENSE NO. 139405

Date: 05/08/26

CITY OF HOUSTON
DEPARTMENT OF PUBLIC WORKS AND ENGINEERING

LIFT STATION RENEWAL AND REPLACEMENT FY 2023

SCOTT ST #3 LIFT STATION 3D MODEL

WBS NUMBER	FOR CITY OF HOUSTON USE ONLY
R-000267-0179-3	
DRAWING SCALE	
AS NOTED	
CITY OF HOUSTONPM	
NAWARAJ PANTA, P.E.	
SHEET NO. OF	

DWG. NO. SCT-S-01

IDS JOB No. 0057-085-00

PLOTTED: 5/21/2019 1:28 PM

DESIGN CRITERIA

1. DESIGN CODE INTERNATIONAL BUILDING CODE 2021 WITH CITY OF HOUSTON AMENDMENTS
2. DESIGN LOADS:
   A. LIVE LOADS: (PSF)DEAD LOADS

SLABS OF GRADE	100 PSF	RE: CIVIL FOR GENERATOR AND
STORAGE & MECHANICAL	150 PSF	ELECTRICAL BUILDING WEIGHTS

   B. DEAD LOADS (SUPERIMPOSED)

SLABS OF GRADE	15 PSF	
STORAGE & MECHANICAL	15 PSF	

	UNIFORM LOADS	CONCENTRATED LOADS
STAIRS & EXISTING WAY	100 PSF	300 LBS
HANDRAILS & GUARD RAILS	50 LB/FT	200 LBS

3. WIND SPEED 147 MPH 3 SEC. GUST (ULTIMATE)
   EXPOSURE CATEGORY "C"
   RISK CATEGORY III
   DESIGN WIND FORCE ON FRP BUILDING XX LBS
   DESIGN WIND FORCE ON ELECTRICAL BUILDING XX LBS

GENERAL NOTES

1. THE CONTRACTOR SHALL COMPARE THE STRUCTURAL DRAWINGS WITH THE ARCHITECTURAL, CIVIL, PLUMBING, MECHANICAL AND ELECTRICAL DRAWINGS AS TO LAYOUT DIMENSIONS AND ELEVATIONS. ALL DISCREPANCIES, IF ANY ARE FOUND, SHALL BE REPORTED TO THE ARCHITECT FOR PROPER ADJUSTMENT BEFORE PROCEEDING WITH WORK. ANY DISCREPANCIES WITH THE STRUCTURAL DOCUMENTS SHALL BE IMMEDIATELY BROUGHT TO THE ATTENTION OF THE ARCHITECT/ENGINEER PRIOR TO THE SUBMISSION OF BIDS OF PROPOSALS, BEFORE COMMENCING THE WORK IN QUESTION. NO FIELD CHANGES OR DEVIATIONS FROM THE DESIGN ARE TO BE MADE WITHOUT PRIOR WRITTEN APPROVAL OF THE ARCHITECT AND/OR STRUCTURAL ENGINEER. NO CHANGE ORDER CONSIDERATION WILL BE GIVEN TO CHANGES FOR WHICH THE ARCHITECT AND/OR ENGINEER WERE NOT CONTACTED PRIOR TO CONSTRUCTION OF THE AFFECTED ITEM.
2. IN THE EVENT THAT CERTAIN FEATURES OF THE CONSTRUCTION ARE NOT FULLY SHOWN IN THE DRAWING OR CALLED OUT IN THE STRUCTURAL NOTES OR IN THE SPECIFICATIONS, THEN SUCH CONSTRUCTION SHALL BE IN THE SAME CHARACTER FOR SIMILAR CONDITIONS THAT ARE SHOWN OR CALLED FOR.
3. SEE ARCHITECTURAL DRAWINGS FOR FLOOR ELEVATIONS, SLOPE, AND THE LOCATION OF DEPRESSED FLOOR AREAS, AND OTHER REQUIREMENTS AT COLUMNS, WALLS, STAIRWELLS, SLABS, ETC. THE CONTRACTOR SHALL COMPARE THE STRUCTURAL SECTIONS WITH THE ARCHITECTURAL SECTIONS AND REPORT ANY DISCREPANCY TO THE ARCHITECT PRIOR TO FABRICATING OR INSTALLING STRUCTURAL MEMBERS.
4. PRINCIPAL OPENINGS THROUGH THE FRAMING ARE SHOWN ON DRAWINGS. THE CONTRACTOR SHALL EXAMINE THE ARCHITECTURAL AND MECHANICAL DRAWINGS FOR THE REQUIRED OPENINGS AS HE SHALL PROVIDE FOR ALL OPENINGS WHETHER SHOWN ON THE DRAWINGS OR NOT AND SHALL VERIFY SIZE AND LOCATION OF ALL OPENINGS WITH THE MECHANICAL CONTRACTOR. ANY DEVIATION FROM THE OPENINGS SHOWN ON THE STRUCTURAL DRAWINGS SHALL BE BROUGHT TO THE ENGINEER'S ATTENTION FOR APPROVAL.
5. REFER TO THE SPECIFICATIONS PROVIDED WITH THIS SUBMITTAL FOR THE REQUIRED STRUCTURAL SUBMITTALS THAT MUST BE SUBMITTED FOR E.O.R. REVIEW.
6. SPECIFICATIONS ARE PART OF THE CONSTRUCTION DOCUMENTS AND MUST BE USED IN CONJUNCTION WITH THE DRAWINGS.
7. DETAILS LABELED "TYPICAL DETAILS" ON DRAWINGS APPLY TO SITUATIONS OCCURRING ON THE PROJECT THAT ARE THE SAME OR SIMILAR TO THOSE SPECIFICALLY DETAILED. SUCH DETAILS APPLY WHETHER OR NOT THEY ARE REFERENCED AT EACH LOCATION. NOTIFY E.O.R. OF CONFLICTS REGARDING APPLICABILITY OF "TYPICAL DETAILS".
8. DO NOT LOAD THE SLAB ON GRADE WITH ERECTION CRANES OR ERECTION EQUIPMENT. THE SLAB HAS NOT BEEN DESIGNED FOR CRANE LOADS AND WILL REQUIRE AN INCREASE OF THICKNESS AND/OR REINFORCEMENT. OBTAIN E.O.R. APPROVAL ON PROPOSED CRANE SUPPORT PLAN FOR SLABS PRIOR TO COMMENCING WORK.
9. DO NOT STORE OR STACK CONSTRUCTION MATERIALS ON POURED OR ERECTED FLOOR/ROOFS IN EXCESS OF 80 PERCENT OF LIVE LOAD. CONTRACTOR SHALL ENSURE THAT ALL SUB-CONTRACTORS ARE INFORMED OF LOAD RESTRICTIONS. AVOID IMPACT WHEN PLACING MATERIALS OF POURED OR ERECTED SLABS FLOOR OR ROOF.
10. THE CONTRACT STRUCTURAL DOCUMENTS REPRESENT THE FINISHED STRUCTURE. THE CONTRACTOR IS RESPONSIBLE FOR THE MEANS OR METHODS OF CONSTRUCTION, PROVIDE ALL MEASURES REQUIRED TO PROTECT THE STRUCTURE, WORKMEN AND OTHER PERSONS DURING CONSTRUCTION; INCLUDING SHORING FOR CONSTRUCTION EQUIPMENT, SHORING FOR THE BUILDING, FORMS AND SCAFFOLDING, SHORING FOR THE RETAINING WALLS AND OTHER TEMPORARY SUPPORTS REQUIRED.
11. ALL STAIR MEMBERS INCLUDING, BUT NOT LIMITED TO, STRINGERS AND HANDRAILS SHALL BE DESIGNED BY STAIR ENGINEER AND STEEL FABRICATOR.
12. SHOP DRAWINGS AND OTHER ITEMS SHALL BE SUBMITTED TO THE ENGINEER FOR REVIEW PRIOR TO FABRICATION. ALL SHOP DRAWINGS SHALL BE REVIEWED BY THE GENERAL CONTRACTOR BEFORE SUBMITTAL. THE ENGINEER'S REVIEW IS TO BE FOR CONFORMANCE WITH THE DESIGN CONCEPT AND GENERAL COMPLIANCE WITH THE RELEVANT CONTRACT DOCUMENTS. THE ENGINEER'S REVIEW DOES NOT RELIEVE THE CONTRACTOR OF THE SOLE RESPONSIBILITY TO REVIEW, CHECK AND COORDINATE THE SHOP DRAWINGS PRIOR TO SUBMISSION. THE CONTRACTOR REMAINS SOLELY RESPONSIBLE FOR ERRORS AND OMISSIONS ASSOCIATED WITH THE PREPARATION OF SHOP DRAWINGS AS THEY PERTAIN TO MEMBER SIZES, DETAILS, DIMENSIONS, ETC.
13. SHOP DRAWINGS SHALL BE PREPARED WITH SUFFICIENT DETAIL AND NOTATION FOR FIELD ERECTION AND INSTALLATION. PHOTO COPIES OF THE CONTRACT DRAWINGS FOR USE AS SHOP DRAWINGS WILL NOT BE PERMITTED.

FOUNDATION NOTES

1. THE FOUNDATION SYSTEM HAS BEEN DESIGNED BASED ON THE FOLLOWING RECOMMENDATIONS SPECIFIED IN THE GEOTECHNICAL INVESTIGATION REPORT NUMBER HGT2210460.1.1 (B) BY HVJ ASSOCIATES, INC., DATED 4/2/2026, THE FOUNDATION SYSTEM IS DRILLED STRAIGHT SHAFTS AND AND HAS BEEN DESIGNED USING THE CAPACITIES THAT CAN BE FOUND IN THE GEOTECHNICAL REPORT. REFER TO PLAN FOR TOTAL DEPTH BELOW EXISTING GRADE. CONCRETE SHOULD BE PLACED IN THE DRILLED HOLES WITHIN FOUR HOURS OF EXCAVATION TO REDUCE THE RISK OF GROUNDWATER SEEPAGE, DETERIORATION OF THE FOUNDATION BEARING SURFACE AND UNDERREAM COLLAPSE. REFER TO THE GEOTECHNICAL REPORT.
2. THE CONTRACTOR MUST OBTAIN A COPY OF THE GEOTECHNICAL REPORT DESCRIBED ABOVE AND FOLLOW ALL RECOMMENDATIONS IN REGARDS TO SOIL PREPARATION, COMPACTION, REMOVAL AND FILL REQUIREMENTS AS NECESSARY TO ACHIEVE THE DESIGN SOIL BEARING PRESSURE CAPACITY IF REQUIRED.
3. IN GENERAL SITE PREPARATION SHOULD CONSIST OF REMOVING ANY EXISTING FOUNDATIONS, PAVED AREAS, GRASS, TREE ROOTS, AND STRIPPING ORGANIC TOP SOILS. THE EXPOSED SUBGRADE SHOULD BE PROOF-ROLLED TO DETECT LOCAL WEAK AREAS WHICH SHOULD BE EXCAVATED, PROCESSED, AND RECOMPACTED IN LOOSE LIFTS OF APPROXIMATELY EIGHT-INCH THICKNESS. IN FLOOR SLAB, SUBGRADE SOILS SHOULD BE COMPACTED TO A MINIMUM OF 95% OR THE PROCTOR MAXIMUM DRY DENSITY (ASTM D698) AT A MOISTURE CONTENT WITHIN -1% TO +3% OF MAXIMUM MOISTURE. TREE STUMPS, IF PRESENT, SHOULD BE REMOVED BELOW FLOOR SLAB OR PAVEMENT GRADE, AND REMOVE 2 FEET OF EXISTING SOIL AND REPLACE WITH SELECTED FILL AS PER CITY OF HOUSTON STANDARD CONSTRUCTION SPECIFICATIONS. REFER TO GEOTECHNICAL REPORT.
4. SEE CIVIL DRAWINGS FOR ALL EXTERIOR SLABS AND CURBS AND LIMITS OF EXCAVATION.
5. DURING THE PLACEMENT AND FINISHING OF SLAB, USE FOGGING OR MISTING EQUIPMENT TO APPLY MOISTURE TO THE SLAB AREAS UNTIL FINAL CURING HAS BEGUN TO AVOID EXCESSIVELY RAPID EVAPORATION OF WATER FROM THE SLAB. DO NOT USE SPRAY WATER BOTTLES THAT APPLY LARGE AMOUNTS OF WATER THE SLAB SURFACE
6. FOR ALL REINFORCED CONCRETE FOUNDATION MEMBERS, CONTRACTOR SHALL FOLLOW ALL THE APPLICABLE ITEMS ON THE "REINFORCED CONCRETE NOTES:".
7. PROTECT PIPES AND CONDUITS RUNNING THROUGH WALLS AND SLABS WITH 1/2" EXPANSION MATERIAL.
8. DO NOT PLACE FOOTINGS OR SLABS AGAINST SUBGRADE CONTAINING FREE WATER.
9. MAINTAIN PROPER SITE DRAINAGE DURING CONSTRUCTION TO ENSURE SURFACE RUNOFF AWAY FROM STRUCTURES AND TO PREVENT PONDING OF SURFACE RUNOFF NEAR THE STRUCTURES.
10. KEEP OPEN EXCAVATIONS AROUND BUILDING DRY, BACKFILL AGAINST FOUNDATIONS AND GRADE BEAMS AS SOON AS PRACTICAL. PUMP WATER OUT OF OPEN EXCAVATIONS OF FLOODING PRIOR TO BACKFILLING.

REINFORCED CONCRETE NOTES

1. DETAILING OF CONCRETE REINFORCEMENT AND ACCESSORIES SHALL BE IN ACCORDANCE WITH ACI PUBLICATION 315, LATEST EDITION.
2. CONCRETE REINFORCING SHALL CONFORM TO THE REQUIREMENTS OF ASTM A-615, GRADE 60. WELDED WIRE FABRIC SHALL BE IN ACCORDANCE WITH ASTM A-185.
3. CONCRETE IN ALL AREAS SHALL HAVE SAND AND GRAVEL AGGREGATE CEMENT CONFORMING TO ASTM C 150, TYPE I, AND DESIGNATED COMPRESSIVE STRENGTH (f'c) AT 28 DAYS AS CALLED OUT IN NOTE #4 BELOW. ALSO SEE PROJECT SPECIFICATIONS FOR DIFFERENT AGGREGATE AND COMPRESSIVE STRENGTH REQUIREMENTS.
4. UNLESS NOTED OTHERWISE, CONCRETE SHALL MEET OR EXCEED THE MINIMUM COMPRESSIVE STRENGTH REQUIREMENTS AT 28 DAYS:
   A. CONCRETE DESIGN STRENGTH:
      a. GRADE BEAMS & SLABS ON GRADE: f'c = 4,000 PSI
      b. PIER CAPS, WALLS, STAIRS & ANY OTHER NOT NOTED: f'c = 4,000 PSI
      c. PIERS: f'c = 4,000 PSI
   B. CONCRETE COVER REINFORCEMENT COVER SHALL MEET THE FOLLOWING REQUIREMENTS (UNLESS SPECIFICALLY OTHERWISE IN PLANS):
      a. SLAB ON GRADE 1" TOP
      b. GRADE BEAMS 1 1/2" TOP, 3" BOTTOM, 2" SIDES
      c. DRILLED PIERS 3" ALL SURFACES
      d. COLUMNS 1 1/2" ALL SURFACES

   (SEE SECTION 20.6 ACI 318-19 FOR CONDITIONS NOT NOTED.
5. FLY ASH MAY BE USED TO REPLACE A PORTION OF THE PORTLAND CEMENT, THE RATIO OF FLY ASH TO THE TOTAL OF THE FLY ASH AND CEMENT IN A MIX SHALL NOT EXCEED 20%. FLY ASH SHALL CONFORM TO ASTM C618, TYPE C OR F.
6. IT SHALL BE THE RESPONSIBILITY OF THE CONTRACTOR TO COORDINATE WITH THE CONCRETE SUPPLIER TO ENSURE A PUMPABLE AND WORKABLE MIX. TESTING LAB WILL CONTROL SLUMP AND ONLY TESTING LAB CAN ADD WATER ON JOB SITE. CONCRETE SUPPLIER WILL INFORM TESTING LAB/CONTRACTOR OF MAXIMUM WATER ALLOWABLE THAT CAN BE ADDED ON JOB SITE BEFORE W/C RATIO IS EXCEEDED. THE USE OF PLASTICIZERS, RETARDANTS AND OTHER ADDITIVES SHALL BE AT THE OPTION OF THE CONTRACTOR SUBJECT TO THE APPROVAL OF THE STRUCTURAL ENGINEER. FOLLOW THE RECOMMENDATIONS OF THE MANUFACTURER FOR THE PROPER USE OF ADDITIVES. THE USE OF CALCIUM CHLORIDE OR OTHER CHLORIDE BEARING SALTS SHALL NOT BE PERMITTED.
7. CONCRETE SLUMP TESTS SHALL BE MADE BEFORE AND AFTER THE ADDITION OF ADMIXTURES AND MAY BE TAKEN AT THE BACK OF THE TRUCK. CONCRETE FOR THE PREPARATION OF TEST CYLINDERS SHALL BE TAKEN FROM THE HOSE END FOR CONCRETE PLACED BY PUMP.
8. ALL REINFORCING STEEL SHALL BE LAPPED PER THE LATEST EDITION OF THE ACI-318-19. SPLICES. CORNERS AND INTERSECTIONS WITH STANDARD 90 DEGREE BEND OR CORNER BARS. LAP TOP BARS AT CENTER OF SPAN. LAP WELDED WIRE MESH ONE FULL MESH AT SIDE AND END LAPS. DO NOT LAP OR WELD REINFORCEMENT IN THE FIELD UNLESS SPECIFICALLY SHOWN ON STRUCTURAL DRAWINGS OR APPROVED BY E.O.R. WHEN SPECIFICALLY APPROVED, PROVIDE WELDED REINFORCEMENT IN ACCORDANCE WITH ASTM A706, USE LOW HYDROGEN ELECTRODES FOR WELDING OF REINFORCEMENT IN CONFORMANCE WITH "WELDING STEEL, METAL INSERTS AND CONNECTIONS IN REINFORCED CONCRETE CONSTRUCTION" AMERICAN WELDING SOCIETY AWS D1.4 WHERE REQUIRED, PROVIDE DOWELS TO MATCH SIZE AND SPACING OF MAIN REINFORCING.
9. REFER TO ARCHITECTURAL, MECHANICAL, ELECTRICAL AND PLUMBING DRAWINGS FOR ANY OTHER ADDITIONAL SLEEVES, ANCHORS, VENT OPENINGS, ETC., NOT SHOWN ON STRUCTURAL PLANS THAT MIGHT BE REQUIRED.
10. PLACE CONCRETE IN A MANNER SO AS TO PREVENT SEGREGATION OF THE MIX. DELAY FLOATING AND TROWELLING OPERATIONS UNTIL CONCRETE HAS LOST SURFACE WATER SHEEN OR ALL FREE WATER. DO NOT SPRINKLE FREE CEMENT ON THE SLAB SURFACE. FINISHING OF SLAB SURFACES SHALL COMPLY WITH THE RECOMMENDATIONS OF AC1 302.1 AND 304.
11. UNLESS NOTED OTHERWISE ON PLAN, CONTROL JOINTS IN SLAB ON GRADE TO BE LOCATED APPROXIMATELY 225 SQ. FT. GRIDS. ACTUAL LOCATION TO BE DETERMINED BY OWNER OR CONTRACTOR.
12. PROVIDE 7 DAY CURING OF SLAB IMMEDIATELY AFTER FINISHING, USING ONE OF THE FOLLOWING METHODS
   A. CONTINUOUSLY WATERED BURLAP
   B. WATERPROOF MEMBRANES
13. PROTECT THE CONCRETE SURFACE BETWEEN FINISHING OPERATIONS ON HOT, DRY WINDY DAYS OR ANY OTHER TIME THAT PLASTIC SHRINKAGE CRACKS COULD DEVELOP BY USING WET BURLAP, PLASTIC MEMBRANE OR FOGGING. PROTECT CONCRETE SLAB AT ALL TIMES FROM RAIN, HAIL OR OTHER INJURIOUS EFFECTS.
14. UNLESS SPECIFIED CONCRETE MUST REACH THE FOLLOWING PERCENTAGES OF ITS 28-DAY COMPRESSIVE STRENGTH (F'c), BEFORE FORMS MAY BE REMOVED. 40% WALLS, COLUMNS & BEAM SIDES, 70% JOISTS, PANS & BEAM BOTTOMS (IF RESHORED), 85% SHORING FOR FLOOR SYSTEMS (IF NOT SHORED)
15. AN INDEPENDENT CERTIFIED TESTING LABORATORY SHALL VERIFY AND PROVIDE REPORTS CERTIFYING THE FOLLOWING:
   A. CONCRETE PLANT BATCH TICKETS FOR EACH TRUCK TO VERIFY THAT THE CONCRETE MATCHES THE APPROVED DESIGN MIX.
   B. CONCRETE SLUMP IS IN ACCORDANCE WITH APPROVED DESIGN MIX.
   C. CONCRETE PLACEMENT PREPARATIONS ARE IN ACCORDANCE WITH ACI SPECIFICATIONS.
   D. CONTROL / CONTRACTION JOINTS ARE INSTALLED WITHIN THE ACI TIME ALLOWANCE.
   E. PROPER CURING METHODS ARE BEING UTILIZED.
16. NO CONCRETE SHALL BE PLACED OUTSIDE OF THESE SPECIFICATIONS WITHOUT THE ENGINEER'S APPROVAL. ANY ITEMS NOT IN COMPLIANCE WITH THE OUTLINED SPECIFICATION SHALL BE REPORTED TO THE ARCHITECT AND STRUCTURAL ENGINEER WITHIN 24 HOURS.
17. REFER TO ARCHITECTURAL DRAWINGS FOR WATER PROOFING REQUIREMENTS.
18. UNLESS OTHERWISE NOTED ALL VERTICAL REINFORCEMENT ON COLUMNS SHALL BE SPLICED A MINIMUM OF 36 BAR DIAMETERS.
19. THE SHORES FOR THE FLOOR SLAB & BEAMS SHALL BE ADEQUATE TO CARRY THE TOTAL WEIGHT OF THE SLAB SYSTEM TO THE GROUND, ALL SHORING / RESHORING DESIGN SHALL BE THE RESPONSIBILITY OF THE CONTRACTOR.
20. THERE SHALL BE NO HORIZONTAL CONSTRUCTION JOINTS IN CONCRETE POURS. ALL CONSTRUCTION JOINTS SHALL BE MADE IN THE MIDDLE OF THE SPAN. WHEN A BEAM INTERSECTS A GIRDER AT MIDDLE 1/3 OF SPAN, THE JOINTS SHALL BE OFFSET DISTANCE EQUAL TO TWICE THE WIDTH OF THE BEAM. THE LOCATION OF CONSTRUCTION JOINTS SHALL BE APPROVED BY THE STRUCTURAL ENGINEER. ADDITIONAL REINFORCING AT CONSTRUCTION JOINTS SHALL BE SPECIFIED BY THE BEGINNER, SEE TYPICAL DETAIL. PROVIDE 75 FEET MAXIMUM SPACING OF CONSTRUCTION JOINTS IN GRADE BEAMS.
21. THE MAXIMUM WATER TO CEMENT RATIO: 0.50 (MAX) FOR NON-AIR ENTRAINED. AND 0.48 (MAX) FOR AIR ENTRAINED.
22. MAX. AGGREGATE SIZE 3/4 INCH.
23. PROVIDE BAR SUPPORT ACCESSORIES IN ACCORDANCE WITH THE LATEST ACI MANUAL, STANDARD PRACTICE FOR DETAILING REINFORCED CONCRETE STRUCTURES, SUPPORT BEAM REINFORCING ON BEAMS BOLSTERS SPACED NOT MORE THAN 4 FEET ON CENTER.
24. PROVIDE BAR SUPPORTS WITH PLASTIC COATED LEGS OR HOT DIP GALVANIZING AFTER FABRICATION FOR CONCRETE EXPOSED TO VIEW. PROVIDE STAINLESS STEEL BAR SUPPORTS FOR CONCRETE TO RECEIVE A SAND BLAST FINISH.
25. FOR PIPE INSTALLED HORIZONTALLY WITHIN THE SLAB, PROVIDE MAXIMUMS OUTSIDE DIAMETER OF 30% OF SLAB THICKNESS. PLACE CONDUIT OR PIPE BETWEEN THE TOP AND BOTTOM LAYER OF REINFORCEMENT WITH THE CENTER THIRD OF SLAB, DO NOT SPACE CONDUITS OF PIPES CLOSER THAN THREE DIAMETERS OF WIDTHS ON CENTER.
26. CONTRACTOR AND SUPPLIER TO COORDINATE ADDITIONAL ADMIXTURES AND SUBMIT MIX DESIGNS AS REQUIRED FOR MASS CONCRETE. AFTER COMPLETION OF THE EQUIPMENT FOUNDATION, THE CONCRETE SHALL BE INSPECTED AND ALL CRACKS FROM SHRINKAGE AND CONSTRUCTION STRESS SHALL BE REPAIRED.

REINFORCED CONCRETE NOTES CONTINUED

TENSION DEVELOPMENT LENGTH ('ld')

BAR SIZE	f'c= 3000 PSI		f'c= 4000 PSI		f'c= 5000 PSI		f'c= 6000 PSI		f'c= 7000 PSI		f'c= 8000 PSI		f'c= 10000 PSI	
	ld TOP	ld BOT	ld TOP	ld BOT	ld TOP	ld BOT	ld TOP	ld BOT	ld TOP	ld BOT	ld TOP	ld BOT	ld TOP	ld BOT
#3	1'-9"	1'-4"	1'-6"	1'-2"	1'-5"	1'-1"	1'-3"	1'-0"	1'-2"	1'-0"	1'-1"	1'-0"	1'-0"	1'-0"
#4	2'-4"	1'-10"	2'-1"	1'-7"	1'-10"	1'-5"	1'-8"	1'-3"	1'-7"	1'-2"	1'-5"	1'-1"	1'-4"	1'-0"
#5	3'-0"	2'-3"	2'-7"	2'-0"	2'-4"	1'9"	2'-1"	1'-7"	2'-0"	1'-6"	1'-10"	1'-5"	1'-8"	1'-3"
#6	3'-7"	2'-9"	3'-11"	2'-4"	2'-9"	2'-1"	2'-6"	1'-11"	2'-4"	1'-10"	2'-2"	1'-8"	1'-11"	1'-6"
#7	5'-2"	4'-0"	4'-5"	3'-6"	4'-0"	3'-1"	3'-8"	2'-10"	3'-5"	2'-8"	3'-2"	2'-5"	2'-10"	2'-2"
#8	5'-11"	4'-7"	5'-2"	3'-11"	4'-7"	3'-6"	4'-2"	3'-3"	4'-0"	3'-1"	3'-8"	2'-10"	3'-3"	2'-6"
#9	6'-8"	5'-2"	5'-9"	4'-5"	5'-2"	4'-0"	4'-9"	3'-8"	4'-5"	3'-5"	4'-1"	3'-2"	3'-8"	2'-10"
#10	7'-6"	5'-10"	6'-6"	5'-0"	5'-10"	4'-6"	5'-4"	4'-1"	5'-0"	3'-10"	4'-7"	3'-7"	4'-2"	3'-2"
#11	8'-4"	6'-5"	7'-3"	5'-7"	6'-6"	5'-0"	5'-11"	4'-7"	5'-6"	4'-3"	5'-1"	3'-11"	4'-5"	3'-6"

NOTES:
1. TABULATED VALUES ARE APPLICABLE ONLY IF CLEAR SPACING OF BARS BEING DEVELOPED OR SPLICED IS NOT LESS THAN 'db', CLEAR COVER IS NOT LESS THAN 'db' AND STIRRUPS OR TIES THROUGHOUT 'ld' IS NOT LESS THAN CODE MINIMUM, OR CLEAR SPACING OF BARS BEING DEVELOPED OR SPLICED IS NOT LESS THAN 2" 'db' AND CLEAR COVER IS NOT LESS THAN 'db'. FOR OTHER CASES , MULTIPLY TABULATED VALUES BY 1.5.
2. 'TOP' BARS ARE HORIZONTAL REBARS WITH MORE THAN 12 IN OF FRESH CONCRETE CAST BELOW THE BARS AT THE DEVELOPMENT LENGTH.
3. FOR LIGHT WEIGHT CONCRETE MULTIPLY THE TABULATED VALUES BY 1.3.
4. FOR EPOXY COATED BARS, MULTIPLY THE TABULATED VALUES BY 1.5 FOR 'BOT' BARS, OR BY 1.3. FOR TOP BARS.
5. FOR REINFORCEMENT OTHER THAN GRADE 60, MODIFY THE TABULATED VALUES BY THE RATIO OF THE REINFORCEMENT YIELD STRENGTH DIVIDED BY 60 KSI.

TENSION LAP SPLICES-CLASS B- TOP & BOT BARS

BAR SIZE	f'c= 3000 PSI		f'c= 4000 PSI		f'c= 5000 PSI		f'c= 6000 PSI		f'c= 7000 PSI		f'c= 8000 PSI		f'c= 10000 PSI	
	TOP	BOT	TOP	BOT	TOP	BOT	TOP	BOT	TOP	BOT	TOP	BOT	TOP	BOT
#3	2'-4"	1'-9"	2'-0"	1'-6"	1'-10"	1'-5"	1'-8"	1'-4"	1'-7"	1'-4"	1'-5"	1'-4"	1'-3"	1'-0"
#4	3'-1"	2'-4"	2'-8"	2'-1"	2'-5"	1'-10"	2'-2"	1"-8"	2'-1"	1'-7"	1'-11"	1'-5"	1'-8"	1'-7"
#5	3'-10"	3'-0"	3'-4"	2'-7"	3'-0"	2'-4"	2'-9"	2'-1"	2'-7"	2'-0"	2'-4"	1'-10"	2'-1"	1'-8"
#6	4'-8"	3'-7"	4'-0"	3'-1"	3'-7"	2'-9"	3'-3"	2'-8"	2'-11"	2'-4"	2'-10"	2'-2"	2'-6"	1'-11"
#7	6'-9"	5'-2"	5'-10"	4'-6"	5'-3"	4'-0"	4'-9"	3'-8"	4'-6"	3'-5"	4'-2"	3'-2"	3'-8"	2'-10"
#8	7'-9"	5'-11"	6'-8"	5'-2"	6'-0"	4'-7"	5'-5"	4'-2"	5'-1"	3'-11"	4'-9"	3'-8"	4'-3"	3'-3"
#9	8'-8"	6'-8"	7'-6"	5'-2"	6'-9"	5'-2"	6'-2"	4'-9"	5'-9"	4'-5"	5'-4"	4'-1"	4'-9"	3'-8"
#10	9'-10"	7'-6"	8'-6"	5'-9"	7'-7"	5'-10"	6'-11"	5'-4"	6'-6"	5'-0"	6'-0"	4'-7"	5'-4"	4'-2"
#11	10'-11"	8'-4"	9'-5"	7'-3"	8'-5"	6'-6"	7'-8"	5'-11"	7'-2"	5'-6"	6'-8"	5'-1"	5'-11"	4'-5"

NOTES:
1. TABULATED VALUES ARE APPLICABLE ONLY IF CLEAR SPACING OF BARS BEING DEVELOPED OR SPLICED IS NOT LESS THAN 'db', CLEAR COVER IS NOT LESS THAN 'db' AND STIRRUPS OR TIES THROUGHOUT 'ld' IS NOT LESS THAN CODE MINIMUM, OR CLEAR SPACING OF BARS BEING DEVELOPED OR SPLICED IS NOT LESS THAN 2" 'db' AND CLEAR COVER IS NOT LESS THAN 'db'. FOR OTHER CASES , MULTIPLY TABULATED VALUES BY 1.5.
2. 'TOP' BARS ARE HORIZONTAL REBARS WITH MORE THAN 12 IN OF FRESH CONCRETE CAST BELOW THE BARS AT THE DEVELOPMENT LENGTH.
3. FOR LIGHT WEIGHT CONCRETE MULTIPLY THE TABULATED VALUES BY 1.3.
4. FOR EPOXY COATED BARS, MULTIPLY THE TABULATED VALUES BY 1.5 FOR 'BOT' BARS, OR BY 1.3. FOR TOP BARS.
5. FOR REINFORCEMENT OTHER THAN GRADE 60, MODIFY THE TABULATED VALUES BY THE RATIO OF THE REINFORCEMENT YIELD STRENGTH DIVIDED BY 60 KSI.
6. FOR CLASS 'A' SPLICE USE SAME AS TENSION DEVELOPMENT LENGTH.

"Ldh" TENSION DEPELOPMENT (EMBEDMENT) LENGTH FOR STANDARD END HOOKS (GRADE 60 BARS - NORMAL WEIGHT CONCRETE - GENERAL USE)

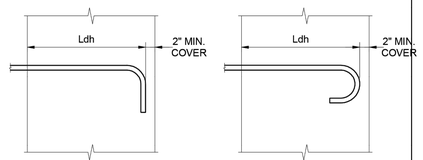

STANDARD 90 HOOK SIDE COVER > 21/2" — STANDARD 180 HOOK SIDE COVER > 21/2"

BAR SIZE	fc=3000 psi	fc=4000 psi	fc=5000 psi	fc=6000 psi
	Ldh	Ldh	Ldh	Ldh
# 3	9"	7"	7"	6"
# 4	11"	10"	9"	8"
# 5	1'-2"	1'-0"	11"	10"
# 5	1'-5"	1'-3"	1'-1"	1'-0"
# 6	1'-7"	1'-5"	1'-3"	1'-2"
# 7	1'-10"	1'-7"	1'-5"	1'-4"
# 8	2'-1"	1'-10"	1'-7"	1'-6"
# 9	2'-4"	2'-0"	1'-10"	1'-8"
# 10	2'-8"	2'-2"	2'-0"	1'-10"

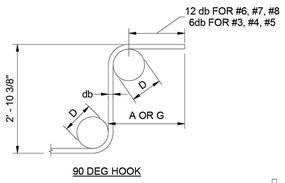

90 DEG HOOK

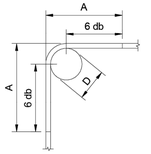

CORNER TIE HOOK

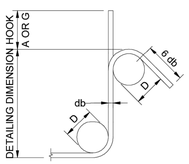

135 DEG HOOK

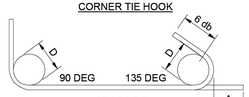

CROSS TIE

STIRRUP & TIE HOOK TYPES

BAR SIZE	D (IN.)	90 DEG HOOK A OR G (IN.)	135 DEG HOOK A OR G (IN.)
#3	1 1/2	4	4
#4	2	4 1/2	4 1/2
#5	2 1/2	6	5 1/2

DWG. NO.	NAWARAJ PANTA, P.E.
SCT-S-02	SHEET NO. 131 OF 361

IDS Engineering Group
13430 NW. Freeway, Suite 700
Houston, Tx. 77040
713.462.3178
TxEng Firm 2726 / TxSurv Firm 10110700

CONCEPT ENGINEERS
TX. FIRM REGISTRATION # F-04417
Structures for the whole community

PRELIMINARY
NOT FOR CONSTRUCTION, BIDDING, OR PERMIT PURPOSES.
FOR REVIEW ONLY.
DAVID MOORE
TEXAS LICENSE NO. 139405

Date: 05/08/26

CITY OF HOUSTON
DEPARTMENT OF PUBLIC WORKS AND ENGINEERING

LIFT STATION RENEWAL AND REPLACEMENT FY 2023

SCOTT ST #3 LIFT STATION GENERAL NOTES (SHEET 1 OF 3)

WBS NUMBER	FOR CITY OF HOUSTON USE ONLY
R-000267-0179-3	
DRAWING SCALE	
AS NOTED	
CITY OF HOUSTONPM	

NO.	DATE	REVISION	APP.

FILE PATH: G:\COMMERCIAL PROJECTS\24137 - Lift Station Rehab & Construction\STRUCTURAL\JV_DWGS\XREF\24137-TBlock.dwg

IDS JOB No. 0057-085-00

PLOTTED: 5/21/2019 1:28 PM

STRUCTURAL STEEL NOTES

1. ALL STRUCTURAL STEEL MEMBERS SHALL CONFORM TO THE FOLLOWING DESIGNATION

W SHAPES	ASTM A992	(50KSI)
SQUARE RECTANGULAR TUBES	ASTM A500 GR. C	(50 KSI)
ROUND TUBES (HSS)	ASTM A500 GR. C	(46 KSI)
STEEL PIPES	ASTM A53 GR. B	(35 KSI)
CHANNELS	ASTM A36	(36 KSI)
PLATES, ANGLES, MISC, STEEL	ASTM A36	(36 KSI)
ANCHOR RODS	ASTM F1554 GR.36	(36 KSI)
HARDENED STEEL WASHERS	ASTM F436	
HEAVY HEX NUTS	ASTM A563	
SEE NOTE 16		

2. ALL STRUCTURAL STEEL SHALL BE DETAILED FABRICATED AND ERECTED IN ACCORDANCE WITH A.I.S.C. STANDARDS 15th EDITION.
3. FOR ALL HIGH STRENGTH BOLTS, HARDENED WASHERS SHALL BE PROVIDED ON NUT SIDE OF BOLT FOR TORQUING AS REQUIRED.
4. ALL WELDING SHALL CONFORM TO STANDARD OF THE AMERICAN WELDING SOCIETY, AWS D1.1 LATEST EDITION STRUCTURAL WELDING CODE
5. E70 ELECTRODES FOR ALL FIELD AND SHOP WELDING SHALL CONFORM TO ANSI/AWS D1.1 LATEST EDITION UNLESS NOTED OTHERWISE ALL WELD SIZES SHALL BE PER AISC CODE. REFER TO NOTE 17 FOR ADDITIONAL INFORMATION.
6. SPLICING STRUCTURAL MEMBERS IS PROHIBITED WITHOUT PRIOR APPROVAL OF THE STRUCTURAL ENGINEER.
7. ANY TEMPORARY SHORING OR BRACING DURING THE CONSTRUCTION PHASE BEFORE COMPLETION OF CONNECTIONS IS THE RESPONSIBILITY OF THE CONTRACTOR.
8. IF NOT SHOWN ON THE DRAWINGS, SUPPORT OF METAL DECK AROUND COLUMN CLOSURE, SCREED PLATES AROUND THE OPENINGS AND EDGE OF SLAB SHALL BE PROVIDED BY THE CONTRACTOR.
9. ALL FIELD CONNECTIONS TO BOLTED WITH A325 BOLTS. BOLTS TO BE LEJEUNE TYPE OR EQUAL. PROVIDE MINIMUM OF TWO BOLTS PER CONNECTION, MINIMUM BOLT DIAMETER 3/4".
10. ALL EXPOSED STEEL SHALL BE HOT DIPPED GALVANIZED.
11. THE BEAM-TO-BEAM AND BEAM-TO-COLUMN SIMPLE SHEAR CONNECTIONS SHOULD DEVELOP THE END REACTION OF THE CONNECTED BEAM. THE END REACTION OF THE CONNECTED BEAM CAN BE OBTAINED FROM THE LOAD CARRYING CAPACITY OF THE BEAM ON THE BASIS OF EQUIVALENT UNIFORM LOADS GIVEN IN THE PART 3 OF AISC MANUAL LATEST EDITIONS (UNLESS LARGER REACTION IS SHOWN ON DRAWINGS). THE MINIMUM SHEARING CAPACITY OF 15 KIPS SHALL BE PROVIDED FOR ALL BEAMS. REFER TO NOTE 22 FOR COMPOSITE BEAM CONNECTION REQUIREMENTS.
12. THE DESIGN OF STRUCTURAL STEEL CONNECTIONS IS THE RESPONSIBILITY OF THE CONTRACTOR AND THE STEEL FABRICATOR. THE DESIGN OF STEEL CONNECTIONS SHALL BE PERFORMED BY A REGISTERED PROFESSIONAL ENGINEER, AND SHALL BE SUBMITTED TO THE ENGINEER OF RECORD FOR REVIEW.
13. STEEL BEAM BEARING ON MASONRY SHALL HAVE A MINIMUM OF 8" BEARING AND ANCHOR AS SHOWN ON THE DRAWINGS, MASONRY SHALL ALSO HAVE SOLID MASONRY OR FULLY GROUTED CELLS FROM STEEL BEARING TO GRADE BEAM BELOW.
14. UNLESS OTHERWISE NOTED, ALL MOMENT CONNECTIONS SHALL BE MADE WITH FULL PENETRATION WELD AND SHALL BE DESIGNED TO DEVELOP FULL CAPACITY OF THE MEMBER.
15. ANY MISCELLANEOUS STEEL NOT SHOWN ON THE PLANS, BUT REQUIRED DUE TO COORDINATION BETWEEN DIFFERENT DISCIPLINES SHALL BE INCLUDED BY THE CONTRACTOR IN THEIR BID.
16. CONNECTION MATERIALS:
    a. BEAM, COLUMNS, STIFFENER PLATES AND DOUBLE PLATES TO MATCH GRADE STEEL OF STRUCTURAL ELEMENT.
    b. ALL CONNECTION MATERIALS, EXCEPT AS OTHERWISE NOTED HEREIN OR IN THE DRAWINGS, INCLUDING BEARING PLATES, GUSSET PLATES, STIFFENER PLATES, ETC. ASTM A36.
17. WELD MINIMUM SIZE & STRENGTH:
    a. PROVIDE MINIMUM SIZE OF FILLET WELDS AS SPECIFIED IN TABLE J2.4 OF AISC MANUAL.
    b. PROVIDE MINIMUM EFFECTIVE THROAT THICKNESS OF PARTIAL PENETRATION GROOVE WELDS AS SPECIFIED ON TABLE J2.3 OF AISC MANUAL.
    c. DEVELOP THE FULL TENSILE STRENGTH OF THE MEMBER ELEMENT JOIN ON ALL SHOP AND FIELD WELDS U.N.O.
    d. WHERE CONNECTIONS ARE NOTED ON DRAWINGS AS MOMENT CONNECTIONS PROVIDE WELDS TO DEVELOP FULL FLEXURAL CAPACITY OF THE LESSER MEMBER.
18. PROVIDE BOLTS, NUTS AND WASHERS THAT ARE HOT DIPPED GALVANIZED ACCORDING TO ASTM A153, CLASS C WHEN USED TO CONNECT STEEL ELEMENTS THAT ARE HOT DIP GALVANIZED AFTER FABRICATION.
19. FABRICATE AND ASSEMBLE STRUCTURAL MEMBERS/ASSEMBLIES IN SHOP TO GREATEST EXTEND POSSIBLE.
20. IF CAMBER OF STRUCTURAL MEMBERS IS INDICATED ON THE DRAWINGS WHERE POSSIBLE, CAMBER OF BEAMS TO BE APPLIED BY COLD BEND PROCESS, CAMBER INDICATED IN THE DRAWINGS ARE INTENDED TO BE FINAL CAMBER AT THE TIME OF ERECTION, AND WITHIN TOLERANCE O MINUS ZERO TO PLUS 1/8" FOR EACH TEM FEET OF MEMBER LENGTH. ALL BEAMS SHALL BE INSTALLED SO THAT NATURAL OF SPECIFIC CAMBER IS ORIENTED UPWARDS.
21. CONTRACTOR SHALL BE RESPONSIBLE FOR ALL ERRORS OF DETAILING ON THE SHOP DRAWINGS, ERRORS IN FABRICATION, AND THE CORRECT FITTING OF STRUCTURAL STEEL MEMBERS.
22. FIELD MODIFICATION TO STRUCTURAL STEEL IS PROHIBITED WITHOUT PRIOR APPROVAL BY THE E.O.R.
23. CLEAN STEEL OF RUST, LOSE MILL SCALE AND OTHER FOREIGN MATERIALS WHERE REQUIRED FOR FABRICATION, FITTING UP. OR WELDING.
24. DO NOT CUT STRUCTURAL STEEL MEMBERS FOR THE WORK OF OTHER TRADES WITHOUT PRIOR REVIEW AND APPROVAL OF THE E.O.R.
25. AFTER FABRICATION, HOT DIP GALVANIZE STRUCTURAL STEEL AND THEIR CONNECTIONS PERMANENTLY EXPOSED TO THE OUTSIDE, SUCH ITEMS INCLUDE BUT ARE NOT LIMITED TO:
    a. SHELF ANGLES.
    b. PARAPET WALL SUPPORTING MEMBERS.
    c. SCREEN WALL SUPPORTING MEMBERS.
    d. EMBEDDED PLATES IN CONCRETE.
    e. BUILDING CLADDING SUPPORT STEEL.
26. EXAMINE THE ARCHITECTURAL AND STRUCTURAL DRAWINGS FOR OTHER ITEMS THAT REQUIRE HOT DIPPED GALVANIZATION
27. PROVIDE NON-SHRINK NON-METALLIC GROUT FOR BASE PLATES WITH MINIMUM 28 DAYS COMPRESSIVE STRENGTH OF 6000 PSI COMPLETE GROUT WORK BEFORE ROOF CONCENTRATED POURING OF A SINGLE STORY BUILDING.
28. STRUCTURAL STEEL CONNECTIONS NOT COMPLETELY DETAILED ON THE DRAWINGS, INCLUDING MATERIAL GRADE & SIZES, WELD SIZES AND NUMBER OF BOLTS SHALL BE DESIGNED BY THE CONTRACTOR UNDER SUPERVISION OF REGISTERED PROFESSIONAL ENGINEER WHO IS REGISTERED ON THE STATE OF TEXAS AN EMPLOYED BY STEEL FABRICATOR. DESIGN CALCULATIONS TO BE SEALED BY FABRICATOR'S REGISTERED PROFESSIONAL ENGINEER, SHOP DRAWINGS SUBMITTED WITHOUT COMPLETE DESIGN CALCULATIONS WILL NOT BE REVIEWED. WHERE PREDESIGNED CONNECTIONS ARE TAKEN DIRECTLY FROM TABLES IN AISC MANUAL. CALCULATIONS NEED TO BE SUBMITTED PROVIDED JOB DESIGN CONDITIONS PRECISELY MATCH THOSE ASSUMED IN THE AISC MANUAL.
29. FURNISH SHOP DRAWINGS FOR E.O.R.'S REVIEW PRIOR TO FABRICATION. INCLUDE WELDING PROCEDURES, TESTING PROGRAMS FOR WELDING AND HIGH STRENGTH BOLTING, COATING MATERIAL, AND ERECTION SEQUENCE IN SHOP DRAWINGS.
30. MILL STEEL COLUMNS ENDS TO FIT FLUSH WITH BASE PLATE, AND END PLATES, FIELD ASSEMBLY OF THESE STEEL ELEMENTS TO THE COLUMNS IS PROHIBITED.
31. PROVIDE HEADED STUDS (SHEAR AND ANCHOR) MADE OF MATERIAL CONFORMING TO AWS D1.1 CLAUSE 9.2.6.
32. PROVIDE DEFORMED ANCHORS MADE OF MATERIAL CONFORMING TO ASTM A1064.
33. WELD STUDS ACCORDING TO MANUFACTURER'S RECOMMENDATIONS. MANUAL ARC (STICK) WELDING OF HEADED STUDS AND/OR DEFORMED ANCHORS IS NOT ALLOWED.
34. PRIOR TO DECK PLACEMENT, VERIFY THAT STEEL BEAMS BEARING ON MASONRY HAVE 6" MINIMUM BEARING AND ARE ANCHORED AS SHOWN ON DRAWINGS.

EXISTING CONSTRUCTION NOTES

1. BEFORE PROCEEDING WITH ANY WORK WITHIN THE EXISTING FACILITY, THE CONTRACTOR SHALL FAMILIARIZE HIMSELF WITH EXISTING STRUCTURAL AND OTHER CONDITIONS. IT SHALL BE THE CONTRACTOR'S RESPONSIBILITY TO PROVIDE ALL NECESSARY BRACING, SHORING, AND OTHER SAFEGUARDS TO MAINTAIN ALL PARTS OF THE EXISTING WORK IN A SAFE CONDITION DURING THE PROCESS OF CONSTRUCTION, AND TO PROTECT FROM DAMAGE THOSE PORTIONS OF THE EXISTING WORK WHICH ARE TO REMAIN.
2. THE CONTRACTOR SHALL FIELD VERIFY THE DIMENSIONS, ELEVATIONS, ETC. NECESSARY FOR THE PROPER CONSTRUCTION AND ALIGNMENT OF THE NEW PORTIONS OF THE WORK TO THE EXISTING WORK. THE CONTRACTOR SHALL MAKE ALL MEASUREMENTS NECESSARY FOR FABRICATION AND ERECTION OF STRUCTURAL MEMBERS. ANY DISCREPANCY SHALL BE IMMEDIATELY BROUGHT TO THE ATTENTION OF THE ENGINEER.
3. WELDING TO AND WITHIN AN EXISTING FACILITY PRESENTS POTENTIAL HAZARDS, INCLUDING:
    A. FIRE HAZARD DUE TO THE EXISTING CONSTRUCTION AND BUILDING CONTENTS.
    B. STRUCTURAL LIQUEFACTION DUE TO WELDING ACROSS THE FULL SECTION OF STRUCTURAL MEMBERS.RECOMMENDATIONS TO PREVENT THESE HAZARDS INCLUDE:
    A. PROTECT EXISTING COMBUSTIBLES PRIOR TO WELDING. KEEP A SEPARATE WATCHMAN AND SEVERAL FIRE EXTINGUISHERS ON HAND
    B. WELD IN SMALL INCREMENTS. ALLOW WELDS TO HARDEN BEFORE CONTINUING TO THE NEXT INCREMENT.
    C. DO NOT LEAVE THE SITE UNTIL SATISFIED THAT NO FIRE HAZARD EXISTS.
4. THE CONTRACTOR SHALL BE RESPONSIBLE FOR THE DESIGN AND ERECTION OF ALL SHORING NECESSARY TO SAFEGUARD THE EXISTING STRUCTURE. THE CONTRACTOR SHALL SUBMIT A DETAILED PLAN FOR SHORING, BRACING, AND PROTECTION OF THE EXISTING CONSTRUCTION.

DEMOLITION NOTES

1. PERFORM DEMOLITION IN A CAREFUL AND CONTROLLED MANNER TO PREVENT DAMAGE TO EXISTING STRUCTURES , UTILITES AND IMPROVEMENTS TO REMAIN.
2. CONTRACTOR SHALL BE SOLEY RESPONSIBLE FOR ALL MEANS, METHODS, SEQUENCES . PROCEDURES, AND SAFETY PRECAUTIONS ASSOCIATED WITH DEMOLITION. ENGINEER'S DRAWINGS INDICATE LIMITS OF DEMOLITION ONLY AND DO NOT PRESCRIBE HOW DEMOLITION IS TO BE PERFORMED.
3. VERIFY FIELD CONDITIONS PRIOR TO STARTING WORK. PROVIDE ALL NECESSARY BRACING, SHORING, AND TEMPORARY SUPPORTS TO PREVENT MOVEMENT OR DAMAGE TO ADJACENT OR REMAINING STRUCTURES.
4. IMMEDIATELY CEASE OPERATIONS AND NOTIFY OWNER AND ENGINEER IF MOVEMENT, SETTLEMENT, OR UNSAFE CONDITIONS ARE OBSERVED DO NOT RESUME WORK UNTIL SAFETY HAS BEEN RESTORED.
5. REMOVE ONLY PORTIONS OF CONSTRUCTION INDICATED ON THE DRAWINGS. WHERE LIMITS ARE UNCLEAR, CONFIRM EXTENT OF REMOVAL WITH ENGINEER PRIOR TO PROCEEDING.
6. PERFORM ALL WORK IN ACCORDANCE WITH LOCAL, STATE AND FEDERAL REGULATIONS INCLUDING OSHA REQUIREMENTS. MAINTAIN SAFE ACCESS AND CONTROL DUST, DEBRIS, AND NOISE AT ALL TIMES.
7. REPAIR OR REPLACE, AT NO COST TO THE OWNER, ANY DAMAGE RESULTING FROM DEMOLITION OPERATIONS OR DEMOLITION PERFORMED BEYOND THE LIMITS INDICATED.
8. ENGINEER'S RESPONSIBILITY IS LIMITED TO DEFINING THE EXTENT OF DEMOLITION. CONTRACTOR SHALL BE FULLY RESPONSIBLE FOR MEANS, METHODS SAFETY AND PRTECTION OF EXISTING STRUCTURES AND FACILITIES.

STRUCTURAL ABBREVIATIONS

AB	ANCHOR BOLT	FLR	FLOOR	PERP	PERPENDICULAR
ALT	ALTERNATIVE	FOM	FACE OF MASONRY	PL	PLATE
ALUM	ALUMINUM	FS	FAR SIDE	PLUMB	PLUMBING
ARCH	ARCHITECTURAL	FT	FOOT	PNL	PANEL
B	BOTTOM	FTG	FOOTING	POLY	POLYETHYLENE
B/	BOTTOM OF	FUT	FUTURE	PREFAB	PREFABRICATED
BLDG	BUILDING	GA	GAGE	PSF	POUNS PER SQUARE FOOT
BM	BEAM	GALV	GALVANIZED	PSI	POUNS PER SQUARE INCH
B/BOT	BOTTOM	GYP	GYPSUM	QTY	QUANTITY
BRG	BEARING	HORIZ	HORIZONTAL	R	RADIUS
C	CHANNEL SHAPE	HP	HIGH POINT	RE	CALLED RIGHT END
C TO C	CENTER TO CENTER	HSS	HOLLOW STRUCTURAL SECTION	RE:	REFERENCE
CANT	CANTILIVER	HT	HEIGHT	REINF	REINFORCE (MENT) (D)
CJ	CONTROL JOINT	IN	INCH	REQ	REQUIRE
CONST JT	CONSTRUCTION JOINT	INFO	INFORMATION	REQD	REQUIRED
CL	CENTER LINE	INT	INTERIOR	REV	REVISION
CLR	CLEAR	INSUL	INSULATION	SCHED	SCHEDULE
CMU	CONCRETE MASONRY UNIT	JB	JOIST BOTTOM / SEAT ELEVATION	SF	SQUARE FOOT
COL	COLUMN	JST	JOIST	SHT	SHEET
CONC	CONCRETE	JT	JOINT	SI	SQUARE INCH
CONN	CONNECTION	K	KIPS	SIM	SIMILAR
CONST	CONSTRUCTION	KO	KNOCK OUT	SL	SLOPE
CONT	CONTINUOUS	KSF	KIPS PER SQUARE FOOT	SOG	SLAB ON GRADE
COORD	COORDINATE	KSI	KIPS PER SQUARE INCH	SPA	SPACES (D)
CTR	CENTER	L	ANGLE	SPEC	SPECIFICATION
CTRD	CENTERED	LB	POUND	STD	STANDARD
D	DEPTH	LE	LEFT END	STIFF	STIFFENER
DBA	DEFORMED ANCHOR BAR	LG	LONG	STL	STEEL
DBL	DOUBLE	LLH	LONG LEG HORIZONTAL	SW	SHORTWAY
DBL TEE	PRECAST DOUBLE TEE	LLV	LONG LEG VERTICAL	SYM	SYMETRICAL
DIA	DIAMETER	LSH	LONG SIDE HORIZONTAL	T	TOP
DIAG	DIAGONAL	LSV	LONG SIDE VERTICAL	T/	TOP OF
DIM	DIMENSION	LP	LOW POINT	T&B	TOP AND BOTTOM
DN	DOWN	LW	LONG WAY	THK	THICK
DTL	DETAIL	M	MIDDLE	TOF	TOP OF FOOTING
DWG	DRAWING	MANUF/MFR	MANUFACTER	TOJ	TOP OF JOIST
DWL	DOWEL	MATL	MATERIAL	TOS	TOP OF STEEL
EA	EACH	MAX	MAXIMUM	TRANSV	TRANSVERSE
EE	EACH END	MECH	MECHANICAL	TYP.	TYPICAL
EF	EACH FACE	MEP	MECHANICAL/ELECTRICAL/ PLUMBING	UON	UNLESS OTHERWISE NOTED
EJ	EXPANSION JOINT	MEZZ	MEZZANINE	VERT	VERTICAL
EL/ELEV	ELEVATION	MIN	MINIMUM	WF	WIDE FLANGE SHAPE
EOR	ENGINEER OF RECORD	MISC	MISCELLANEOUS	W/	WITH
EOS	EDGE OF SLAB	MO	MASONRY OPENING	W/O	WITHOUT
EQ	EQUAL	MSL	MEAN SEA LEVEL	WP	WORK POINT
EQUIP	EQUIPMENT	MTL	METAL	WS	WATERSTOP
ES	EACH SIDE	NO	NUMBER	WT	T SHAPE
EW	EACH WAY	NS	NEAR SIDE	WWF	WELDED WIRE FABRIC
EXIST	EXISTING	N.T.S.	NOT TO SCALE	&	AND
EXP	EXPANSION	OC	ON CENTER	@	AT
EXT	EXTERIOR	OC EW	ON CENTER EACH WAY	Ø	DIAMETER
FD	FLOOR DRAIN	OPNG	OPENING	#	NUMBER
FDN	FOUNDATION	OPP	OPPOSITE	±	PLUS/MINUS
FL	FULL LENGTH	PEMB	PREENGINEERED METAL BUILDING		
FF	FINISH FLR				

NO.	DATE	REVISION	APP.

IDS Engineering Group
13430 NW. Freeway, Suite 700
Houston, Tx. 77040
713.462.3178
TxEng Firm 2726 / TxSurv Firm 10110700

CONCEPT ENGINEERS
TX. FIRM REGISTRATION # F-04417
Structures for the whole community

PRELIMINARY
NOT FOR CONSTRUCTION,
BIDDING, OR PERMIT PURPOSES.
FOR REVIEW ONLY.
DAVID MOORE
TEXAS LICENSE NO. 139405
Date: 05/08/26

CITY OF HOUSTON
DEPARTMENT OF PUBLIC WORKS AND ENGINEERING

LIFT STATION RENEWAL AND REPLACEMENT FY 2023
SCOTT ST #3 LIFT STATION
GENERAL NOTES
(SHEET 2 OF 3)

WBS NUMBER	FOR CITY OF HOUSTON USE ONLY
R-000267-0179-3	
DRAWING SCALE	
AS NOTED	
CITY OF HOUSTONPM	
NAWARAJ PANTA, P.E.	
DWG. NO. SCT-S-03	SHEET NO. 132 OF 361

IDS JOB No. 0057-085-00

FILE PATH: G:\COMMERCIAL PROJECTS\24137 - Lift Station Rehab & Construction\STRUCTURAL_JV_DWGS\XREF\24137-TBlock.dwg

SPECIAL INSPECTIONS NOTES

THE FOLLOWING STATEMENT AND SCHEDULES OF INSPECTIONS OUTLINE THE SPECIAL INSPECTIONS AND TESTS NECESSARY FOR THIS PROJECT.
THE GENERAL CONTRACTOR SHALL HIRE AN "APPROVED AGENCY" PER THE INTERNATIONAL BUILDING CODE (IBC) SECTION 1703 TO PROVIDE SPECIAL INSPECTIONS FOR THIS PROJECT. THE QUALIFIED SPECIAL INSPECTOR SHALL REFERENCE THESE PLANS AND CHAPTER 17 OF THE IBC FOR ALL SPECIAL INSPECTION REQUIREMENTS. SPECIAL INSPECTION REPORTS SHOULD BE SUBMITTED WEEKLY.
THE APPROVED AGENCY SHALL SUBMIT COPIES OF ALL INSPECTION REPORTS TO THE ARCHITECT/ENGINEER AND THE AUTHORITY HAVING JURISDICTION (BUILDING OFFICIAL) FOR REVIEW. THE SPECIAL INSPECTION SHALL BRING DISCREPANCIES TO THE IMMEDIATE ATTENTION OF THE GENERAL CONTRACTOR FOR CORRECTION. IF THE DISCREPANCIES ARE NOT CORRECTED, THE DISCREPANCIES SHALL BE BROUGHT TO THE ATTENTION OF THE BUILDING OFFICIAL AND TO THE ARCHITECT PRIOR TO THE COMPLETION OF THAT PHASE OF THE WORK. IN ADDITION TO SPECIAL INSPECTION REPORTS AND TESTS, SUBMIT REPORTS AND CERTIFICATES NOTED IN IBC 1704.5 TO THE AUTHORITY HAVING JURISDICTION. FINAL REPORTS DOCUMENTING SPECIAL INSPECTIONS AND TESTS MUST BE SUBMITTED TO THE BUILDING OFFICIAL PER IBC 1704.2.4.

STATEMENT OF SPECIAL INSPECTIONS:

THIS SPECIAL INSPECTIONS STATEMENT HAS BEEN PREPARED WITH THE UNDERSTANDING THAT SEOR AND THE BUILDING OFFICIAL REPRESENTATIVE WILL:

- REVIEW AND ACCEPT THE QUALIFICATIONS OF THE SPECIAL INSPECTORS
- OBSERVE THE SPECIAL INSPECTION OPERATIONS TAKING PLACE AT THE PROJECT SITE TO ENSURE THAT THE SPECIAL INSPECTORS ARE COMPETENT AND CARRYING OUT THEIR ASSIGNED RESPONSIBILITIES AS SPECIFIED IN THIS STATEMENT.
- REVIEW ALL THE SPECIAL INSPECTION REPORTS THAT THE SPECIAL INSPECTOR HAS PROVIDED THEM WITH.
- CONDUCT INSPECTIONS AS SPECIFIED BY IBC SECTION 110.3

THE FOLLOWING SPECIAL INSPECTIONS APPLY TO THIS PROJECT:

- SPECIAL INSPECTIONS FOR STANDARD BUILDINGS PER IBC 1705.1 [REQUIRED]
- STORM SHELTER INSPECTIONS SHALL MATCH THE REQUIREMENTS OF THE HOST BUILDING PER SECTION 106 OF 2020 ICC-500. [REQUIRED]

SPECIAL INSPECTION OF SHOP-FABRICATED GRAVITY LOAD-BEARING MEMBERS AND ASSEMBLIES:

SPECIAL INSPECTION OF SHOP-FABRICATED GRAVITY LOAD BEARING MEMBERS & ASSEMBLIES SHALL BE PERFORMED BY THE SPECIAL INSPECTOR AS STATED IN SECTION 1704.2.5, WHICH INCLUDES THE FOLLOWING:

- BEFORE FABRICATION BEGINS, SPECIAL INSPECTORS REPRESENTING THE GENERAL CONTRACTOR NEED TO VISIT THE FABRICATOR'S SHOP TO VERIFY THAT THE FABRICATOR HAS DETAILED FABRICATION AND QUALITY CONTROL (QC) PROCEDURES IN PLACE. THESE PROCEDURES SHOULD COVER INSPECTION, WORKMANSHIP CONTROL, MATERIAL CONTROL, AND THE FABRICATOR'S ABILITY TO ADHERE TO THE APPROVED CONSTRUCTION DOCUMENTS AND REFERENCED STANDARDS.
- THE FABRICATOR MUST HAVE DETAILED PROCEDURES FOR MATERIAL CONTROL AVAILABLE FOR THE INSPECTOR TO REVIEW. THESE PROCEDURES SHOULD SHOW THAT THE FABRICATOR CAN MAINTAIN ACCURATE RECORDS AND PROCESSES SO THAT AT ANY POINT DURING FABRICATIATION, THE MATERIAL SPECIFICATION, GRADE, AND RELEVANT TEST REPORTS FOR PRIMARY LOAD-CARRYING MEMBERS CAN BE IDENTIFIED.

SPECIAL INSPECTION OF STRUCTURAL STEEL:

AS PER IBC SECTION 1705.2.1, A QUALIFIED SPECIAL INSPECTOR OF AN "APPROVED AGENCY" PROVIDING QUALITY ASSURANCE (QA) SPECIAL INSPECTIONS FOR THE PROJECT SHALL REVIEW AND CONFIRM THE FABRICATOR AND ERECTOR'S QUALITY CONTROL (QC) PROCEDURES FOR COMPLETENESS AND ADEQUACY RELATIVE TO AISC 360-16 CHAPTER N, AISC 303-16 CODE OF STANDARD AND PRACTICE, AWS D1.1-2015 STRUCTURAL WELDING CODE, AND 2018 IBC CODE REQUIREMENTS FOR THE FABRICATOR'S SCOPE OF WORK.

- QA AGENCY PROVIDING SPECIAL INSPECTIONS MUST EMPLOY PERSONNEL WHO MEET THE MINIMUM QUALIFICATION REQUIREMENTS FOR INSPECTION AND NONDESTRUCTIVE TESTING (NDT) AS PER AISC 360 SECTION N4.
- ENSURE THE FABRICATOR AND ERECTOR QUALITY CONTROL (QC) PROGRAM COMPLIES WITH AISC 360 SECTION N2.
- QC AND QA PERSONNEL SHALL INSPECT WELDS AND BOLTS PER THE SCHEDULE OF SPECIAL INSPECTIONS BELOW.
- ALL AWS D1.1 STRUCTURAL WELDING CODE PROVISIONS FOR STATICALLY LOADED STRUCTURES SHALL APPLY.
- NONDESTRUCTIVE TESTING (NDT) OF WELDS:
  - NON-DESTRUCTIVE TESTING (NDT) OF WELDED JOINTS PER AISC 360 N5.5
  - RISK CATEGORY FOR DETERMINATION OF THE EXTENT OF NDT PER AISC 360 N5.5B IS NOTED IN THE DESIGN CRITERIA AND LOADS SECTION OF THESE GENERAL REQUIREMENTS. NDT MUST BE DOCUMENTED, AND REPORTS SHOULD SPECIFY THE TESTED WELD BY PIECE MARK AND LOCATION.
- ADDITIONAL INSPECTION TASKS PER AISC 360 SECTION N5.8.

POST-INSTALLED ANCHORS TO CONCRETE AND MASONRY: SHALL COMPLY WITH IBC SECTION 1703. INSPECTIONS MUST COMPLY WITH THE REQUIREMENTS IN THE APPROVED ICC EVALUATION REPORT AND THE DESIGN REQUIREMENTS SPECIFIED ON THE DRAWINGS. REFER TO THE POST INSTALLED ANCHORS SECTION OF THESE NOTES FOR ANCHORS THAT ARE THE BASIS OF THE DESIGN. THE SPECIAL INSPECTOR MUST ENSURE THAT THE ANCHORS ARE IN ACCORDANCE WITH THE POST-INSTALLED ANCHORS SECTION OF THESE NOTES OR AS SPECIFICALLY INDICATED ON THE DRAWINGS. SUBSTITUTIONS MUST BE APPROVED BY THE SER AND REQUIRE SUPPORTING CALCULATIONS AND THE CURRENT 2018 IBC-RECOGNIZED ICC EVALUATION SERVICES (ES) REPORT. SPECIAL INSPECTORS MUST DOCUMENT COMPLIANCE WITH ALL ELEMENTS REQUIRED IN THE RELEVANT ICC EVALUATION SERVICES (ES) REPORT IN THEIR SPECIAL INSPECTION REPORT.

PREFABRICATED CONSTRUCTION: ALL PREFABRICATED CONSTRUCTION SHALL CONFORM TO IBC SECTION 1703.

PER THE ICC-500, SECTION 111.1 STRUCTURAL OBSERVATION :

DURING CONSTRUCTION OF THE STORM SHELTER, THE BUILDING OWNER SHALL EMPLOY A REGISTERED DESIGN PROFESSIONAL TO CONDUCT VISUAL OBSERVATIONS OF THE CONSTRUCTION OF THE STRUCTURAL SYSTEM FOR GENERAL CONFORMANCE TO THE APPROVED CONSTRUCTION DOCUMENTS AT SIGNIFICANT CONSTRUCTION STAGES AND AT COMPLETION OF THE CONSTRUTION OF THE STRUCTURAL SYSTEM.

STRUCTURAL OBSERVATION SHALL NOT OBVIATE THE NEED FOR OTHER INSPECTIONS OR TESTING REQUIRED BY THIS STANDARD OR APPLICABLE CODE.

DEFICIENCIES SHALL BE REPORTED IN WRITING TO THE ATHORITY HAVING JURISDICTION AND OWNER OR THE OWNER'S AUTHORIZED AGENT. AT THE CONCLUSION OF THE WORK, THE REGISTERED DESIGN PROFESSIONAL WHO MADE THE STRUCTURAL OBSERVATIONS SHALL SUBMIT TO THE AUTHORITY HAVING JURISDICTION A WRITTEN STATEMENT THAT THE SITE VISITS HAVE BEEN MADE AND SHALL IDENTIFY ANY REPORTED DEFICIENCIES THAT, TO THE BEST OF THE STRUCTURAL OBSERVER'S KNOWLEDGE, HAVE NOT BEEN RESOLVED.

SECTION 110
SPECIAL INSPECTIONS

110.1 SPECIAL INSPECTIONS

SPECIAL INSPECTION SHALL BE PROVIDED IN ACCORDANCE SITH THIS SECTION, IN ADDITION TO THOSE REQUIRED BY THE *AUTHORITY HAVING JURISDICTION* IN ACCORDANCE WITH THE *APPLICABLE CODE*. ONE STATEMENT OF *SPECIAL INSPECTIONS* SHALL BE PERMITTED TO APPLY TO BOTH *HOST BUILDING* AND *STORM SHELTER* CONSTRUCTION.

EXCEPTION: PREFABRICATED OR PANELIZED *STORM SHELTER* COMPONENTS THAT HAVE BEEN INSPECTED AND *LABELED* BY AN *APPROVED AGENCY* MEETING THE REQUIREMENTS OF THE *APLICABLE CODE*.

110.1.2 SPECIAL CASES

SPECIAL INSPECTIONS SHALL BE PROVIDED FOR PROPOSED WORK COMPRISED OF THE FOLLOWING:

1. CONSTRUCTION MATERIALS AND SYSTEMS THAT ARE ALTERNATIVES TO TRADITIONAL MATERIALS AND SYSTEMS PRESCRIBED BY THE *APPLICABLE CODE*.
2. UNUSUAL DESIGN AND CONSTRUCTION APPLICATIONS.
3. ANCHORS POS-INSTALLED IN HARDENED CONCRETE AND MASONRY, WHERE USED FOR ANCHORAGE OF *STORM SHELTER* COMPONENTS FORMING A PART OF THE *STORM SHELTER* ENCLOSURE OR FOR ANCHORAGE OF THE *STORM SHELTER* STRUCTURE TO FOUNDATIONS SHALL BE IN ACCORDANCE WITH SECTION 110.1.2.1.

110.1.2.1 SPECIAL INSPECTIONS TO VERIFY ANCHOR INSTALLATION

A *SPECIAL INSPECTION* SHALL BE PROVIDED TO VERIFY THE POS-INSTALLED ANCHOR INSTALLATION AND CAPACITY IN ACCORDANCE WITH SECTION 106.2.1. FOR POST-INSTALLED ANCHORAGE TO FOUNDATIONS, *SPECIAL INSPECTION* SHALL BE PROVIDED TO VERIFY FOUNDATION ADEQUACY IN ACCORDANCE WITH SECTIONS 106.2.1 AND 307.

TABLE 1705.3
REQUIRED SPECIAL INSPECTIONS AND TESTS OF CONCRETE CONSTRUCTION

TYPE	CONTINUOUS SPECIAL INSPECTION	PERIODIC SPECIAL INSPECTION	REFERENCED STANDARD[a]	IBC REFERENCE
1. INSPECT REINFORCEMENT, INCLUDING RESTRESSING TENDONS, AND VERIFY PLACEMENT.	-	X	ACI 318: CH. 20, 25.2, 25.3, 26.6.1-26.6.3	-
2. REINFORCING BAR WELDING:				
a. VERIFY WELDABILITY OF REINFORCING BARS OTHER THAN ASTM A706;			AWS D1.4	-
b. INSPECT SINGLE-PASS FILLET WELDS, MAXIMUM 5/16"; AND	-	X	ACI 318: 26.6.4	
c. INSPECT ALL OTHER WELDS.	X	X		
3. INSPECT ANCHORS CAST IN CONCRETE.	-	X	ACI 318: 17.8.2	-
4. INSPECT ANCHORS POST-INSTALLED IN HARDENED CONCRETE MEMBERS.[B]				
a. ADHESIVE ANCHORS INSTALLED IN HORIZONTALLY OR UPWARDLY INCLINED ORIENTATIONS TO RESIST SUSTAINED TENSION LOADS.	X	X	ACI 318: 17.8.2.4	-
b. MECHANICAL ANCHORS AND ADHESIVE ANCHORS NOT DEFINED IN 4.A.			ACI 318: 17.8.2	
5. VERIFY USE OF REQUIRED DESIGN MIX.	-	X	ACI 318: CH. 19, 26.4.3, 26.4.4	-
6. PRIOR TO CONCRETE PLACEMENT, FABRICATE SPECIMENS FOR STRENGTH TESTS, PERFORM SLUMP AND AIR CONTENT TESTS, AND DETERMINE THE TEMPERATURE OF THE CONCRETE.	X		ASTM C31 ASTM C172 ACI 318: 26.5, 26.12	-
7. INSPECT CONCRETE AND SHOTCRETE PLACEMENT FOR PROPER APPLICATION TECHNIQUES.	X		ACI 318: 26.5	-
8. VERIFY MAINTENANCE OF SPECIFIED CURING TEMPERATURE AND TECHNIQUES.	-	X	ACI 318: 26.10	-
9. INSPECT PRESTRESSED CONCRETE FOR: A. APPLICATION OF PRESTRESSING FORCES; AND B. GROUTING OF BONDED PRESTRESSING TENDONS.	X X		ACI 318: CH. 20, 25.2, 25.3, 26.6.1-26.6.3	-
10. INSPECT ERECTION OF PRECAST CONCRETE MEMBERS.	-	X	ACI 318: 26.9	-
11. FOR PRECAST CONCRETE DIAPHRAGM CONNECTIONS OR REINFORCEMENT AT JOINTS CLASSIFIED AS MODERATE OR HIGH DEFORMABILITY ELEMENTS (MDE OR HDE) IN STRUCTURES ASSIGNED TO SEISMIC DESIGN CATEGORY C, D, E OR F, INSPECT SUCH CONNECTIONS AND REINFORCEMENT IN THE FIELD FOR:			ACI 318: 26.13.1.3	-
a. INSTALLATION OF THE EMBEDDED PARTS	X			
b. COMPLETION OF THE CONTINUITY OF REINFORCEMENT ACROSS JOINTS.	X		ACI 550.5	
c. COMPLETION OF CONNECTIONS IN THE FIELD.	X			
12. INSPECT INSTALLATION TOLERANCES OF PRECAST CONCRETE DIAPHRAGM CONNECTIONS FOR COMPLIANCE WITH ACI 550.5.	-	X	ACI 318: 26.13.1.3	-
13. VERIFY IN-SITU CONCRETE STRENGTH, PRIOR TO STRESSING OF TENDONS IN POST-TENSIONED CONCRETE AND PRIOR TO REMOVAL OF SHORES AND FORMS FROM BEAMS AND STRUCTURAL SLABS.	-	X	ACI 318: 26.11.2	-
14. INSPECT FORMWORK FOR SHAPE, LOCATION AND DIMENSIONS OF THE CONCRETE MEMBER BEING FORMED.	-	X	ACI 318: 26.11.1.2(b)	-

SCHEDULES OF SPECIAL INSPECTIONS:

TABLE 1705.6
REQUIRED SPECIAL INSPECTIONS AND TESTS OF SOILS

TYPE	CONTINUOUS SPECIAL INSPECTION	PERIODIC SPECIAL IN- SPECTION
1. VERIFY MATERIALS BELOW SHALLOW FOUNDATIONS ARE ADEQUATE TO ACHIEVE THE DESIGN BEARING CAPACITY.	-	X
2. VERIFY EXCAVATIONS ARE EXTENDED TO PROPER DEPTH AND HAVE REACHED PROPER MATERIAL.	-	X
3. PERFORM CLASSIFICATION AND TESTING OF COMPACTED FILL MATERIALS.	-	X
4. VERIFY USE OF PROPER MATERIALS, DENSITIES AND LIFT THICKNESSES DURING PLACEMENT AND COMPACTION OF COMPACTED FILL.	X	-
5. PRIOR TO PLACEMENT OF COMPACTED FILL, INSPECT SUBGRADE AND VERIFY THAT SITE HAS BEEN PREPARED PROPERLY.	-	X

TABLE 1705.8
REQUIRED SPECIAL INSPECTIONS AND TESTS OF CAST-IN-PLACE DEEP FOUNDATION ELEMENTS

TYPE	CONTINUOUS SPECIAL INSPECTION	PERIODIC SPECIAL INSPECTION
1. INSPECT DRILLING OPERATIONS AND MAINTAIN COMPLETE AND ACCURATE RECORDS FOR EACH ELEMENT	X	-
2. DETERMINE CAPACITIES OF TEST ELEMENTS AND CONDUCT ADDITIONAL LOAD TESTS, AS REQUIRED.	X	-
3. INSPECT DRIVING OPERATIONS AND MAINTAIN COMPLETE AND ACCURATE RECORDS FOR EACH ELEMENT	X	-

FOR DRILLED UNDERREAMED PIERS, THE SPECIAL INSPECTOR SHALL VERIFY SHAFT DIAMETER, BELL DIAMETER, PIER DEPTH, FOUNDING MATERIAL, AND CONCRETE PLACEMENT IN ACCORDANCE WITH IBC TABLE 1705.8.

MINIMUM REQUIREMENTS FOR INSPECTIONS OF STRUCTURAL STEEL CONSTRUCTION

INSPECTION TASKS	QC	QA	REFERENCED STANDARD
INSPECTION TASKS PRIOR TO WELDING			
1. Welder qualification records and continuity records	P	O	AISC 360 TABLE N5.4-1
2. Welding procedure specifications (WPSs) available	P	O	AISC 360 TABLE N5.4-1
3. Manufacturing certifications for welding consumables available	P	O	AISC 360 TABLE N5.4-1
4. Material identification (type/grade)	P	O	AISC 360 TABLE N5.4-1
5. Welder Identification system	P	O	AISC 360 TABLE N5.4-1
8. Configuration and finish of access holes	P	O	AISC 360 TABLE N5.4-1
9. Fit-up of fillet welds • Dimensions (alignment gaps at root) • Cleanliness (condition of steel surfaces) • Tacking (tack weld quality and location)	P	O	AISC 360 TABLE N5.4-1
10. Check welding equipment	P	O	AISC 360 TABLE N5.4-1
INSPECTION TASKS DURING WELDING			
1. Use of qualified welders	P	O	AISC 360 TABLE N5.4-2
2. Control and handling of welding consumables • Packaging • Exposure Control	P	O	AISC 360 TABLE N5.4-2
3. No welding over cracked track welds	P	O	AISC 360 TABLE N5.4-2
4. Environmental conditions • Wind speed within limits • Precipitation and temperature	P	O	AISC 360 TABLE N5.4-2
5. WPS followed • Settings on welding equipment • Travel speed • Selected welding materials • Shielding gas type/flowrate • Preheat applied • Interpass temperature maintained (min/max) • Proper position (F,V,H,OH)	P	O	AISC 360 TABLE N5.4-2
6. Welding techniques • Interpass and final cleaning • Each pass within profile limitations • Each pass meets quality requirements	P	O	AISC 360 TABLE N5.4-2
INSPECTION TASKS AFTER WELDING			
1. Welds cleaned	P	O	AISC 360 TABLE N5.4-3
2. Size, length, and locations of welds	P	O	AISC 360 TABLE N5.4-3
3. Welds meet visual acceptance criteria • Crack prohibition • Weld/base-metal fusion • Crater cross section • Weld profiles • Weld size • Undercut • Porosity	P	O	AISC 360 TABLE N5.4-3
4. Arc strikes	P	O	AISC 360 TABLE N5.4-3
5. k-area	P	O	AISC 360 TABLE N5.4-3
6. Weld access holes in roled heavy shapes and built-up heavy shapes	P	O	AISC 360 TABLE N5.4-3
7. Backing removed and weld tabs removed (if required)	P	O	AISC 360 TABLE N5.4-3
8. Repair activities	P	O	AISC 360 TABLE N5.4-3
9. Document acceptance or rejection of welded joint or member	P	O	AISC 360 TABLE N5.4-3
10. No prohibited welds have been added without the approval of the EOR	P	O	AISC 360 TABLE N5.4-3
INSPECTION TASKS PRIOR TO BOLTING			
1.Manufacturer's certifications available for fastener materials	P	O	AISC 360 TABLE N5.6-1
2.Fasteners marked in accordance with ASTM requirements	P	O	AISC 360 TABLE N5.6-1
3.Correct fasteners selected for the joint detail (grade, type, bolt length if threads are to be excluded from shear plane)	P	O	AISC 360 TABLE N5.6-1
4.Correct bolting procedures selected for joint detail	P	O	AISC 360 TABLE N5.6-1
5.Connecting elements, including the appropriate faying surface condition and hole preparation, if specified, meet applicable requirements.	P	O	AISC 360 TABLE N5.6-1
6.Pre-installation verification testing by installation personnel observed and documented for fastener assemblies and methods used	P	O	AISC 360 TABLE N5.6-1
7.Proper storage provided for bolts, nuts, washers and other fasteners components	P	O	AISC 360 TABLE N5.6-1
INSPECTION TASKS DURING BOLTING			
1. Fastener assemblies, of suitable condition, placed in all holes and washers are positioned as required	P	O	AISC 360 TABLE N5.6-2
2. Joint brought to the snug-tight condition prior to the pre-tensioning operation	P	O	AISC 360 TABLE N5.6-2
3. Fastener component not turned by the wrench prevented from rotating	P	O	AISC 360 TABLE N5.6-2
4. Fasteners are pre-tensioned in accordance with the RCSC Specification, progressing systematically from the most rigid point toward the free edges.	P	O	AISC 360 TABLE N5.6-2
INSPECTION TASKS AFTER BOLTING	P	O	AISC 360 TABLE N5.6-2
1. Document acceptance or rejection of bolted connections	P	O	AISC 360 TABLE N5.6-2

O - Observe these items on a random basis. Operations need not be delayed pending these inspections
P - Perform these tasks for each welded joint or member, each bolted connection, or each steel element

NO.	DATE	REVISION	APP.

IDS Engineering Group
13430 NW. Freeway, Suite 700
Houston, Tx. 77040
713.462.3178
TxEng Firm 2726 / TxSurv Firm 10110700

CONCEPT ENGINEERS
TX. FIRM REGISTRATION # F-04417
Structures for the whole community

PRELIMINARY
NOT FOR CONSTRUCTION, BIDDING, OR PERMIT PURPOSES.
FOR REVIEW ONLY.
DAVID MOORE
TEXAS LICENSE NO. 139405
Date: 05/08/26

CITY OF HOUSTON
DEPARTMENT OF PUBLIC WORKS AND ENGINEERING

LIFT STATION RENEWAL AND REPLACEMENT FY 2023
SCOTT ST #3 LIFT STATION
GENERAL NOTES
(SHEET 3 OF 3)

WBS NUMBER	FOR CITY OF HOUSTON USE ONLY
R-000267-0179-3	
DRAWING SCALE	
AS NOTED	
CITY OF HOUSTONPM	
NAWARAJ PANTA, P.E.	
DWG. NO. SCT-S-04	SHEET NO. 133 OF 361

IDS JOB No. 0057-085-00

PLOTTED: 5/21/2019 1:28 PM
FILE PATH: G:\COMMERCIAL PROJECTS\24137 - Lift Station Rehab & Construction\STRUCTURAL\xV-DWGS\XREF\24137-TBlock.dwg

PLOTTED: 5/21/2019 1:28 PM

PORTION OF EXISTING SLAB-ON-GRADE TO BE REMOVED. REPLACE WITH NEW STRUCTURAL SLAB AS SHOWN ON SHEET SCT-S-07 SEE DETAIL SCT-S-09 FOR CONNECTION TO EXISTING SLAB, TYPICAL. CONTRACTOR SHALL VERIFY EXISTING CONDITIONS, INCLUDING SLAB THICKNESS, REINFORCING, AND ELEVATIONS, PRIOR TO SAWCUTTING OR REMOVAL. CONTRACTOR IS RESPONSIBLE FOR MAINTAINING STABILITY OF ADJACENT SLAB AND COORDINATING FINAL ELEVATIONS, JOINT ALIGNMENT, AND SAWCUT LOCATIONS IN THE FIELD.

1
SCT-S-07

PROPOSED ODOR CONTROL RE: CIVIL

EXTENT OF EXISTING SLAB REMOVAL SHALL BE A MINIMUM OF 3'-0" BEYOND THE EDGE OF THE PROPOSED ODOR CONTROL BUILDING AND CONCRETE STAIRS, TYPICAL. CONTRACTOR SHALL COORDINATE EXACT REMOVAL LIMITS AND BUILDING LOCATIONS WITH CIVIL DRAWINGS AND VERIFY ALL DIMENSIONS AND LAYOUT IN THE FIELD PRIOR TO DEMOLITION. STRUCTURAL DRAWINGS INDICATE GENERAL INTENT ONLY.

1
SCT-S-06

EXISTING LIFT STATION RE: CIVIL

1
SCT-S-08

EXTENT OF EXISTING SLAB REMOVAL SHALL BE A MINIMUM OF 3'-0" BEYOND THE EDGE OF THE PROPOSED ELECTRICAL CONTROL BUILDING AND CONCRETE STAIRS, TYPICAL. CONTRACTOR SHALL COORDINATE EXACT REMOVAL LIMITS AND BUILDING LOCATIONS WITH CIVIL DRAWINGS AND VERIFY ALL DIMENSIONS AND LAYOUT IN THE FIELD PRIOR TO DEMOLITION. STRUCTURAL DRAWINGS INDICATE GENERAL INTENT ONLY.

PROPOSED ELECTRICAL CONTROL BUILDING RE: CIVIL

PORTION OF EXISTING SLAB-ON-GRADE TO BE REMOVED. REPLACE WITH NEW STRUCTURAL SLAB AS SHOWN ON SHEET SCT-S-08 SEE DETAIL SCT-S-09 FOR CONNECTION TO EXISTING SLAB, TYPICAL. CONTRACTOR SHALL VERIFY EXISTING CONDITIONS, INCLUDING SLAB THICKNESS, REINFORCING, AND ELEVATIONS, PRIOR TO SAWCUTTING OR REMOVAL. CONTRACTOR IS RESPONSIBLE FOR MAINTAINING STABILITY OF ADJACENT SLAB AND COORDINATING FINAL ELEVATIONS, JOINT ALIGNMENT, AND SAWCUT LOCATIONS IN THE FIELD.

NO.	DATE	REVISION	APP.

IDS Engineering Group
13430 NW. Freeway, Suite 700
Housten, Tx. 77040
713.462.3178
TxEng Firm 2726 / TxSurv Firm 10110700

CONCEPT ENGINEERS
TX. FIRM REGISTRATION # F-04417
Structures for the whole community

PRELIMINARY
NOT FOR CONSTRUCTION, BIDDING, OR PERMIT PURPOSES.
FOR REVIEW ONLY.
DAVID MOORE
TEXAS LICENSE NO. 139405
Date: 05/08/26

CITY OF HOUSTON
DEPARTMENT OF PUBLIC WORKS AND ENGINEERING

LIFT STATION RENEWAL AND REPLACEMENT FY 2023

SCOTT ST #3 LIFT STATION SITE PLAN

WBS NUMBER	FOR CITY OF HOUSTON USE ONLY
R-000267-0179-3	
DRAWING SCALE	
AS NOTED	
CITY OF HOUSTONPM	
NAWARAJ PANTA, P.E.	
SHEET NO. 134 OF 361	

DWG. NO. SCT-S-05

IDS JOB No. 0057-085-00

FILE PATH: G:\COMMERCIAL PROJECTS\24137 - Lift Station Rehab & Construction\STRUCTURAL\JV_DWGS\XREF\24137-TBlock.dwg

PLOTTED: 5/21/2019 1:28 PM

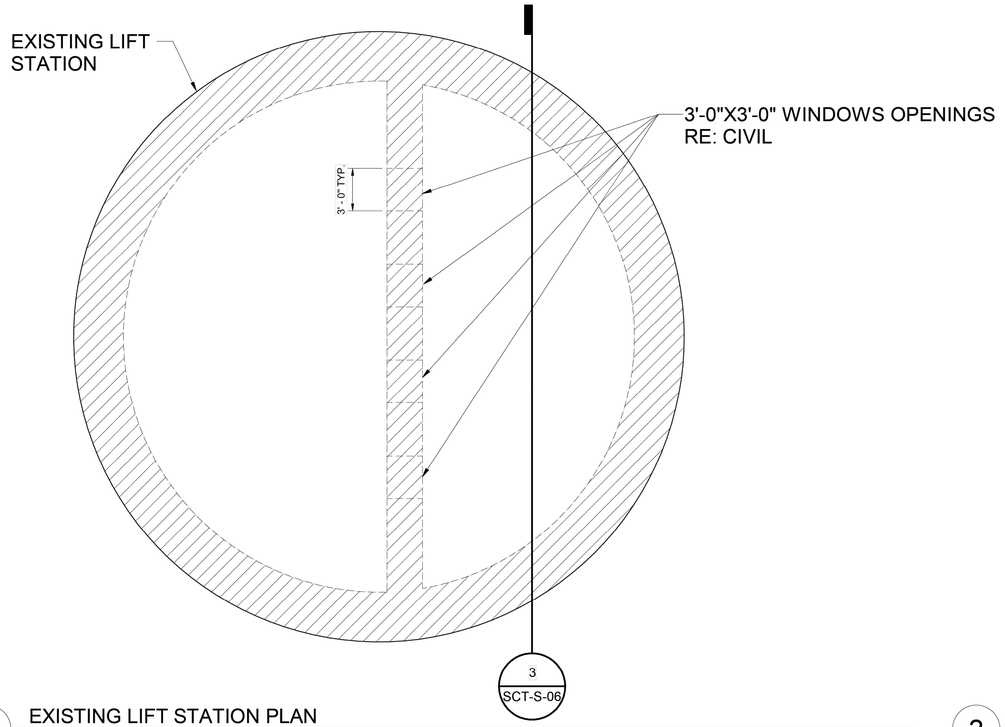

1 EXISTING LIFT STATION PLAN
3/16" = 1'-0"

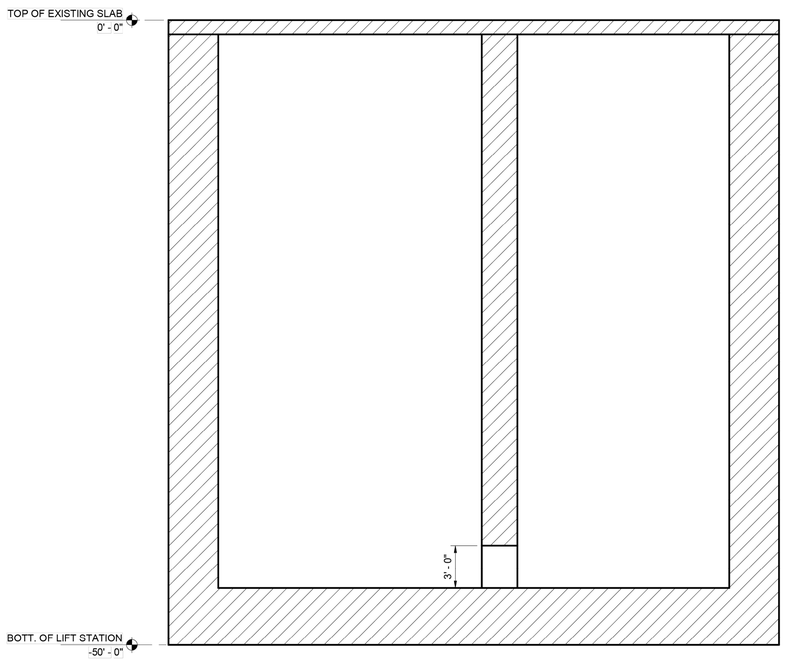

2 EXISTING LIFT STATION SECTION
3/16" = 1'-0"

NOTES:

1. CONTRACTOR SHALL VERIFY EXISTING WALL THICKNESS, REINFORCEMENT, AND ELEVATIONS PRIOR TO CUTTING.
2. SAWCUT FULL DEPTH AROUND PERIMETER OF OPENING; DO NOT USE IMPACT DEMOLITION METHODS.
3. REMOVE CONCRETE WITHIN SAWCUT LIMITS CAREFULLY TO AVOID DAMAGING ADJACENT REINFORCEMENT.
4. EXPOSED REINFORCING BARS AT OPENING EDGES SHALL BE CLEANED, EPOXY COATED, AND BENT BACK OR CUT FLUSH AS DIRECTED BY THE ENGINEER.
5. PROVIDE NEW STAINLESS STEEL OR EPOXY-COATED #5 DOWELS @ 12" O.C. EACH SIDE, 6" EMBED INTO EXISTING WALL AND 6" INTO NEW REINFORCED COLLAR, UNLESS OTHERWISE NOTED.
6. PROVIDE NEW REINFORCED CONCRETE COLLAR AROUND OPENING, 12" MIN. THICKNESS ALL AROUND (TYP.), TIED INTO EXISTING WALL WITH DOWELS.
7. NEW CONCRETE SHALL BE 4000 PSI, SULFATE-RESISTANT, W/ CORROSION INHIBITOR, CURED AND COATED WITH EPOXY PROTECTIVE COATING SUITABLE FOR WASTEWATER IMMERSION.
8. SMOOTH AND ROUND ALL EXPOSED CONCRETE EDGES (1" MIN. CHAMFER OR RADIUS).
9. AFTER ALL OPENINGS ARE COMPLETED, APPLY TWO COATS OF EPOXY COATING (TNEMEC OR EQUAL) TO ALL EXPOSED CONCRETE SURFACES.

NO.	DATE	REVISION	APP.

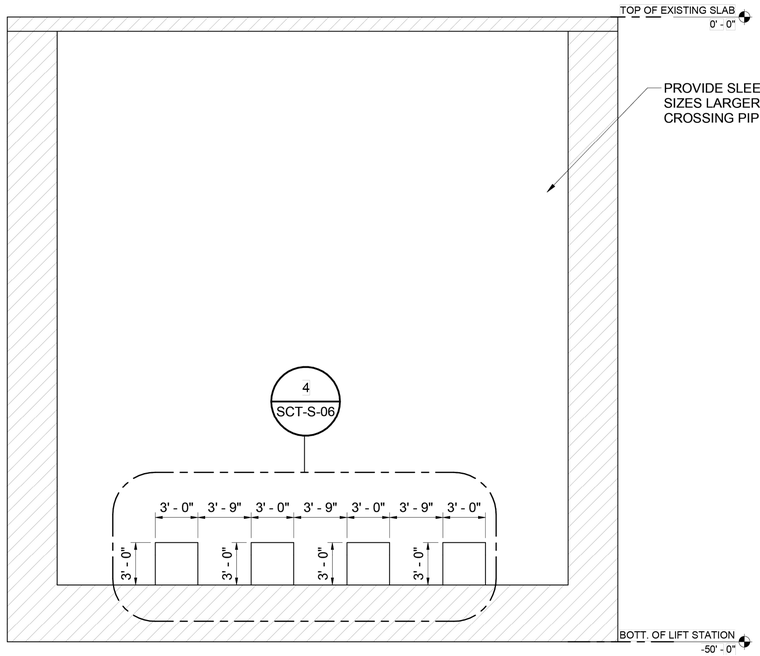

3 EXISTING LIFT STATION WALL ELEVATION
3/16" = 1'-0"

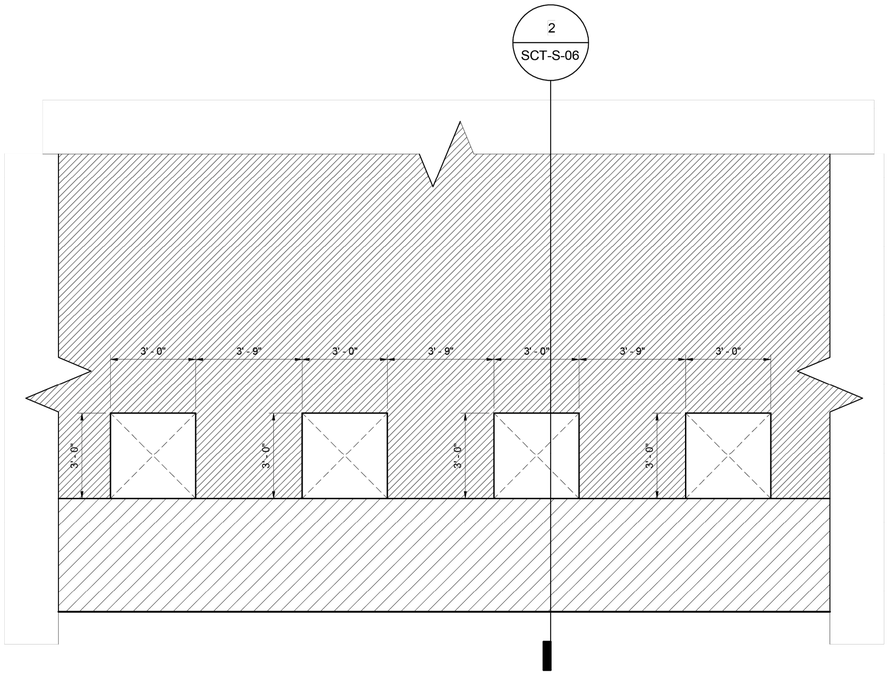

4 EXISTING LIFT STATION WALL ELEVATION (BLOWN UP DETAIL)
3/8" = 1'-0"

IDS Engineering Group
13430 NW. Freeway, Suite 700
Houston, Tx. 77040
713.462.3178
TxEng Firm 2726 / TxSurv Firm 10110700

CONCEPT ENGINEERS
TX. FIRM REGISTRATION # F-04417
Structures for the whole community

PRELIMINARY
NOT FOR CONSTRUCTION,
BIDDING, OR PERMIT PURPOSES.
FOR REVIEW ONLY.
DAVID MOORE
TEXAS LICENSE NO. 139405
Date: 05/08/26

CITY OF HOUSTON
DEPARTMENT OF PUBLIC WORKS AND ENGINEERING

LIFT STATION RENEWAL AND REPLACEMENT FY 2023

SCOTT ST #3 LIFT STATION
EXISTING LIFT STATION

WBS NUMBER	FOR CITY OF HOUSTON USE ONLY
R-000267-0179-3	
DRAWING SCALE	
AS NOTED	
CITY OF HOUSTONPM	
NAWARAJ PANTA, P.E.	
SHEET NO. 135 OF 361	

DWG. NO. SCT-S-06

IDS JOB No. 0057-085-00

FILE PATH: G:\COMMERCIAL PROJECTS\24137 - Lift Station Rehab & Construction\STRUCTURAL\JV_DWGS\XREF\24137-TBlock.dwg

PLOTTED: 5/21/2019 1:28 PM

FILE PATH: G:\COMMERCIAL PROJECTS\24137 - Lift Station Rehab & Construction\STRUCTURAL\V_DWGS\XREF\24137-TBlock.dwg

FOUNDATION NOTES:

1. CENTER ALL DRILLED SHAFTS UNDER CENTERLINE OF STEEL COLUMN. IF NO STEEL COLUMN IS SHOWN, CENTER DRILLED SHAFTS UNDER CENTER OF GRADE BEAM.
2. ALL STEEL TO BE HOT DIPPED GALVANIZED.
3. FINISH FLOOR ELEVATION = 45'-0". FINISH FLOOR ELEVATION OF NEW STRUCTURAL SLAB 4'-0" MAX FROM EXISTING SLAB. RE: CIVIL FOR ACTUAL ELEVATION.
4. "B1" AS SHOWN ON PLAN INDICATES CONCRETE BEAM TYPE B1. THE TOP ELEVATION OF ALL BEAMS IS AT 44'-0" TYP U.N.O. REFER TO SCT-S-10 FOR BEAM SCHEDULE AND DETAILS.
5. " 18"/20'-0" " AS SHOWN ON PLAN INDICATES A DRILLED STRAIGHT SHAFT THAT IS 18" IN DIAMETER AND 20'-0" LONG MEASURED FROM EXISTING GRADE. THE TOP ELEVATION OF ALL STRAIGHT SHAFTS ARE AT 39'-0", TYP, U.N.O. RE: SCT-S-10 FOR STRAIGHT SHAFT SCHEDULE AND DETAILS.
6. REFER TO CIVIL/MEP FOR DIMENSIONS AND LOCATIONS OF ALL SLOPED AND DEPRESSION.
7. (*) INDICATES BEAMS WITH VARYING DEPTHS. RE: SECTION
8. PORTION OF EXISTING SLAB-ON-GRADE TO BE REMOVED AND REPLACED WITH NEW STRUCTURAL SLAB AS SHOWN ON THIS SHEET. SEE DETAIL SCT-S-09 FOR CONNECTION TO EXISTING SLAB, TYPICAL. CONTRACTOR SHALL VERIFY EXISTING CONDITIONS, INCLUDING SLAB THICKNESS, REINFORCING, AND ELEVATIONS, PRIOR TO SAWCUTTING OR REMOVAL. CONTRACTOR IS RESPONSIBLE FOR MAINTAINING STABILITY OF ADJACENT SLAB AND COORDINATING FINAL ELEVATIONS, JOINT ALIGNMENT, AND SAWCUT LOCATIONS IN THE FIELD.
9. EXTENT OF EXISTING SLAB REMOVAL SHALL BE A MINIMUM OF 3'-0" BEYOND THE EDGE OF THE PROPOSED ODOR CONTROL BUILDING AND CONCRETE STAIRS, TYPICAL. CONTRACTOR SHALL COORDINATE EXACT REMOVAL LIMITS AND BUILDING LOCATIONS WITH CIVIL DRAWINGS AND VERIFY ALL DIMENSIONS AND LAYOUT IN THE FIELD PRIOR TO DEMOLITION. STRUCTURAL DRAWINGS INDICATE GENERAL INTENT ONLY.

NO.	DATE	REVISION	APP.

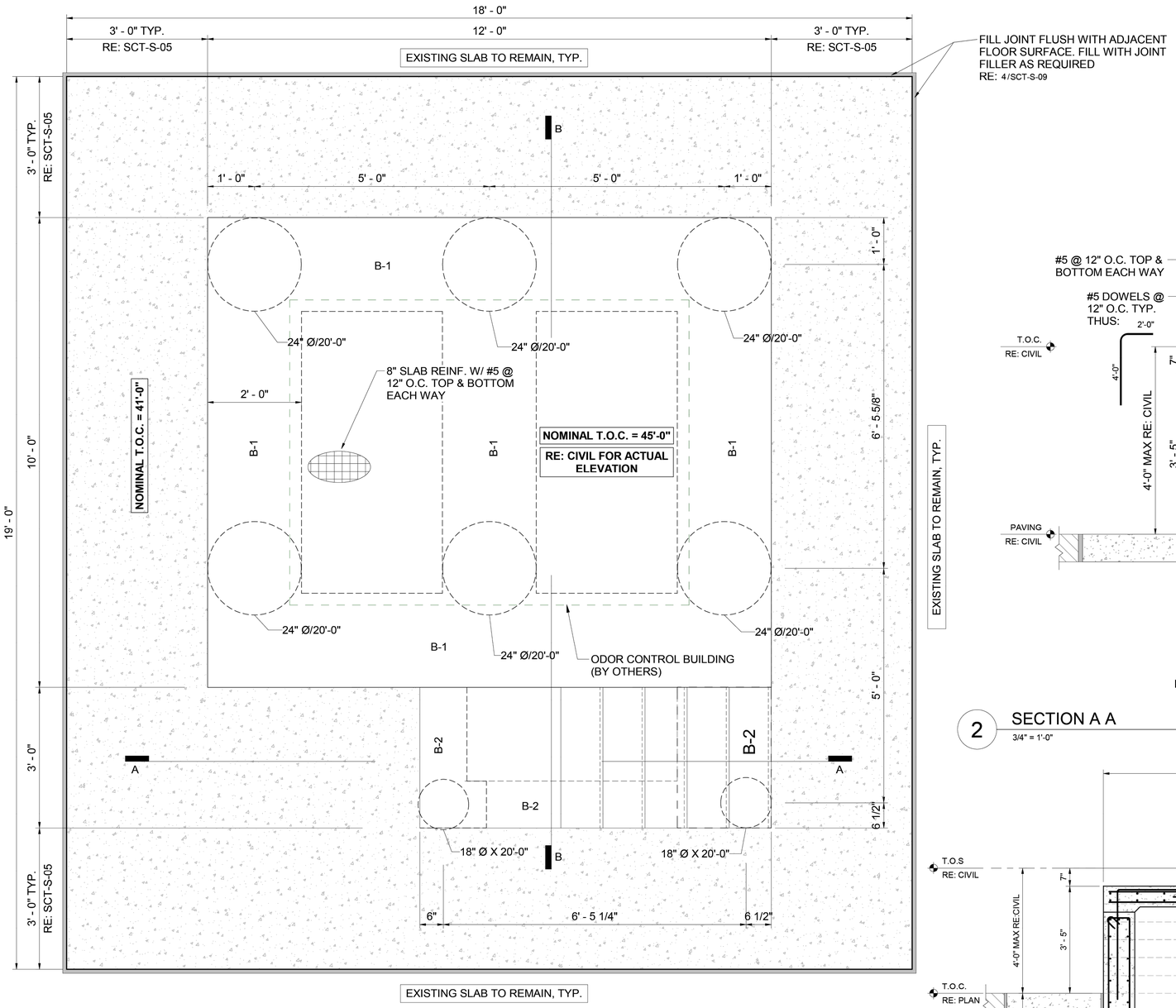

1 ODOR CONTROL FOUNDATION PLAN
3/4" = 1'-0"

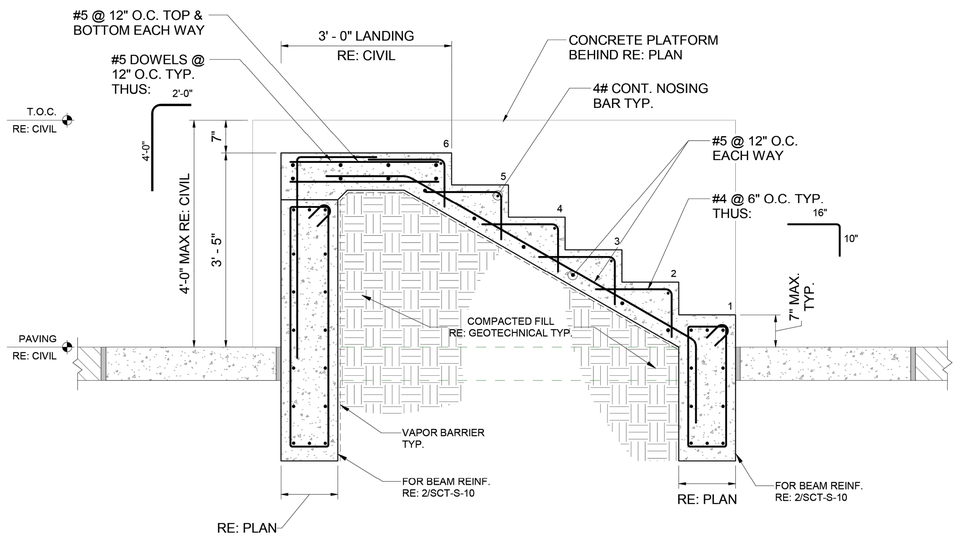

2 SECTION A A
3/4" = 1'-0"

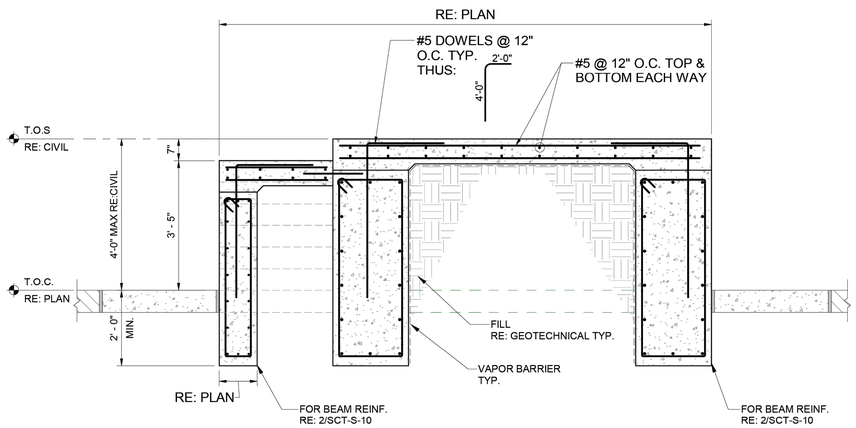

3 SECTION B - B.
1/2" = 1'-0"

IDS Engineering Group
13430 NW. Freeway, Suite 700
Houston, Tx. 77040
713.462.3178
TxEng Firm 2726 / TxSurv Firm 10110700

CONCEPT ENGINEERS
TX. FIRM REGISTRATION # F-04417
Structures for the whole community

PRELIMINARY
NOT FOR CONSTRUCTION, BIDDING, OR PERMIT PURPOSES.
FOR REVIEW ONLY.
DAVID MOORE
TEXAS LICENSE NO. 139405
Date: 05/08/26

CITY OF HOUSTON
DEPARTMENT OF PUBLIC WORKS AND ENGINEERING

LIFT STATION RENEWAL AND REPLACEMENT FY 2023
SCOTT ST #3 LIFT STATION ODOR CONTROL BUILDING FOUNDATION

WBS NUMBER	FOR CITY OF HOUSTON USE ONLY
R-000267-0179-3	
DRAWING SCALE	
AS NOTED	
CITY OF HOUSTONPM	
NAWARAJ PANTA, P.E.	
DWG. NO. SCT-S-07	SHEET NO. 136 OF 361

IDS JOB No. 0057-085-00

PLOTTED: 5/21/2019 1:28 PM

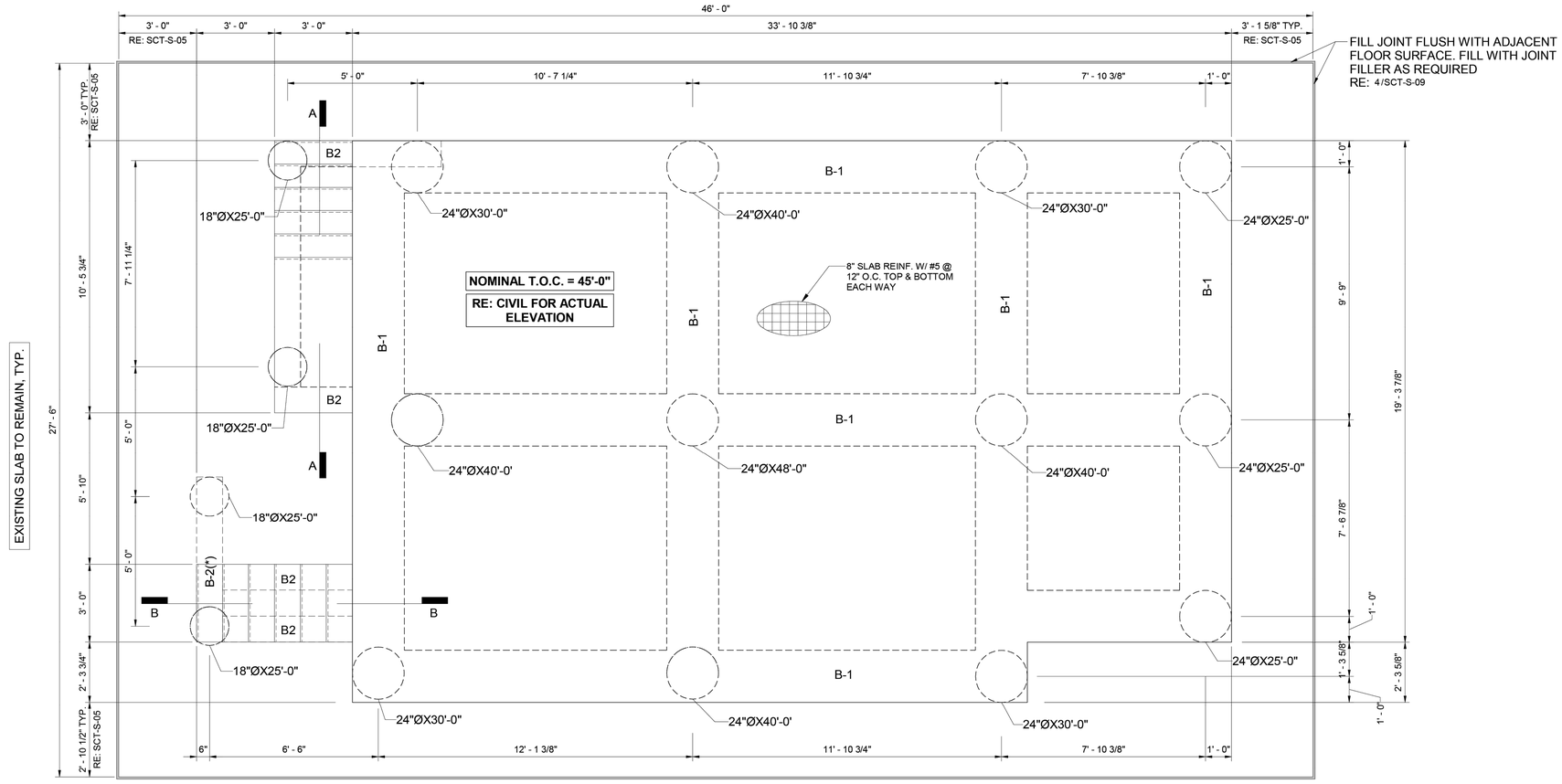

1 ELECTRICAL CONTROL BUILDING FOUNDATION PLAN

3/8" = 1'-0"

FOUNDATION NOTES:

1. CENTER ALL DRILLED SHAFTS UNDER CENTERLINE OF STEEL COLUMN. IF NO STEEL COLUMN IS SHOWN, CENTER DRILLED SHAFTS UNDER CENTER OF GRADE BEAM.
2. ALL STEEL TO BE HOT DIPPED GALVANIZED.
3. FINISH FLOOR ELEVATION = 45'-0". FINISH FLOOR ELEVATION OF NEW STRUCTURAL SLAB 4'-0" MAX FROM EXISTING SLAB. RE: CIVIL FOR ACTUAL ELEVATION.
4. "B1" AS SHOWN ON PLAN INDICATES CONCRETE BEAM TYPE B1. THE TOP ELEVATION OF ALL BEAMS IS AT 44'-0" TYP U.N.O. REFER TO SCT-S-10 FOR BEAM SCHEDULE AND DETAILS.
5. " 18"/20'-0" " AS SHOWN ON PLAN INDICATES A DRILLED STRAIGHT SHAFT THAT IS 18" IN DIAMETER AND 20'-0" LONG MEASURED FROM EXISTING GRADE. THE TOP ELEVATION OF ALL STRAIGHT SHAFTS ARE AT 39'-0", TYP, U.N.O. RE: SCT-S-10 FOR STRAIGHT SHAFT SCHEDULE AND DETAILS.
6. REFER TO CIVIL/MEP FOR DIMENSIONS AND LOCATIONS OF ALL SLOPED AND DEPRESSION.
7. (*) INDICATES BEAMS WITH VARYING DEPTHS. RE: SECTION
8. PORTION OF EXISTING SLAB-ON-GRADE TO BE REMOVED AND REPLACED WITH NEW STRUCTURAL SLAB AS SHOWN ON THIS SHEET. SEE DETAIL SCT-S-09 FOR CONNECTION TO EXISTING SLAB, TYPICAL. CONTRACTOR SHALL VERIFY EXISTING CONDITIONS, INCLUDING SLAB THICKNESS, REINFORCING, AND ELEVATIONS, PRIOR TO SAWCUTTING OR REMOVAL. CONTRACTOR IS RESPONSIBLE FOR MAINTAINING STABILITY OF ADJACENT SLAB AND COORDINATING FINAL ELEVATIONS, JOINT ALIGNMENT, AND SAWCUT LOCATIONS IN THE FIELD.
9. EXTENT OF EXISTING SLAB REMOVAL SHALL BE A MINIMUM OF 3'-0" BEYOND THE EDGE OF THE PROPOSED ELECTRICAL CONTROL BUILDING AND CONCRETE STAIRS, TYPICAL. CONTRACTOR SHALL COORDINATE EXACT REMOVAL LIMITS AND BUILDING LOCATIONS WITH CIVIL DRAWINGS AND VERIFY ALL DIMENSIONS AND LAYOUT IN THE FIELD PRIOR TO DEMOLITION. STRUCTURAL DRAWINGS INDICATE GENERAL INTENT ONLY.

NO.	DATE	REVISION	APP.

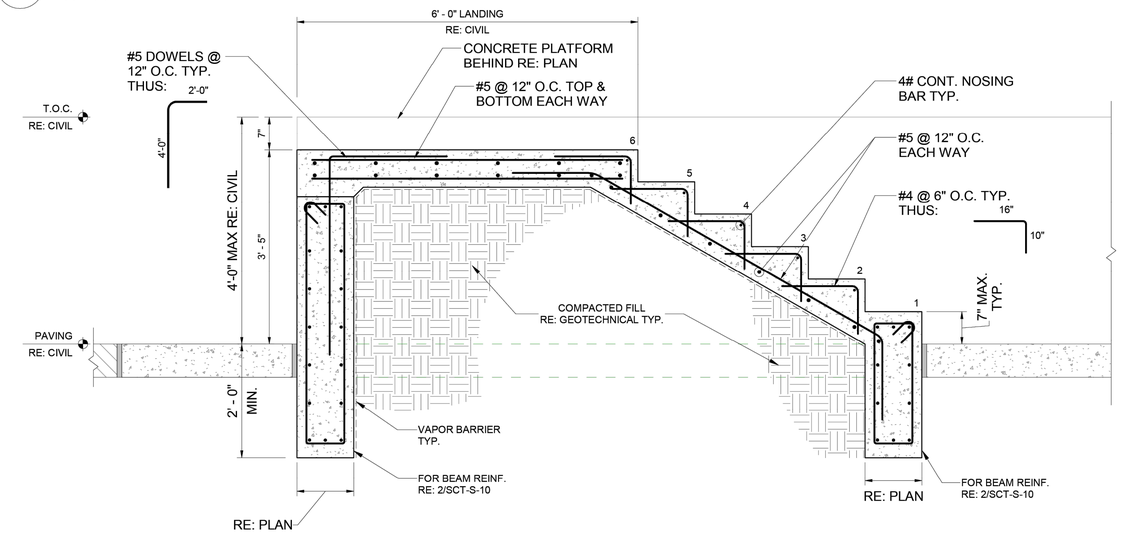

2 SECTION A - A

3/4" = 1'-0"

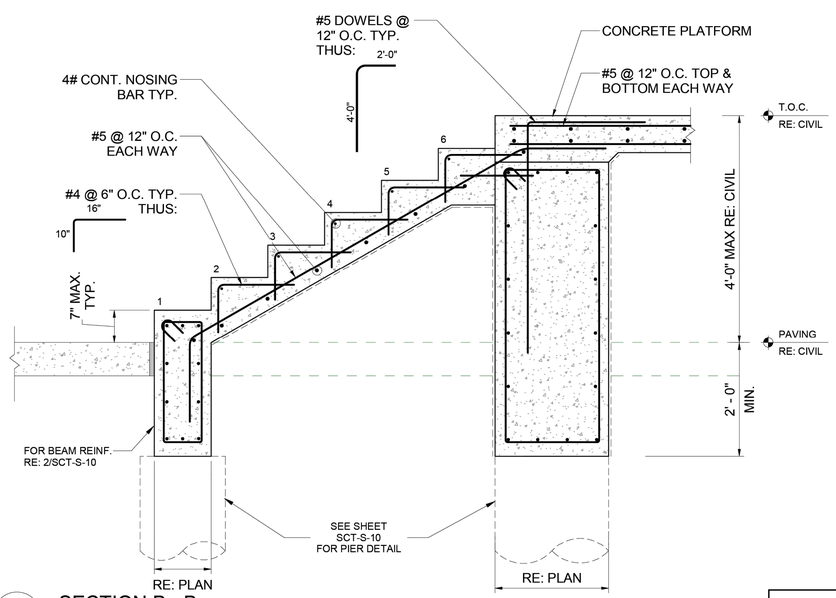

3 SECTION B - B

3/4" = 1'-0"

IDS Engineering Group
13430 NW. Freeway, Suite 700
Houston, Tx. 77040
713.462.3178
TxEng Firm 2726 / TxSurv Firm 10110700

CONCEPT ENGINEERS
TX. FIRM REGISTRATION # F-04417
Structures for the whole community

PRELIMINARY
NOT FOR CONSTRUCTION, BIDDING, OR PERMIT PURPOSES.
FOR REVIEW ONLY.
DAVID MOORE
TEXAS LICENSE NO. 139405
Date: 05/08/26

CITY OF HOUSTON
DEPARTMENT OF PUBLIC WORKS AND ENGINEERING

LIFT STATION RENEWAL AND REPLACEMENT FY 2023

SCOTT ST #3 LIFT STATION ELECTRICAL CONTROL BUILDING FOUNDATION

WBS NUMBER	FOR CITY OF HOUSTON USE ONLY
R-000267-0179-3	
DRAWING SCALE	
AS NOTED	
CITY OF HOUSTONPM	
DWG. NO.	NAWARAJ PANTA, P.E.
SCT-S-08	SHEET NO. 137 OF 361

IDS JOB No. 0057-085-00

FILE PATH: G:\COMMERCIAL PROJECTS\24137 - Lift Station Rehab & Construction\STRUCTURAL\V_DWGS\XREF\24137-TBlock.dwg

PLOTTED: 5/21/2019 1:28 PM

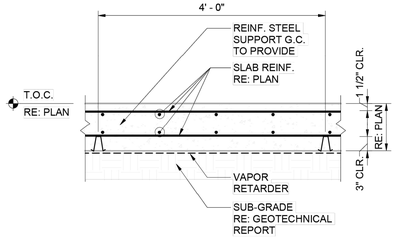

1 TYPICAL SLAB SECTION DETAIL

3/4" = 1'-0"

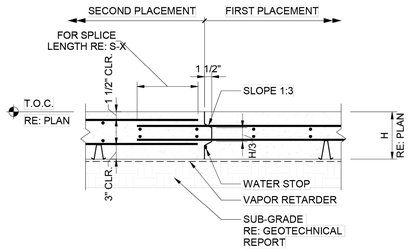

NOTE:
MAXIMUM 80 FEET BETWEEN CONSTRUCTION JOINTS AND 72 HOURS MINIMUM BETWEEN ADJACENT PLACEMENTS.

2 TYPICAL CONSTRUCTION JOINT

3/4" = 1'-0"

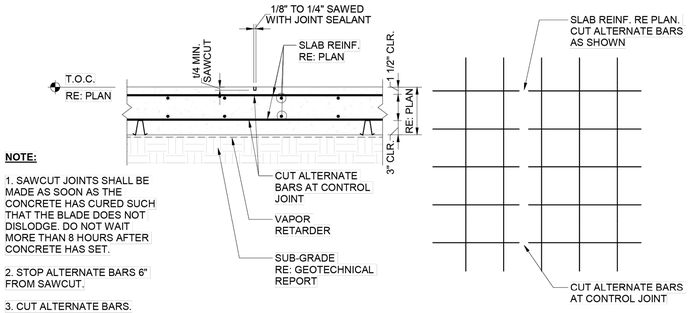

NOTE:

1. SAWCUT JOINTS SHALL BE MADE AS SOON AS THE CONCRETE HAS CURED SUCH THAT THE BLADE DOES NOT DISLODGE. DO NOT WAIT MORE THAN 8 HOURS AFTER CONCRETE HAS SET.

2. STOP ALTERNATE BARS 6" FROM SAWCUT.

3. CUT ALTERNATE BARS.

3 TYPICAL SLAB CONTROL JOINT

3/4" = 1'-0"

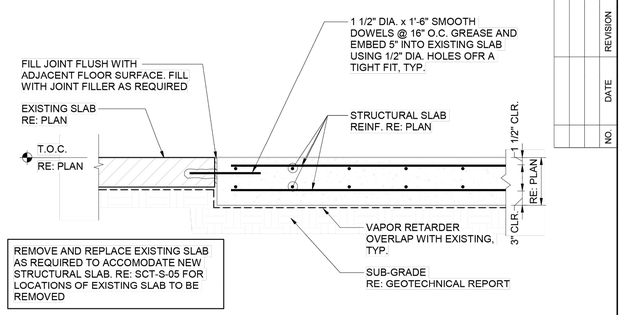

REMOVE AND REPLACE EXISTING SLAB AS REQUIRED TO ACCOMODATE NEW STRUCTURAL SLAB. RE: SCT-S-05 FOR LOCATIONS OF EXISTING SLAB TO BE REMOVED

4 TYP NEW TO EXISTING SLAB CONSTRUCTION JOINT

NO SCALE

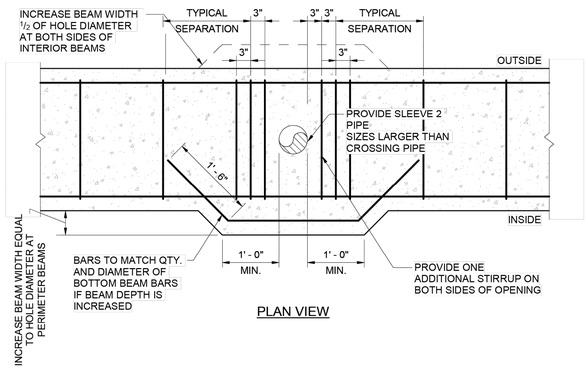

PLAN VIEW

5 VERT. PIPE OPENING LARGER THAN 3" THRU GD. BM.

3/4" = 1'-0"

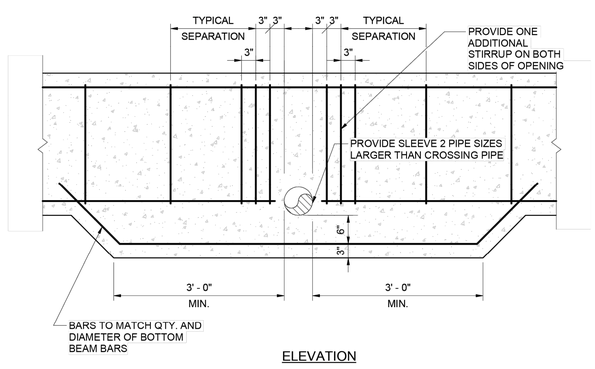

ELEVATION

6 PIPE OPENING THRU GD. BM. IN CONFLICT W/BOT. REINF.

3/4" = 1'-0"

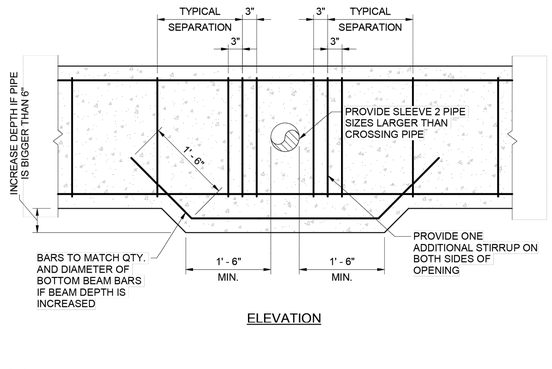

ELEVATION

7 TYP. DETAIL PIPE OPENING THRU GRADE BEAM

3/4" = 1'-0"

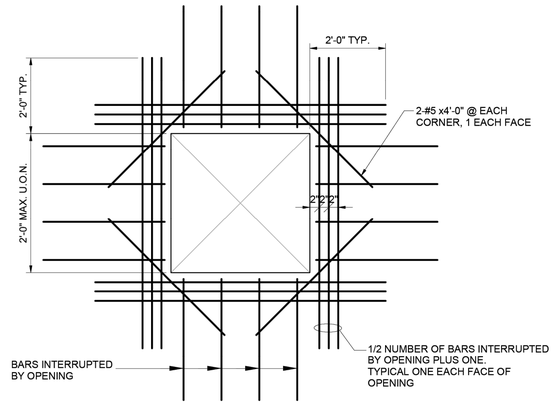

8 TYPICAL ADDITIONAL BAR PLACING DETAIL FOR SLAB

3/4" = 1'-0"

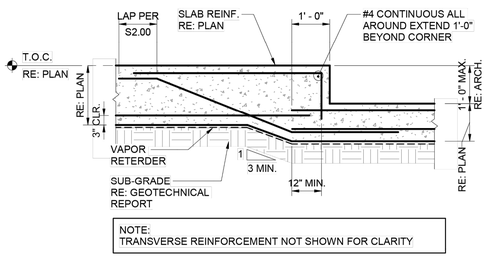

NOTE:
TRANSVERSE REINFORCEMENT NOT SHOWN FOR CLARITY

9 TYP. SLAB DEPRESSION DETAIL

1/2" = 1'-0"

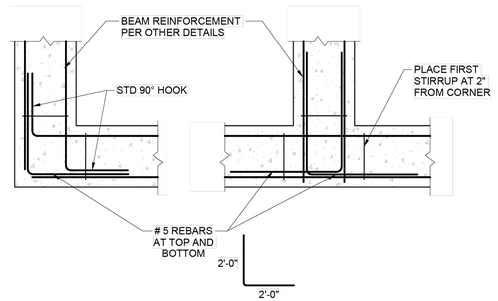

10 TYP. BAR PLACING DETAILS

3/4" = 1'-0"

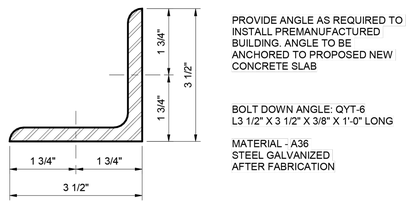

PROVIDE ANGLE AS REQUIRED TO INSTALL PREMANUFACTURED BUILDING. ANGLE TO BE ANCHORED TO PROPOSED NEW CONCRETE SLAB

BOLT DOWN ANGLE: QYT-6
L3 1/2" X 3 1/2" X 3/8" X 1'-0" LONG

MATERIAL - A36
STEEL GALVANIZED AFTER FABRICATION

11 BOLT DOWN ANGLE

6" = 1'-0"

APP.	
REVISION	
DATE	
NO.	

IDS Engineering Group
13430 NW. Freeway, Suite 700
Houston, Tx. 77040
713.462.3178
TxEng Firm 2726 / TxSurv Firm 10110700

CONCEPT ENGINEERS
TX. FIRM REGISTRATION # F-04417
Structures for the whole community

PRELIMINARY
NOT FOR CONSTRUCTION, BIDDING, OR PERMIT PURPOSES.
FOR REVIEW ONLY.
DAVID MOORE
TEXAS LICENSE NO. 139405
Date: 05/08/26

CITY OF HOUSTON
DEPARTMENT OF PUBLIC WORKS AND ENGINEERING

LIFT STATION RENEWAL AND REPLACEMENT FY 2023
SCOTT ST #3 LIFT STATION
TYPICAL FOUNDATION DETAILS

WBS NUMBER	FOR CITY OF HOUSTON USE ONLY
R-000267-0179-3	
DRAWING SCALE	
AS NOTED	
CITY OF HOUSTONPM	
NAWARAJ PANTA, P.E.	
DWG. NO. SCT-S-09	SHEET NO. 138 OF 361

IDS JOB No. 0057-085-00

FILE PATH: G:\COMMERCIAL PROJECTS\24137 - Lift Station Rehab & Construction\STRUCTURAL\JV_DWGS\XREF\24137-TBlock.dwg

PLOTTED: 5/21/2019 1:28 PM

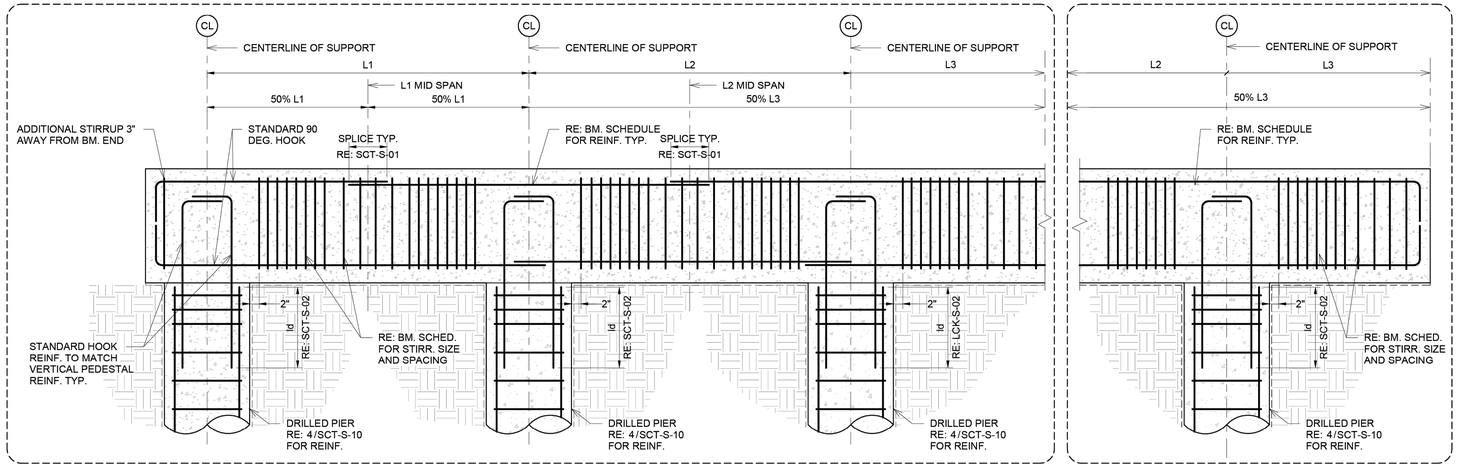

SECTION AT CONTINUOUS BEAM

SECTION AT CANTILEVERED BEAM

1 TYPICAL REINFORCEMENT SPLICE DETAIL AT BEAM (NEW DETAIL).

3/4" = 1'-0"

BEAM SCHEDULE

TAG	WIDTH	DEPTH	TOP REINFORCEMENT	MIDDLE REINFORCEMENT	BOTTOM REINFORCEMENT	STIRRUPS
B1	2'-0"	4'-0"	(5) #7	(6)#6	(5) #7	#4 @ 10" O.C. (3 @ 3" O.C., REST @ 10" O.C.) PROVIDE #4 @ 6" O.C. IN CANTILEVERED END. HOOK LONGITUDINAL BARS IN CANTILEVERED END.
B2	1'-0"	RE: PLAN	(5) #7	(6) #6	(5) #7	#4 @ 10" O.C. (3 @ 3" O.C., REST @ 10" O.C.)

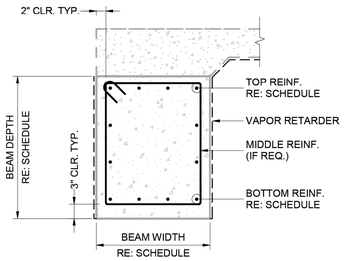

2 BEAM SCHEDULE

3/4" = 1'-0"

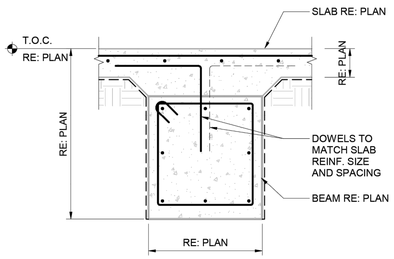

3 SECTION AT INTERIOR BEAM

3/4" = 1'-0"

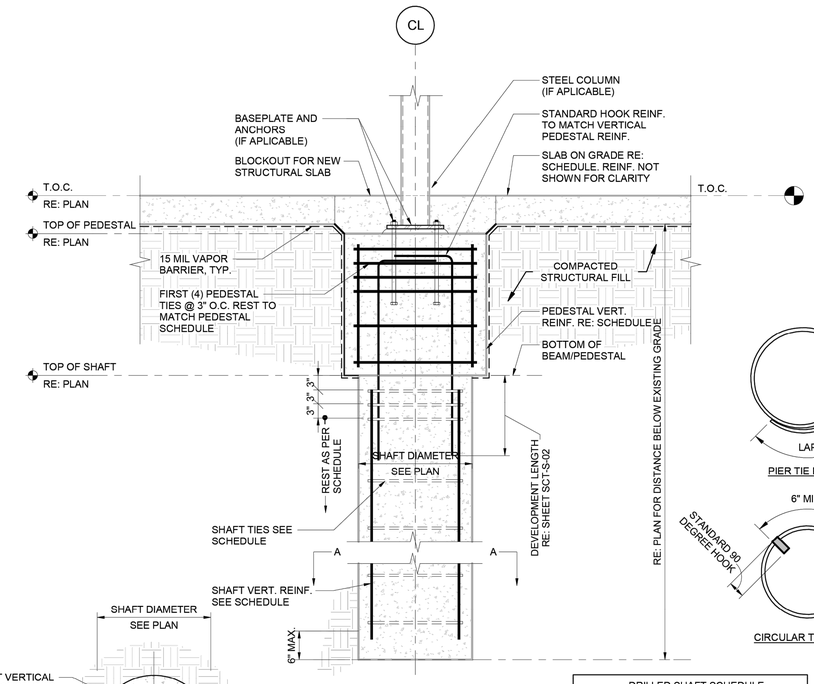

DRILLED SHAFT SCHEDULE		
SHAFT DIAMETER	VERTICAL REINF.	CLOSED TIES
18"	(6) #6	#4 @ 10" O.C.
24"	(8) #7	#4 @ 10" O.C.

4 TYPICAL STRAIGHT SHAFT DETAILS

3/4" = 1'-0"

NO.	DATE	REVISION	APP.

IDS Engineering Group
13430 NW. Freeway, Suite 700
Houston, Tx. 77040
713.462.3178
TxEng Firm 2726 / TxSurv Firm 10110700

CONCEPT ENGINEERS
TX. FIRM REGISTRATION # F-04417
Structures for the whole community

PRELIMINARY
NOT FOR CONSTRUCTION, BIDDING, OR PERMIT PURPOSES.
FOR REVIEW ONLY.
DAVID MOORE
TEXAS LICENSE NO. 139405
Date: 05/08/26

CITY OF HOUSTON
DEPARTMENT OF PUBLIC WORKS AND ENGINEERING

LIFT STATION RENEWAL AND REPLACEMENT FY 2023

SCOTT ST #3 LIFT STATION FOUNDATION DETAILS & SCHEDULES

WBS NUMBER	FOR CITY OF HOUSTON USE ONLY
R-000267-0179-3	
DRAWING SCALE	
AS NOTED	
CITY OF HOUSTONPM	
NAWARAJ PANTA, P.E.	
SHEET NO. 139 OF 361	

DWG. NO. SCT-S-10

IDS JOB No. 0057-085-00

FILE PATH: G:\COMMERCIAL PROJECTS\24137 - Lift Station Rehab & Construction\STRUCTURAL\JV_DWGS\XREF\24137-TBlock.dwg

PLOTTED: 5/12/2026 8:42 PM

FILE PATH: O:\H8108_Lift Station Rehabilitation And Reconstruction (IDS)\6 Drawings\Electrical\Working\Scott #3\H8108_SCT-E-01.dwg

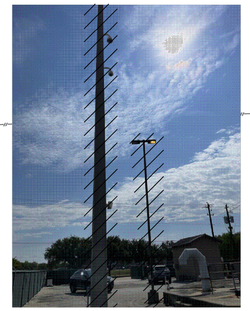

EXISTING WIMAX POLE & LIGHT POLE

PHOTOGRAPH G (7) NTS -



EXISTING SERVICE RACK

PHOTOGRAPH A (1) NTS -

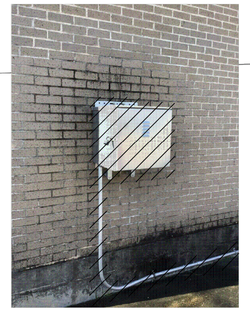

EXISTING WIMAX BOX

PHOTOGRAPH B (2) NTS -

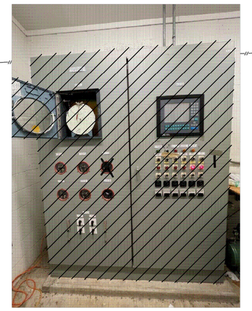

EXISTING CONTROL PANEL

PHOTOGRAPH C (3) NTS -

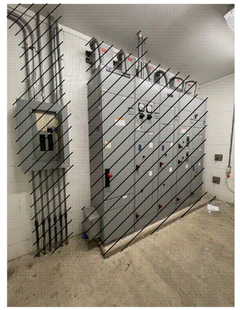

EXISTING MOTOR CONTROL CENTER & LIGHTING PANEL

PHOTOGRAPH D (4) NTS -



EXISTING WW PUMP NO.1, NO.2, NO.3 DISCONNECT

PHOTOGRAPH E (5) NTS -



EXISTING DW PUMP NO.1 & NO.2 DISCONNECT

PHOTOGRAPH F (6) NTS -



EXISTING RADAR TRANSMITTER J-BOX

PHOTOGRAPH F (8) NTS -

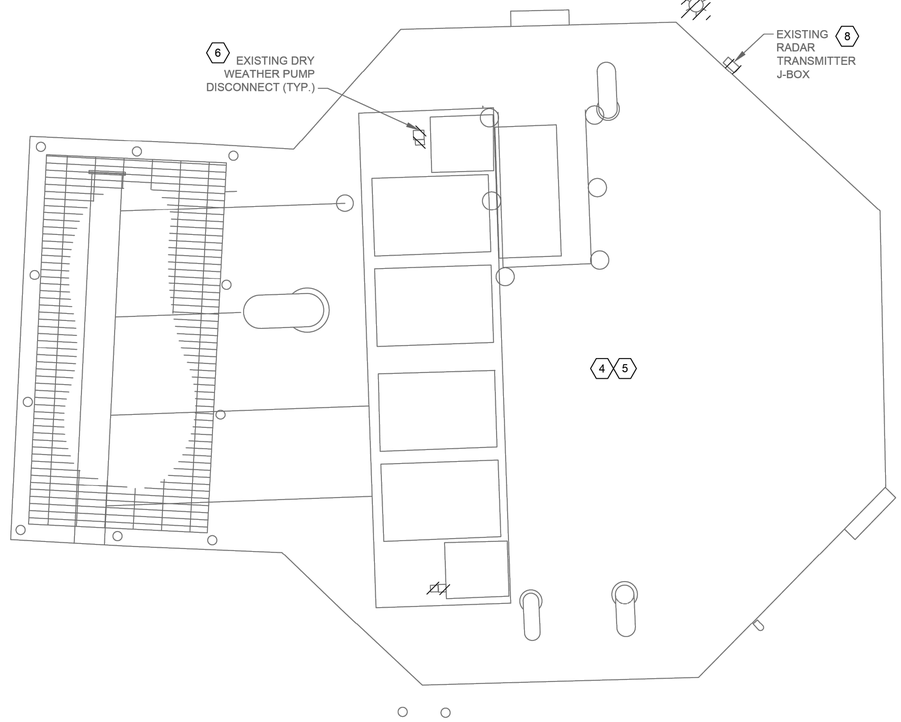

SCOTT #3 ELECTRICAL EXISTING SITE PLAN

1"= 5'-0"

SCALE: 1"= 5'

0' 5' 10' 15'

NOTES BY SYMBOL "(#)":

1. EXISTING SERVICE RACK TO BE DEMOLISHED AND REMOVED.
2. EXISTING WIMAX BOX TO BE DEMOLISHED AND REMOVED.
3. EXISTING CONTROL PANEL TO BE DEMOLISHED AND REMOVED.
4. EXISTING MOTOR CONTROL CENTER & LIGHTING PANEL TO BE DEMOLISHED AND REMOVED.
5. EXISTING WET WEATHER PUMP NO.1 & NO.2 & NO.3 DISCONNECT TO BE DEMOLISHED AND REMOVED.
6. EXISTING DRY WEATHER PUMP NO.1 & NO.2 DISCONNECT TO BE DEMOLISHED AND REMOVED.
7. EXISTING WIMAX & LIGHT POLE TO BE DEMOLISHED AND REMOVED.
8. EXISTING RADAR TRANSMITTER J-BOX TO BE DEMOLISHED AND REMOVED.

GENERAL NOTES:

1. THE OWNER HAS THE RIGHT OF FIRST REFUSAL TO THE EQUIPMENT BEING REMOVED. CONTRACTOR SHALL DELIVER THE EQUIPMENT WHICH OWNER WISHES TO KEEP AT LOCATION DESIGNATED BY THE OWNER. SEE SPECIFICATIONS SECTION 16060 FOR ELECTRICAL DEMOLITION.

NO.	DATE	REVISION	APP.

FOR INTERIM REVIEW ONLY NOT INTENDED FOR PERMIT, BIDDING OR CONSTRUCTION PURPOSES.
ENGINEER:
HOSS FOROUZAN
P.E. SERIAL NO.77748
05/18/2026

GAI
Gupta & Associates, Inc.
CONSULTING ENGINEERING
Registration No. F-2593
302 Dennis St.,
Houston, Texas 77006
Tel: 713-636-2916
Fax: 713-636-2987
email: hforouzan@gaiconsulting.com

IDS Engineering Group
13430 NW. Freeway
Suite 700
Houston, Tx. 77040
713.462.3178
TxEng Firm 2726
TxSurv Firm 10110700

CITY OF HOUSTON
HOUSTON PUBLIC WORKS

LIFT STATION RENEWAL AND REPLACEMENT FY 2023

SCOTT NO.3 LIFT STATION ELECTRICAL DEMOLITION SITE PLAN

WBS NUMBER	FOR CITY OF HOUSTON USE ONLY
R-000267-0179-4	
DRAWING SCALE	
HORIZ:1"=5'-0" VERT:1"=5'-0"	
CITY OF HOUSTON PM	
NAWARAJ PANTA, P.E.	
SHEET NO. 140 OF 361	

DWG. NO. SCT-E-01

IDS JOB No. 0057-085-00

PLOTTED: 5/12/2026 8:42 PM

FILE PATH: O:\H8108_Lift Station Rehabilitation And Reconstruction (IDS)\6 Drawings\Electrical\Working\Scott #3\H8108_SCT-E-02.dwg

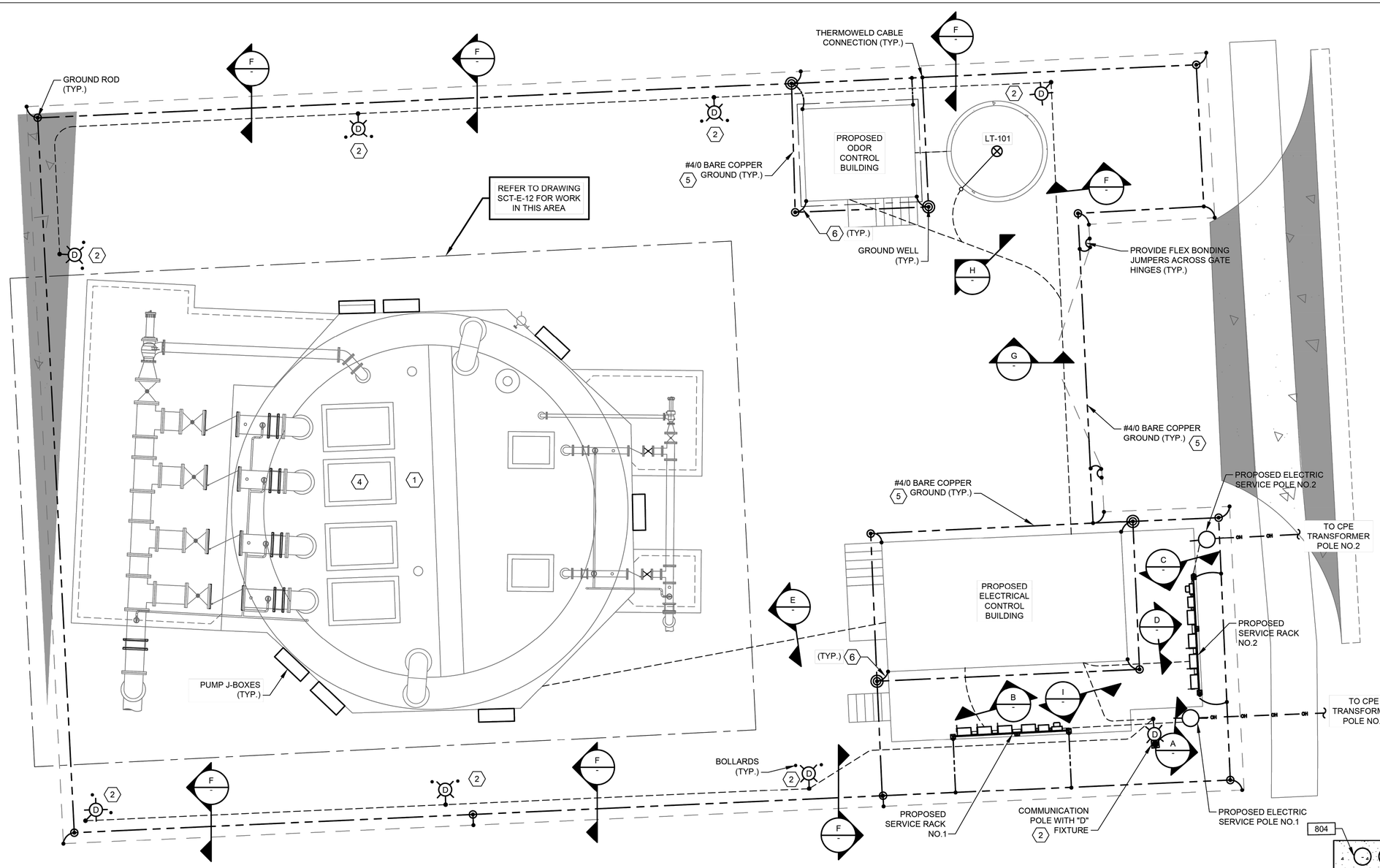

SCALE: 1"= 6'

0' 6' 12' 18'

NOTES:

1. THE ELECTRICAL INSTALLATION IN THE WET WELL SHALL BE EXPLOSION PROOF, IN ACCORDANCE WITH THE NATIONAL ELECTRICAL CODE FOR CLASS I, DIVISION 1 LOCATIONS.
2. YARD LIGHT CONTROLLED BY LIGHTING SWITCH.
3. TYPE "B" FIXTURE TO BE INSTALLED ON THE POLE PROVIDING WIRES FOR THE "B" LIGHT.
4. INSIDE WETWELL RATED NEMA CLASS , DIV. 1, OUTSIDE ABOVE GROUND, AROUND WETWELL RATED CLASS 1, DIV. 2 ACCORDING TO NFPA 820.
5. GROUNDING LOOP SHALL BE BURIED 30" BELOW FINISHED GRADE.
6. #4/0 BARE COPPER GROUND TO BE BONDED TO REBAR IN CONCRETE FOOTER.

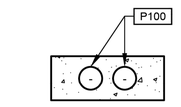

DUCTBANK SECTION A NTS

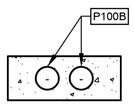

DUCTBANK SECTION B NTS

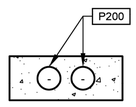

DUCTBANK SECTION C NTS

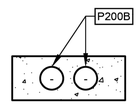

DUCTBANK SECTION D NTS

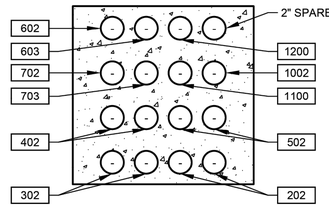

DUCTBANK SECTION E NTS

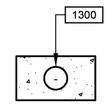

DUCTBANK SECTION F NTS

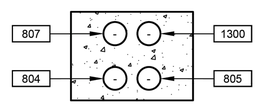

DUCTBANK SECTION G NTS

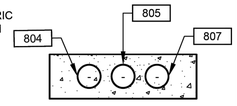

DUCTBANK SECTION H NTS

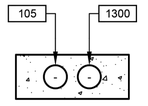

DUCTBANK SECTION I NTS

SCOTT #3 ELECTRICAL PROPOSED SITE PLAN
1"= 6'-0"

FOR INTERIM REVIEW ONLY NOT INTENDED FOR PERMIT, BIDDING OR CONSTRUCTION PURPOSES.
ENGINEER:
HOSS FOROUZAN
P.E. SERIAL NO.77748
05/18/2026

GAI Gupta & Associates, Inc.
CONSULTING ENGINEERING
Registration No. F-2593
302 Dennis St., Houston, Texas 77006
Tel: 713-636-2936
Fax: 713-636-2987
email: hforouzan@gaiconsulting.com

IDS Engineering Group
13430 NW. Freeway
Suite 700
Houston, Tx. 77040
713.462.3178
TxEng Firm 2726
TxSurv Firm 10110700

CITY OF HOUSTON
HOUSTON PUBLIC WORKS

LIFT STATION RENEWAL AND REPLACEMENT FY 2023

SCOTT NO.3 LIFT STATION PROPOSED ELECTRICAL SITE PLAN

WBS NUMBER	FOR CITY OF HOUSTON USE ONLY
R-000267-0179-4	
DRAWING SCALE	
HORIZ:1"=6'-0" VERT:1"=6'-0"	
CITY OF HOUSTON PM	
NAWARAJ PANTA, P.E.	
DWG. NO. SCT-E-02	SHEET NO. 141 OF 361

NO.	DATE	REVISION	APP.

IDS JOB No. 0057-085-00

PLOTTED: 5/12/2026 8:42 PM

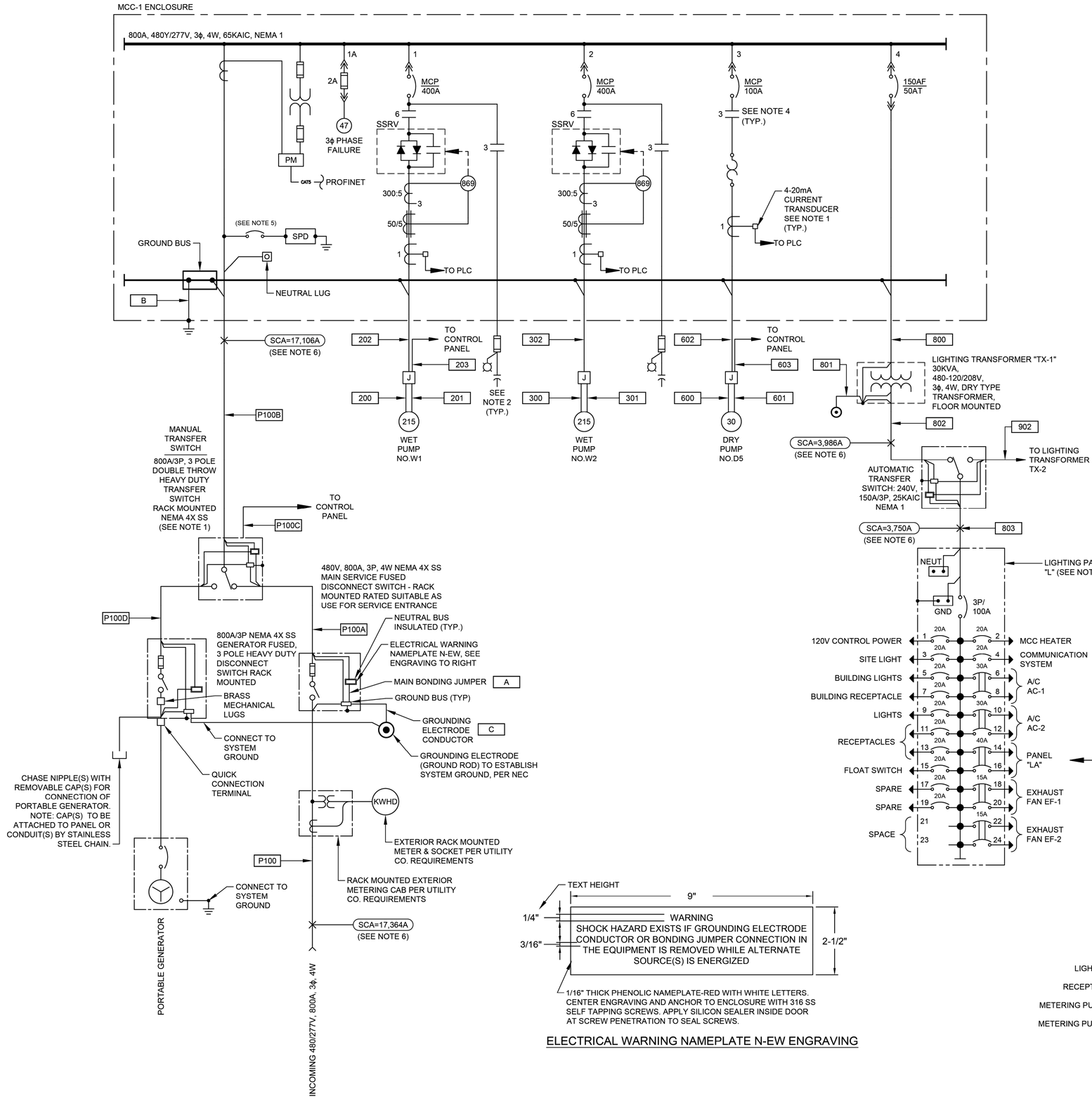

MCC-1 ELECTRICAL LOAD ANALYSIS		
LOAD DESCRIPTION	CONNECTED KVA	DEMAND KVA
WET PUMP NO. W1 (215HP)	216.2	216.2
WET PUMP NO. W2 (215HP)	216.2	216.2
DRY PUMP NO. D5 (30HP)	33.3	33.3
LIGHTING @ 125%	0.4	0.5
RECEPTACLE @ 180 VA	0.5	0.5
HVAC	3.5	3.5
MISC	14.2	14.2
25% OF LARGEST MOTOR LOAD		54.1
TOTAL CALCULATED LOAD		538.5
538.5KVA @ 480V/3ϕ = 647.2A		
800A SERVICE EXCEEDS NEC REQUIREMENTS		

GENERAL NOTES:

1. NO ELECTRICAL MATERIAL, APPARATUS, DEVICES, APPLIANCES, FIXTURES, OR EQUIPMENT SHALL BE SOLD OR INSTALLED IN THE CITY UNLESS THEY ARE IN CONFORMANCE WITH THE PROVISIONS OF SECTION 508 CITY OF HOUSTON ELECTRICAL CODE, THE LAWS OF THE STATE OF TEXAS AND ANY APPLICABLE RULES AND REGULATIONS ISSUED UNDER THE AUTHORITY OF THE STATE STATUES. THE MAKER'S NAME, TRADEMARK, OR OTHER IDENTIFICATION SYMBOL SHALL BE PLACED ON ALL ELECTRICAL MATERIALS, APPARATUS, DEVICES, APPLIANCES, FIXTURES, AND EQUIPMENT USED OR INSTALLED UNDER THE PROVISIONS OF THIS CODE. ALL ELECTRICAL MATERIALS AND EQUIPMENT SHALL BE LISTED AND LABELED FOR THE INTENDED USE AND SHALL BE INCLUDED IN A LIST PUBLISHED BY AN APPROVAL AGENCY.

NOTES:

1. PROVIDE 5A PRIMARY TO 4-20mA CURRENT TRANSDUCER.
2. CONTRACTOR TO COORDINATE POWER FACTOR CORRECTION CAPACITOR SIZE WITH PUMP MANUFACTURER. MINIMUM 95% POWER FACTOR CORRECTION AT FULL LOAD. MOUNT CAPACITORS EXTERNAL ABOVE MCC ON THE APPROPRIATE SECTION.
3. COMBINATION OF CT AND OVERLOAD RELAY AS REQUIRED.
4. STARTER NEMA SIZE 3 OR GREATER SHALL BE VACUUM TYPE.
5. PROVIDE BREAKER ACCORDING TO MANUFACTURER'S REQUIREMENTS.
6. POINT TO POINT METHOD IS USED FOR SHORT CIRCUIT CURRENT CALCULATION.
7. CONTRACTOR SHALL PROVIDE A PERMANENTLY AFFIXED LABEL (2" X 3") SHOWING THE AVAILABLE FAULT CURRENT AND CALCULATION DATE. THE LABEL SHALL BE BLUE LETTERING ON A CONTRASTING BACKGROUND.
8. THE INSULATION TYPES OF ALL ELECTRICAL CONDUCTOS USED IN THE PROJECT HAVE BEEN SPECIFIED IN ELECTRICAL SPECIFICATIONS (16120, 16121, AND 16122). THE TYPES OF CONDUITS USED IN THE PROJECT HAS BEEN SPECIFIED IN ELECTRICAL SPECIFICATIONS 16111.
9. REFER TO INSTRUMENTATION DRAWINGS SCT-I-10, SCT-I-11, SCT-I-12, SCT-I-13, SCT-I-14, SCT-I-15, FOR PUMP CONTROL SCHEMATIC.
10. LIGHTING PANEL "L": 120/208V, 3ϕ, 4W, 100A MCB, 24 CIRCUTS, 10KAIC, NEMA 1
11. LIGHTING PANEL "L": 120/208V, 1ϕ, 4W, 40A MCB, 12 CIRCUTS, 10KAIC, NEMA 4X 316SS

ELECTRICAL WARNING NAMEPLATE N-EW ENGRAVING

NO.	DATE	REVISION	APP.

FOR INTERIM REVIEW
ONLY NOT INTENDED FOR
PERMIT, BIDDING OR
CONSTRUCTION PURPOSES.
ENGINEER:
HOSS FOROUZAN
P.E. SERIAL NO.77748
05/18/2026

GAI
Gupta & Associates, Inc.
CONSULTING ENGINEERING
Registration No. F-2593
302 Dennis St.,
Houston, Texas 77006
Tel: 713-636-2936
Fax: 713-636-2987
email: hforouzan@gaiconsulting.com

IDS Engineering Group
13430 NW. Freeway
Suite 700
Houston, Tx. 77040
713.462.3178
TxEng Firm 2726
TxSurv Firm 10110700

CITY OF HOUSTON
HOUSTON PUBLIC WORKS

LIFT STATION RENEWAL AND REPLACEMENT FY 2023

SCOTT NO.3 LIFT STATION MCC–1 SINGLE LINE DIAGRAM

WBS NUMBER	FOR CITY OF HOUSTON USE ONLY
R–000267–0179–4	
DRAWING SCALE	
HORIZ: NONE VERT: NONE	
CITY OF HOUSTON PM	
NAWARAJ PANTA, P.E.	
SHEET NO. 142 OF 361	

DWG. NO. SCT–E–03

IDS JOB No. 0057-085-00

FILE PATH: O:\H8108_Lift Station Rehabilitation And Reconstruction (IDS)\6 Drawings\Electrical\Working\Scott #3\H8108_SCT–E–03.dwg

PLOTTED: 5/12/2026 8:42 PM

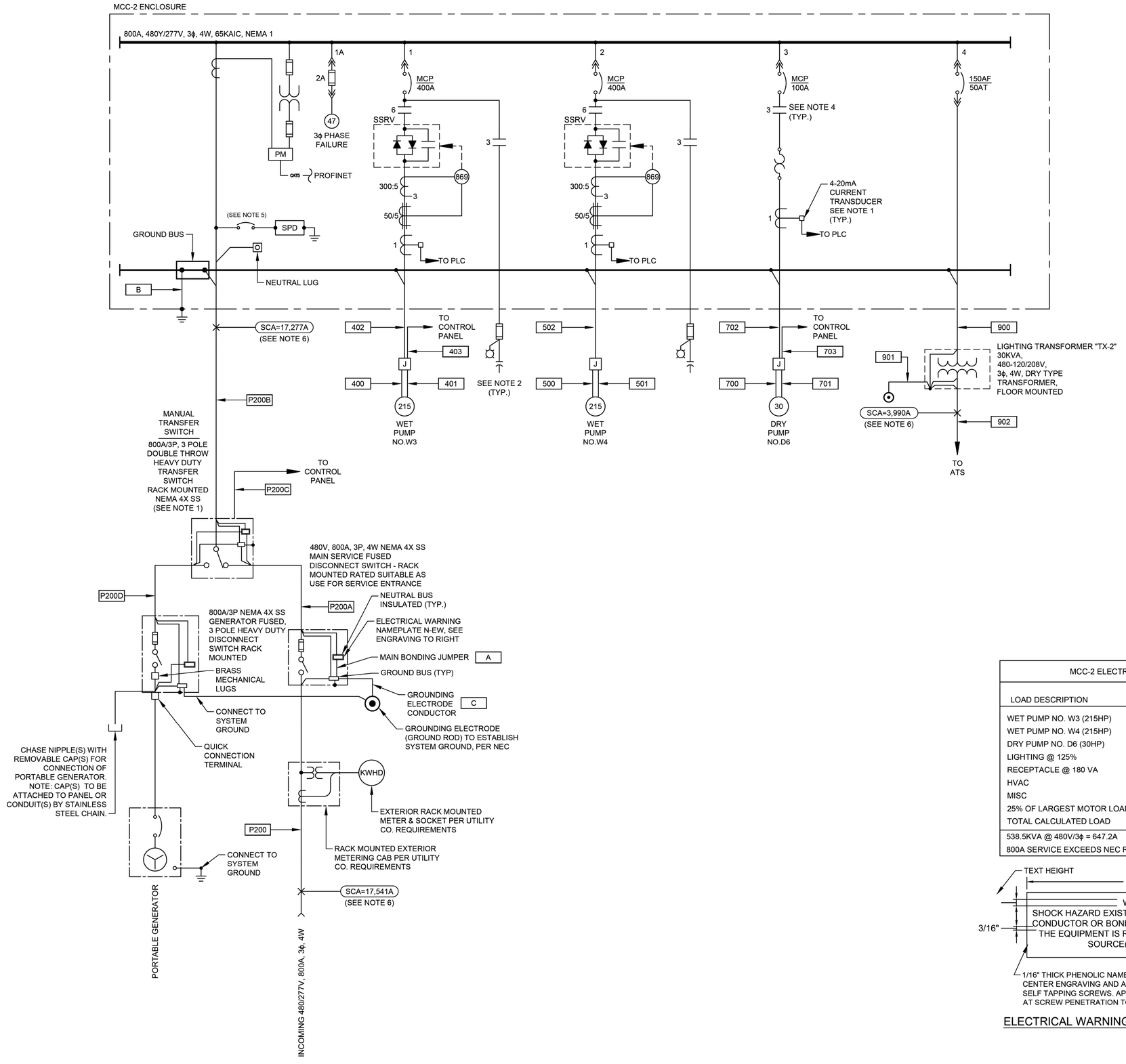

NOTES:

1. PROVIDE 5A PRIMARY TO 4-20mA CURRENT TRANSDUCER.
2. CONTRACTOR TO COORDINATE POWER FACTOR CORRECTION CAPACITOR SIZE WITH PUMP MANUFACTURER. MINIMUM 95% POWER FACTOR CORRECTION AT FULL LOAD. MOUNT CAPACITORS EXTERNAL ABOVE MCC ON THE APPROPRIATE SECTION.
3. COMBINATION OF CT AND OVERLOAD RELAY AS REQUIRED.
4. STARTER NEMA SIZE 3 OR GREATER SHALL BE VACUUM TYPE.
5. PROVIDE BREAKER ACCORDING TO MANUFACTURER'S REQUIREMENTS.
6. POINT TO POINT METHOD IS USED FOR SHORT CIRCUIT CURRENT CALCULATION.
7. CONTRACTOR SHALL PROVIDE A PERMANENTLY AFFIXED LABEL (2" X 3") SHOWING THE AVAILABLE FAULT CURRENT AND CALCULATION DATE. THE LABEL SHALL BE BLUE LETTERING ON A CONTRASTING BACKGROUND.
8. THE INSULATION TYPES OF ALL ELECTRICAL CONDUCTOS USED IN THE PROJECT HAVE BEEN SPECIFIED IN ELECTRICAL SPECIFICATIONS (16120, 16121, AND 16122). THE TYPES OF CONDUITS USED IN THE PROJECT HAS BEEN SPECIFIED IN ELECTRICAL SPECIFICATIONS 16111.
9. REFER TO INSTRUMENTATION DRAWINGS SCT-I-10, SCT-I-11, SCT-I-12, SCT-I-13, SCT-I-14, SCT-I-15, FOR PUMP CONTROL SCHEMATIC.

GENERAL NOTES:

1. NO ELECTRICAL MATERIAL, APPARATUS, DEVICES, APPLIANCES, FIXTURES, OR EQUIPMENT SHALL BE SOLD OR INSTALLED IN THE CITY UNLESS THEY ARE IN CONFORMANCE WITH THE PROVISIONS OF SECTION 508 CITY OF HOUSTON ELECTRICAL CODE, THE LAWS OF THE STATE OF TEXAS AND ANY APPLICABLE RULES AND REGULATIONS ISSUED UNDER THE AUTHORITY OF THE STATE STATUES. THE MAKER'S NAME, TRADEMARK, OR OTHER IDENTIFICATION SYMBOL SHALL BE PLACED ON ALL ELECTRICAL MATERIALS, APPARATUS, DEVICES, APPLIANCES, FIXTURES, AND EQUIPMENT USED OR INSTALLED UNDER THE PROVISIONS OF THIS CODE. ALL ELECTRICAL MATERIALS AND EQUIPMENT SHALL BE LISTED AND LABELED FOR THE INTENDED USE AND SHALL BE INCLUDED IN A LIST PUBLISHED BY AN APPROVAL AGENCY.

MCC-2 ELECTRICAL LOAD ANALYSIS		
LOAD DESCRIPTION	CONNECTED KVA	DEMAND KVA
WET PUMP NO. W3 (215HP)	216.2	216.2
WET PUMP NO. W4 (215HP)	216.2	216.2
DRY PUMP NO. D6 (30HP)	33.3	33.3
LIGHTING @ 125%	0.4	0.5
RECEPTACLE @ 180 VA	0.5	0.5
HVAC	3.5	3.5
MISC	14.2	14.2
25% OF LARGEST MOTOR LOAD		54.1
TOTAL CALCULATED LOAD		538.5
538.5KVA @ 480V/3ϕ = 647.2A		
800A SERVICE EXCEEDS NEC REQUIREMENTS		

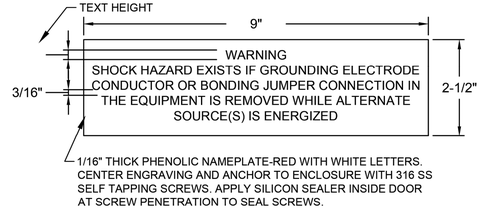

ELECTRICAL WARNING NAMEPLATE N-EW ENGRAVING

NO.	DATE	REVISION	APP.

FOR INTERIM REVIEW ONLY NOT INTENDED FOR PERMIT, BIDDING OR CONSTRUCTION PURPOSES.
ENGINEER:
HOSS FOROUZAN
P.E. SERIAL NO.77748
05/18/2026

GAI
Gupta & Associates, Inc.
CONSULTING ENGINEERING
Registration No. F-2593
302 Dennis St.,
Houston, Texas 77006
Tel: 713-636-2936
Fax: 713-636-2987
email: hforouzan@gaiconsulting.com

IDS Engineering Group
13430 NW. Freeway
Suite 700
Houston, Tx. 77040
713.462.3178
TxEng Firm 2726
TxSurv Firm 10110700

CITY OF HOUSTON
HOUSTON PUBLIC WORKS

LIFT STATION RENEWAL AND REPLACEMENT FY 2023

SCOTT NO.3 LIFT STATION MCC–2 SINGLE LINE DIAGRAM

WBS NUMBER	FOR CITY OF HOUSTON USE ONLY
R–000267–0179–4	
DRAWING SCALE	
HORIZ: NONE VERT: NONE	
CITY OF HOUSTON PM	
NAWARAJ PANTA, P.E.	
SHEET NO. 143 OF 361	

DWG. NO. SCT–E–04

IDS JOB No. 0057-085-00

FILE PATH: O:\H8108_Lift Station Rehabilitation And Reconstruction (IDS)\6 Drawings\Electrical\Working\Scott #3\H8108_SCT–E–04.dwg

PLOTTED: 5/12/2026 8:42 PM

FILE PATH: O:\H8108_Lift Station Rehabilitation And Reconstruction (IDS)\6 Drawings\Electrical\Working\Scott #3\H8108_SCT-E-05.dwg

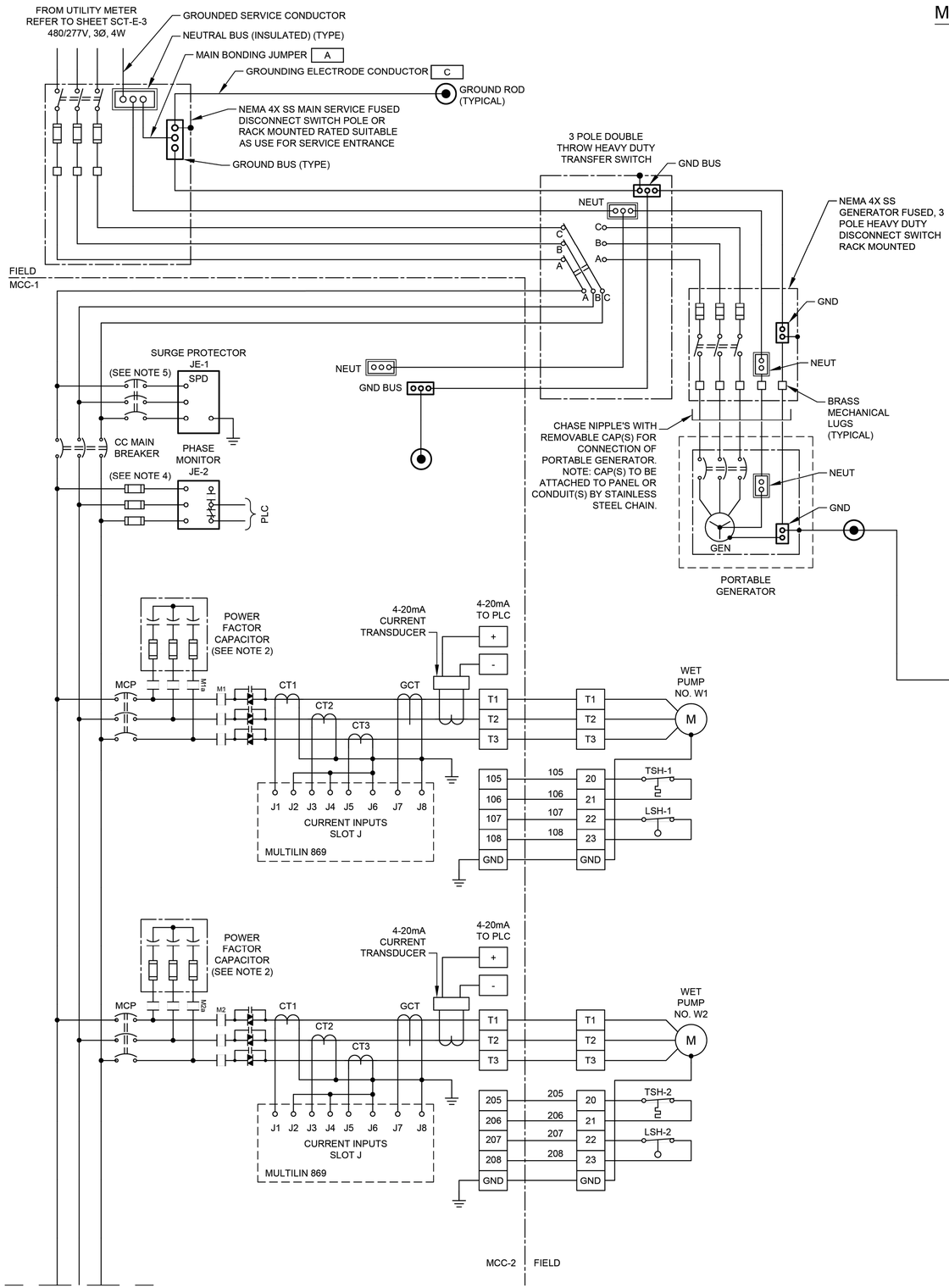

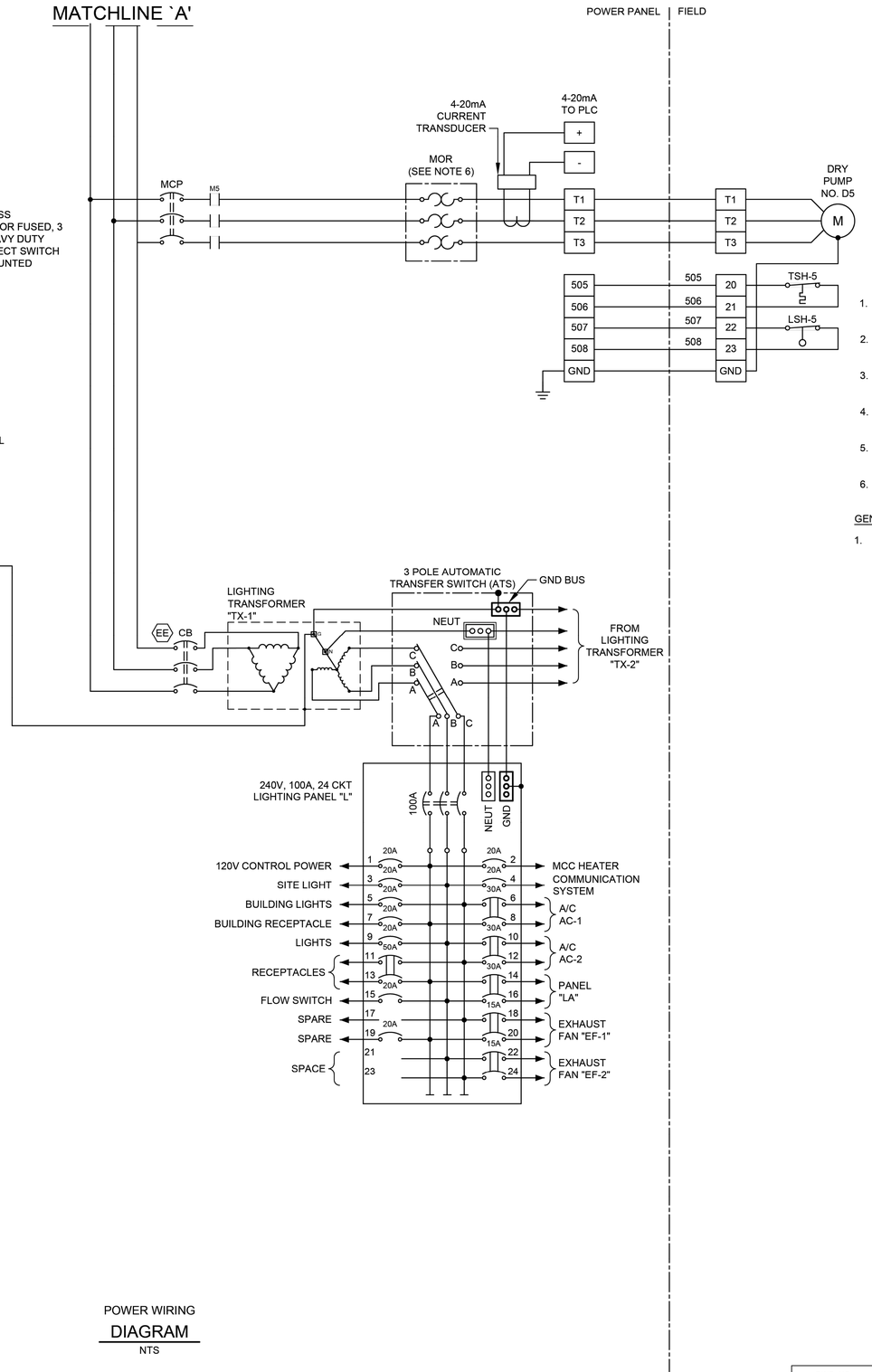

POWER WIRING DIAGRAM
NTS

1. UNLESS OTHERWISE INDICATE, ALL DEVICES WITHOUT FURTHER DESIGNATION ARE LOCATED AT THE CONTROL PANEL.
2. CONTRACTOR TO COORDINATE POWER FACTOR CORRECTION CAPACITOR SIZE WITH PUMP MANUFACTURER.
3. CONTRACTOR SHALL TERMINATE POWER & CONTROL WIRES PER MANUFACTURER'S REQUIREMENTS.
4. PROVIDE BREAKER SIZE ACCORDING TO MANUFACTURER'S REQUIREMENTS.
5. PROVIDE FUSE SIZE ACCORDING TO MANUFACTURER'S REQUIREMENTS.
6. THE COMBINATION OF CT AND MOTOR OVERLOAD RELAY IF REQUIRED.

GENERAL NOTES:

1. NO ELECTRICAL MATERIAL, APPARATUS, DEVICES, APPLIANCES, FIXTURES, OR EQUIPMENT SHALL BE SOLD OR INSTALLED IN THE CITY UNLESS THEY ARE IN CONFORMANCE WITH THE PROVISIONS OF SECTION 508 CITY OF HOUSTON ELECTRICAL CODE, THE LAWS OF THE STATE OF TEXAS AND ANY APPLICABLE RULES AND REGULATIONS ISSUED UNDER THE AUTHORITY OF THE STATE STATUES. THE MAKER'S NAME, TRADEMARK, OR OTHER IDENTIFICATION SYMBOL SHALL BE PLACED ON ALL ELECTRICAL MATERIALS, APPARATUS, DEVICES, APPLIANCES, FIXTURES, AND EQUIPMENT USED OR INSTALLED UNDER THE PROVISIONS OF THIS CODE. ALL ELECTRICAL MATERIALS AND EQUIPMENT SHALL BE LISTED AND LABELED FOR THE INTENDED USE AND SHALL BE INCLUDED IN A LIST PUBLISHED BY AN APPROVAL AGENCY.

NO.	DATE	REVISION	APP.

FOR INTERIM REVIEW
ONLY NOT INTENDED FOR
PERMIT, BIDDING OR
CONSTRUCTION PURPOSES.
ENGINEER:
HOSS FOROUZAN
P.E. SERIAL NO.77748
05/18/2026

GAI
Gupta & Associates, Inc.
CONSULTING ENGINEERING
Registration No. F-2593
302 Dennis St.,
Houston, Texas 77006
Tel: 713-636-2936
Fax: 713-636-2987
email: hforouzan@gaiconsulting.com

IDS Engineering Group
13430 NW. Freeway
Suite 700
Houston, Tx. 77040
713.462.3178
TxEng Firm 2726
TxSurv Firm 10110700

CITY OF HOUSTON
HOUSTON PUBLIC WORKS

LIFT STATION RENEWAL AND REPLACEMENT FY 2023

SCOTT NO.3 LIFT STATION MCC–1 THREE–LINE DIAGRAM

WBS NUMBER	FOR CITY OF HOUSTON USE ONLY
R–000267–0179–4	
DRAWING SCALE	
HORIZ: NONE VERT: NONE	
CITY OF HOUSTON PM	
NAWARAJ PANTA, P.E.	
SHEET NO. 144 OF 361	

DWG. NO. SCT–E–05

IDS JOB No. 0057-085-00

PLOTTED: 5/12/2026 8:42 PM

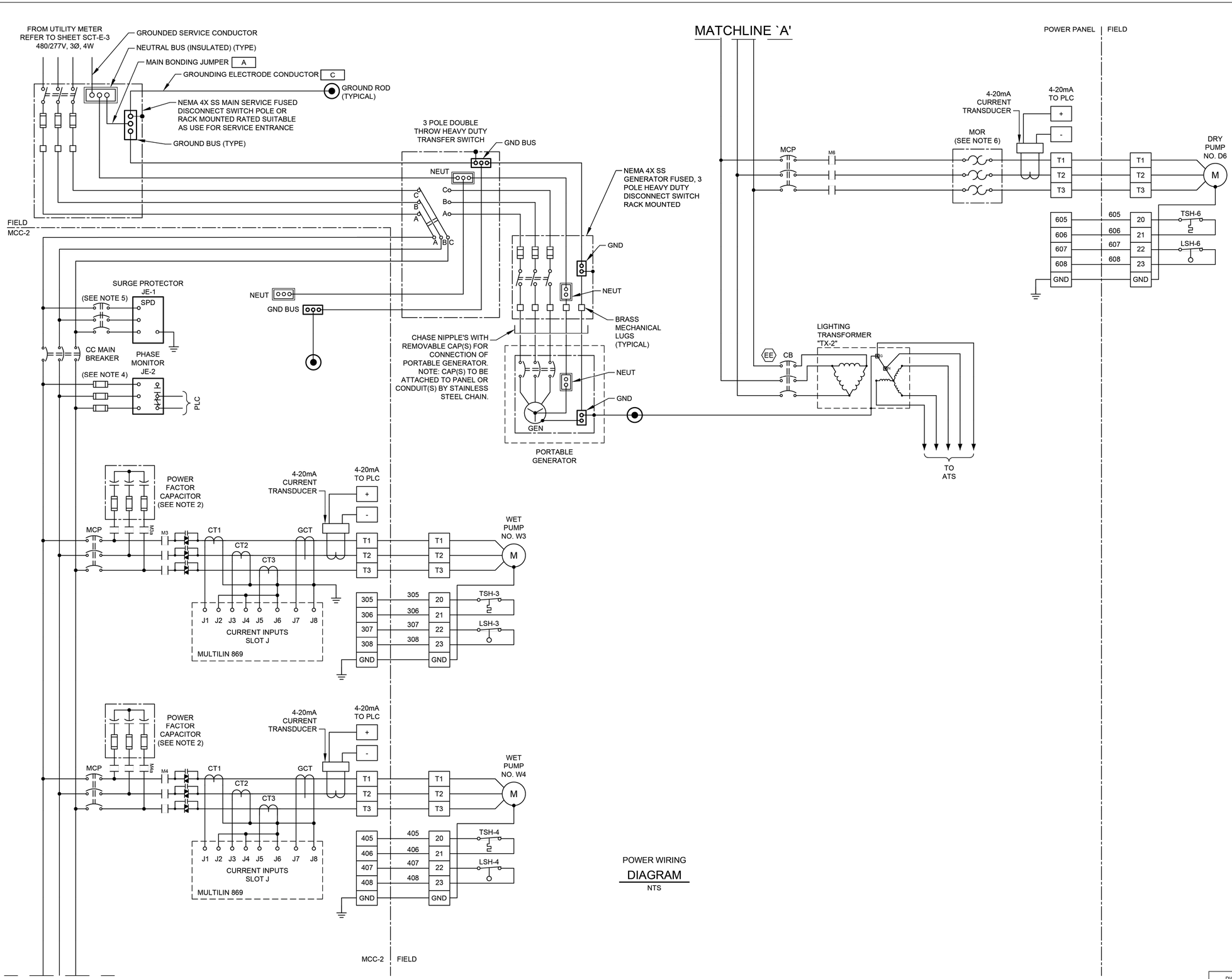

POWER WIRING DIAGRAM
NTS

FOR INTERIM REVIEW ONLY NOT INTENDED FOR PERMIT, BIDDING OR CONSTRUCTION PURPOSES.
ENGINEER:
HOSS FOROUZAN
P.E. SERIAL NO.77748
05/18/2026

GAI
Gupta & Associates, Inc.
CONSULTING ENGINEERING
Registration No. F-2593
302 Dennis St.,
Houston, Texas 77006
Tel: 713-636-2936
Fax: 713-636-2987
email: hforouzan@gaiconsulting.com

IDS Engineering Group
13430 NW. Freeway
Suite 700
Houston, Tx. 77040
713.462.3178
TxEng Firm 2726
TxSurv Firm 10110700

CITY OF HOUSTON
HOUSTON PUBLIC WORKS

LIFT STATION RENEWAL AND REPLACEMENT FY 2023

SCOTT NO.3 LIFT STATION MCC-2 THREE-LINE DIAGRAM

WBS NUMBER	FOR CITY OF HOUSTON USE ONLY
R-000267-0179-4	
DRAWING SCALE	
HORIZ: NONE VERT: NONE	
CITY OF HOUSTON PM	
NAWARAJ PANTA, P.E.	
DWG. NO. SCT-E-06	SHEET NO. 145 OF 361

NO.	DATE	REVISION	APP.

FILE PATH: O:\H8108_Lift Station Rehabilitation And Reconstruction (IDS)\6 Drawings\Electrical\Working\Scott #3\H8108_SCT-E-06.dwg

IDS JOB No. 0057-085-00

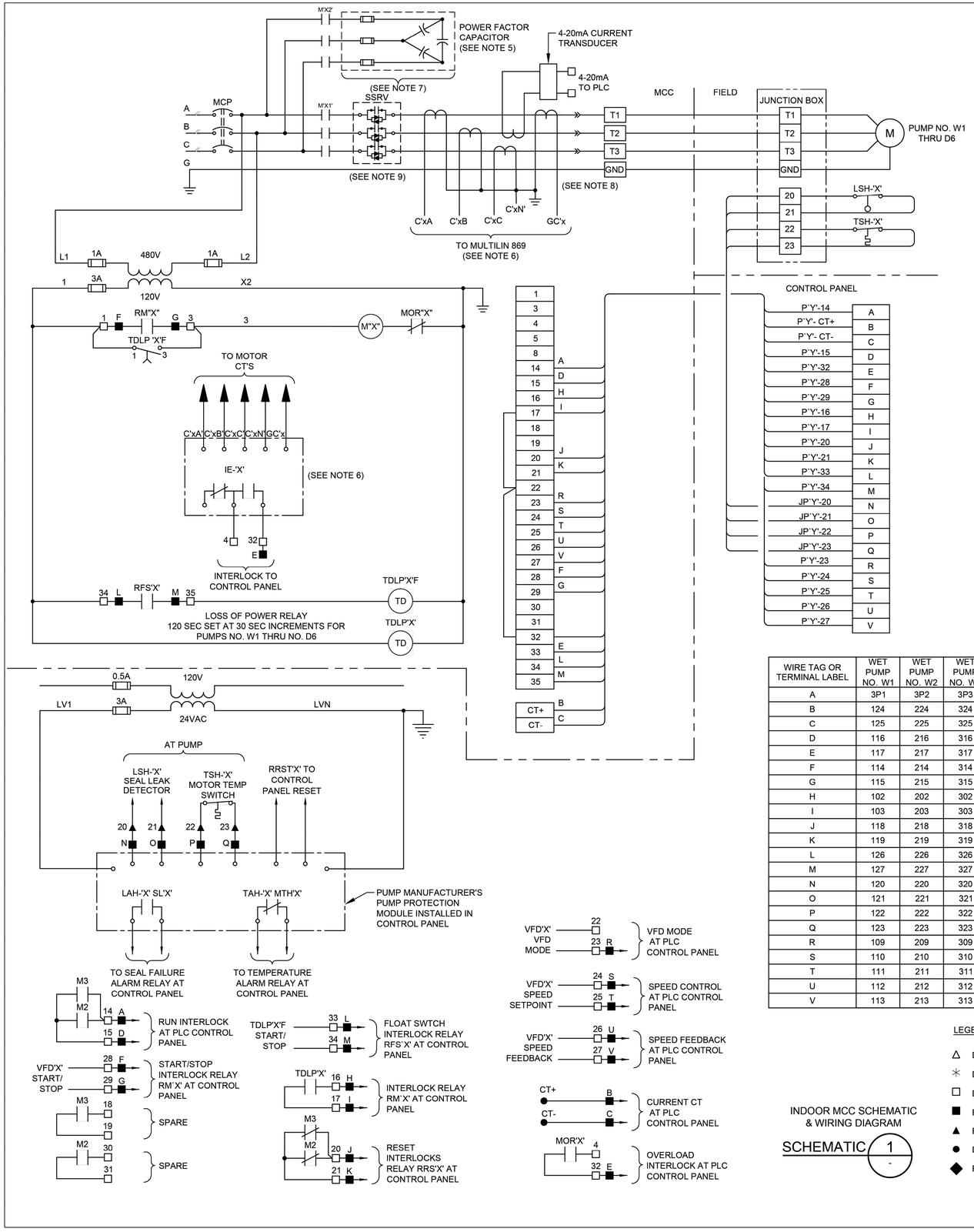

NOTES:

1. THE 'X' NOTATION IN SCHEMATIC DESIGNATIONS REPRESENTS APPLICABLE PUMP NO. W1, W2, W3, W4, D5, D6.
2. THE 'Y" NOTATION INDICATES MCC CIRCUIT NUMBER.
3. UNLESS OTHERWISE INDICATED, ALL DEVICES WITHOUT FURTHER DESIGNATION ARE LOCATED AT THE MOTOR CONTROL CENTER (MCC).
4. MOTOR OVERLOAD RELAY OUTPUT CONTACT SHOWN IS NORMALLY CLOSED WHEN RELAY IS DE-ENERGIZED. OPEN WHEN ENERGIZED, AND CLOSED WHEN IN ALARM. (VERIFY OPERATION OF RELAY PROVIDED AND ADJUST CONNECTION OF RMOR AUXILIARY RELAYS.)
5. CONTRACTOR TO COORDINATE POWER FACTOR CORRECTION CAPACITOR SIZE WITH PUMP MANUFACTURER.
6. FOR WET PUMPS NO.1 THRU NO.4, REFER TO SHEET E-XX FOR MULTILIN 869 MOTOR WIRING DIAGRAM.
7. NO PFCC INSTALLED FOR DRY PUMPS NO.5 AND 6.
8. NO GROUND CT INSTALLED FOR DRY PUMPS NO.5 AND 6.
9. NO SSRV INSTALLED FOR DRY PUMPS NO.5 AND 6.

WIRE TAG OR TERMINAL LABEL	WET PUMP NO. W1	WET PUMP NO. W2	WET PUMP NO. W3	WET PUMP NO. W4	DRY PUMP NO. D5	DRY PUMP NO. D6	FUNCTION
A	3P1	3P2	3P3	3P4	3P5	3P6	24VDC CONTROL
B	124	224	324	424	524	624	4-20mA CURRENT TRANSDUCER
C	125	225	325	425	525	625	4-20mA CURRENT TRANSDUCER
D	116	216	316	416	516	616	M CONTACT
E	117	217	317	417	517	617	OVERLOAD ALARM
F	114	214	314	414	514	614	RUN INTERLOCK
G	115	215	315	415	515	615	RUN INTERLOCK
H	102	202	302	402	502	602	LOSS OF POWER TIMER
I	103	203	303	403	503	603	LOSS OF POWER TIMER
J	118	218	318	418	518	618	ALARM RESET INTERLOCK
K	119	219	319	419	519	619	ALARM RESET INTERLOCK
L	126	226	326	426	526	626	FLOAT SWITCH RUN INTERLOCK
M	127	227	327	427	527	627	FLOAT SWITCH RUN INTERLOCK
N	120	220	320	420	520	620	SEAL LEAK DETECTOR
O	121	221	321	421	521	621	SEAL LEAK DETECTOR
P	122	222	322	422	522	622	MOTOR TEMPERATURE SWITCH
Q	123	223	323	423	523	623	MOTOR TEMPERATURE SWITCH
R	109	209	309	409	509	609	VFD MODE
S	110	210	310	410	510	610	4-20mA VFD SPEED CONTROL
T	111	211	311	411	511	611	4-20mA VFD SPEED CONTROL
U	112	212	312	412	512	612	4-20mA VFD SPEED INDICATION
V	113	213	313	413	513	613	4-20mA VFD SPEED INDICATION

INDOOR MCC SCHEMATIC & WIRING DIAGRAM

SCHEMATIC 1 / -

LEGEND

- △ DEVICE OR FIELD TERMINAL LOCATED AT MOTOR
- ✳ DEVICE OR FIELD TERMINAL LOCATED REMOTE
- □ DEVICE OR FIELD TERMINAL LOCATED AT POWER PANEL
- ■ FIELD TERMINAL LOCATED AT CONTROL PANEL
- ▲ REMOTE TERMINAL
- ● DEVICE TERMINAL NO.
- ◆ PC INTERFACE TERMINAL

NO.	DATE	REVISION	APP.

FOR INTERIM REVIEW
ONLY NOT INTENDED FOR
PERMIT, BIDDING OR
CONSTRUCTION PURPOSES.
ENGINEER:
HOSS FOROUZAN
P.E. SERIAL NO.77748
05/18/2026

GAI
Gupta & Associates, Inc
CONSULTING ENGINEERING
Registration No. F-2593
302 Dennis St.,
Houston, Texas 77006
Tel: 713-636-2936
Fax: 713-636-2987
email: hforouzan@gaiconsulting.com

IDS Engineering Group
13430 NW. Freeway
Suite 700
Houston, Tx. 77040
713.462.3178
TxEng Firm 2726
TxSurv Firm 10110700

CITY OF HOUSTON
HOUSTON PUBLIC WORKS

LIFT STATION RENEWAL AND REPLACEMENT FY 2023

SCOTT NO.3 LIFT STATION MCC SCHEMATIC & WIRING DIAGRAM

WBS NUMBER	FOR CITY OF HOUSTON USE ONLY
R-000267-0179-4	
DRAWING SCALE	
HORIZ: NONE VERT: NONE	
CITY OF HOUSTON PM	
NAWARAJ PANTA, P.E.	
DWG. NO. SCT-E-07	SHEET NO. 146 OF 361

IDS JOB No. 0057-085-00

PLOTTED: 5/12/2026 8:42 PM

FILE PATH: O:\H8108_Lift Station Rehabilitation And Reconstruction (IDS)\6 Drawings\Electrical\Working\Scott #3\H8108_SCT-E-07.dwg

PLOTTED: 5/12/2026 8:42 PM

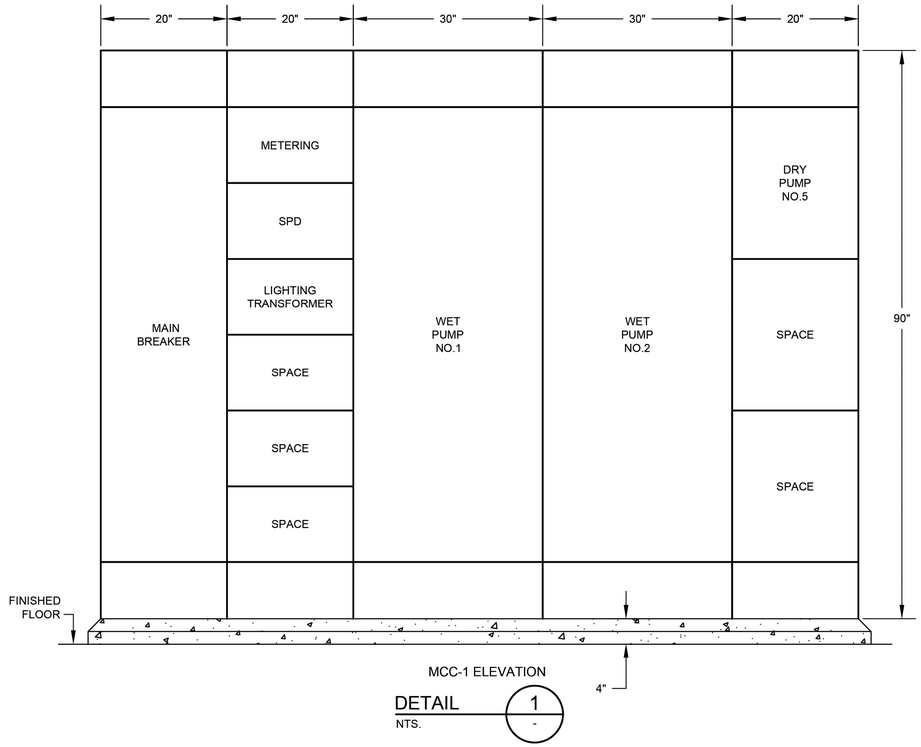

MCC-1 ELEVATION

DETAIL 1
NTS. -

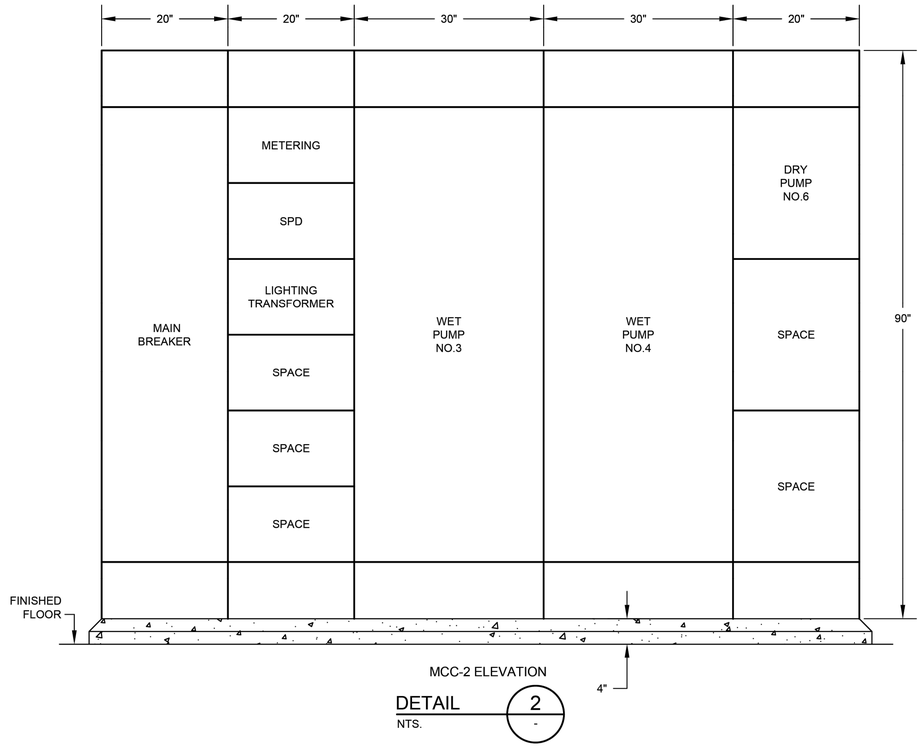

MCC-2 ELEVATION

DETAIL 2
NTS. -

NO.	DATE	REVISION	APP.

FOR INTERIM REVIEW
ONLY NOT INTENDED FOR
PERMIT, BIDDING OR
CONSTRUCTION PURPOSES.
ENGINEER:
HOSS FOROUZAN
P.E. SERIAL NO.77748
05/18/2026

GAI
Gupta & Associates, Inc.
CONSULTING ENGINEERING
Registration No. F-2593
302 Dennis St.,
Houston, Texas 77006
Tel: 713-636-2936
Fax: 713-636-2987
email: hforouzan@gaiconsulting.com

IDS Engineering Group
13430 NW. Freeway
Suite 700
Houston, Tx. 77040
713.462.3178
TxEng Firm 2726
TxSurv Firm 10110700

CITY OF HOUSTON
HOUSTON PUBLIC WORKS

LIFT STATION RENEWAL
AND REPLACEMENT FY 2023

SCOTT NO.3 LIFT STATION
MCC ELEVATION

WBS NUMBER	FOR CITY OF HOUSTON USE ONLY
R-000267-0179-4	
DRAWING SCALE	
HORIZ: NTS VERT: NTS	
CITY OF HOUSTON PM	
NAWARAJ PANTA, P.E.	
DWG. NO. SCT-E-08	SHEET NO. 147 OF 361

IDS JOB No. 0057-085-00

FILE PATH: O:\H8108_Lift Station Rehabilitation And Reconstruction (IDS)\6 Drawings\Electrical\Working\Scott #3\H8108_SCT-E-08.dwg

PLOTTED: 5/12/2026 8:42 PM

FILE PATH: O:\H8108_Lift Station Rehabilitation And Reconstruction (IDS)\6 Drawings\Electrical\Working\Scott #3\H8108_SCT-E-09.dwg

NOTES:

1. THERMO WELD BUILDING GROUND CONDUCTOR TO BUILDING REINFORCING STEEL.
2. BOND REBAR IN CONCRETE FOOTER TO GROUND ROD.
3. MULTILIN 869 COMMUNICATION CONDUIT ARE NOT SHOWN ON THE PLAN. REFER TO THE CABLE SCHEDULE FOR DETAIL

NO.	DATE	REVISION	APP.

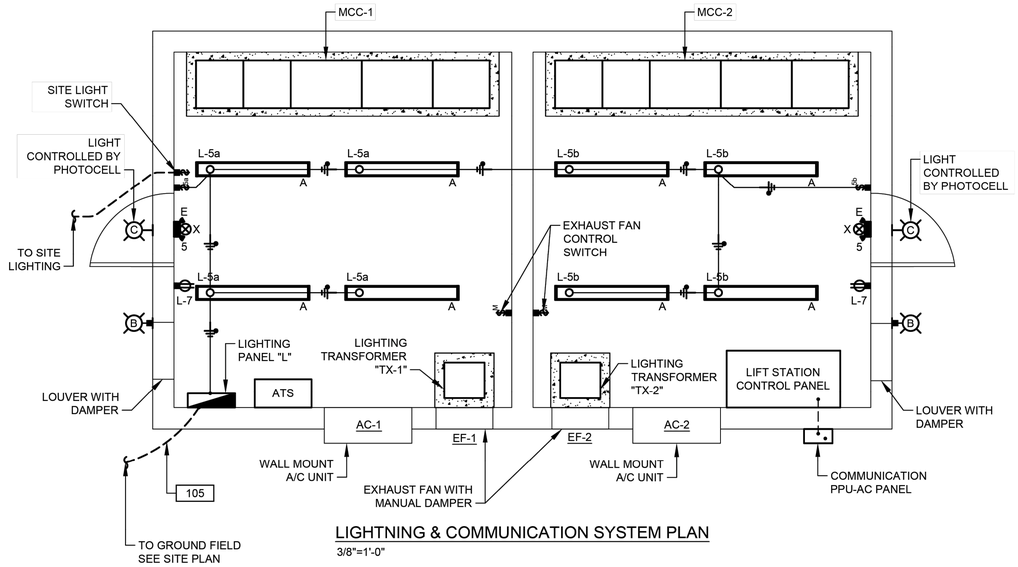

LIGHTNING & COMMUNICATION SYSTEM PLAN

3/8"=1'-0"

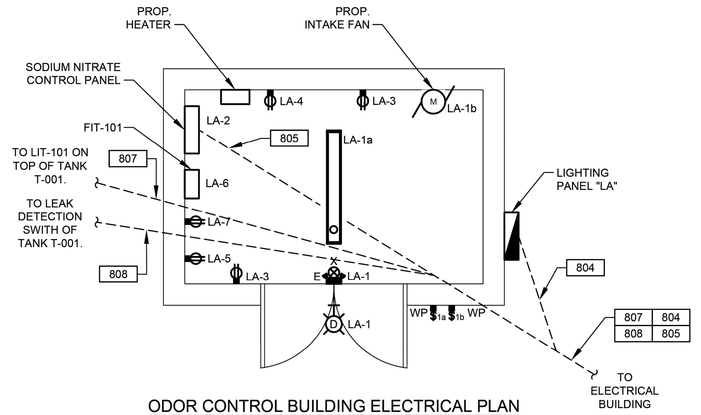

ODOR CONTROL BUILDING ELECTRICAL PLAN

1/2"=1'-0"

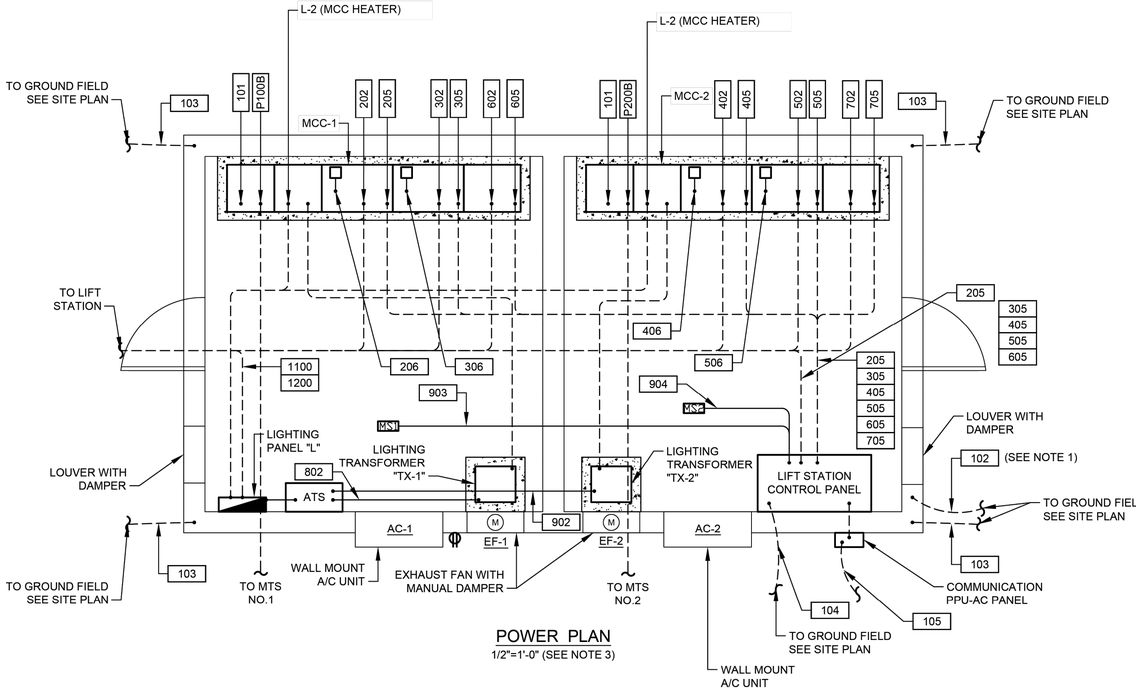

POWER PLAN

1/2"=1'-0" (SEE NOTE 3)

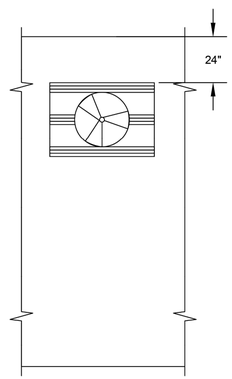

EXHAUST FAN

NTS.

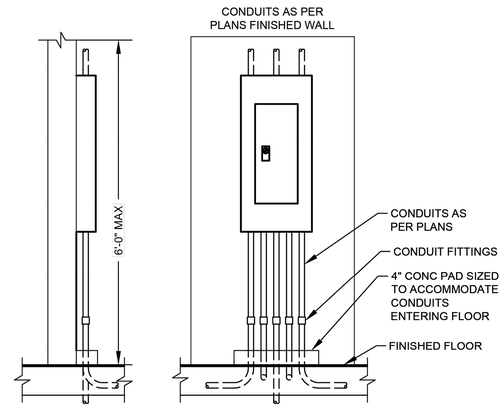

SIDE ELEVATION

FRONT ELEVATION

TYPICAL PANEL INSTALLATION

DETAIL -

NTS.

FOR INTERIM REVIEW ONLY NOT INTENDED FOR PERMIT, BIDDING OR CONSTRUCTION PURPOSES.
ENGINEER:
HOSS FOROUZAN
P.E. SERIAL NO.77748
05/18/2026

GAI
Gupta & Associates, Inc.
CONSULTING ENGINEERING
Registration No. F-2593
302 Dennis St.,
Houston, Texas 77006
Tel: 713-636-2936
Fax: 713-636-2987
email: hforouzan@gaiconsulting.com

IDS Engineering Group
13430 NW. Freeway
Suite 700
Houston, Tx. 77040
713.462.3178
TxEng Firm 2726
TxSurv Firm 10110700

CITY OF HOUSTON

HOUSTON PUBLIC WORKS

LIFT STATION RENEWAL AND REPLACEMENT FY 2023

SCOTT NO.3 LIFT STATION CONTROL BUILDING PLAN

WBS NUMBER	FOR CITY OF HOUSTON USE ONLY
R-000267-0179-4	
DRAWING SCALE	
HORIZ AS SHOWN VERT AS SHOWN	
CITY OF HOUSTON PM	
NAWARAJ PANTA, P.E.	
DWG. NO. SCT-E-09	SHEET NO. 148 OF 361

IDS JOB No. 0057-085-00

PLOTTED: 5/12/2026 8:42 PM

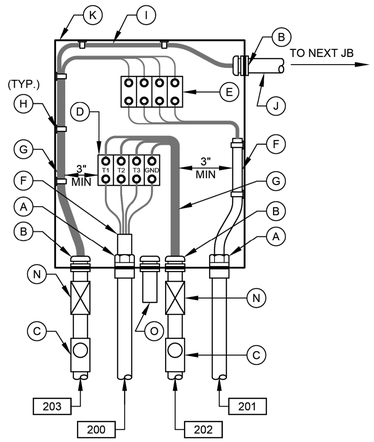

PUMP NO.1
JUNCTION BOX

DETAIL 3
NTS
(SEE NOTE 7)

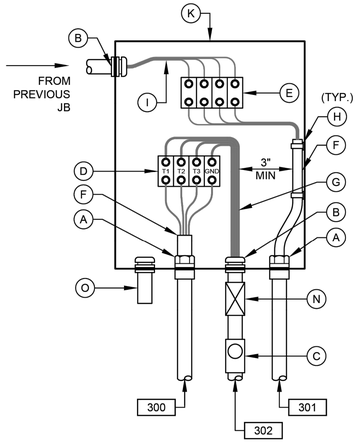

PUMP NO.2
JUNCTION BOX

DETAIL 4
NTS
(SEE NOTE 7)

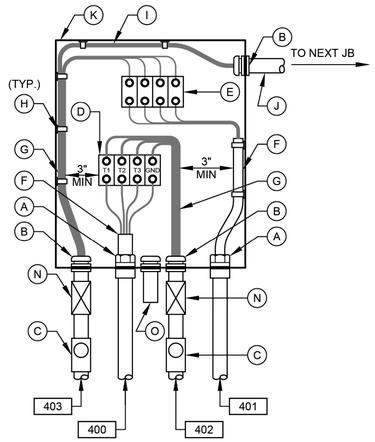

PUMP NO.3
JUNCTION BOX

DETAIL 5
NTS
(SEE NOTE 7)

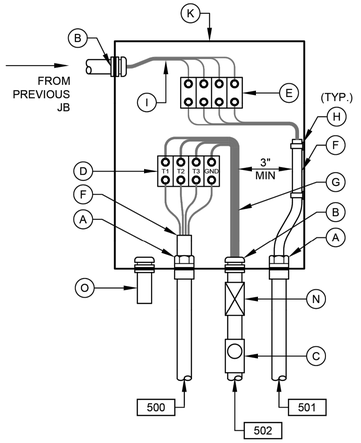

PUMP NO.4
JUNCTION BOX

DETAIL 6
NTS
(SEE NOTE 7)

NOTES:

1. NAMEPLATES SHALL BE MOUNTED TO JUNCTION BOXES USING 316 STAINLESS STEEL HARDWARE.
2. MAINTAIN MINIMUM SEPARATION REQUIRED UNDER NEC ARTICLE 504, BETWEEN INTRINSICALLY SAFE CONTROL WIRING AND NON INTRINSICALLY SAFE MOTOR FEEDER WIRING.
3. UNLESS OTHERWISE NOTED, ALL EXTERIOR EXPOSED CONDUITS SHALL BE PVC COATED ALUMINUM.
4. UNLESS OTHERWISE NOTED, ALL NUTS, BOLTS, SCREWS WASHERS, ETC SHALL BE TYPE 316 STAINLESS STEEL.
5. ALL UNDERGROUND CONDUITS TO BE ENCASED IN REINFORCED CONCRETE DUCTBANK.
6. PROVIDE ANTI-CORROSIVE SPRAY ON ANY BARE METAL PARTS OR EXPOSED WIRE.
7. SEE WIRING SCHEMATICS FOR TERMINALS AND WIRE NUMBERS.
8. ANY CONDUIT REQUIRING A CSBE SEAL, SHALL BE A MINIMUM SIZE OF 2 1/2" PER CABLE.
9. DETAIL SHOWN MAY BE MODIFIED PER SITE SITUATION.
10. COORDINATE WITH WASTE WATER OPERATIONS ELECTRICAL ORGANIZATION FOR THE OPENING OF JUNCTION BOXES TO THE SIDE OF WET WELL IF REQUIRED DURING CONSTRUCTION.
11. THE ENCLOSURES WITH ELECTRICAL CIRCUITS SHALL BE A MINIMUM OF 5 FEET FROM ANY CLASSIFIED AREA, OTHERWISE EXPLOSION PROOF TYPE ENCLOSURES SHALL BE USED.
12. THE RECEPTACLES SHALL BE EXPLOSION PROOF TYPE IF INSTALLED WITHIN 5 FEET OF CLASSIFIED AREA, SHALL BE FIELD VERIFIED.

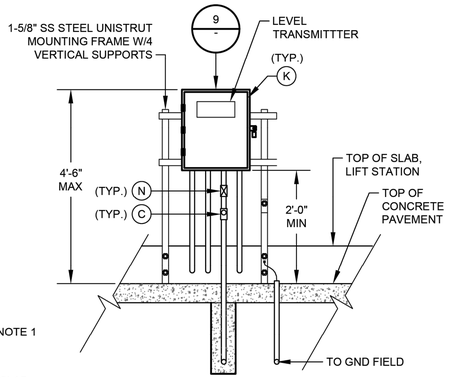

DETAIL 10
NTS
(SEE NOTE 9)

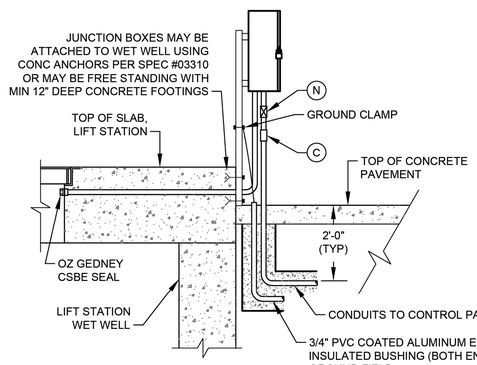

TYP SIDE VIEW FOR DETAIL 1, 1A, 2, 2A & 10

(SEE NOTE 10)

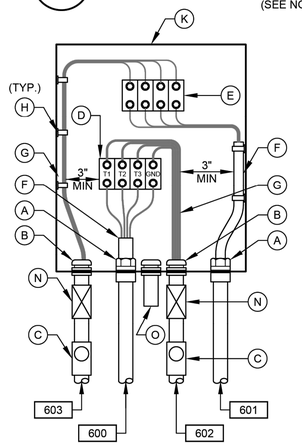

PUMP NO.5
JUNCTION BOX

DETAIL 7
NTS
(SEE NOTE 7)

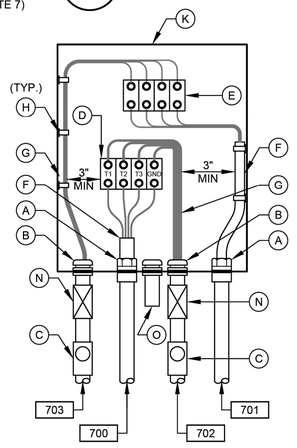

PUMP NO.6
JUNCTION BOX

DETAIL 8
NTS
(SEE NOTE 7)

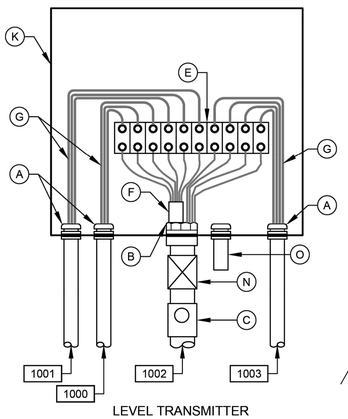

LEVEL TRANSMITTER
JUNCTION BOX

DETAIL 9
NTS
(SEE NOTE 7)

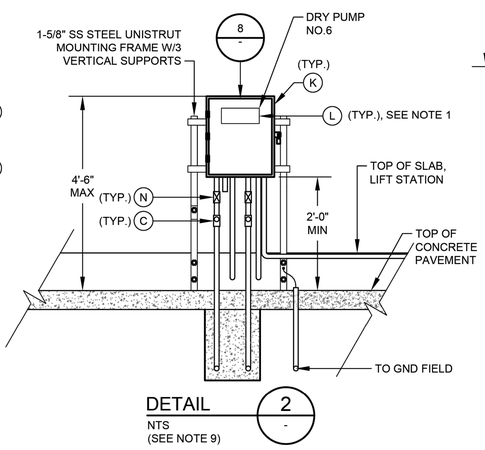

DETAIL 2
NTS
(SEE NOTE 9)

JUNCTION BOX EQUIPMENT SCHEDULE

- A - OZ GEDNEY CSBE SEAL
- B - WATERTIGHT CONDUIT HUB WITH INSULATED BUSHING
- C - CLASS I, DIV 1, EXPLOSION PROOF SEAL INSTALLED PER NEC DIV 501
- D - POWER TERMINAL BLOCK W/SCREW DOWN BOX LUGS
- E - CONTROL TERM BLOCK W/SCREW DOWN BOX LUGS
- F - MULTI-CONDUCTOR CABLE, REMOVE OUTER JACKET AS SHOWN
- G - WIRING AS SCHEDULED
- H - WIRING HARNESS PERMANENTLY AFFIXED
- I - PUMP CONTROL WIRING FROM PUMPS 2; 2 & 3; 4; OR D2, AS APPLICABLE
- J - 1 1/2" PVC COATED CONDUIT NIPPLE
- K - NEMA 4X STAINLESS STEEL JUNCTION BOX WITH GASKETED FRONT COVER, SINGLE QUARTER TURN, OIL-TIGHT LATCH AND PADLOCKING PROVISIONS, HOFFMAN D-3L16H1206 SS LF OR EQUAL. MINIMUM SIZE: 12"W X 16"H X 6"D
- L - NAMEPLATE, SEE SPECIFICATIONES (SEE NAMEPLATE SCHEDULE)
- M - MOTOR RATED SWITCH
- N - EXPANSION FITTING
- O - DRAIN VENT

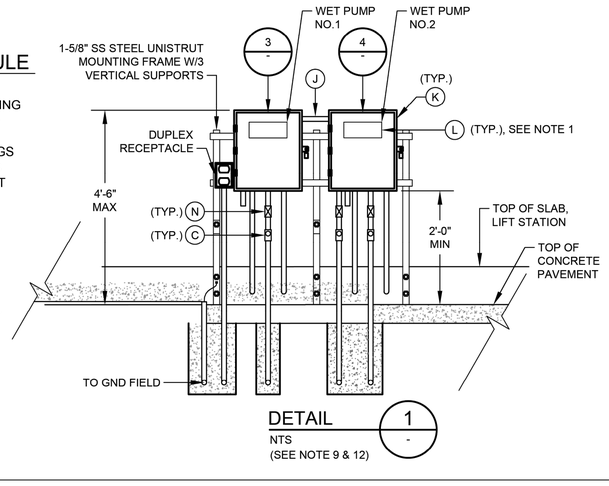

DETAIL 1
NTS
(SEE NOTE 9 & 12)

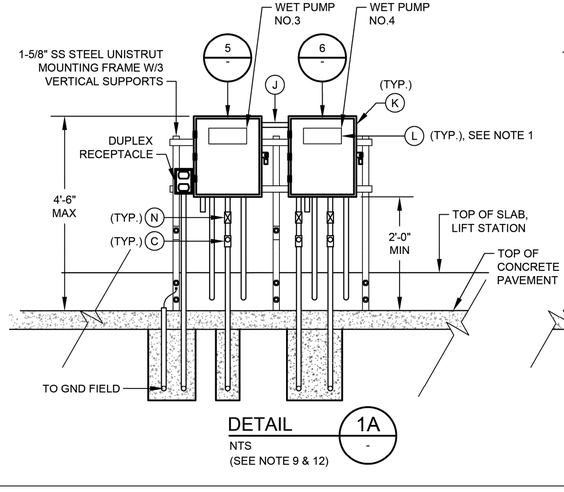

DETAIL 1A
NTS
(SEE NOTE 9 & 12)

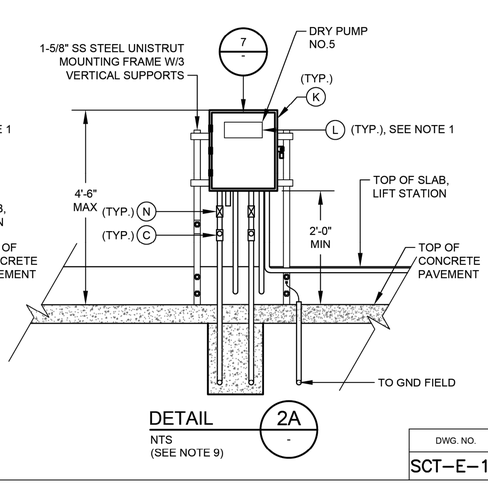

DETAIL 2A
NTS
(SEE NOTE 9)

NO.	DATE	REVISION	APP.

FOR INTERIM REVIEW
ONLY NOT INTENDED FOR
PERMIT, BIDDING OR
CONSTRUCTION PURPOSES.
ENGINEER:
HOSS FOROUZAN
P.E. SERIAL NO.77748
05/18/2026

GAI
Gupta & Associates, Inc.
CONSULTING ENGINEERING
Registration No. F-2593
302 Dennis St.,
Houston, Texas 77006
Tel: 713-636-2936
Fax: 713-636-2987
email: hforouzan@gaiconsulting.com

IDS Engineering Group
13430 NW. Freeway
Suite 700
Houston, Tx. 77040
713.462.3178
TxEng Firm 2726
TxSurv Firm 10110700

CITY OF HOUSTON
HOUSTON PUBLIC WORKS

LIFT STATION RENEWAL
AND REPLACEMENT FY 2023

SCOTT NO.3 LIFT STATION JUNCTION BOX DETAILS

WBS NUMBER	FOR CITY OF HOUSTON USE ONLY
R-000267-0179-4	
DRAWING SCALE	
HORIZ: NTS VERT: NTS	
CITY OF HOUSTON PM	
NAWARAJ PANTA, P.E.	
DWG. NO. SCT-E-10	SHEET NO. 149 OF 361

IDS JOB No. 0057-085-00

FILE PATH: O:\H8108_Lift Station Rehabilitation And Reconstruction (IDS)\6 Drawings\Electrical\Working\Scott #3\H8108_SCT-E-10.dwg

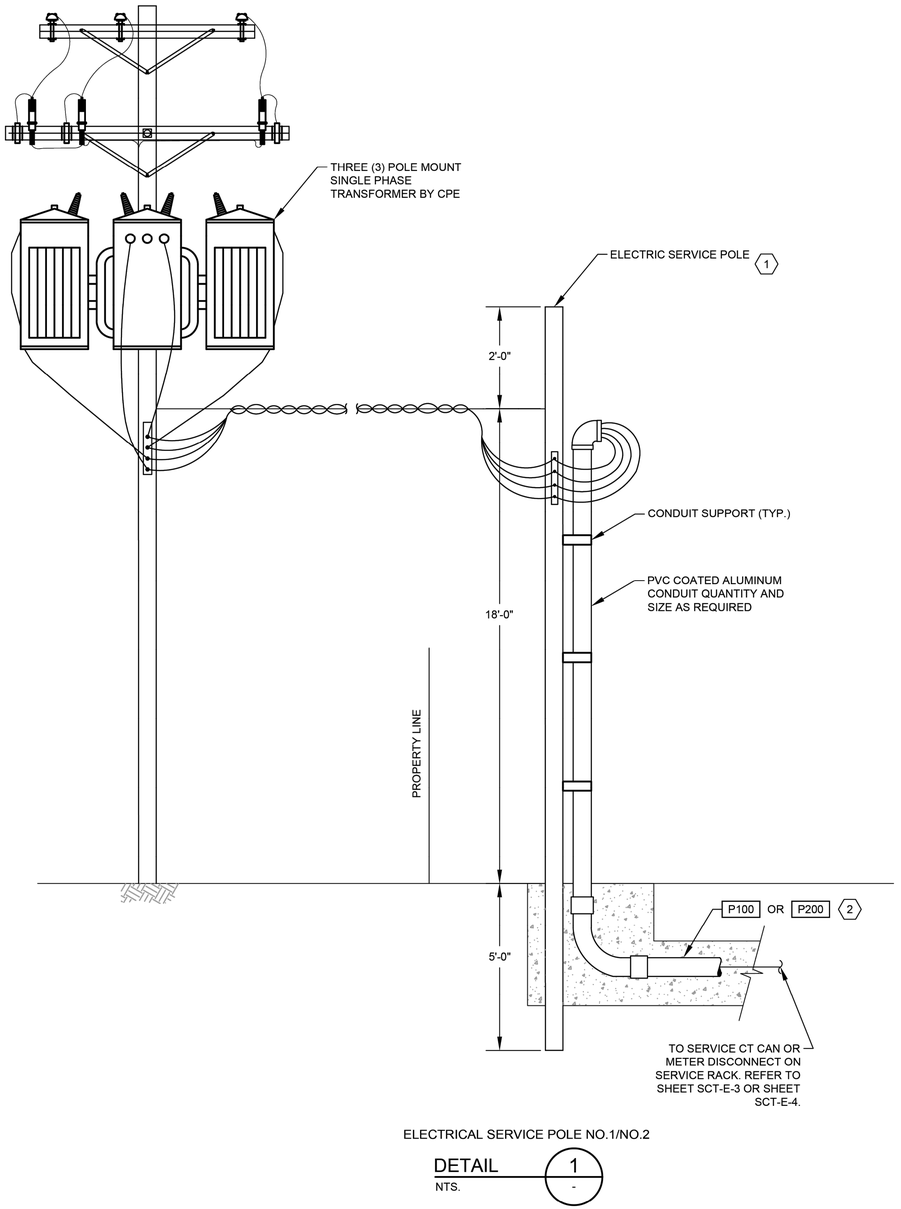

ELECTRICAL SERVICE POLE NO.1/NO.2

DETAIL 1 / NTS. -

NOTES BY SYMBOL "#":

1. WOODEN POLE 20' LONG. TOP DIAMETER 6" BOTTOM DIAMETER 8" PROVIDED AND INSTALLED BY ELECTRICAL CONTRACTOR.
2. ELECTRICAL SERVICE FEEDER PROVIDED AND INSTALLED BY ELECTRICAL CONTRACTOR. COORDINATE WITH CPE FOR THE REQUIREMENTS OF THE INSTALLATION.

NO.	DATE	REVISION	APP.

FOR INTERIM REVIEW
ONLY NOT INTENDED FOR
PERMIT, BIDDING OR
CONSTRUCTION PURPOSES.
ENGINEER:
HOSS FOROUZAN
P.E. SERIAL NO.77748
05/18/2026

GAI
Gupta & Associates, Inc.
CONSULTING ENGINEERING
Registration No. F-2593
302 Dennis St.,
Houston, Texas 77006
Tel: 713-636-2936
Fax: 713-636-2987
email: hforouzan@gaiconsulting.com

IDS Engineering Group
13430 NW. Freeway
Suite 700
Houston, Tx. 77040
713.462.3178
TxEng Firm 2726
TxSurv Firm 10110700

CITY OF HOUSTON
HOUSTON PUBLIC WORKS

LIFT STATION RENEWAL
AND REPLACEMENT FY 2023

SCOTT NO.3 LIFT STATION SERVICE POLE DETAIL

WBS NUMBER	FOR CITY OF HOUSTON USE ONLY
R-000267-0179-4	
DRAWING SCALE	
HORIZ: NTS VERT: NTS	
CITY OF HOUSTON PM	
NAWARAJ PANTA, P.E.	
SHEET NO. 150 OF 361	

DWG. NO. SCT-E-11

IDS JOB No. 0057-085-00

PLOTTED: 5/12/2026 8:42 PM

FILE PATH: O:\H8108_Lift Station Rehabilitation And Reconstruction (IDS)\6 Drawings\Electrical\Working\Scott #3\H8108_SCT-E-11.dwg

PLOTTED: 5/12/2026 8:43 PM

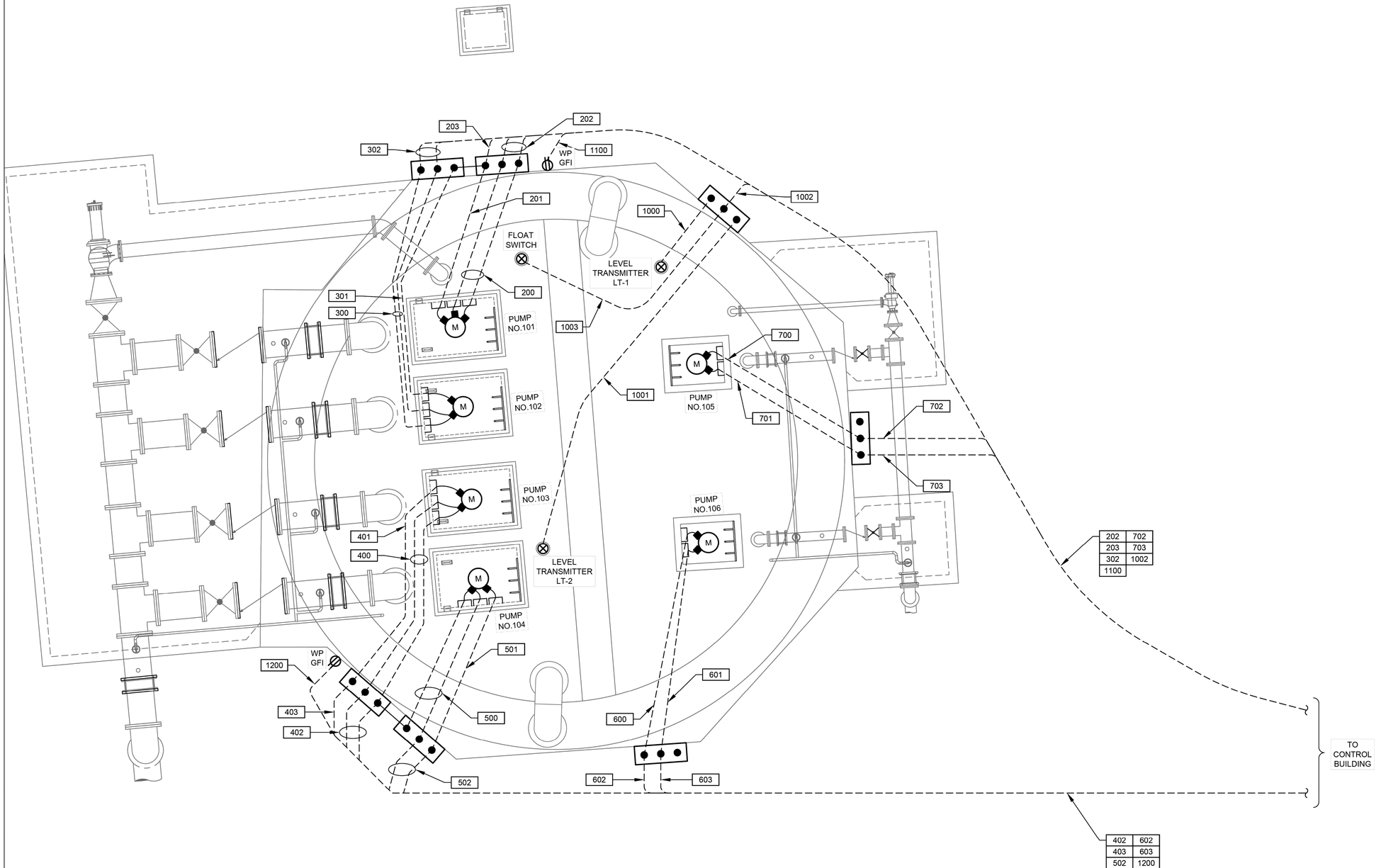

SCOTT NO.3 LIFT STATION
ENLARGED PLAN

PLAN

1/4"=1'-0"

2 0 6

SCALE: 1/4" = 1'-0"

NO.	DATE	REVISION	APP.

FOR INTERIM REVIEW
ONLY NOT INTENDED FOR
PERMIT, BIDDING OR
CONSTRUCTION PURPOSES.
ENGINEER:
HOSS FOROUZAN
P.E. SERIAL NO.77748
05/18/2026

GAI
Gupta & Associates, Inc.
CONSULTING ENGINEERING
Registration No. F-2593
302 Dennis St.,
Houston, Texas 77006
Tel: 713-636-2936
Fax: 713-636-2987
email: hforouzan@gaiconsulting.com

IDS Engineering Group
13430 NW. Freeway
Suite 700
Houston, Tx. 77040
713.462.3178
TxEng Firm 2726
TxSurv Firm 10110700

CITY OF HOUSTON
HOUSTON PUBLIC WORKS

LIFT STATION RENEWAL
AND REPLACEMENT FY 2023

SCOTT NO.3 LIFT STATION ENLARGED PLAN VIEW

WBS NUMBER	FOR CITY OF HOUSTON USE ONLY
R-000267-0179-4	
DRAWING SCALE	
HORIZ. 1/4"=1'-0" VERT. 1/4"=1'-0"	
CITY OF HOUSTON PM	
NAWARAJ PANTA, P.E.	
SHEET NO. 151 OF 361	

DWG. NO.
SCT-E-12

IDS JOB No. 0057-085-00

FILE PATH: O:\H8108_Lift Station Rehabilitation And Reconstruction (IDS)\6 Drawings\Electrical\Working\Scott #3\H8108_SCT-E-12.dwg

	DESCRIPTION	SERVICE		ROUTING			CONDUIT & WIRE SIZE
		VOLTAGE	AMPS OR HP	FROM	TO	VIA	
A	MAIN BONDING JUMPER	--	--	MAIN FUSED DISCONNECT NEUTRAL	MAIN FUSED DISCONNECT GROUND	--	#1/0 GND.
B	EQUIPMENT BONDING JUMPER	--	--	MCC/POWER PANEL ENCLOSURE	POWER/CONTROL PANEL & EQUIPMENT GROUNDING	--	#1/0 GND.
C	GROUNDED ELECTRODE CONDUCTOR	--	--	GROUNDING ELECTRODE	MAIN SERVICE FUSED DISCONNECT	--	#1/0 GND.
P100	SERVICE ENTRANCE NO.1	480V	--	UTILITY POWER SERVICE POLE NO.1	CT CAN NO.1	--	2 SETS OF 3#500 MCM, #1/0 NEUT., #1/0 GND., 3-1/2"C.
P100A	SERVICE POWER NO.1	480V	--	SERVICE DISCONNECT NO.1	MANUAL TRANSFER SWITCH NO.1	--	2 SETS OF 3#500 MCM, #1/0 NEUT., #1/0 GND., 3-1/2"C.
P100B	MCC-1 SERVICE POWER	480V	--	MANUAL TRANSFER SWITCH NO.1	MCC BREAKER IN MCC-1	--	2 SETS OF 3#500 MCM, #1/0 NEUT., #1/0 GND., 3-1/2"C.
P100C	NORMAL/EMERGENCY POWER STATUS NO.1	24VDC	--	MANUAL TRANSFER SWITCH NO.1	CONTROL PANEL	--	4#14 AWG., 1" C.
P200	SERVICE ENTRANCE NO.2	480V	--	UTILITY POWER SERVICE POLE NO.2	CT CAN NO.2		2 SETS OF 3#500 MCM, #1/0 NEUT., #1/0 GND., 3-1/2"C.
P200A	SERVICE POWER NO.2	480V	--	SERVICE DISCONNECT NO.2	MANUAL TRANSFER SWITCH NO.2		2 SETS OF 3#500 MCM, #1/0 NEUT., #1/0 GND., 3-1/2"C.
P200B	MCC-2 SERVICE POWER	480V	--	MANUAL TRANSFER SWITCH NO.2	MCC BREAKER IN MCC-2		2 SETS OF 3#500 MCM, #1/0 NEUT., #1/0 GND., 3-1/2"C.
P200C	NORMAL/EMERGENCY POWER STATUS NO.2	24VDC	--	MANUAL TRANSFER SWITCH NO.2	CONTROL PANEL		4#14 AWG., 1" C.
P200D	EMERGENCY POWER NO.2	480V	--	GENERATOR DISCONNECT NO.2	MANUAL TRANSFER SWITCH NO.2		2 SETS OF 3#500 MCM, #1/0 NEUT., #1/0 GND., 3-1/2"C.
101	GROUND ELECTRODE CONDUCTOR	--	--	MCC GROUND BUS	GROUND FIELD	--	#4/0 GND.
102	GROUND ELECTRODE CONDUCTOR	--	--	BUILDING STEEL	GROUND FIELD	--	#4/0 GND.
103	BUILDING GROUNDING	--	--	BUILDING REBAR	GROUND ROD	--	#4/0 GND.
104	GROUND ELECTRODE CONDUCTOR	--	--	CONTROL PANEL	GROUND FIELD	--	2/0 GND.
105	COMMUNICATION	--	--	COMMUNICATION POLE	CONTROL PANEL	--	1-1/2"C. CAT-5E
200	PUMP NO.101 POWER	480V	215 HP	PUMP NO.101	PUMP NO.101 JUNCTION BOX	--	MANUFACTURER CABLE IN 4"C.
201	PUMP NO.101 CONTROLS	120V	--	PUMP NO.101	PUMP NO.101 JUNCTION BOX	--	MANUFACTURER CABLE IN 2-1/2"C.
202	PUMP NO.101 POWER	480V	215 HP	PUMP NO.101 JUNCTION BOX	PUMP STARTER	--	2 SETS OF 350MCM, #3 GND., 3"C. EA.
203	COMBINED PUMP CONTROLS	120V	--	PUMP NO.101 JUNCTION BOX	CONTROL PANEL	--	COMBINE 200 & 300 WIRING, 10#14 1"C.
204	MULTIN 869 COMMUNICATION	24VDC	--	MULTIN 869 FOR PUMP NO. 101	CONTROL PANEL	--	CAT. 5E, 3/4" C.
205	PUMP NO.101 CONTROLS	120V	--	STARTER IN MOTOR CONTROL CENTER "MCC-1"	CONTROL PANEL	--	20#14, 1PR.#16, 1-1/2" C.
206	PUMP NO.101 CAPACITOR	480V	TBD	PUMP NO.101 MOTOR STARTER	POWER FACTOR CORRECTION CAPACITOR	--	3#1, #6 GND., 2"C.
300	PUMP NO.102 POWER	480V	215 HP	PUMP NO.102	PUMP NO.102 JUNCTION BOX	--	MANUFACTURER CABLE IN 4"C.
301	PUMP NO.102 CONTROLS	120V	--	PUMP NO.102	PUMP NO.102 JUNCTION BOX	--	MANUFACTURER CABLE IN 2-1/2"C.
302	PUMP NO.102 POWER	480V	215 HP	PUMP NO. 102 JUNCTION BOX	PUMP STARTER	--	2 SETS OF 350MCM., #3 GND., 3"C. EA.
304	MULTIN 869 COMMUNICATION	24VDC	--	MULTIN 869 FOR PUMP NO. 102	CONTROL PANEL	--	CAT. 5E, 3/4" C.
305	PUMP NO.102 CONTROLS	120V	--	STARTER IN MOTOR CONTROL CENTER "MCC-1"	CONTROL PANEL	--	20#14, 1PR.#16, 1-1/2" C.
306	PUMP NO.102 CAPACITOR	480V	TBD	PUMP NO. 102 MOTOR STARTER	POWER FACTOR CORRECTION CAPACITOR	--	3#1, #6 GND., 2"C.
400	PUMP NO. 103 POWER	480V	215 HP	PUMP NO. 103	PUMP NO.103 JUNCTION BOX	--	MANUFACTURER CABLE IN 4"C.
401	PUMP NO. 103 CONTROLS	120V	--	PUMP NO. 103	PUMP NO.103 JUNCTION BOX	--	MANUFACTURER CABLE IN 2-1/2"C.
402	PUMP NO. 103 POWER	480V	215 HP	PUMP NO. 103 JUNCTION BOX	PUMP STARTER	--	2 SETS OF 350MCM, #3 GND., 3"C. EA.
403	COMBINED PUMP CONTROLS	120V	--	PUMP NO. 103 JUNCTION BOX	CONTROL PANEL	--	COMBINE 400 & 500 WIRING, 10#14 1"C.
404	MULTIN 869 COMMUNICATION	24VDC	--	MULTIN 869 FOR PUMP NO. 103	CONTROL PANEL	--	CAT. 5E, 3/4" C.
405	PUMP NO.103 CONTROLS	120V	--	STARTER IN MOTOR CONTROL CENTER "MCC-1"	CONTROL PANEL	--	20#14, 1PR.#16, 1-1/2" C.
406	PUMP NO.103 CAPACITOR	480V	TBD	PUMP NO. 103 MOTOR STARTER	POWER FACTOR CORRECTION CAPACITOR	--	3#1, #6 GND., 2"C.
500	PUMP NO.104 POWER	480V	215 HP	PUMP NO. 104	PUMP NO.104 JUNCTION BOX	--	MANUFACTURER CABLE IN 4"C.
501	PUMP NO.104 CONTROLS	120V	--	PUMP NO. 104	PUMP NO.104 JUNCTION BOX	--	MANUFACTURER CABLE IN 2-1/2"C.
502	PUMP NO.104 POWER	480V	215 HP	PUMP NO. 104 JUNCTION BOX	PUMP STARTER	--	2 SETS OF 350MCM, #3 GND., 3"C. EA.
504	MULTIN 869 COMMUNICATION	24VDC	--	MULTIN 869 FOR PUMP NO. 104	CONTROL PANEL	--	CAT. 5E, 3/4" C.
505	PUMP NO.104 CONTROLS	120V	--	STARTER IN MOTOR CONTROL CENTER "MCC-2"	CONTROL PANEL	--	20#14, 1PR.#16, 1-1/2" C.
506	PUMP NO.104 CAPACITOR	480V	TBD	PUMP NO. 104 MOTOR STARTER	POWER FACTOR CORRECTION CAPACITOR	--	3#1, #6 GND., 2"C.
600	PUMP NO.105 POWER	480V	30 HP	PUMP NO. 105	PUMP NO.105 JUNCTION BOX	--	MANUFACTURER CABLE IN 2-1/2"C.
601	PUMP NO.105 CONTROLS	120V	--	PUMP NO. 105	PUMP NO.105 JUNCTION BOX	--	MANUFACTURER CABLE IN 2-1/2"C.
602	PUMP NO.105 POWER	480V	30 HP	PUMP NO. 105 JUNCTION BOX	PUMP STARTER	--	3#4, #8 GND., 1-1/2"C.
603	PUMP NO.105 CONTROLS	120V	--	PUMP NO. 105 JUNCTION BOX	PUMP STARTER	--	5#14, 1"C.
605	PUMP NO.105 CONTROLS	120V	--	STARTER IN MOTOR CONTROL CENTER "MCC-1"	CONTROL PANEL	--	20#14, 1PR.#16, 1-1/2" C.
700	PUMP NO.106 POWER	480V	30 HP	PUMP NO. 106	PUMP NO.102 JUNCTION BOX	--	MANUFACTURER CABLE IN 2-1/2"C.
701	PUMP NO.106 CONTROLS	120V	--	PUMP NO. 106	PUMP NO.102 JUNCTION BOX	--	MANUFACTURER CABLE IN 2-1/2"C.
702	PUMP NO.106 POWER	480V	30 HP	PUMP NO. 106 JUNCTION BOX	PUMP STARTER	--	3#4, #8 GND., 1-1/2"C.
703	PUMP NO.106 CONTROLS	120V	--	PUMP NO. 106 JUNCTION BOX	PUMP STARTER	--	5#14, 1"C.
705	PUMP NO.106 CONTROLS	120V	--	STARTER IN MOTOR CONTROL CENTER "MCC-2"	CONTROL PANEL	--	20#14, 1PR.#16, 1-1/2" C.
800	LIGHTING TRANSFORMER FEEDER "TX-1"	480V	50A	MOTOR CONTROL CENTER "MCC-1"	LIGHTING TRANSFORMER	--	3#6 AWG., #8 GND., 3/4" C.
801	LIGHTING TRANSFORMER GROUND "TX-1"	--	--	LIGHTING TRANSFORMER "TX-1"	GROUND FIELD	--	#6 GND., 1" C.
802	ATS INPUT, SOURCE 1	120/208V	100A	LIGHTING TRANSFORMER "TX-1"	ATS	--	4#3 AWG., #6 GND., 1-1/2" C.
803	LIGHTING PANEL FEEDER	120/208V	100A	ATS	LIGHTING PANEL "L"	--	4#3 AWG., #6 GND., 1-1/2" C.

NO.	DATE	REVISION	APP.

FOR INTERIM REVIEW
ONLY NOT INTENDED FOR
PERMIT, BIDDING OR
CONSTRUCTION PURPOSES.
ENGINEER:
HOSS FOROUZAN
P.E. SERIAL NO.77748
05/18/2026

GAI
Gupta & Associates, Inc.
CONSULTING ENGINEERING
Registration No. F-2593
302 Dennis St.,
Houston, Texas 77006
Tel: 713-636-2936
Fax: 713-636-2987
email: hforouzan@gaiconsulting.com

IDS Engineering Group
13430 NW. Freeway
Suite 700
Houston, Tx. 77040
713.462.3178
TxEng Firm 2726
TxSurv Firm 10110700

CITY OF HOUSTON
HOUSTON PUBLIC WORKS

LIFT STATION RENEWAL
AND REPLACEMENT FY 2023

SCOTT NO.3 LIFT STATION CONDUIT SCHEDULE–I

WBS NUMBER	FOR CITY OF HOUSTON USE ONLY
R–000267–0179–4	
DRAWING SCALE	
HORIZ: NONE VERT: NONE	
CITY OF HOUSTON PM	
NAWARAJ PANTA, P.E.	
SHEET NO. 152 OF 361	

DWG. NO. SCT–E–13

IDS JOB No. 0057-085-00

PLOTTED: 5/12/2026 8:43 PM

FILE PATH: O:\H8108_Lift Station Rehabilitation And Reconstruction (IDS)\6 Drawings\Electrical\Working\Scott #3\H8108_SCT–E–13.dwg

	DESCRIPTION	SERVICE		ROUTING			CONDUIT & WIRE SIZE
		VOLTAGE	AMPS OR HP	FROM	TO	VIA	
804	LIGHTING PANEL "LA" FEEDER	120/240V	40A	LIGHTING PANEL "L"	LIGHTING PANEL "LA"	--	3#6 AWG., #8 GND., 1" C.
805	ODOR CONTROLS	24VDC	--	CONTROL PANEL	SODIUM NITRATE CONTROL PANEL	--	18#14 AWG., 5-TRI #16 AWG., 2" C.
806	FLOW METER POWER	120VAC	--	LIGHTING PANEL "LA"	FIT-101	--	2#12 AWG., #12 GND., 3/4" C.
807	LEVEL TRANSMITTER LIT-101	24VDC	--	CONTROL PANEL	LIT-101	--	1-TRI #16 AWG.,1" C.
808	TANK LEAK DETECTION	24VDC	--	SODIUM NITRATE CONTROL PANEL	LEAK DETECTION SWITCH	--	2#14 AWG., #14 GND., 1"C.
900	LIGHTING TRANSFORMER FEEDER "TX-2"	480V	50A	MOTOR CONTROL CENTER "MCC-2"	LIGHTING TRANSFORMER	--	3#6 AWG., #8 GND., 3/4"C.
901	LIGHTING TRANSFORMER GROUND "TX-2"	--	--	LIGHTING PANEL	GROUND FIELD	--	#6 GND., 1"C.
902	ATS INPUT, SOURCE 2	120/208V	100A	LIGHTING TRANSFORMER "TX-2"	ATS	--	4#3 AWG., #6 GND., 1-1/2"C.
903	INTRUSION ALARM "MCC-1" ROOM	24VDC	--	MOTION SWITCH "MS1"	CONTROL PANEL	--	2#14, 3/4"C.
904	INTRUSION ALARM "MCC-2" ROOM	24VDC	--	MOTION SWITCH "MS2"	CONTROL PANEL	--	2#14, 3/4"C.
1000	LEVEL TRANSMITTER "LT-1"	24VDC	--	TRANSMITTER	TRANSMITTER JUNCTION BOX	--	MANUFACTURER CABLE IN 2-1/2"C.
1001	LEVEL TRANSMITTER "LT-2"	24VDC	--	TRANSMITTER	TRANSMITTER JUNCTION BOX	--	MANUFACTURER CABLE IN 2-1/2"C.
1002	COMBINED LEVEL TRANSMITTERS & FLOAT SWITCH	24VDC	--	CONTROL PANEL	TRANSMITTER JUNCTION BOX	--	2-TRI, 4#14, 2"C.
1003	WELL FLOAT SWITCHES	24VDC	--	TRANSMITTER JUNCTION BOX	FLOAT SWITCH NO.1	--	MANUFACTURER CABLE IN 2-1/2"C.
1100	120VAC FOR RECEPTACLE	120VAC	--	LIGHTING PANEL	RECEPTACLE NEXT TO PUMP NO.101 J-BOX	--	2#12, #12 G, 1"C.
1200	120VAC FOR RECEPTACLE	120VAC	--	LIGHTING PANEL	RECEPTACLE NEXT TO PUMP NO.103 J-BOX	--	2#12, #12 G, 1"C.
1300	SITE LIGHTING	120VAC	--	LIGHTING PANEL	SITE LIGHTS	VIA SITE LIGHTING SWITCH	2#12, #12 G, 1"C.

NO.	DATE	REVISION	APP.

FOR INTERIM REVIEW
ONLY NOT INTENDED FOR
PERMIT, BIDDING OR
CONSTRUCTION PURPOSES.
ENGINEER:
HOSS FOROUZAN
P.E. SERIAL NO.77748
05/18/2026

GAI
Gupta & Associates, Inc.
CONSULTING ENGINEERING
Registration No. F-2593
302 Dennis St.,
Houston, Texas 77006
Tel: 713-636-2936
Fax: 713-636-2987
email: hforouzan@gaiconsulting.com

IDS Engineering Group
13430 NW. Freeway
Suite 700
Houston, Tx. 77040
713.462.3178
TxEng Firm 2726
TxSurv Firm 10110700

CITY OF HOUSTON
HOUSTON PUBLIC WORKS

LIFT STATION RENEWAL
AND REPLACEMENT FY 2023

SCOTT NO.3 LIFT STATION
CONDUIT SCHEDULE–II

WBS NUMBER	FOR CITY OF HOUSTON USE ONLY
R-000267-0179-4	
DRAWING SCALE	
HORIZ: NONE VERT: NONE	
CITY OF HOUSTON PM	
NAWARAJ PANTA, P.E.	
SHEET NO. 153 OF 361	

DWG. NO.
SCT–E–14

IDS JOB No. 0057-085-00

PLOTTED: 5/12/2026 8:43 PM
FILE PATH: O:\H8108_Lift Station Rehabilitation And Reconstruction (IDS)\6 Drawings\Electrical\Working\Scott #3\H8108_SCT-E-14.dwg

PLOTTED: 5/12/2026 8:43 PM

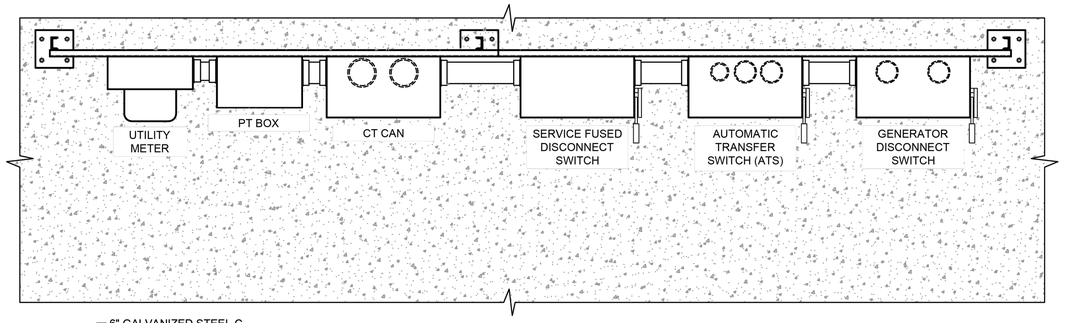

PLAN VIEW 1B

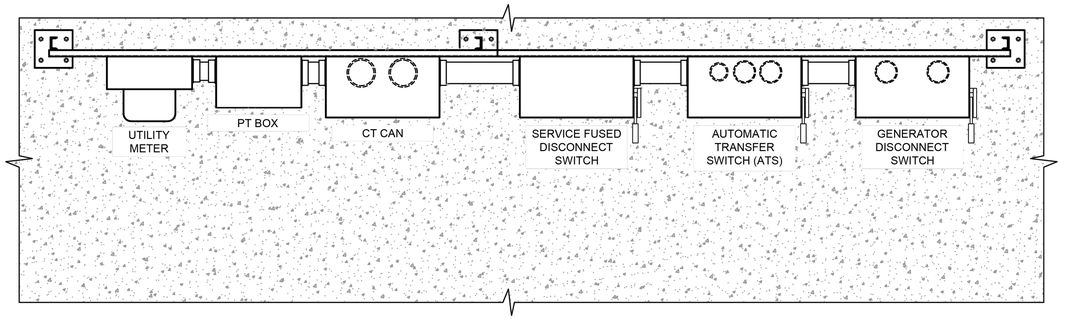

PLAN VIEW 2B

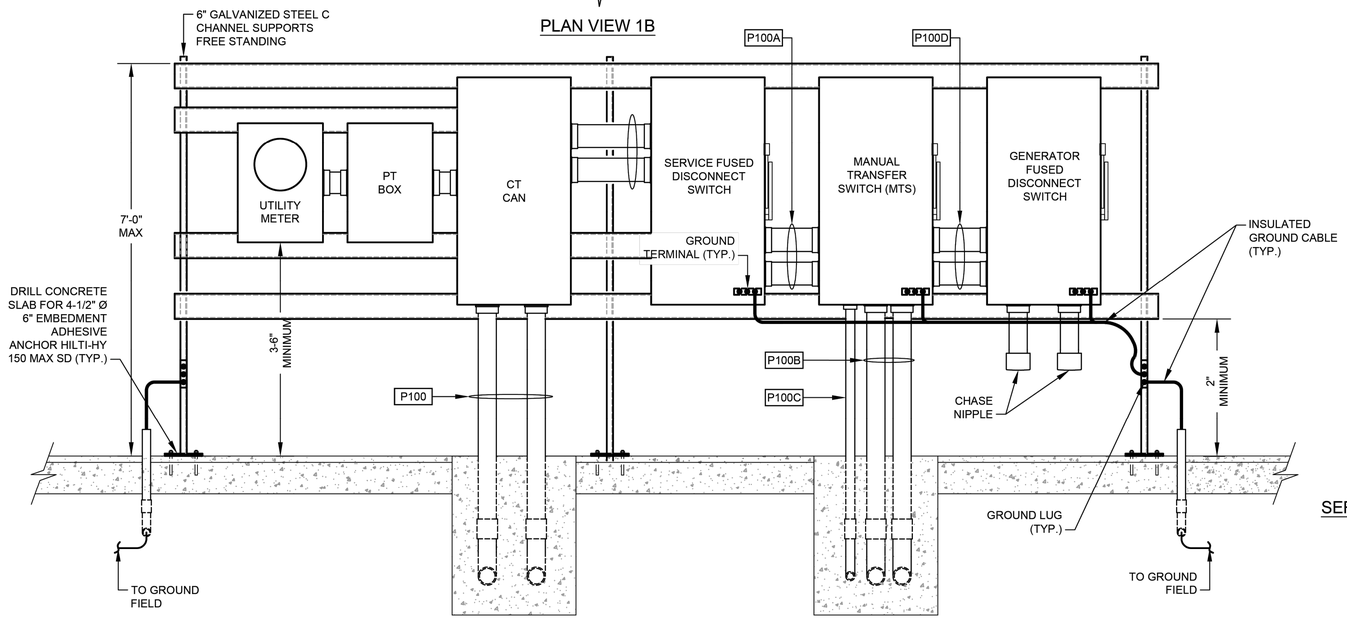

ELEVATION 1A

SERVICE NO.1 MOUNTING RACK

DETAIL 1 / NTS. -

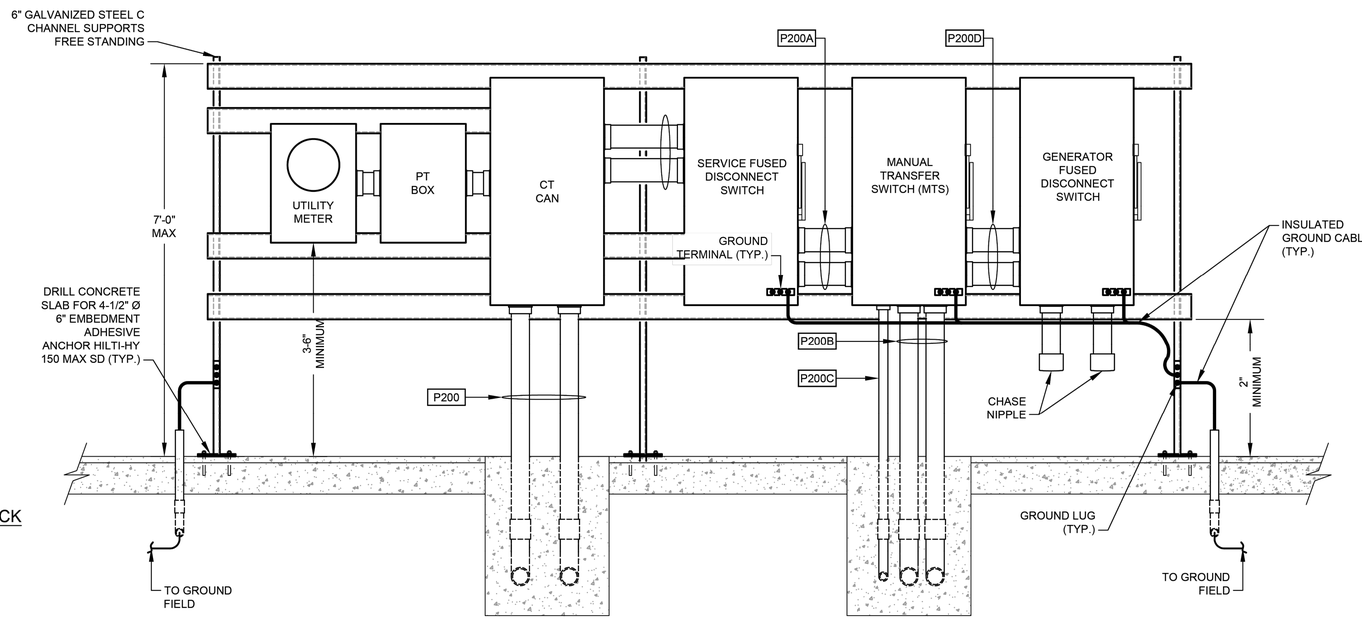

ELEVATION 2A

SERVICE NO.2 MOUNTING RACK

DETAIL 2 / NTS. -

NO.	DATE	REVISION	APP.

FOR INTERIM REVIEW ONLY NOT INTENDED FOR PERMIT, BIDDING OR CONSTRUCTION PURPOSES.
ENGINEER:
HOSS FOROUZAN
P.E. SERIAL NO.77748
05/18/2026

GAI
Gupta & Associates, Inc.
CONSULTING ENGINEERING
Registration No. F-2593
302 Dennis St.,
Houston, Texas 77006
Tel: 713-636-2936
Fax: 713-636-2987
email: hforouzan@gaiconsulting.com

IDS Engineering Group
13430 NW. Freeway
Suite 700
Houston, Tx. 77040
713.462.3178
TxEng Firm 2726
TxSurv Firm 10110700

CITY OF HOUSTON
HOUSTON PUBLIC WORKS

LIFT STATION RENEWAL AND REPLACEMENT FY 2023

SCOTT NO.3 LIFT STATION SERVICE RACK DETAIL

WBS NUMBER	FOR CITY OF HOUSTON USE ONLY
R-000267-0179-4	
DRAWING SCALE	
HORIZ: NTS VERT: NTS	
CITY OF HOUSTON PM	
NAWARAJ PANTA, P.E.	
DWG. NO. SCT-E-15	SHEET NO. 154 OF 361

IDS JOB No. 0057-085-00

FILE PATH: O:\H8108_Lift Station Rehabilitation And Reconstruction (IDS)\6 Drawings\Electrical\Working\Scott #3\H8108_SCT-E-15.dwg

PLOTTED: 5/12/2026 8:43 PM

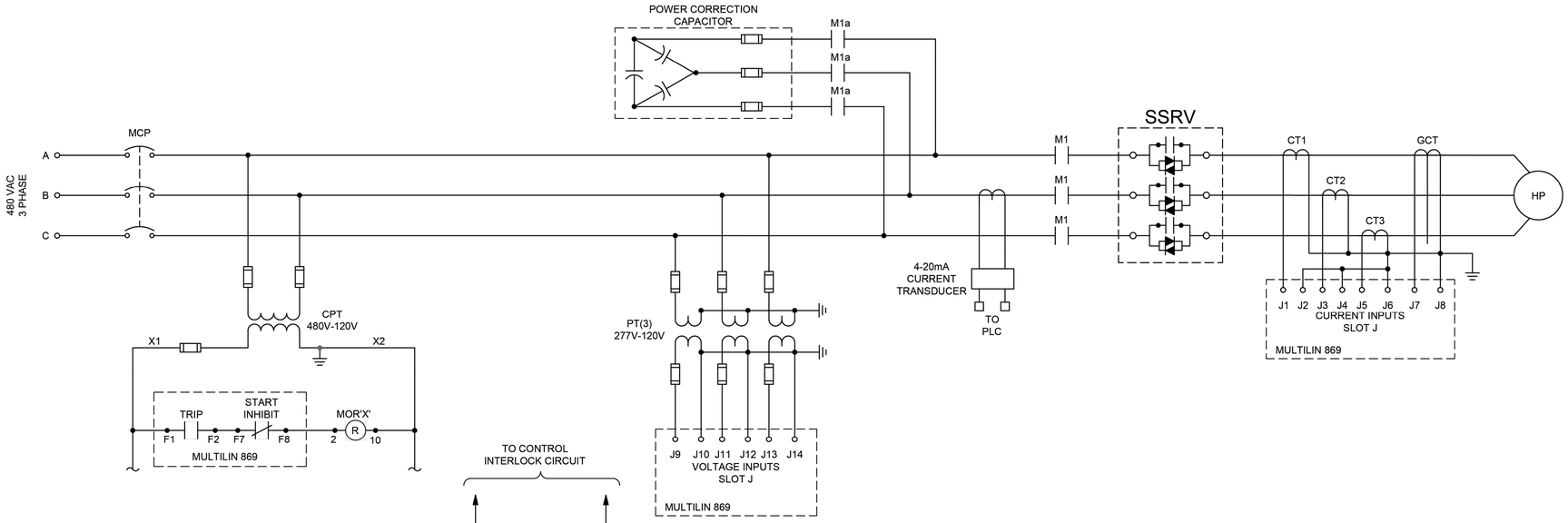

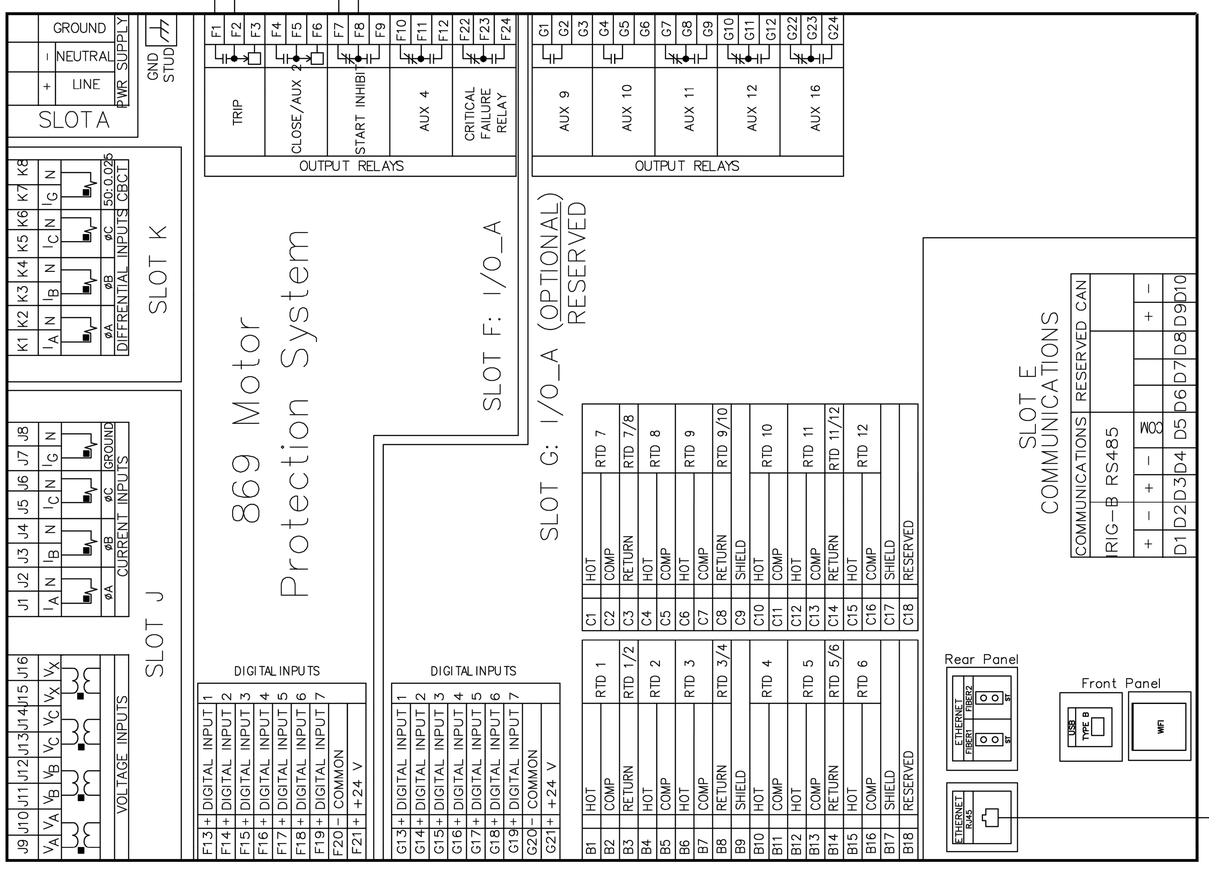

NOTES:

1. THIS SCHEMATIC DIAGRAM IS APPLIED FOR WET PUMP NO.W1, W2, W3, W4.

NO.	DATE	REVISION	APP.

FOR INTERIM REVIEW
ONLY NOT INTENDED FOR
PERMIT, BIDDING OR
CONSTRUCTION PURPOSES.
ENGINEER:
HOSS FOROUZAN
P.E. SERIAL NO.77748
05/18/2026

GAI
Gupta & Associates, Inc.
CONSULTING ENGINEERING
Registration No. F-2593
302 Dennis St.,
Houston, Texas 77006
Tel: 713-636-2936
Fax: 713-636-2987
email: hforouzan@gaiconsulting.com

IDS Engineering Group
13430 NW. Freeway
Suite 700
Houston, Tx. 77040
713.462.3178
TxEng Firm 2726
TxSurv Firm 10110700

CITY OF HOUSTON
HOUSTON PUBLIC WORKS

LIFT STATION RENEWAL
AND REPLACEMENT FY 2023

SCOTT NO.3 LIFT STATION MULTILIN 869 MOTOR WIRING DIAGRAM

WBS NUMBER	FOR CITY OF HOUSTON USE ONLY
R–000267–0179–4	
DRAWING SCALE	
HORIZ: NONE VERT: NONE	
CITY OF HOUSTON PM	
NAWARAJ PANTA, P.E.	
DWG. NO. SCT–E–16	SHEET NO. 155 OF 361

IDS JOB No. 0057-085-00

FILE PATH: O:\H8108_Lift Station Rehabilitation And Reconstruction (IDS)\6 Drawings\Electrical\Working\Scott #3\H8108_SCT-E-16.dwg

PLOTTED: 5/12/2026 9:00 PM

HMI

WET PUMP NO. W1

SEAL FAIL ALARM	MOTOR OVERLOAD ALARM	MOTOR CURRENT	HIGH TEMP ALARM	IN HAND	IN AUTO	ON/OFF	START/ STOP
MA 1	MO 1	II 1	TH 1	HI 1	IA 1	YFS 1	YCS 1

WET PUMP NO.W2

SEAL FAIL ALARM	MOTOR OVERLOAD ALARM	MOTOR CURRENT	HIGH TEMP ALARM	IN HAND	IN AUTO	ON/OFF	START/ STOP
MA 2	MO 2	II 2	TH 2	HI 2	IA 2	YFS 2	YCS 2

WET PUMP NO.W3

SEAL FAIL ALARM	MOTOR OVERLOAD ALARM	MOTOR CURRENT	HIGH TEMP ALARM	IN HAND	IN AUTO	ON/OFF	START/ STOP
MA 3	MO 3	II 3	TH 3	HI 3	IA 3	YFS 3	YCS 3

WET PUMP NO.W4

SEAL FAIL ALARM	MOTOR OVERLOAD ALARM	MOTOR CURRENT	HIGH TEMP ALARM	IN HAND	IN AUTO	ON/OFF	START/ STOP
MA 4	MO 4	II 4	TH 4	HI 4	IA 4	YFS 4	YCS 4

DRY PUMP NO.D5

SEAL FAIL ALARM	MOTOR OVERLOAD ALARM	MOTOR CURRENT	HIGH TEMP ALARM	IN HAND	IN AUTO	ON/OFF	START/ STOP
MA D5	MO D5	II D5	TH D5	HI D5	IA D5	YFS D5	YCS D5

CONTROL PANEL PLC

CONTROL BUILDING

480V

INFLUENT PUMPS MCC

WET PUMP NO. W1 — H/O/A — RUN
WET PUMP NO. W2 — H/O/A — RUN
WET PUMP NO. W3 — H/O/A — RUN
WET PUMP NO. W4 — H/O/A — RUN
DRY PUMP NO. D5 — H/O/A — RUN
DRY PUMP NO. D6 — H/O/A — RUN

PRIMARY PLC
BACKUP PLC
INFLUENT PUMP CONTROL PANEL
ALARMS RESET
OIT

TO SHEET SCT-I-2

SC-I2
SC-I2

LT 1
LE 1
LT 2
LE 2

WET WELL

HIGH-HIGH LEVEL FLOAT SWITCH FS2

HIGH LEVEL FLOAT SWITCH FS1

LSH 4A
TSH 4A
LSH 3A
TSH 3A
LSH 2A
TSH 2A
LSH 1A
TSH 1A
LSH D1
TSH D1
LSH D2
TSH D2

XX"-DIP
XX"-DIP
XX"-DIP
XX"-DIP
XX"-DIP
XX"-DIP
XX"-DIP
XX"-DIP
XX"-DIP
XX"-DIP

INFLUENT DISCHARGE
INFLUENT DISCHARGE

FOR INTERIM REVIEW ONLY NOT INTENDED FOR PERMIT, BIDDING OR CONSTRUCTION PURPOSES.
ENGINEER:
HOSS FOROUZAN
P.E. SERIAL NO.77748
05/18/2026

GAI
Gupta & Associates, Inc.
CONSULTING ENGINEERING
Registration No. F-2593
302 Dennis St.,
Houston, Texas 77006
Tel: 713-636-2936
Fax: 713-636-2987
email: hforouzan@gaiconsulting.com

IDS Engineering Group
13430 NW. Freeway
Suite 700
Houston, Tx. 77040
713.462.3178
TxEng Firm 2726
TxSurv Firm 10110700

CITY OF HOUSTON
HOUSTON PUBLIC WORKS

LIFT STATION RENEWAL AND REPLACEMENT FY 2023

SCOTT NO.3 LIFT STATION P&ID DIAGRAM–I

WBS NUMBER	FOR CITY OF HOUSTON USE ONLY
R–000267–0179–4	
DRAWING SCALE	
HORIZ: NONE VERT: NONE	
CITY OF HOUSTON PM	
NAWARAJ PANTA, P.E.	
SHEET NO. 156 OF 361	

DWG. NO. SCT–I–01

NO.	DATE	REVISION	APP.

FILE PATH: O:\HB108_Lift Station Rehabilitation And Reconstruction (IDS)\6 Drawings\Instrumentation And Control\Working\Scott #3\HB108_SCT–I–01.dwg

IDS JOB No. 0057-085-00

PLOTTED: 5/12/2026 9:00 PM

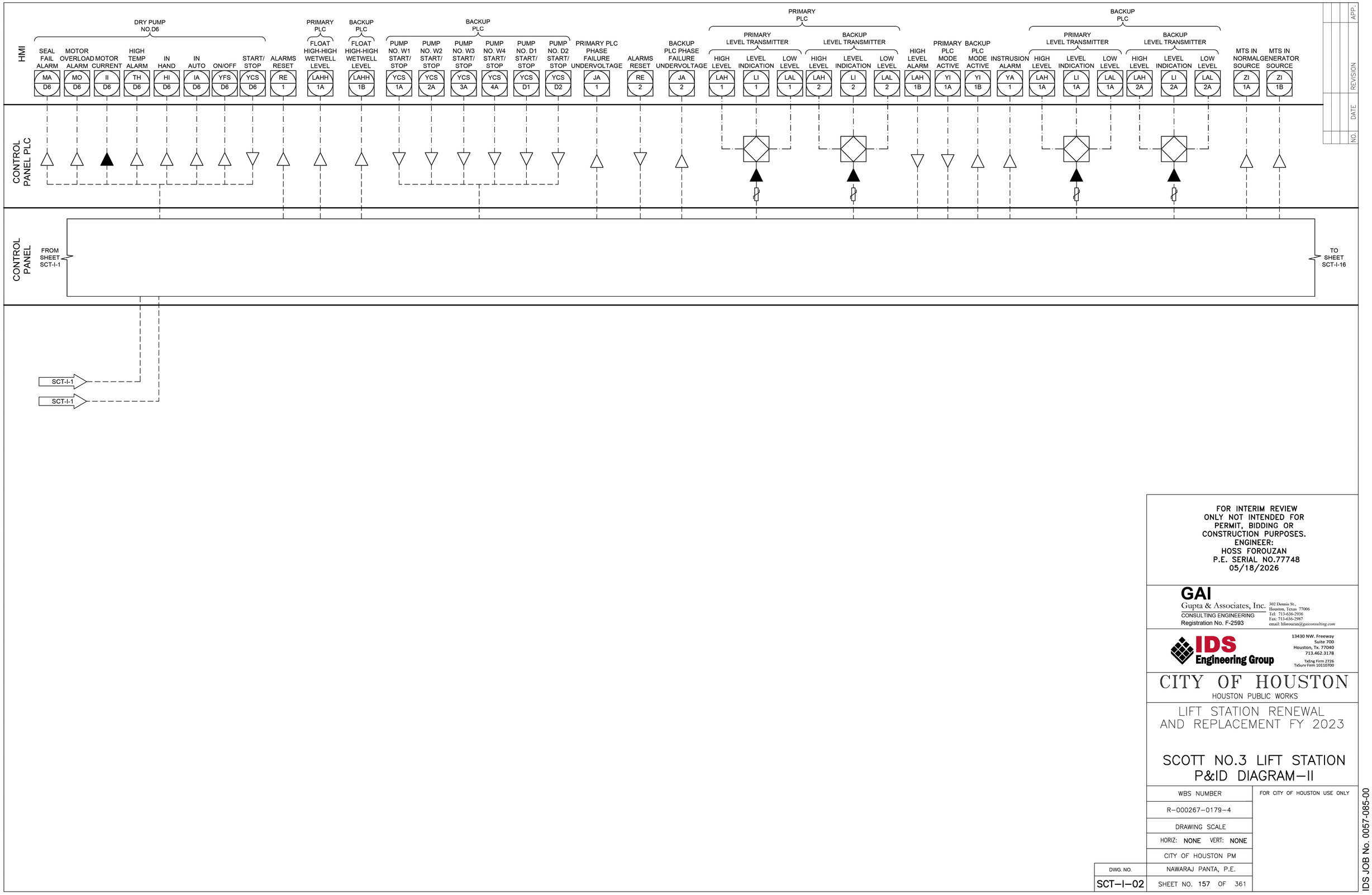

NO.	DATE	REVISION	APP.

FOR INTERIM REVIEW
ONLY NOT INTENDED FOR
PERMIT, BIDDING OR
CONSTRUCTION PURPOSES.
ENGINEER:
HOSS FOROUZAN
P.E. SERIAL NO.77748
05/18/2026

GAI
Gupta & Associates, Inc.
CONSULTING ENGINEERING
Registration No. F-2593
302 Dennis St.,
Houston, Texas 77006
Tel: 713-636-2936
Fax: 713-636-2987
email: hforouzan@gaiconsulting.com

IDS Engineering Group
13430 NW. Freeway
Suite 700
Houston, Tx. 77040
713.462.3178
TxEng Firm 2726
TxSurv Firm 10110700

CITY OF HOUSTON
HOUSTON PUBLIC WORKS

LIFT STATION RENEWAL AND REPLACEMENT FY 2023

SCOTT NO.3 LIFT STATION P&ID DIAGRAM–II

WBS NUMBER	FOR CITY OF HOUSTON USE ONLY
R–000267–0179–4	
DRAWING SCALE	
HORIZ: NONE VERT: NONE	
CITY OF HOUSTON PM	
NAWARAJ PANTA, P.E.	
DWG. NO. SCT–I–02	SHEET NO. 157 OF 361

FILE PATH: O:\H8108_Lift Station Rehabilitation And Reconstruction (IDS)\6 Drawings\Instrumentation And Control\Working\Scott #3\H8108_SCT–I–02.dwg

IDS JOB No. 0057-085-00

PLOTTED: 5/12/2026 9:00 PM

FILE PATH: O:\H8108_Lift Station Rehabilitation And Reconstruction (IDS)\6 Drawings\Instrumentation And Control\Working\Scott #3\H8108_SCT-I-03.dwg

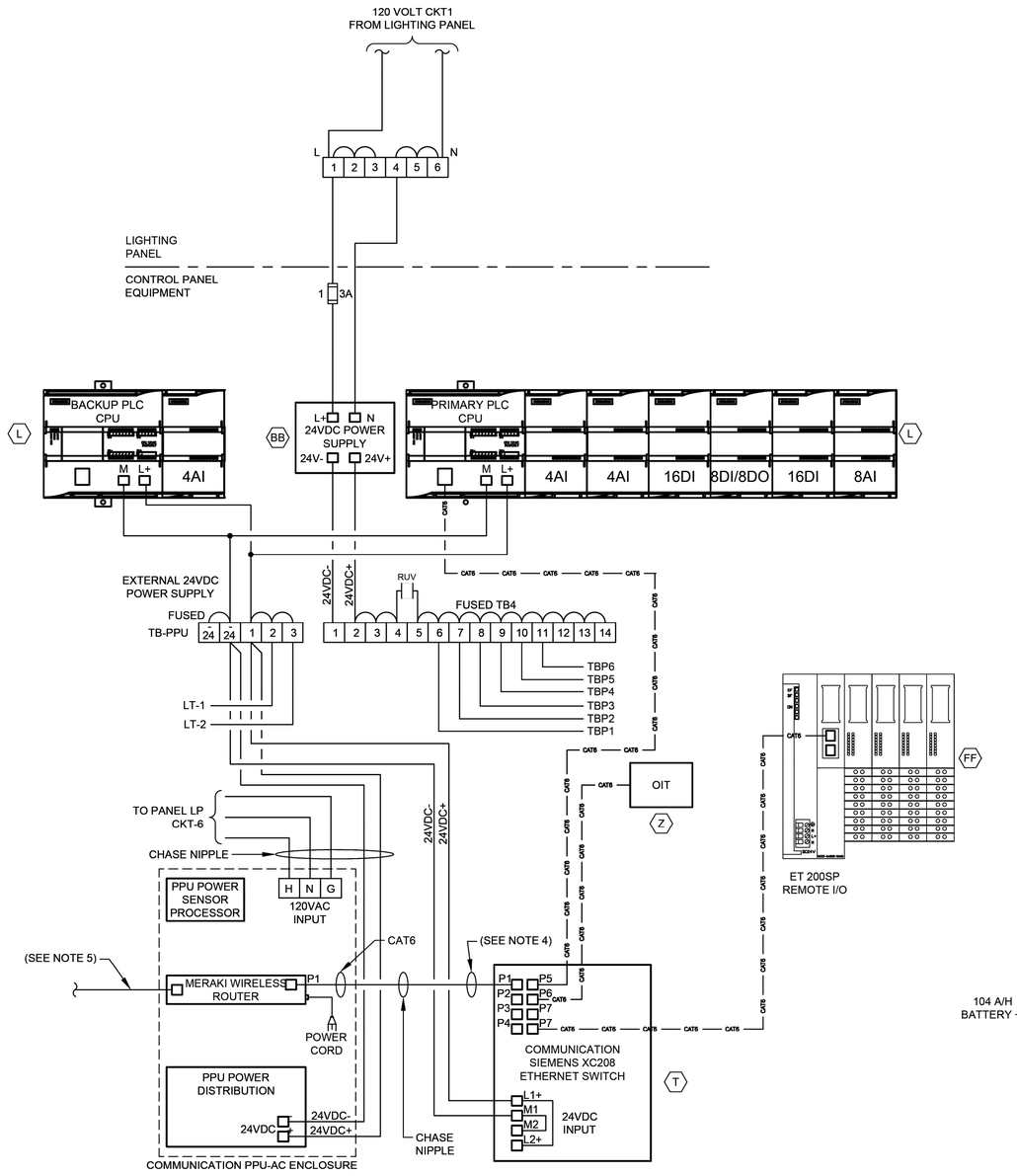

CONTROL POWER &
COMMUNICATIONS WIRING

DIAGRAM

NTS

(SEE NOTE 2 & 6)

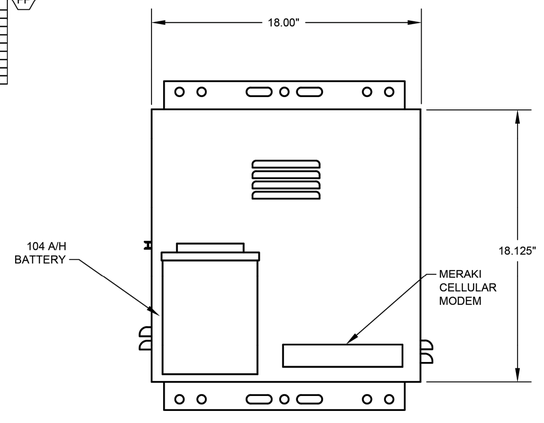

PPU-AC ENCLOSURE
FRONT VIEW

PPU-AC ENCLOSURE
SIDE VIEW

PPU-AC
CONTROL ENCLOSURE

ELEVATION

NTS

(SEE NOTE 7)

NOTES:

1. FOR DESCRIPTION AND RATINGS OF ITEMS INDICATED WITH ITEM TAG, SEE DEVICE RATINGS SCHEDULE.
2. REFER TO SPEC SECTION 16120 FOR CONDUCTOR COLOR CODE.
3. THE PLC POWER SUPPLY SHALL FEED THE 24VDC I/O.
4. ETHERNET CABLE FOR MERAKI CELLULAR ROUTER (P1).
5. CAT6 POE CABLE TO RADIO.
6. COMMUNICATION PPU-AC & SCADA SHALL BE PROVIDED BY CONTRACTOR INCLUDING TO RUN CONDUITS & WIRES.
7. COORDINATE WITH VENDOR TO PROVIDE PROPER VENTILATION WHERE APPLICABLE.

GENERAL NOTES:

1. NO ELECTRICAL MATERIAL, APPARATUS, DEVICES, APPLIANCES, FIXTURES, OR EQUIPMENT SHALL BE SOLD OR INSTALLED IN THE CITY UNLESS THEY ARE IN CONFORMANCE WITH THE PROVISIONS OF SECTION 508 CITY OF HOUSTON ELECTRICAL CODE, THE LAWS OF THE STATE OF TEXAS AND ANY APPLICABLE RULES AND REGULATIONS ISSUED UNDER THE AUTHORITY OF THE STATE STATUES. THE MAKER'S NAME, TRADEMARK, OR OTHER IDENTIFICATION SYMBOL SHALL BE PLACED ON ALL ELECTRICAL MATERIALS, APPARATUS, DEVICES, APPLIANCES, FIXTURES, AND EQUIPMENT USED OR INSTALLED UNDER THE PROVISIONS OF THIS CODE. ALL ELECTRICAL MATERIALS AND EQUIPMENT SHALL BE LISTED AND LABELED FOR THE INTENDED USE AND SHALL BE INCLUDED IN A LIST PUBLISHED BY AN APPROVAL AGENCY.

NO.	DATE	REVISION	APP.

FOR INTERIM REVIEW
ONLY NOT INTENDED FOR
PERMIT, BIDDING OR
CONSTRUCTION PURPOSES.
ENGINEER:
HOSS FOROUZAN
P.E. SERIAL NO.77748
05/18/2026

GAI
Gupta & Associates, Inc.
CONSULTING ENGINEERING
Registration No. F-2593
302 Dennis St.,
Houston, Texas 77006
Tel: 713-636-2936
Fax: 713-636-2987
email: hforouzan@gaiconsulting.com

IDS Engineering Group
13430 NW. Freeway
Suite 700
Houston, Tx. 77040
713.462.3178
TxEng Firm 2726
TxSurv Firm 10110700

CITY OF HOUSTON

HOUSTON PUBLIC WORKS

LIFT STATION RENEWAL AND REPLACEMENT FY 2023

SCOTT NO.3 LIFT STATION COMMUNICATION DIAGRAM

WBS NUMBER	FOR CITY OF HOUSTON USE ONLY
R-000267-0179-4	
DRAWING SCALE	
HORIZ: NTS VERT: NTS	
CITY OF HOUSTON PM	
NAWARAJ PANTA, P.E.	
SHEET NO. 158 OF 361	

DWG. NO. SCT-I-03

IDS JOB No. 0057-085-00

PLOTTED: 5/12/2026 9:00 PM

EQUIPMENT AND DEVICE SCHEDULE		
ITEM	QUANTITY	DESCRIPTION
A	1	SINGLE CHANNEL INTRINSICALLY SAFE RELAY
B	2	ANALOG SIGNAL ISOLATOR
C	6	PUMP PROTECTION MODULE
D	*	NOT USED
E	6	HAND-OFF-AUTO SWITCH, 3 POSITION, HEAVY-DUTY OIL TIGHT WITH 2 SETS OF CONTACT BLOCKS (PUMP CONTROL)
F	6	INDICATING LIGHT, HEAVY DUTY, OILTIGHT, RED, 24 VDC, LED, WITH "RUN" LEGEND
G	*	NOT USED.
H	1	SWITCH FOR CABINET LIGHT, 120V, 20A, SPST
I	2	DUPLEX RECEPTACLE, 120V, 20A, 2 WIRE, GROUNDED, GFCI TYPE
J	1	24" LED STRIP LIGHT 120V SUITABLE FOR ZERO DEGREE OPERATION.
K	*	NAMEPLATES, SEE SPECIFICATIONS (SEE NAMEPLATE SCHEDULE)
L	2	PROGRAMMABLE LOGIC CONTROLLER WITH EXPANSION UNIT
M	*	CONTROL RELAY 24VDC RELAY WITH THREE FORM C CONTACTS AND 11 PIN SOCKET BASE
N	-	NOT USED
O	-	NOT USED
P	1	NEMA 12 GASKETED STEEL ENCLOSURES WITHOUT VENTS 72" H X 20" D X 72" W
Q	*	TERMINAL BLOCK
R	1	WIRE DUCT 2" WIDE X 2" DEEP MINIMUM
S	1	GROUND BUS
T	1	COMMUNICATION ETHERNET SWITCH
U	9	CARTRIDGE
V	1	PUSHBUTTON, BLACK WITH RESET LEGEND
W	-	NOT USED
X	*	FUSED TERMINAL BLOCKS
Y	1	POWER SURGE PROTECTOR - CONTROL POWER
Z	1	PROGRAMMING SCREEN (OIT)
AA	*	120VAC SYSTEM FUSES
BB	1	120VAC - 24VDC POWER SUPPLY, 5A
CC	*	NOT USED
DD	2	INDICATING LIGHT, HEAVY DUTY, OILTIGHT, GREEN, 24VDC, LED WITH "BACKUP PLC" & "PRIMARY PLC" LEGEND
EE	4	ANALOG I/O SURGE SUPPRESSOR
FF	1	REMOTE I/O WITH EXPANSION UNIT

* - AS SCHEDULED

NAMEPLATE SCHEDULE

DESIGNATION	ENGRAVED
N1	PUMP STATION DESIGNATION
N2	WET PUMP NO. W1
N3	WET PUMP NO. W2
N4	WET PUMP NO. W3
N5	WET PUMP NO. W4
N6	DRY PUMP NO. D5
N7	DRY PUMP NO. D6

DESIGNATION	ENGRAVED
N8	NOT USED.
N9	NOT USED.
N10	PROGRAMMING SCREEN
N11	NOT USED.
N12	PRIMARY PLC
N13	BACKUP PLC
N14	MOTOR DATA HORSEPOWER (OUTPUT) ---------- RPM AT FULL LOAD ---------- TIME RATING ---------- FREQUENCY ---------- NUMBER OF PHASES ---------- MODEL NUMBER ---------- RATED VOLTAGE ---------- SERVICE FACTOR ---------- FULL LOAD AMPS ---------- INSULATION CLAS ---------- NEMA DESIGN LETTER ---------- TEMPERATURE RISE ---------- NEMA FRAME SIZE ---------- DATE OF MANUFACTURE ---------- THERMO PROTECTION (IF REQUIRED) -- MOISTURE PROTECTION (IF REQUIRED)-

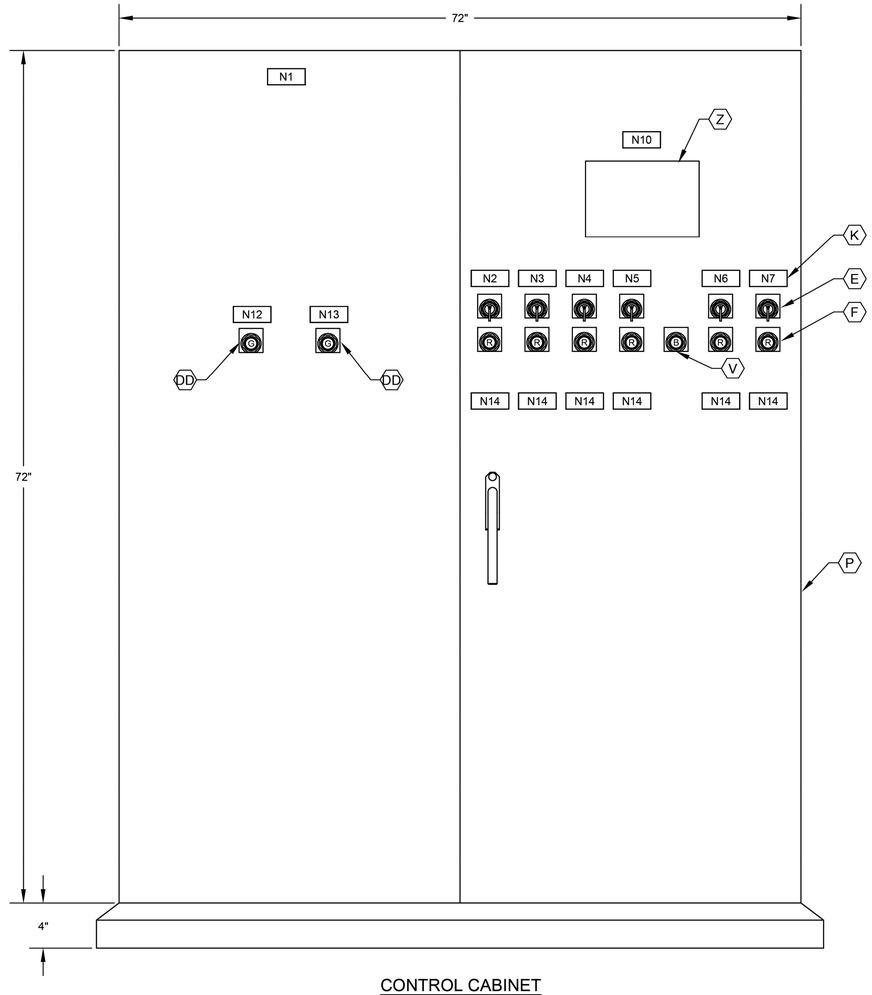

CONTROL CABINET
FRONT DOOR ELEVATION

NOTES:

1. NAMEPLATES SHALL BE MOUNTED TO PANELS USING STAINLESS STEEL HARDWARE.
2. REFER SPECIFICATIONS FOR ALL PANEL COMPONENTS.

GENERAL NOTES:

3. NO ELECTRICAL MATERIAL, APPARATUS, DEVICES, APPLIANCES, FIXTURES, OR EQUIPMENT SHALL BE SOLD OR INSTALLED IN THE CITY UNLESS THEY ARE IN CONFORMANCE WITH THE PROVISIONS OF SECTION 508 CITY OF HOUSTON ELECTRICAL CODE, THE LAWS OF THE STATE OF TEXAS AND ANY APPLICABLE RULES AND REGULATIONS ISSUED UNDER THE AUTHORITY OF THE STATE STATUES. THE MAKER'S NAME, TRADEMARK, OR OTHER IDENTIFICATION SYMBOL SHALL BE PLACED ON ALL ELECTRICAL MATERIALS, APPARATUS, DEVICES, APPLIANCES, FIXTURES, AND EQUIPMENT USED OR INSTALLED UNDER THE PROVISIONS OF THIS CODE. ALL ELECTRICAL MATERIALS AND EQUIPMENT SHALL BE LISTED AND LABELED FOR THE INTENDED USE AND SHALL BE INCLUDED IN A LIST PUBLISHED BY AN APPROVAL AGENCY.

NO.	DATE	REVISION	APP.

FOR INTERIM REVIEW
ONLY NOT INTENDED FOR
PERMIT, BIDDING OR
CONSTRUCTION PURPOSES.
ENGINEER:
HOSS FOROUZAN
P.E. SERIAL NO.77748
05/18/2026

GAI
Gupta & Associates, Inc.
CONSULTING ENGINEERING
Registration No. F-2593
302 Dennis St.,
Houston, Texas 77006
Tel: 713-636-2936
Fax: 713-636-2987
email: hforouzan@gaiconsulting.com

IDS Engineering Group
13430 NW. Freeway
Suite 700
Houston, Tx. 77040
713.462.3178
TxEng Firm 2726
TxSurv Firm 10110700

CITY OF HOUSTON
HOUSTON PUBLIC WORKS

LIFT STATION RENEWAL
AND REPLACEMENT FY 2023

SCOTT NO.3 LIFT STATION CONTROL PANEL EQUIPMENT LAYOUT & SCHEDULE

WBS NUMBER	FOR CITY OF HOUSTON USE ONLY
R-000267-0179-4	
DRAWING SCALE	
HORIZ: NONE VERT: NONE	
CITY OF HOUSTON PM	
NAWARAJ PANTA, P.E.	
DWG. NO. SCT-I-04	SHEET NO. 159 OF 361

IDS JOB No. 0057-085-00

FILE PATH: O:\H8108_Lift Station Rehabilitation And Reconstruction (IDS)\6 Drawings\Instrumentation And Control\Working\Scott #3\H8108_SCT-I-04.dwg

PLOTTED: 5/12/2026 9:00 PM

FILE PATH: O:\H8108_Lift Station Rehabilitation And Reconstruction (IDS)\6 Drawings\Instrumentation And Control\Working\Scott #3\H8108_SCT-I-05.dwg

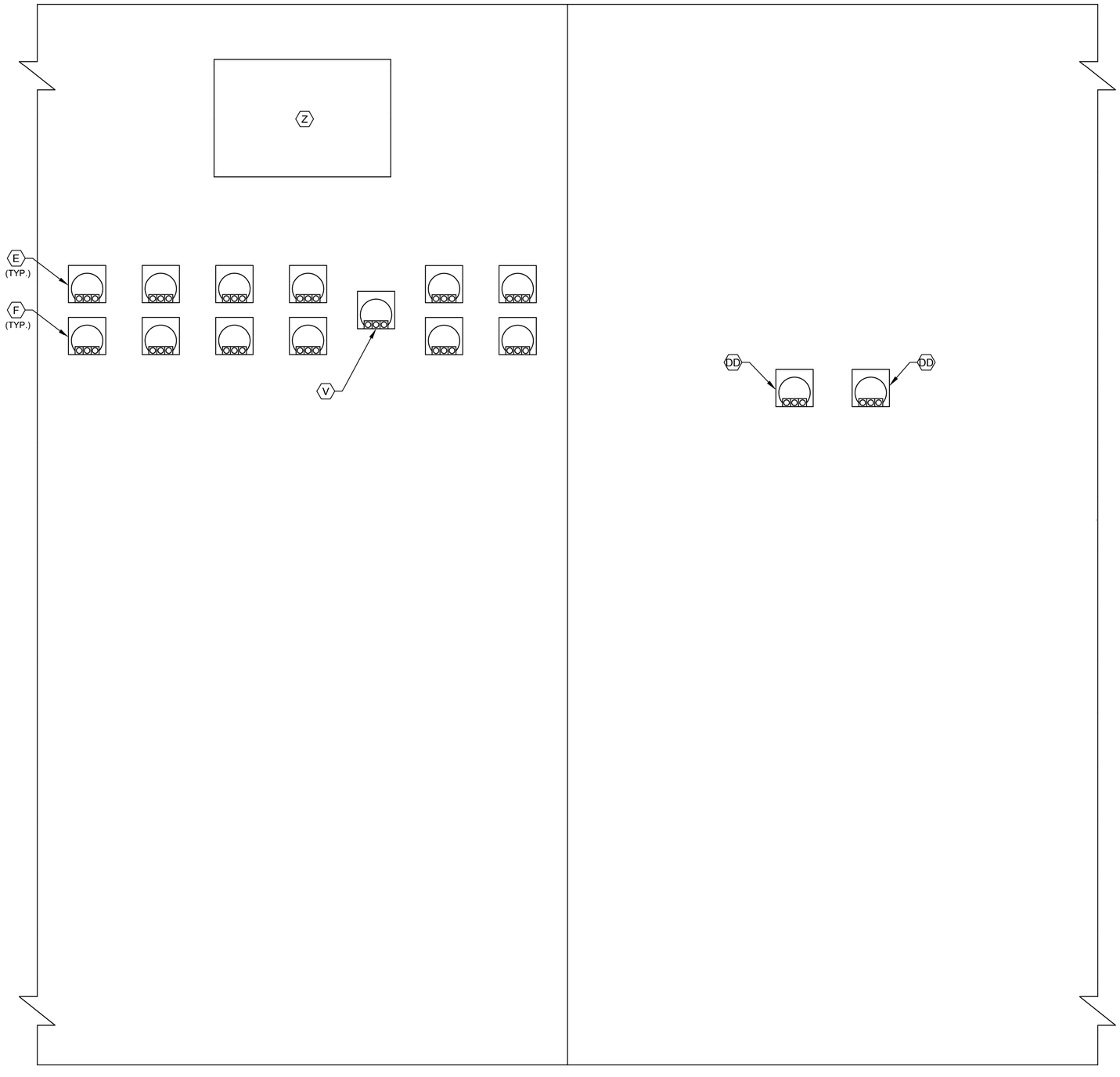

CONTROL CABINET
BACK DOOR ELEVATION

NOTES:

1. SEE SHEET SCT-I-4 FOR EQUIPMENT SCHEDULE.

GENERAL NOTES:

1. NO ELECTRICAL MATERIAL, APPARATUS, DEVICES, APPLIANCES, FIXTURES, OR EQUIPMENT SHALL BE SOLD OR INSTALLED IN THE CITY UNLESS THEY ARE IN CONFORMANCE WITH THE PROVISIONS OF SECTION 508 CITY OF HOUSTON ELECTRICAL CODE, THE LAWS OF THE STATE OF TEXAS AND ANY APPLICABLE RULES AND REGULATIONS ISSUED UNDER THE AUTHORITY OF THE STATE STATUES. THE MAKER'S NAME, TRADEMARK, OR OTHER IDENTIFICATION SYMBOL SHALL BE PLACED ON ALL ELECTRICAL MATERIALS, APPARATUS, DEVICES, APPLIANCES, FIXTURES, AND EQUIPMENT USED OR INSTALLED UNDER THE PROVISIONS OF THIS CODE. ALL ELECTRICAL MATERIALS AND EQUIPMENT SHALL BE LISTED AND LABELED FOR THE INTENDED USE AND SHALL BE INCLUDED IN A LIST PUBLISHED BY AN APPROVAL AGENCY.

NO.	DATE	REVISION	APP.

FOR INTERIM REVIEW
ONLY NOT INTENDED FOR
PERMIT, BIDDING OR
CONSTRUCTION PURPOSES.
ENGINEER:
HOSS FOROUZAN
P.E. SERIAL NO.77748
05/18/2026

GAI
Gupta & Associates, Inc.
CONSULTING ENGINEERING
Registration No. F-2593
302 Dennis St.,
Houston, Texas 77006
Tel: 713-636-2936
Fax: 713-636-2987
email: hforouzan@gaiconsulting.com

IDS Engineering Group
13430 NW. Freeway
Suite 700
Houston, Tx. 77040
713.462.3178
TxEng Firm 2726
TxSurv Firm 10110700

CITY OF HOUSTON
HOUSTON PUBLIC WORKS

LIFT STATION RENEWAL
AND REPLACEMENT FY 2023

SCOTT NO.3 LIFT STATION
CONTROL PANEL
BACK DOOR ELEVATION

WBS NUMBER	FOR CITY OF HOUSTON USE ONLY
R-000267-0179-4	
DRAWING SCALE	
HORIZ: NONE VERT: NONE	
CITY OF HOUSTON PM	
NAWARAJ PANTA, P.E.	
SHEET NO. 160 OF 361	

DWG. NO. SCT-I-05

IDS JOB No. 0057-085-00

PLOTTED: 5/12/2026 9:01 PM

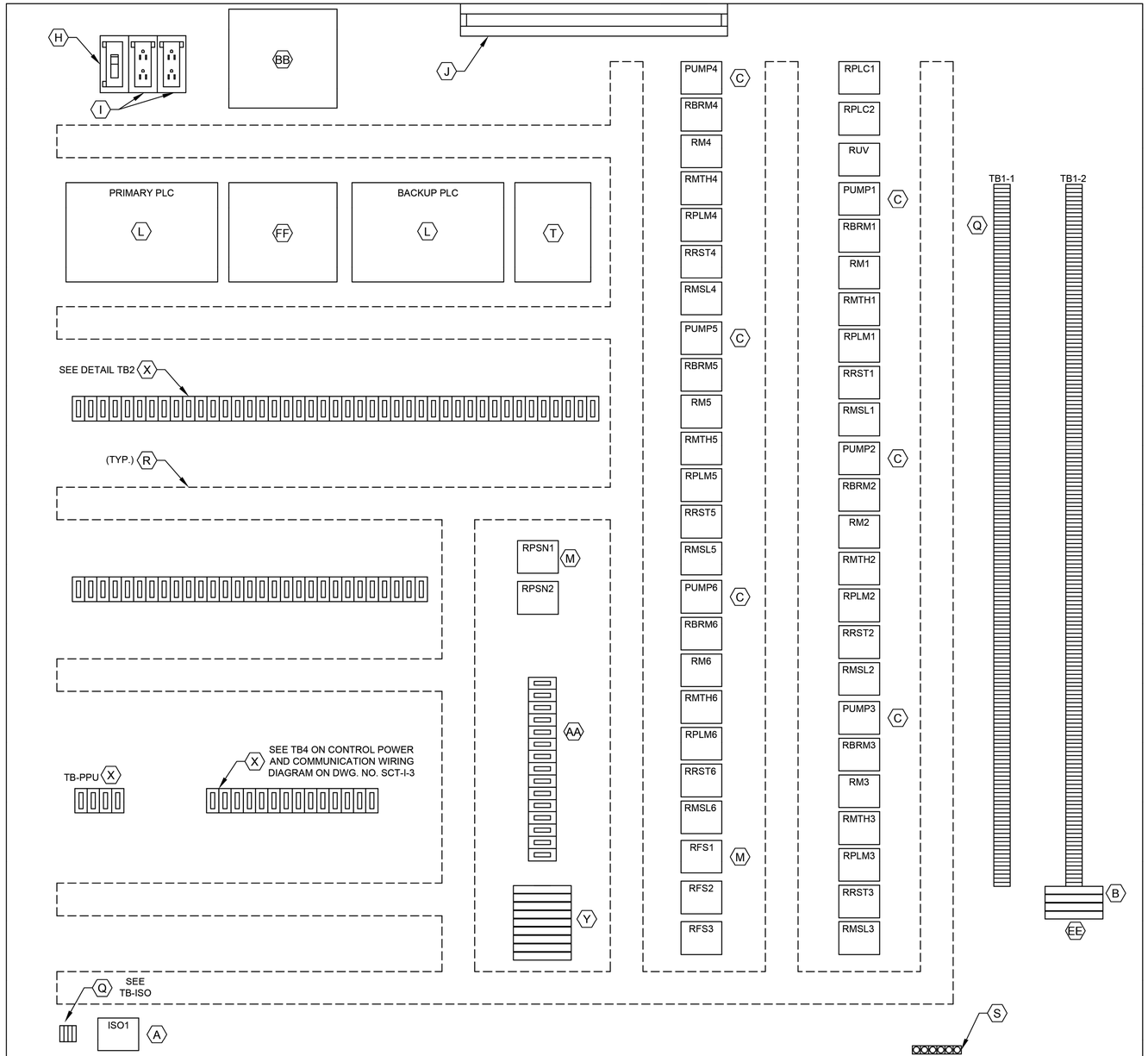

CONTROL PANEL ELEVATION

LEGEND	
TAG	DESCRIPTION
RMTH	MOTOR HIGH TEMPERATURE ALARM RELAY
RPLMP	PLC PUMP RUN RELAY
RRST	PUMP RESET AUX RELAY
RPLC	PLC MODE AUX RELAY
RM	PUMP RUN AUX RELAY
RUV	UNDER VOLTAGE RELAY
RBRM	BACKUP SYSTEM RUN RELAY
ISO	INTRINSICALLY SAFE RELAY
RFS	PUMP RUN FLOAT SWITCH RELAY
RMSL	MOTOR SEAL LEAK ALARM RELAY
RFLP	FLOAT LOCKOUT PUMP RELAY
RPSN	SODIUM NITRATE PUMP RELAY

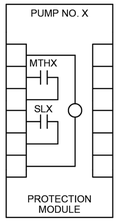

PUMP PROTECTION MODULE DETAIL, ITEM C

NOTE: REPLACE "X" WITH APPROPRIATE PUMP NO.

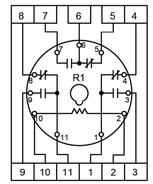

RELAY DETAIL ITEM M

DETAIL TB-ISO
1500
1501
1503
1504

DETAIL TB1-1
L1A
L1N
SPARE
3
3N
SPARE
49
50
51
52
53
54
1004
1
24V-
24V-
SPARE
1002
2
11
1001
1001A
12
1003
1003A
34
3N
SPARE
SPARE
102
103
3P1
109
110
112
116
117
120
121
122
123
124
125
126
127
SPARE
SPARE
202
203
3P2
209
210
212
216
217
220
221
222
223
224
225
226
227

DETAIL TB1-2
SPARE
SPARE
302
303
3P3
309
310
312
316
317
320
321
322
323
324
325
326
327
SPARE
SPARE
402
403
3P4
409
410
412
416
417
420
421
422
423
424
425
426
427
SPARE
SPARE

DETAIL TB1-2
502
503
3P5
509
510
512
516
517
520
521
522
523
524
525
526
527
SPARE
SPARE
602
603
3P6
609
610
612
616
617
620
621
622
623
624
625
626
627

DETAIL TB2
36A
37A
50
52
54
52A
52A
54A
L+
M
35B
38B
41B
44B
SPARE
SPARE
47B
50B
53B
13B
13AB
B
L+
M
14B
14AB
14GB
119
SPARE
L+
M
13
13A
13G
14
14A
14G
1M
2M
1L
3
30
32
34
37
38
41
33B
45
18B
SPARE

DETAIL TB2
100
112
113
114
115
117
118
119
120
121
SPARE
200
212
213
214
215
217
218
219
220
221
SPARE
300
312
313
314
315
317
318
319
320
321
SPARE
400
412
413
414
415
417
418
419
420
421
SPARE

DETAIL TB2
500
512
513
514
515
517
518
519
520
521
SPARE
600
612
613
614
615
617
618
619
620
621
SPARE

NOTES:

1. SEE SHEET SCT-I-4 FOR EQUIPMENT SCHEDULE.

GENERAL NOTES:

1. NO ELECTRICAL MATERIAL, APPARATUS, DEVICES, APPLIANCES, FIXTURES, OR EQUIPMENT SHALL BE SOLD OR INSTALLED IN THE CITY UNLESS THEY ARE IN CONFORMANCE WITH THE PROVISIONS OF SECTION 508 CITY OF HOUSTON ELECTRICAL CODE, THE LAWS OF THE STATE OF TEXAS AND ANY APPLICABLE RULES AND REGULATIONS ISSUED UNDER THE AUTHORITY OF THE STATE STATUES. THE MAKER'S NAME, TRADEMARK, OR OTHER IDENTIFICATION SYMBOL SHALL BE PLACED ON ALL ELECTRICAL MATERIALS, APPARATUS, DEVICES, APPLIANCES, FIXTURES, AND EQUIPMENT USED OR INSTALLED UNDER THE PROVISIONS OF THIS CODE. ALL ELECTRICAL MATERIALS AND EQUIPMENT SHALL BE LISTED AND LABELED FOR THE INTENDED USE AND SHALL BE INCLUDED IN A LIST PUBLISHED BY AN APPROVAL AGENCY.

NO.	DATE	REVISION	APP.

FOR INTERIM REVIEW ONLY NOT INTENDED FOR PERMIT, BIDDING OR CONSTRUCTION PURPOSES.
ENGINEER:
HOSS FOROUZAN
P.E. SERIAL NO.77748
05/18/2026

GAI
Gupta & Associates, Inc.
CONSULTING ENGINEERING
Registration No. F-2593
302 Dennis St.,
Houston, Texas 77006
Tel: 713-636-2916
Fax: 713-636-2987
email: hforouzan@gaiconsulting.com

IDS Engineering Group
13430 NW. Freeway
Suite 700
Houston, Tx. 77040
713.462.3178
TxEng Firm 2726
TxSurv Firm 10110700

CITY OF HOUSTON
HOUSTON PUBLIC WORKS

LIFT STATION RENEWAL AND REPLACEMENT FY 2023

SCOTT NO.3 LIFT STATION CONTROL PANEL EQUIPMENT LAYOUT

WBS NUMBER	FOR CITY OF HOUSTON USE ONLY
R-000267-0179-4	
DRAWING SCALE	
HORIZ: NONE VERT: NONE	
CITY OF HOUSTON PM	
NAWARAJ PANTA, P.E.	
DWG. NO. SCT-I-06	SHEET NO. 161 OF 361

IDS JOB No. 0057-085-00

FILE PATH: O:\H8108_Lift Station Rehabilitation And Reconstruction (IDS)\6 Drawings\Instrumentation And Control\Working\Scott #3\H8108_SCT-I-06.dwg

PLOTTED: 5/12/2026 9:01 PM

FILE PATH: O:\H8108_Lift Station Rehabilitation And Reconstruction (IDS)\6 Drawings\Instrumentation And Control\Working\Scott #3\H8108_SCT-I-07.dwg

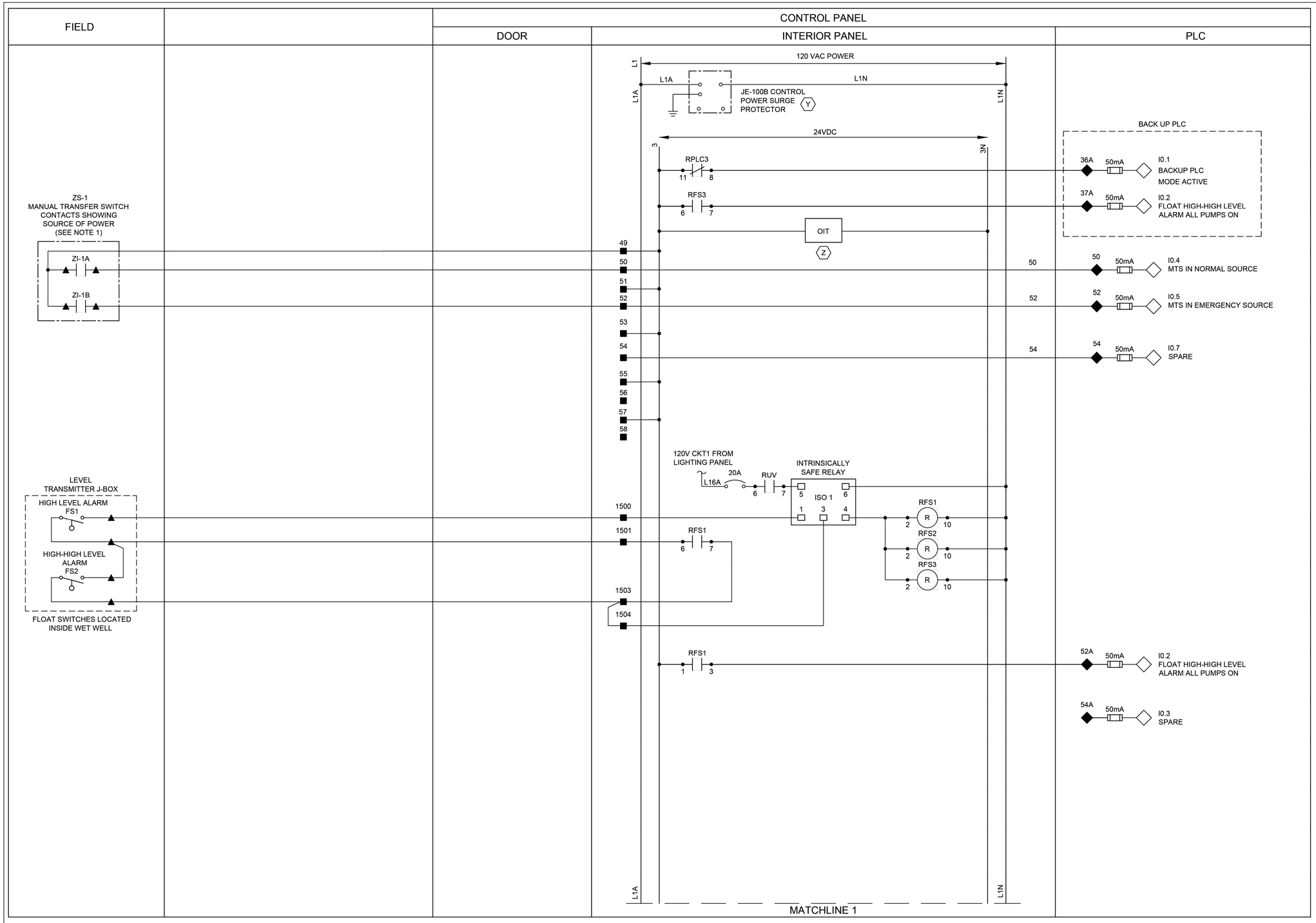

LEGEND

- △ DEVICE OR FIELD TERMINAL LOCATED AT MOTOR
- ✳ DEVICE OR FIELD TERMINAL LOCATED REMOTE
- □ DEVICE OR FIELD TERMINAL LOCATED AT MCC/POWER PANEL
- ■ FIELD TERMINAL LOCATED AT CONTROL PANEL
- ▲ REMOTE TERMINAL
- ● DEVICE TERMINAL NO.
- ◆ PLC INTERFACE TERMINAL

NOTES:

1. PROVIDE MANUAL TRANSFER SWITCH AND GENERATOR DRY CONTACT.
2. ALL FLOAT CONTROL CIRCUIT WIRES COLOR SHALL BE YELLOW.

GENERAL NOTES:

1. NO ELECTRICAL MATERIAL, APPARATUS, DEVICES, APPLIANCES, FIXTURES, OR EQUIPMENT SHALL BE SOLD OR INSTALLED IN THE CITY UNLESS THEY ARE IN CONFORMANCE WITH THE PROVISIONS OF SECTION 508 CITY OF HOUSTON ELECTRICAL CODE, THE LAWS OF THE STATE OF TEXAS AND ANY APPLICABLE RULES AND REGULATIONS ISSUED UNDER THE AUTHORITY OF THE STATE STATUES. THE MAKER'S NAME, TRADEMARK, OR OTHER IDENTIFICATION SYMBOL SHALL BE PLACED ON ALL ELECTRICAL MATERIALS, APPARATUS, DEVICES, APPLIANCES, FIXTURES, AND EQUIPMENT USED OR INSTALLED UNDER THE PROVISIONS OF THIS CODE. ALL ELECTRICAL MATERIALS AND EQUIPMENT SHALL BE LISTED AND LABELED FOR THE INTENDED USE AND SHALL BE INCLUDED IN A LIST PUBLISHED BY AN APPROVAL AGENCY.

NO.	DATE	REVISION	APP.

FOR INTERIM REVIEW
ONLY NOT INTENDED FOR
PERMIT, BIDDING OR
CONSTRUCTION PURPOSES.
ENGINEER:
HOSS FOROUZAN
P.E. SERIAL NO.77748
05/18/2026

GAI
Gupta & Associates, Inc.
CONSULTING ENGINEERING
Registration No. F-2593
302 Dennis St.,
Houston, Texas 77006
Tel: 713-636-2936
Fax: 713-636-2987
email: hforouzan@gaiconsulting.com

IDS Engineering Group
13430 NW. Freeway
Suite 700
Houston, Tx. 77040
713.462.3178
TxEng Firm 2726
TxSurv Firm 10110700

CITY OF HOUSTON
HOUSTON PUBLIC WORKS

LIFT STATION RENEWAL
AND REPLACEMENT FY 2023

SCOTT NO.3 LIFT STATION
CONTROL PANEL
CONTROL WIRING DIAGRAM-I

WBS NUMBER	FOR CITY OF HOUSTON USE ONLY
R-000267-0179-4	
DRAWING SCALE	
HORIZ: NONE VERT: NONE	
CITY OF HOUSTON PM	
NAWARAJ PANTA, P.E.	
DWG. NO. SCT-I-07	SHEET NO. 162 OF 361

IDS JOB No. 0057-085-00

PLOTTED: 5/12/2026 9:01 PM
FILE PATH: O:\H8108_Lift Station Rehabilitation And Reconstruction (IDS)\6 Drawings\Instrumentation And Control\Working\Scott #3\H8108_SCT-I-08.dwg

FIELD	MOTOR CONTROL CENTER (INDOOR)	CONTROL PANEL	
		DOOR	INTERIOR PANEL

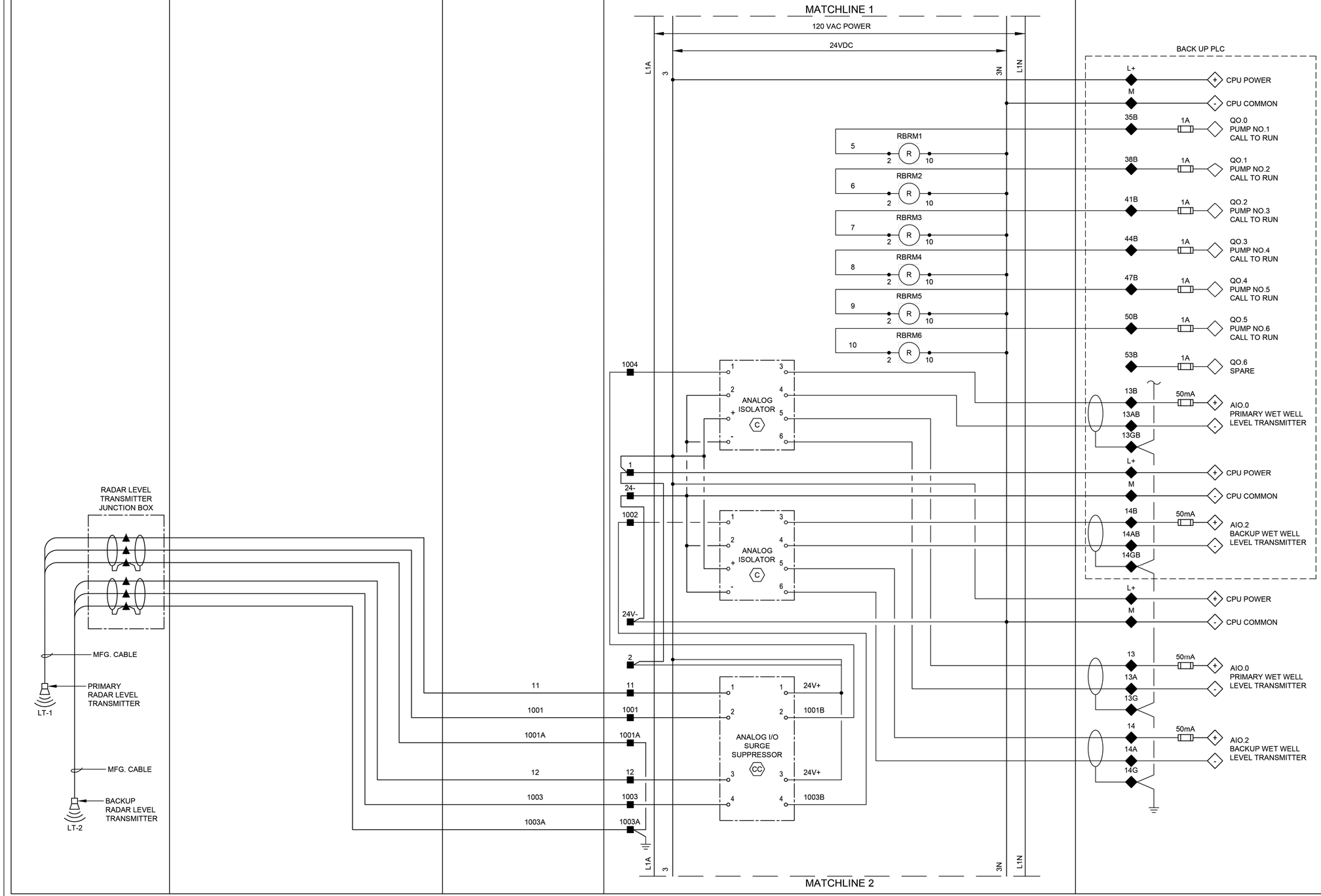

LEGEND

- △ DEVICE OR FIELD TERMINAL LOCATED AT MOTOR
- ✳ DEVICE OR FIELD TERMINAL LOCATED REMOTE
- □ DEVICE OR FIELD TERMINAL LOCATED AT MCC/POWER PANEL
- ■ FIELD TERMINAL LOCATED AT CONTROL PANEL
- ▲ REMOTE TERMINAL
- ● DEVICE TERMINAL NO.
- ◆ PLC INTERFACE TERMINAL

GENERAL NOTES:

1. NO ELECTRICAL MATERIAL, APPARATUS, DEVICES, APPLIANCES, FIXTURES, OR EQUIPMENT SHALL BE SOLD OR INSTALLED IN THE CITY UNLESS THEY ARE IN CONFORMANCE WITH THE PROVISIONS OF SECTION 508 CITY OF HOUSTON ELECTRICAL CODE, THE LAWS OF THE STATE OF TEXAS AND ANY APPLICABLE RULES AND REGULATIONS ISSUED UNDER THE AUTHORITY OF THE STATE STATUES. THE MAKER'S NAME, TRADEMARK, OR OTHER IDENTIFICATION SYMBOL SHALL BE PLACED ON ALL ELECTRICAL MATERIALS, APPARATUS, DEVICES, APPLIANCES, FIXTURES, AND EQUIPMENT USED OR INSTALLED UNDER THE PROVISIONS OF THIS CODE. ALL ELECTRICAL MATERIALS AND EQUIPMENT SHALL BE LISTED AND LABELED FOR THE INTENDED USE AND SHALL BE INCLUDED IN A LIST PUBLISHED BY AN APPROVAL AGENCY.

NO.	DATE	REVISION	APP.

FOR INTERIM REVIEW
ONLY NOT INTENDED FOR
PERMIT, BIDDING OR
CONSTRUCTION PURPOSES.
ENGINEER:
HOSS FOROUZAN
P.E. SERIAL NO.77748
05/18/2026

GAI
Gupta & Associates, Inc.
CONSULTING ENGINEERING
Registration No. F-2593
302 Dennis St.,
Houston, Texas 77006
Tel: 713-636-2936
Fax: 713-636-2987
email: hforouzan@gaiconsulting.com

IDS Engineering Group
13430 NW. Freeway
Suite 700
Houston, Tx. 77040
713.462.3178
TxEng Firm 2726
TxSurv Firm 10110700

CITY OF HOUSTON
HOUSTON PUBLIC WORKS

LIFT STATION RENEWAL
AND REPLACEMENT FY 2023

SCOTT NO.3 LIFT STATION CONTROL PANEL CONTROL WIRING DIAGRAM—II

WBS NUMBER	FOR CITY OF HOUSTON USE ONLY
R-000267-0179-4	
DRAWING SCALE	
HORIZ: NONE VERT: NONE	
CITY OF HOUSTON PM	
NAWARAJ PANTA, P.E.	
DWG. NO. SCT-I-08	SHEET NO. 163 OF 361

IDS JOB No. 0057-085-00

PLOTTED: 5/12/2026 9:01 PM

FILE PATH: O:\H8108_Lift Station Rehabilitation And Reconstruction (IDS)\6 Drawings\Instrumentation And Control\Working\Scott #3\H8108_SCT-I-09.dwg

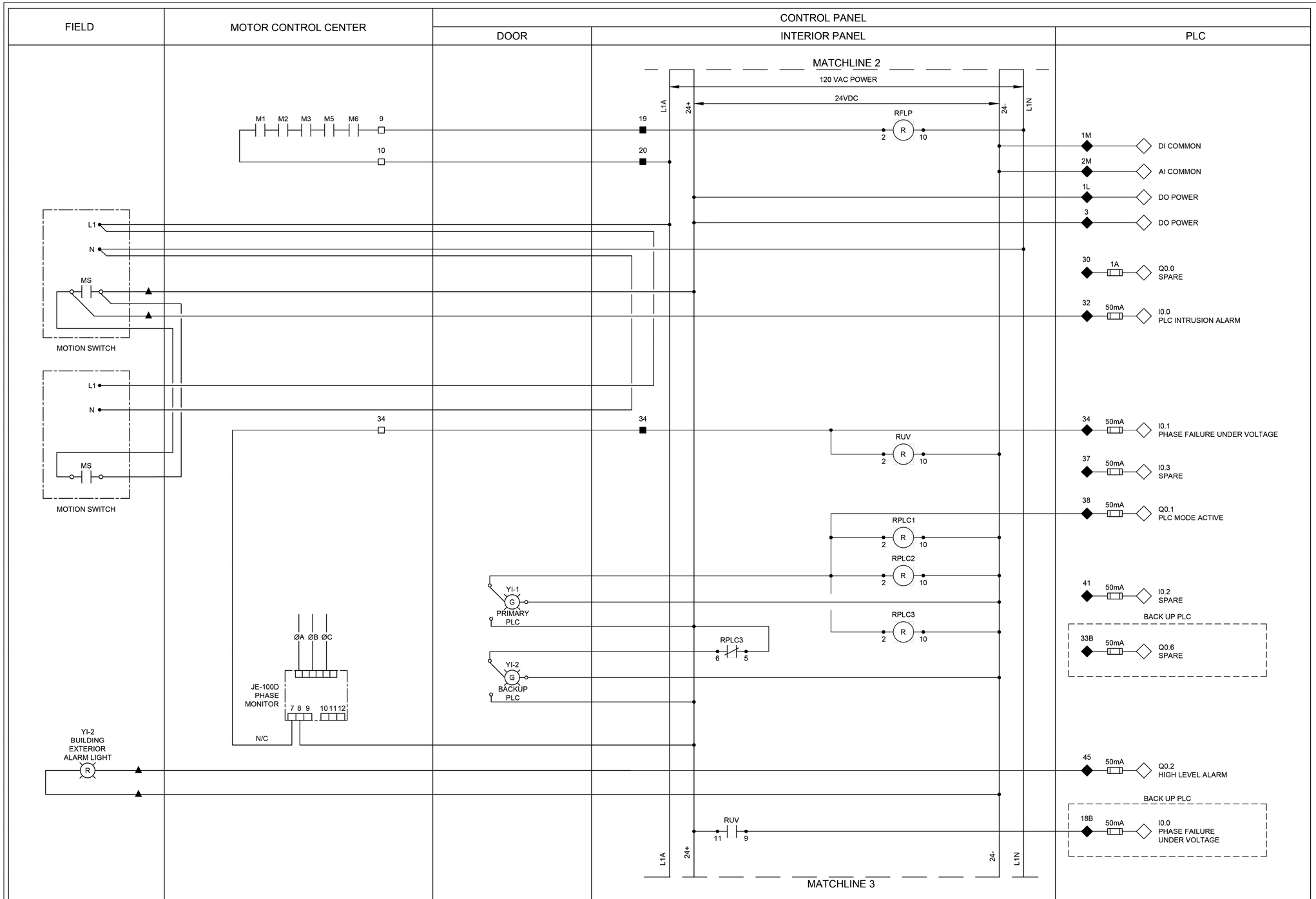

LEGEND

- △ DEVICE OR FIELD TERMINAL LOCATED AT MOTOR
- ✳ DEVICE OR FIELD TERMINAL LOCATED REMOTE
- □ DEVICE OR FIELD TERMINAL LOCATED AT MCC/POWER PANEL
- ■ FIELD TERMINAL LOCATED AT CONTROL PANEL
- ▲ REMOTE TERMINAL
- ● DEVICE TERMINAL NO.
- ◆ PLC INTERFACE TERMINAL

NO.	DATE	REVISION	APP.

GENERAL NOTES:

1. NO ELECTRICAL MATERIAL, APPARATUS, DEVICES, APPLIANCES, FIXTURES, OR EQUIPMENT SHALL BE SOLD OR INSTALLED IN THE CITY UNLESS THEY ARE IN CONFORMANCE WITH THE PROVISIONS OF SECTION 508 CITY OF HOUSTON ELECTRICAL CODE, THE LAWS OF THE STATE OF TEXAS AND ANY APPLICABLE RULES AND REGULATIONS ISSUED UNDER THE AUTHORITY OF THE STATE STATUES. THE MAKER'S NAME, TRADEMARK, OR OTHER IDENTIFICATION SYMBOL SHALL BE PLACED ON ALL ELECTRICAL MATERIALS, APPARATUS, DEVICES, APPLIANCES, FIXTURES, AND EQUIPMENT USED OR INSTALLED UNDER THE PROVISIONS OF THIS CODE. ALL ELECTRICAL MATERIALS AND EQUIPMENT SHALL BE LISTED AND LABELED FOR THE INTENDED USE AND SHALL BE INCLUDED IN A LIST PUBLISHED BY AN APPROVAL AGENCY.

FOR INTERIM REVIEW
ONLY NOT INTENDED FOR
PERMIT, BIDDING OR
CONSTRUCTION PURPOSES.
ENGINEER:
HOSS FOROUZAN
P.E. SERIAL NO.77748
05/18/2026

GAI
Gupta & Associates, Inc.
CONSULTING ENGINEERING
Registration No. F-2593
302 Dennis St.,
Houston, Texas 77006
Tel: 713-636-2936
Fax: 713-636-2987
email: hforouzan@gaiconsulting.com

IDS Engineering Group
13430 NW. Freeway
Suite 700
Houston, Tx. 77040
713.462.3178
TxEng Firm 2726
TxSurv Firm 10110700

CITY OF HOUSTON
HOUSTON PUBLIC WORKS

LIFT STATION RENEWAL AND REPLACEMENT FY 2023

SCOTT NO.3 LIFT STATION CONTROL PANEL CONTROL WIRING DIAGRAM—III

WBS NUMBER	FOR CITY OF HOUSTON USE ONLY
R-000267-0179-4	
DRAWING SCALE	
HORIZ: NONE VERT: NONE	
CITY OF HOUSTON PM	
NAWARAJ PANTA, P.E.	
DWG. NO. SCT-I-09	SHEET NO. 164 OF 361

IDS JOB No. 0057-085-00

PLOTTED: 5/12/2026 9:01 PM

FILE PATH: O:\H8108_Lift Station Rehabilitation And Reconstruction (IDS)\6 Drawings\Instrumentation And Control\Working\Scott #3\H8108_SCT-I-10.dwg

FIELD | MOTOR CONTROL CENTER | CONTROL PANEL (DOOR | INTERIOR PANEL | PLC)

WET PUMP NO.W1
T1 T2 T3 G
A B C
4-20mA CURRENT TRANSDUCER
GCT
SSRV1
M1 CB MCP
MCC CKT 2
CT
1A 1A
CPT - 480-120VAC 1PH, 250VA MIN
X1-1 3A X2-1
TDLP1 TD 2 10
HS-1B H O A
869 SSCR1 X0 CR1 0X M1 X0
TDLP1F TD 2 10
SSCR1 R 2 10
SSRVR1 R 2 10
SSRV NO. 1 CONTROLLER BOARD
RUN
START/ STOP
FAULT
ALARM
KEYPAD
M1 CR1
M1 SSRVR1 14 15
SSRVR1 30 31 32
MULTILIN (MMR-869) IE-1
Aϕ Bϕ Cϕ VA VN VB VN VC VN
M1 SSRVR1 33 20 21
TDLP1 16 17
M1 18 19
22 23
34 35
26 29
0.5A
CPT - 120-24VAC 1PH, 50VA
3A
LSH-1 SEAL LEAK DETECTOR
TSH-1 MOTOR TEMP SWITCH
TERMINAL JUNCTION BOX
20 21 22 23
120 121 122 123
LAH-1 SL1
TAH-1 MTH1
RESET
PUMP PROTECTION MODULE
HS-1A RESET
TO SHEET SCT-I-11

24 VDC POWER
24+ 24-
124 125
TBP1 SEE NOTE 2
6 3P1
3N1
102 103
HS-1 H-O-A
101 RMTH1 102 RMSL1
100 RPLMP1
104 RM1
RPLC1 106 RBRM1
RPLC1 107 RPLMP1
127 126 127 RFS2
109 109
114 115 RM1
RMSL1
3P1 116 116
YI-1
3P1 RRST1 116A RMTH1 116B RMTH1
117 118 RRST1
3P1 3P1 RRST1 118
RRST1 RMSL1 11 8 11 9 119
RMSL1
TO 219 ON SHEET SCT-I-11
RMTH1 11 9 RRST1 6 7

112 50mA AI0.8 WET PUMP NO.W1 MOTOR CURRENT
100 1A Q0.7 WET PUMP NO.W1 CALL TO RUN
114 50mA I3.1 WET PUMP NO.W1 IN HAND
115 50mA I3.0 WET PUMP NO.W1 IN AUTO
122 50mA I6.0 WET PUMP NO.W1 IN SOFT STARTER MODE
121 50mA I3.2 WET PUMP NO.W1 SEAL FAILURE ALARM
113 50mA I0.7 WET PUMP NO.W1 ON/OFF
117 50mA I3.3 WET PUMP NO.W1 MOTOR OVERLOAD ALARM
118 50mA I0.6 ALARMS RESET
119 1A Q0.4 ALARMS RESET
120 50mA I1.1 WET PUMP NO.W1 HIGH TEMPERATURE ALARM

LEGEND

△ DEVICE OR FIELD TERMINAL LOCATED AT MOTOR
✳ DEVICE OR FIELD TERMINAL LOCATED REMOTE
□ DEVICE OR FIELD TERMINAL LOCATED AT MCC/POWER PANEL
■ FIELD TERMINAL LOCATED AT CONTROL PANEL
▲ REMOTE TERMINAL
● DEVICE TERMINAL NO.
◆ PLC INTERFACE TERMINAL

NOTES:

1. MOTOR OVERLOAD RELAY OUTPUT CONTACT SHOWN NORMALLY CLOSED WHEN RELAY IS DE-ENERGIZED, OPEN WHEN ENERGIZED, AND CLOSED WHEN IN ALARM. VERIFY OPERATION OF RELAY PROVIDED AND ADJUST CONNECTION OF RMOR AUXILIARY RELAYS.
2. FUSED TERMINAL ON TERMINAL BLOCK TB4 SEE CONTROL POWER AND COMMUNICATION WIRING DIAGRAM DRAWING NO. SCT-I-3.
3. ALL FLOAT CONTROL CIRCUIT WIRES COLOR SHALL BE YELLOW.

GENERAL NOTES:

1. NO ELECTRICAL MATERIAL, APPARATUS, DEVICES, APPLIANCES, FIXTURES, OR EQUIPMENT SHALL BE SOLD OR INSTALLED IN THE CITY UNLESS THEY ARE IN CONFORMANCE WITH THE PROVISIONS OF SECTION 508 CITY OF HOUSTON ELECTRICAL CODE, THE LAWS OF THE STATE OF TEXAS AND ANY APPLICABLE RULES AND REGULATIONS ISSUED UNDER THE AUTHORITY OF THE STATE STATUES. THE MAKER'S NAME, TRADEMARK, OR OTHER IDENTIFICATION SYMBOL SHALL BE PLACED ON ALL ELECTRICAL MATERIALS, APPARATUS, DEVICES, APPLIANCES, FIXTURES, AND EQUIPMENT USED OR INSTALLED UNDER THE PROVISIONS OF THIS CODE. ALL ELECTRICAL MATERIALS AND EQUIPMENT SHALL BE LISTED AND LABELED FOR THE INTENDED USE AND SHALL BE INCLUDED IN A LIST PUBLISHED BY AN APPROVAL AGENCY.

NO.	DATE	REVISION	APP.

FOR INTERIM REVIEW
ONLY NOT INTENDED FOR
PERMIT, BIDDING OR
CONSTRUCTION PURPOSES.
ENGINEER:
HOSS FOROUZAN
P.E. SERIAL NO.77748
05/18/2026

GAI
Gupta & Associates, Inc.
CONSULTING ENGINEERING
Registration No. F-2593
302 Dennis St.,
Houston, Texas 77006
Tel: 713-636-2936
Fax: 713-636-2987
email: hforouzan@gaiconsulting.com

IDS Engineering Group
13430 NW. Freeway
Suite 700
Houston, Tx. 77040
713.462.3178
TxEng Firm 2726
TxSurv Firm 10110700

CITY OF HOUSTON
HOUSTON PUBLIC WORKS

LIFT STATION RENEWAL
AND REPLACEMENT FY 2023

SCOTT NO.3 LIFT STATION PUMP NO.W1 CONTROL WIRING DIAGRAM

WBS NUMBER	FOR CITY OF HOUSTON USE ONLY
R-000267-0179-4	
DRAWING SCALE	
HORIZ: NONE VERT: NONE	
CITY OF HOUSTON PM	
NAWARAJ PANTA, P.E.	

DWG. NO.	SHEET NO.
SC-I-10	165 OF 361

IDS JOB No. 0057-085-00

PLOTTED: 5/12/2026 9:01 PM

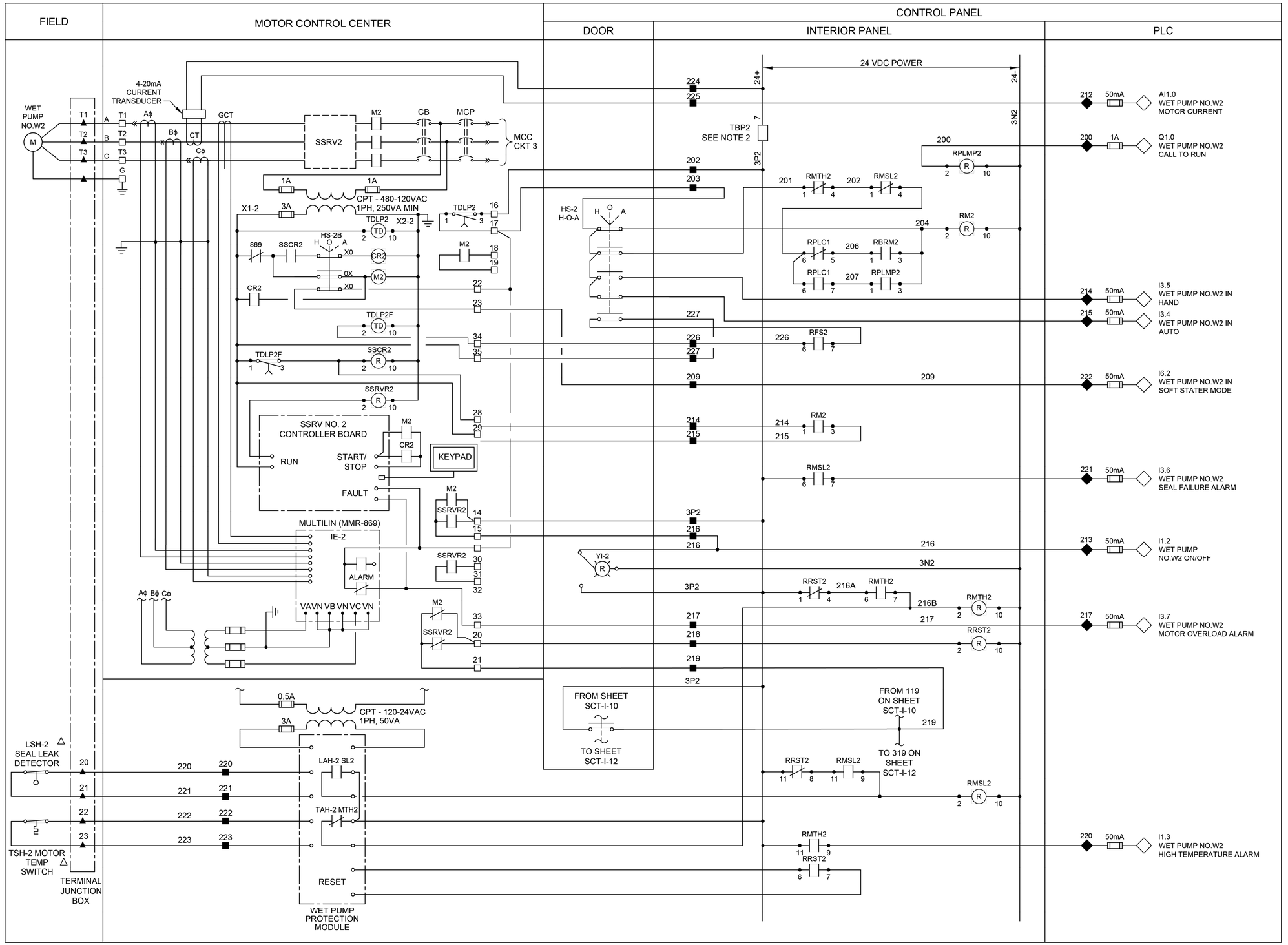

LEGEND

- △ DEVICE OR FIELD TERMINAL LOCATED AT MOTOR
- ✳ DEVICE OR FIELD TERMINAL LOCATED REMOTE
- □ DEVICE OR FIELD TERMINAL LOCATED AT MCC/POWER PANEL
- ■ FIELD TERMINAL LOCATED AT CONTROL PANEL
- ▲ REMOTE TERMINAL
- ● DEVICE TERMINAL NO.
- ◆ PLC INTERFACE TERMINAL

NOTES:

1. MOTOR OVERLOAD RELAY OUTPUT CONTACT SHOWN NORMALLY CLOSED WHEN RELAY IS DE-ENERGIZED, OPEN WHEN ENERGIZED, AND CLOSED WHEN IN ALARM. VERIFY OPERATION OF RELAY PROVIDED AND ADJUST CONNECTION OF RMOR AUXILIARY RELAYS.
2. FUSED TERMINAL ON TERMINAL BLOCK TB4 SEE CONTROL POWER AND COMMUNICATION WIRING DIAGRAM DRAWING NO. SCT-I-3.
3. ALL FLOAT CONTROL CIRCUIT WIRES COLOR SHALL BE YELLOW.

GENERAL NOTES:

1. NO ELECTRICAL MATERIAL, APPARATUS, DEVICES, APPLIANCES, FIXTURES, OR EQUIPMENT SHALL BE SOLD OR INSTALLED IN THE CITY UNLESS THEY ARE IN CONFORMANCE WITH THE PROVISIONS OF SECTION 508 CITY OF HOUSTON ELECTRICAL CODE, THE LAWS OF THE STATE OF TEXAS AND ANY APPLICABLE RULES AND REGULATIONS ISSUED UNDER THE AUTHORITY OF THE STATE STATUTES. THE MAKER'S NAME, TRADEMARK, OR OTHER IDENTIFICATION SYMBOL SHALL BE PLACED ON ALL ELECTRICAL MATERIALS, APPARATUS, DEVICES, APPLIANCES, FIXTURES, AND EQUIPMENT USED OR INSTALLED UNDER THE PROVISIONS OF THIS CODE. ALL ELECTRICAL MATERIALS AND EQUIPMENT SHALL BE LISTED AND LABELED FOR THE INTENDED USE AND SHALL BE INCLUDED IN A LIST PUBLISHED BY AN APPROVAL AGENCY.

NO.	DATE	REVISION	APP.

FOR INTERIM REVIEW
ONLY NOT INTENDED FOR
PERMIT, BIDDING OR
CONSTRUCTION PURPOSES.
ENGINEER:
HOSS FOROUZAN
P.E. SERIAL NO.77748
05/18/2026

GAI
Gupta & Associates, Inc.
CONSULTING ENGINEERING
Registration No. F-2593
302 Dennis St.,
Houston, Texas 77006
Tel: 713-636-2936
Fax: 713-636-2987
email: hforouzan@gaiconsulting.com

IDS Engineering Group
13430 NW. Freeway
Suite 700
Houston, Tx. 77040
713.462.3178
TxEng Firm 2726
TxSurv Firm 10110700

CITY OF HOUSTON
HOUSTON PUBLIC WORKS

LIFT STATION RENEWAL AND REPLACEMENT FY 2023

SCOTT NO.3 LIFT STATION WET PUMP NO.W2 CONTROL WIRING DIAGRAM

WBS NUMBER	FOR CITY OF HOUSTON USE ONLY
R-000267-0179-4	
DRAWING SCALE	
HORIZ: NONE VERT: NONE	
CITY OF HOUSTON PM	
NAWARAJ PANTA, P.E.	
DWG. NO. SC-I-11	SHEET NO. 166 OF 361

IDS JOB No. 0057-085-00

FILE PATH: O:\H8108_Lift Station Rehabilitation And Reconstruction (IDS)\6 Drawings\Instrumentation And Control\Working\Scott #3\H8108_SCT-I-11.dwg

PLOTTED: 5/12/2026 9:01 PM

FILE PATH: O:\H8108_Lift Station Rehabilitation And Reconstruction (IDS)\6 Drawings\Instrumentation And Control\Working\Scott #3\H8108_SCT-I-12.dwg

FIELD | MOTOR CONTROL CENTER | CONTROL PANEL (DOOR | INTERIOR PANEL | PLC)

WET PUMP NO.W3
4-20mA CURRENT TRANSDUCER
GCT
SSRV3
M3
CB
MCP
MCC CKT 4
CPT - 480-120VAC 1PH, 250VA MIN
CPT - 120-24VAC 1PH, 50VA
TDLP3
TDLP3F
HS-3B
HS-3 H-O-A
SSCR1
CR3
SSRVR3
SSRV NO. 3 CONTROLLER BOARD
RUN
START/ STOP
FAULT
KEYPAD
MULTILIN (MMR-869) IE-3
ALARM
VAVN VB VN VC VN
TBP3 SEE NOTE 2
24 VDC POWER
RPLMP3
RMTH3
RMSL3
RM3
RPLC1
RBRM3
RFS2
YI-3
RRST3
LSH-3 SEAL LEAK DETECTOR
TSH-3 MOTOR TEMP SWITCH
TERMINAL JUNCTION BOX
LAH-3 SL3
TAH-3 MTH3
RESET
WET PUMP PROTECTION MODULE
FROM SHEET SCT-I-11
TO SHEET SCT-I-13
FROM 219 ON SHEET SCT-I-11
TO 419 ON SHEET SCT-I-13

312	50mA	AI1.2 WET PUMP NO.W3 MOTOR CURRENT
300	1A	Q1.1 WET PUMP NO.W3 CALL TO RUN
314	50mA	I4.0 WET PUMP NO.W3 IN HAND
315	50mA	I4.1 WET PUMP NO.W3 IN AUTO
322	50mA	I6.2 WET PUMP NO.W3 IN SOFT STARTER MODE
321	50mA	I4.2 WET PUMP NO.W3 SEAL FAILURE ALARM
313	50mA	I1.4 WET PUMP NO.W3 ON/OFF
317	50mA	I4.3 WET PUMP NO.W3 MOTOR OVERLOAD ALARM
320	50mA	I1.5 WET PUMP NO.W3 HIGH TEMPERATURE ALARM

LEGEND

- △ DEVICE OR FIELD TERMINAL LOCATED AT MOTOR
- ✳ DEVICE OR FIELD TERMINAL LOCATED REMOTE
- □ DEVICE OR FIELD TERMINAL LOCATED AT MCC/POWER PANEL
- ■ FIELD TERMINAL LOCATED AT CONTROL PANEL
- ▲ REMOTE TERMINAL
- ● DEVICE TERMINAL NO.
- ◆ PLC INTERFACE TERMINAL

NOTES:

1. MOTOR OVERLOAD RELAY OUTPUT CONTACT SHOWN NORMALLY CLOSED WHEN RELAY IS DE-ENERGIZED, OPEN WHEN ENERGIZED, AND CLOSED WHEN IN ALARM. VERIFY OPERATION OF RELAY PROVIDED AND ADJUST CONNECTION OF RMOR AUXILIARY RELAYS.
2. FUSED TERMINAL ON TERMINAL BLOCK TB4 SEE CONTROL POWER AND COMMUNICATION WIRING DIAGRAM DRAWING NO. SCT-I-3.
3. ALL FLOAT CONTROL CIRCUIT WIRES COLOR SHALL BE YELLOW.

GENERAL NOTES:

1. NO ELECTRICAL MATERIAL, APPARATUS, DEVICES, APPLIANCES, FIXTURES, OR EQUIPMENT SHALL BE SOLD OR INSTALLED IN THE CITY UNLESS THEY ARE IN CONFORMANCE WITH THE PROVISIONS OF SECTION 508 CITY OF HOUSTON ELECTRICAL CODE, THE LAWS OF THE STATE OF TEXAS AND ANY APPLICABLE RULES AND REGULATIONS ISSUED UNDER THE AUTHORITY OF THE STATE STATUES. THE MAKER'S NAME, TRADEMARK, OR OTHER IDENTIFICATION SYMBOL SHALL BE PLACED ON ALL ELECTRICAL MATERIALS, APPARATUS, DEVICES, APPLIANCES, FIXTURES, AND EQUIPMENT USED OR INSTALLED UNDER THE PROVISIONS OF THIS CODE. ALL ELECTRICAL MATERIALS AND EQUIPMENT SHALL BE LISTED AND LABELED FOR THE INTENDED USE AND SHALL BE INCLUDED IN A LIST PUBLISHED BY AN APPROVAL AGENCY.

NO.	DATE	REVISION	APP.

FOR INTERIM REVIEW
ONLY NOT INTENDED FOR
PERMIT, BIDDING OR
CONSTRUCTION PURPOSES.
ENGINEER:
HOSS FOROUZAN
P.E. SERIAL NO.77748
05/18/2026

GAI
Gupta & Associates, Inc.
CONSULTING ENGINEERING
Registration No. F-2593
302 Dennis St.,
Houston, Texas 77006
Tel: 713-636-2936
Fax: 713-636-2987
email: hforouzan@gaiconsulting.com

IDS Engineering Group
13430 NW. Freeway
Suite 700
Houston, Tx. 77040
713.462.3178
TxEng Firm 2726
TxSurv Firm 10110700

CITY OF HOUSTON
HOUSTON PUBLIC WORKS

LIFT STATION RENEWAL AND REPLACEMENT FY 2023

SCOTT NO.W3 LIFT STATION WET PUMP NO.W3 CONTROL WIRING DIAGRAM

WBS NUMBER	FOR CITY OF HOUSTON USE ONLY
R-000267-0179-4	
DRAWING SCALE	
HORIZ: NONE VERT: NONE	
CITY OF HOUSTON PM	
NAWARAJ PANTA, P.E.	
SHEET NO. 167 OF 361	

DWG. NO. SC-I-12

IDS JOB No. 0057-085-00

PLOTTED: 5/12/2026 9:01 PM

FILE PATH: O:\H8108_Lift Station Rehabilitation And Reconstruction (IDS)\6 Drawings\Instrumentation And Control\Working\Scott #3\H8108_SCT-I-13.dwg

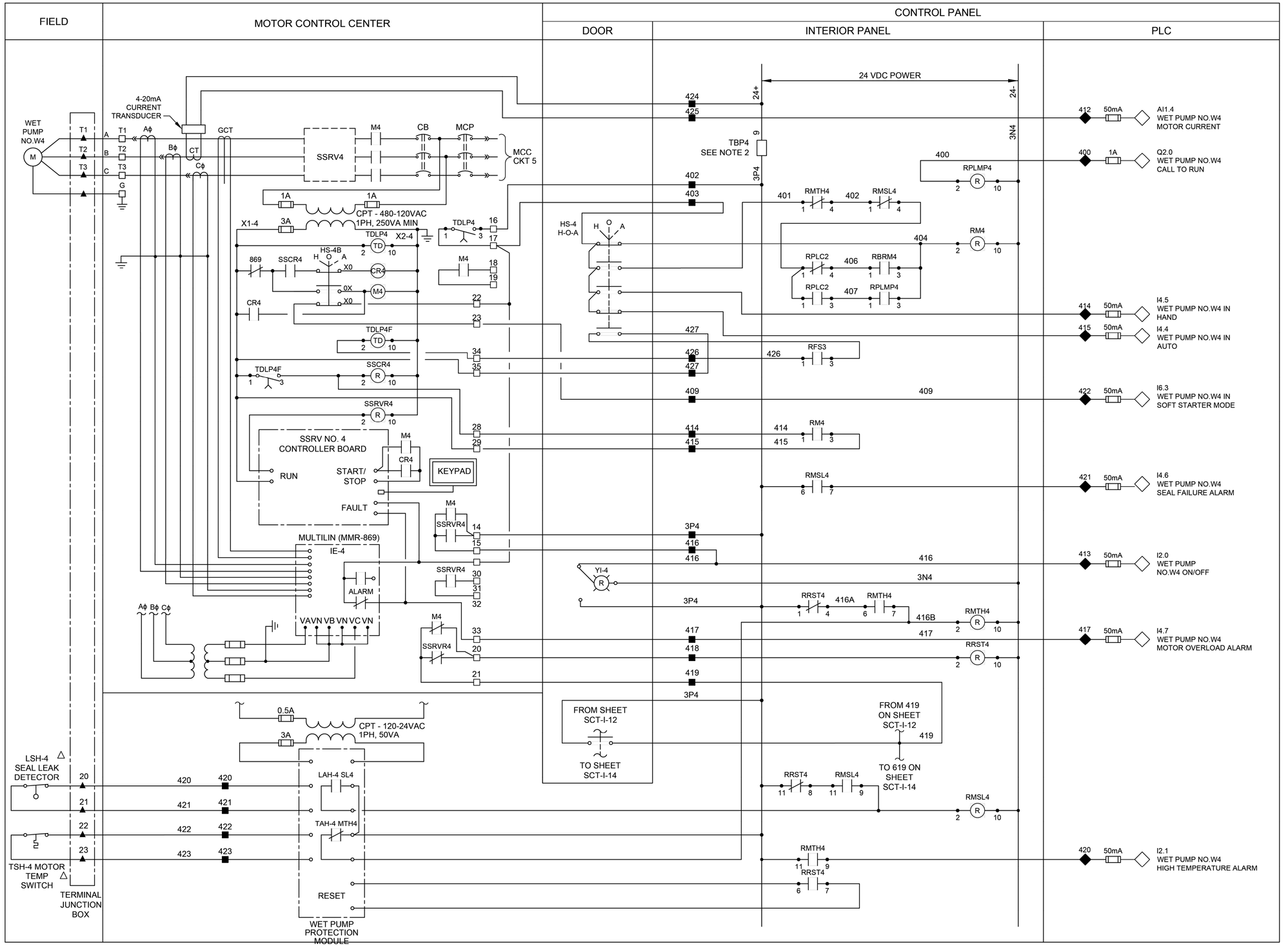

△ DEVICE OR FIELD TERMINAL LOCATED AT MOTOR
✳ DEVICE OR FIELD TERMINAL LOCATED REMOTE
□ DEVICE OR FIELD TERMINAL LOCATED AT MCC/POWER PANEL
■ FIELD TERMINAL LOCATED AT CONTROL PANEL
▲ REMOTE TERMINAL
● DEVICE TERMINAL NO.
◆ PLC INTERFACE TERMINAL

NOTES:

1. MOTOR OVERLOAD RELAY OUTPUT CONTACT SHOWN NORMALLY CLOSED WHEN RELAY IS DE-ENERGIZED, OPEN WHEN ENERGIZED, AND CLOSED WHEN IN ALARM. VERIFY OPERATION OF RELAY PROVIDED AND ADJUST CONNECTION OF RMOR AUXILIARY RELAYS.
2. FUSED TERMINAL ON TERMINAL BLOCK TB4 SEE CONTROL POWER AND COMMUNICATION WIRING DIAGRAM DRAWING NO. SCT-I-3.
3. ALL FLOAT CONTROL CIRCUIT WIRES COLOR SHALL BE YELLOW.

GENERAL NOTES:

1. NO ELECTRICAL MATERIAL, APPARATUS, DEVICES, APPLIANCES, FIXTURES, OR EQUIPMENT SHALL BE SOLD OR INSTALLED IN THE CITY UNLESS THEY ARE IN CONFORMANCE WITH THE PROVISIONS OF SECTION 508 CITY OF HOUSTON ELECTRICAL CODE, THE LAWS OF THE STATE OF TEXAS AND ANY APPLICABLE RULES AND REGULATIONS ISSUED UNDER THE AUTHORITY OF THE STATE STATUES. THE MAKER'S NAME, TRADEMARK, OR OTHER IDENTIFICATION SYMBOL SHALL BE PLACED ON ALL ELECTRICAL MATERIALS, APPARATUS, DEVICES, APPLIANCES, FIXTURES, AND EQUIPMENT USED OR INSTALLED UNDER THE PROVISIONS OF THIS CODE. ALL ELECTRICAL MATERIALS AND EQUIPMENT SHALL BE LISTED AND LABELED FOR THE INTENDED USE AND SHALL BE INCLUDED IN A LIST PUBLISHED BY AN APPROVAL AGENCY.

NO.	DATE	REVISION	APP.

FOR INTERIM REVIEW
ONLY NOT INTENDED FOR
PERMIT, BIDDING OR
CONSTRUCTION PURPOSES.
ENGINEER:
HOSS FOROUZAN
P.E. SERIAL NO.77748
05/18/2026

GAI
Gupta & Associates, Inc.
CONSULTING ENGINEERING
Registration No. F-2593
302 Dennis St.,
Houston, Texas 77006
Tel: 713-636-2936
Fax: 713-636-2987
email: hforouzan@gaiconsulting.com

IDS Engineering Group
13430 NW. Freeway
Suite 700
Houston, Tx. 77040
713.462.3178
TxEng Firm 2726
TxSurv Firm 10110700

CITY OF HOUSTON
HOUSTON PUBLIC WORKS

LIFT STATION RENEWAL AND REPLACEMENT FY 2023

SCOTT NO.3 LIFT STATION WET PUMP NO.W4 CONTROL WIRING DIAGRAM

WBS NUMBER	FOR CITY OF HOUSTON USE ONLY
R-000267-0179-4	
DRAWING SCALE	
HORIZ: NONE VERT: NONE	
CITY OF HOUSTON PM	
NAWARAJ PANTA, P.E.	
SHEET NO. 168 OF 361	

DWG. NO. SCT-I-13

IDS JOB No. 0057-085-00

PLOTTED: 5/12/2026 9:01 PM
FILE PATH: O:\H8108_Lift Station Rehabilitation And Reconstruction (IDS)\6 Drawings\Instrumentation And Control\Working\Scott #3\H8108_SCT-I-14.dwg

FIELD | MOTOR CONTROL CENTER | CONTROL PANEL — DOOR | INTERIOR PANEL | PLC

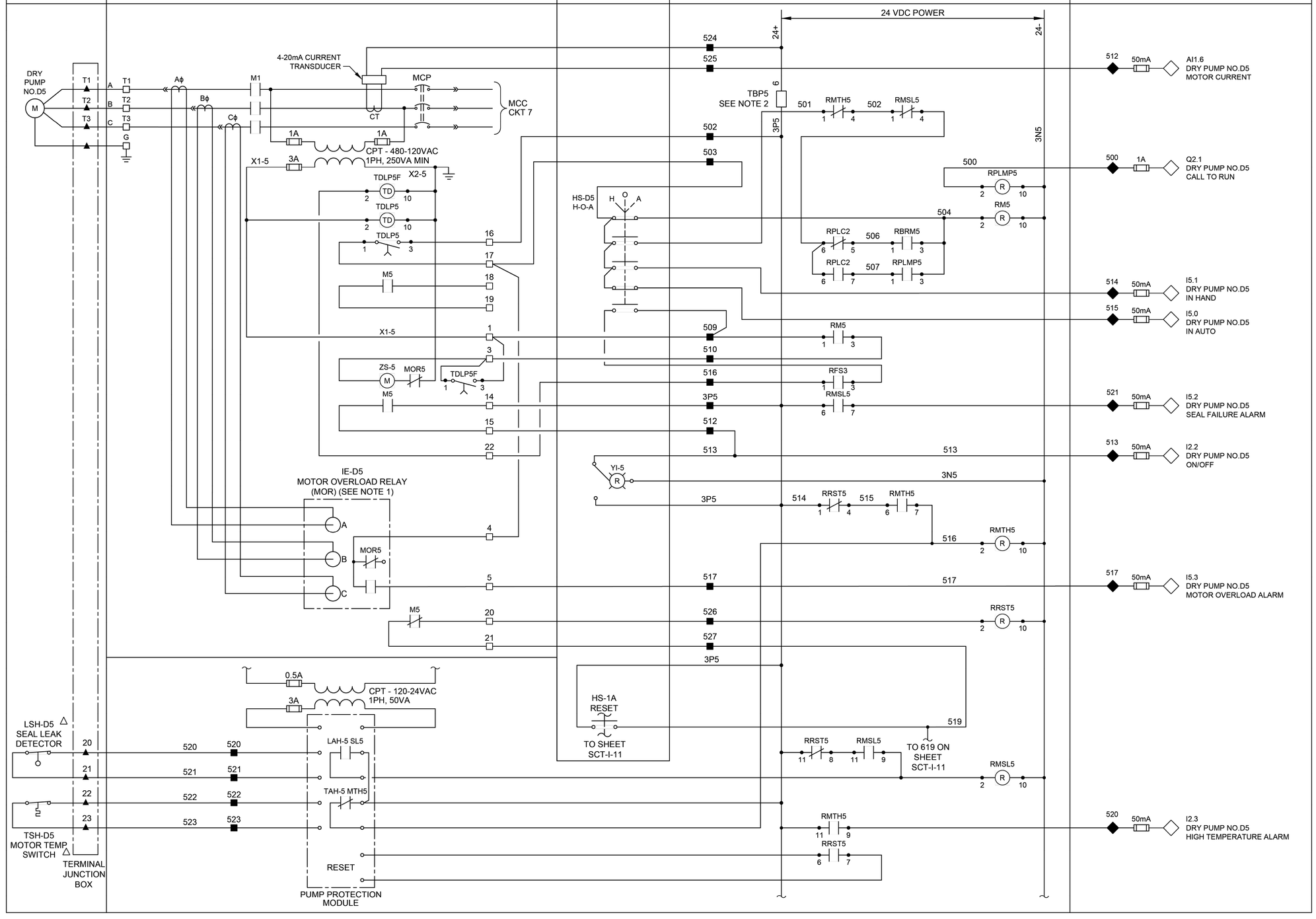

NOTES:

1. MOTOR OVERLOAD RELAY OUTPUT CONTACT SHOWN NORMALLY CLOSED WHEN RELAY IS DE-ENERGIZED, OPEN WHEN ENERGIZED, AND CLOSED WHEN IN ALARM. VERIFY OPERATION OF RELAY PROVIDED AND ADJUST CONNECTION OF RMOR AUXILIARY RELAYS.
2. FUSED TERMINAL ON TERMINAL BLOCK TB4 SEE CONTROL POWER AND COMMUNICATION WIRING DIAGRAM DRAWING NO. SCT-I-3.
3. ALL FLOAT CONTROL CIRCUIT WIRES COLOR SHALL BE YELLOW.

GENERAL NOTES:

1. NO ELECTRICAL MATERIAL, APPARATUS, DEVICES, APPLIANCES, FIXTURES, OR EQUIPMENT SHALL BE SOLD OR INSTALLED IN THE CITY UNLESS THEY ARE IN CONFORMANCE WITH THE PROVISIONS OF SECTION 508 CITY OF HOUSTON ELECTRICAL CODE, THE LAWS OF THE STATE OF TEXAS AND ANY APPLICABLE RULES AND REGULATIONS ISSUED UNDER THE AUTHORITY OF THE STATE STATUES. THE MAKER'S NAME, TRADEMARK, OR OTHER IDENTIFICATION SYMBOL SHALL BE PLACED ON ALL ELECTRICAL MATERIALS, APPARATUS, DEVICES, APPLIANCES, FIXTURES, AND EQUIPMENT USED OR INSTALLED UNDER THE PROVISIONS OF THIS CODE. ALL ELECTRICAL MATERIALS AND EQUIPMENT SHALL BE LISTED AND LABELED FOR THE INTENDED USE AND SHALL BE INCLUDED IN A LIST PUBLISHED BY AN APPROVAL AGENCY.

LEGEND

- △ DEVICE OR FIELD TERMINAL LOCATED AT MOTOR
- ✳ DEVICE OR FIELD TERMINAL LOCATED REMOTE
- □ DEVICE OR FIELD TERMINAL LOCATED AT MCC/POWER PANEL
- ■ FIELD TERMINAL LOCATED AT CONTROL PANEL
- ▲ REMOTE TERMINAL
- ● DEVICE TERMINAL NO.
- ◆ PLC INTERFACE TERMINAL

NO.	DATE	REVISION	APP.

FOR INTERIM REVIEW
ONLY NOT INTENDED FOR
PERMIT, BIDDING OR
CONSTRUCTION PURPOSES.
ENGINEER:
HOSS FOROUZAN
P.E. SERIAL NO.77748
05/18/2026

GAI
Gupta & Associates, Inc.
CONSULTING ENGINEERING
Registration No. F-2593
302 Dennis St.,
Houston, Texas 77006
Tel: 713-636-2936
Fax: 713-636-2987
email: hforouzan@gaiconsulting.com

IDS Engineering Group
13430 NW. Freeway
Suite 700
Houston, Tx. 77040
713.462.3178
TxEng Firm 2726
TxSurv Firm 10110700

CITY OF HOUSTON
HOUSTON PUBLIC WORKS

LIFT STATION RENEWAL AND REPLACEMENT FY 2023

SCOTT NO.3 LIFT STATION PUMP NO.D5 CONTROL WIRING DIAGRAM

WBS NUMBER	FOR CITY OF HOUSTON USE ONLY
R-000267-0179-4	
DRAWING SCALE	
HORIZ: NONE VERT: NONE	
CITY OF HOUSTON PM	
NAWARAJ PANTA, P.E.	
DWG. NO. SCT-I-14	SHEET NO. 169 OF 361

IDS JOB No. 0057-085-00

PLOTTED: 5/12/2026 9:01 PM

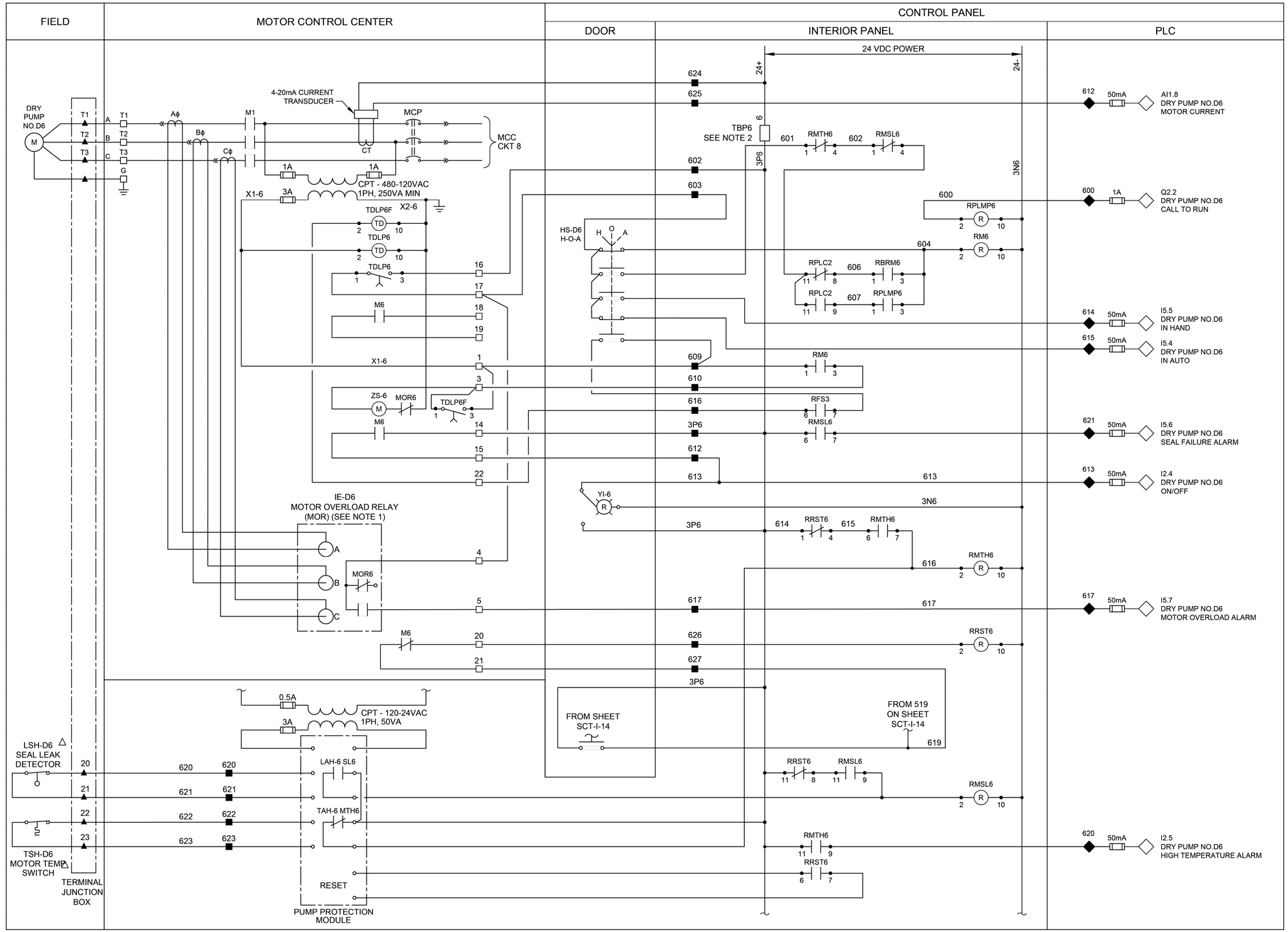

NOTES:

1. MOTOR OVERLOAD RELAY OUTPUT CONTACT SHOWN NORMALLY CLOSED WHEN RELAY IS DE-ENERGIZED, OPEN WHEN ENERGIZED, AND CLOSED WHEN IN ALARM. VERIFY OPERATION OF RELAY PROVIDED AND ADJUST CONNECTION OF RMOR AUXILIARY RELAYS.
2. FUSED TERMINAL ON TERMINAL BLOCK TB4 SEE CONTROL POWER AND COMMUNICATION WIRING DIAGRAM DRAWING NO. SCT-I-3.
3. ALL FLOAT CONTROL CIRCUIT WIRES COLOR SHALL BE YELLOW.

GENERAL NOTES:

1. NO ELECTRICAL MATERIAL, APPARATUS, DEVICES, APPLIANCES, FIXTURES, OR EQUIPMENT SHALL BE SOLD OR INSTALLED IN THE CITY UNLESS THEY ARE IN CONFORMANCE WITH THE PROVISIONS OF SECTION 508 CITY OF HOUSTON ELECTRICAL CODE, THE LAWS OF THE STATE OF TEXAS AND ANY APPLICABLE RULES AND REGULATIONS ISSUED UNDER THE AUTHORITY OF THE STATE STATUES. THE MAKER'S NAME, TRADEMARK, OR OTHER IDENTIFICATION SYMBOL SHALL BE PLACED ON ALL ELECTRICAL MATERIALS, APPARATUS, DEVICES, APPLIANCES, FIXTURES, AND EQUIPMENT USED OR INSTALLED UNDER THE PROVISIONS OF THIS CODE. ALL ELECTRICAL MATERIALS AND EQUIPMENT SHALL BE LISTED AND LABELED FOR THE INTENDED USE AND SHALL BE INCLUDED IN A LIST PUBLISHED BY AN APPROVAL AGENCY.

LEGEND

△ DEVICE OR FIELD TERMINAL LOCATED AT MOTOR
✳ DEVICE OR FIELD TERMINAL LOCATED REMOTE
□ DEVICE OR FIELD TERMINAL LOCATED AT MCC/POWER PANEL
■ FIELD TERMINAL LOCATED AT CONTROL PANEL
▲ REMOTE TERMINAL
● DEVICE TERMINAL NO.
◆ PLC INTERFACE TERMINAL

NO.	DATE	REVISION	APP.

FOR INTERIM REVIEW ONLY NOT INTENDED FOR PERMIT, BIDDING OR CONSTRUCTION PURPOSES.
ENGINEER:
HOSS FOROUZAN
P.E. SERIAL NO.77748
05/18/2026

GAI
Gupta & Associates, Inc.
CONSULTING ENGINEERING
Registration No. F-2593
302 Dennis St.,
Houston, Texas 77006
Tel: 713-636-2936
Fax: 713-636-2987
email: hforouzan@gaiconsulting.com

IDS Engineering Group
13430 NW. Freeway
Suite 700
Houston, Tx. 77040
713.462.3178
TxEng Firm 2726
TxSurv Firm 10110700

CITY OF HOUSTON
HOUSTON PUBLIC WORKS

LIFT STATION RENEWAL AND REPLACEMENT FY 2023

SCOTT NO.3 LIFT STATION PUMP NO. D6 CONTROL WRING DIAGRAM

WBS NUMBER	FOR CITY OF HOUSTON USE ONLY
R-000267-0179-4	
DRAWING SCALE	
HORIZ: NONE VERT: NONE	
CITY OF HOUSTON PM	
NAWARAJ PANTA, P.E.	
SHEET NO. 170 OF 361	

DWG. NO. SCT-I-15

IDS JOB No. 0057-085-00

FILE PATH: O:\H8108_Lift Station Rehabilitation And Reconstruction (IDS)\6 Drawings\Instrumentation And Control\Working\Scott #3\H8108_SCT-I-15.dwg

PLOTTED: 5/12/2026 9:01 PM

HMI

CONTROL PANEL PLC

CONTROL PANEL

FIELD

FIELD

TANK LEAK ALARM MA 001

LEVEL INDICATION LI 101

HIGH ALARM LAH 101

LOW ALARM LAL 101

PUMP NO. 1 RUN YFS 101

PUMP NO. 1 FAIL XA 101

PUMP NO. 1 START/ STOP YCS 101

PUMP NO. 1 SPEED IND. SI 101

PUMP NO. 1 SPEED CNTRL. SC 101

PUMP NO. 2 RUN YFS 102

PUMP NO. 2 FAIL XA 102

PUMP NO. 2 START/ STOP YCS 102

PUMP NO. 2 SPEED IND. SI 102

PUMP NO. 2 SPEED CNTRL. SC 102

FLOW IND. FI 101

FLOW TOTALIZER FRQ 101

FROM SHEET SCT-I-2

FERROUS SULFATE CONTROL PANEL (1)

LT 101

CHEMICAL FEED SYSTEM (1)

CALIBRATION CHAMBER

PRESSURE RELIEF VALVE

PRESSURE GAUGE W/ REGULATOR PI 101

PULSATION DAMPER

BACK PRESSURE VALVE

120V AC

FIT 101

TO CHEMICAL FEED MANHOLE

TRANSIT FLOW METER

M

PERISTALTIC FERROUS SULFATE PMP-CN-101

SIGHT GLASS

LDS

NEW FERROUS SULFATE TANK T-001

LEAK DETECTION SWITCH

DOUBLE WALL CONTAINMENT WITH LEAK DETECTION SWITCH

PRESSURE RELIEF VALVE

M

PERISTALTIC FERROUS SULFATE PMP-CN-102

SIGHT GLASS

DRAIN VALVE

NO.	DATE	REVISION	APP.

NOTES:

(1) TO BE PROVIDED BY CHEMICAL FEED SYSTEM MANUFACTURER.

GENERAL NOTES:

1. NO ELECTRICAL MATERIAL, APPARATUS, DEVICES, APPLIANCES, FIXTURES, OR EQUIPMENT SHALL BE SOLD OR INSTALLED IN THE CITY UNLESS THEY ARE IN CONFORMANCE WITH THE PROVISIONS OF SECTION 508 CITY OF HOUSTON ELECTRICAL CODE, THE LAWS OF THE STATE OF TEXAS AND ANY APPLICABLE RULES AND REGULATIONS ISSUED UNDER THE AUTHORITY OF THE STATE STATUES. THE MAKER'S NAME, TRADEMARK, OR OTHER IDENTIFICATION SYMBOL SHALL BE PLACED ON ALL ELECTRICAL MATERIALS, APPARATUS, DEVICES, APPLIANCES, FIXTURES, AND EQUIPMENT USED OR INSTALLED UNDER THE PROVISIONS OF THIS CODE. ALL ELECTRICAL MATERIALS AND EQUIPMENT SHALL BE LISTED AND LABELED FOR THE INTENDED USE AND SHALL BE INCLUDED IN A LIST PUBLISHED BY AN APPROVAL AGENCY.

FOR INTERIM REVIEW
ONLY NOT INTENDED FOR
PERMIT, BIDDING OR
CONSTRUCTION PURPOSES.
ENGINEER:
HOSS FOROUZAN
P.E. SERIAL NO.77748
05/18/2026

GAI
Gupta & Associates, Inc.
CONSULTING ENGINEERING
Registration No. F-2593
302 Dennis St.,
Houston, Texas 77006
Tel: 713-636-2936
Fax: 713-636-2987
email: hforouzan@gaiconsulting.com

IDS Engineering Group
13430 NW. Freeway
Suite 700
Houston, Tx. 77040
713.462.3178
TxEng Firm 2726
TxSurv Firm 10110700

CITY OF HOUSTON

HOUSTON PUBLIC WORKS

LIFT STATION RENEWAL AND REPLACEMENT FY 2023

SCOTT NO.3 LIFT STATION FERROUS SULFATE FEED PUMPS P&ID DIAGRAM

WBS NUMBER	FOR CITY OF HOUSTON USE ONLY
R-000267-0179-4	
DRAWING SCALE	
HORIZ: NONE VERT: NONE	
CITY OF HOUSTON PM	
NAWARAJ PANTA, P.E.	
SHEET NO. 171 OF 361	

DWG. NO. SCT-I-16

FILE PATH: O:\H8108_Lift Station Rehabilitation And Reconstruction (IDS)\6 Drawings\Instrumentation And Control\Working\Scott #3\H8108_SCT-I-16.dwg

IDS JOB No. 0057-085-00

PLOTTED: 5/12/2026 9:02 PM

FILE PATH: O:\H8108_Lift Station Rehabilitation And Reconstruction (IDS)\6 Drawings\Instrumentation And Control\Working\Scott #3\H8108_SCT-I-17.dwg

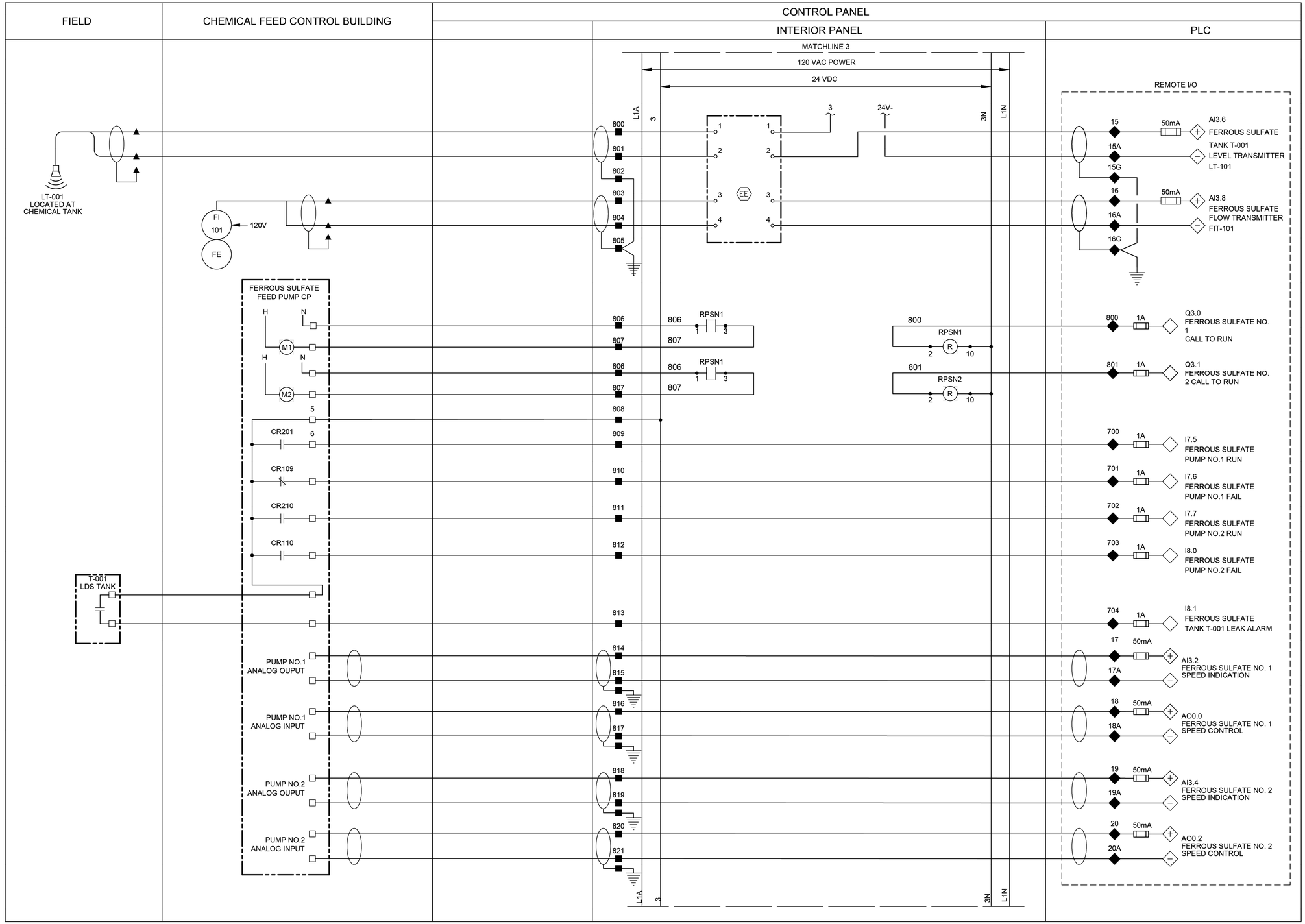

LEGEND

- △ DEVICE OR FIELD TERMINAL LOCATED AT EQUIPMENT
- ✳ DEVICE OR FIELD TERMINAL LOCATED REMOTE
- □ DEVICE OR FIELD TERMINAL LOCATED AT CHEMICAL CONTROL PANEL
- ■ FIELD TERMINAL LOCATED AT CONTROL PANEL
- ▲ REMOTE TERMINAL
- ● DEVICE TERMINAL NO.
- ◆ PLC INTERFACE TERMINAL

NO.	DATE	REVISION	APP.

GENERAL NOTES:

1. NO ELECTRICAL MATERIAL, APPARATUS, DEVICES, APPLIANCES, FIXTURES, OR EQUIPMENT SHALL BE SOLD OR INSTALLED IN THE CITY UNLESS THEY ARE IN CONFORMANCE WITH THE PROVISIONS OF SECTION 508 CITY OF HOUSTON ELECTRICAL CODE, THE LAWS OF THE STATE OF TEXAS AND ANY APPLICABLE RULES AND REGULATIONS ISSUED UNDER THE AUTHORITY OF THE STATE STATUES. THE MAKER'S NAME, TRADEMARK, OR OTHER IDENTIFICATION SYMBOL SHALL BE PLACED ON ALL ELECTRICAL MATERIALS, APPARATUS, DEVICES, APPLIANCES, FIXTURES, AND EQUIPMENT USED OR INSTALLED UNDER THE PROVISIONS OF THIS CODE. ALL ELECTRICAL MATERIALS AND EQUIPMENT SHALL BE LISTED AND LABELED FOR THE INTENDED USE AND SHALL BE INCLUDED IN A LIST PUBLISHED BY AN APPROVAL AGENCY.

FOR INTERIM REVIEW
ONLY NOT INTENDED FOR
PERMIT, BIDDING OR
CONSTRUCTION PURPOSES.
ENGINEER:
HOSS FOROUZAN
P.E. SERIAL NO.77748
05/18/2026

GAI
Gupta & Associates, Inc.
CONSULTING ENGINEERING
Registration No. F-2593
302 Dennis St.,
Houston, Texas 77006
Tel: 713-636-2936
Fax: 713-636-2987
email: hforouzan@gaiconsulting.com

IDS Engineering Group
13430 NW. Freeway
Suite 700
Houston, Tx. 77040
713.462.3178
TxEng Firm 2726
TxSurv Firm 10110700

CITY OF HOUSTON
HOUSTON PUBLIC WORKS

LIFT STATION RENEWAL AND REPLACEMENT FY 2023

SCOTT NO.3 LIFT STATION FERROUS SULFATE FEED PUMPS WIRING DIAGRAM

WBS NUMBER	FOR CITY OF HOUSTON USE ONLY
R-000267-0179-4	
DRAWING SCALE	
HORIZ: NONE VERT: NONE	
CITY OF HOUSTON PM	
NAWARAJ PANTA, P.E.	
SHEET NO. 172 OF 361	

DWG. NO. SCT-I-17

IDS JOB No. 0057-085-00

PLOTTED: 5/12/2026 9:02 PM

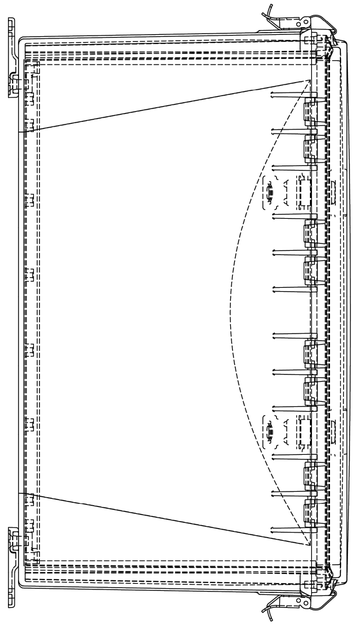

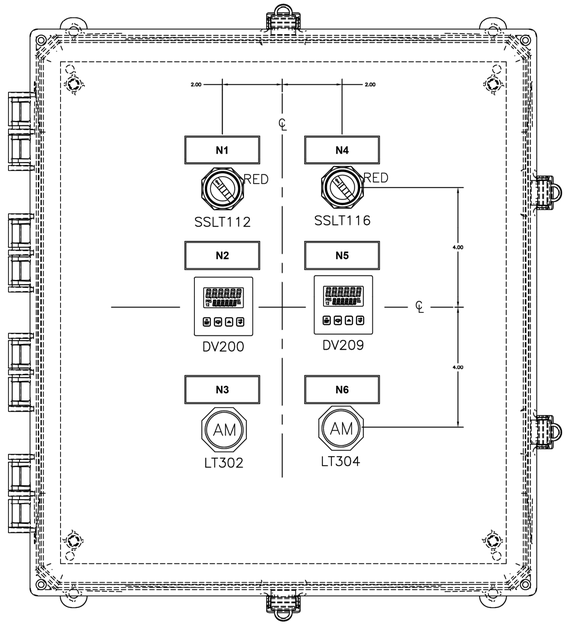

TYPE 4X ENCLOSURE
18x16x10

CHEMICAL FEED PUMP CONTROL PANEL

DETAIL 1
NTS –

CHEMICAL FEED PUMP CONTROL PANEL

DESIGNATION	ENGRAVED
N1	PUMP A HAND-OFF-REMOTE
N2	PUMP A SPEED
N3	PUMP A ALARM
N4	PUMP B HAND-OFF-REMOTE
N5	PUMP B SPEED
N6	PUMP B ALARM

GENERAL NOTES:

1. NO ELECTRICAL MATERIAL, APPARATUS, DEVICES, APPLIANCES, FIXTURES, OR EQUIPMENT SHALL BE SOLD OR INSTALLED IN THE CITY UNLESS THEY ARE IN CONFORMANCE WITH THE PROVISIONS OF SECTION 508 CITY OF HOUSTON ELECTRICAL CODE, THE LAWS OF THE STATE OF TEXAS AND ANY APPLICABLE RULES AND REGULATIONS ISSUED UNDER THE AUTHORITY OF THE STATE STATUES. THE MAKER'S NAME, TRADEMARK, OR OTHER IDENTIFICATION SYMBOL SHALL BE PLACED ON ALL ELECTRICAL MATERIALS, APPARATUS, DEVICES, APPLIANCES, FIXTURES, AND EQUIPMENT USED OR INSTALLED UNDER THE PROVISIONS OF THIS CODE. ALL ELECTRICAL MATERIALS AND EQUIPMENT SHALL BE LISTED AND LABELED FOR THE INTENDED USE AND SHALL BE INCLUDED IN A LIST PUBLISHED BY AN APPROVAL AGENCY.

NO.	DATE	REVISION	APP.

FOR INTERIM REVIEW
ONLY NOT INTENDED FOR
PERMIT, BIDDING OR
CONSTRUCTION PURPOSES.
ENGINEER:
HOSS FOROUZAN
P.E. SERIAL NO.77748
05/18/2026

GAI
Gupta & Associates, Inc.
CONSULTING ENGINEERING
Registration No. F-2593
302 Dennis St.,
Houston, Texas 77006
Tel: 713-636-2936
Fax: 713-636-2987
email: hforouzan@gaiconsulting.com

IDS Engineering Group
13430 NW. Freeway
Suite 700
Houston, Tx. 77040
713.462.3178
TxEng Firm 2726
TxSurv Firm 10110700

CITY OF HOUSTON
HOUSTON PUBLIC WORKS

LIFT STATION RENEWAL
AND REPLACEMENT FY 2023

SCOTT NO.3 LIFT STATION FERROUS SULFATE FEED PUMPS CONTROL PANEL

WBS NUMBER	FOR CITY OF HOUSTON USE ONLY
R-000267-0179-4	
DRAWING SCALE	
HORIZ: NTS VERT: NTS	
CITY OF HOUSTON PM	
NAWARAJ PANTA, P.E.	
SHEET NO. 173 OF 361	

DWG. NO. SCT-I-18

IDS JOB No. 0057-085-00

FILE PATH: O:\H8108_Lift Station Rehabilitation And Reconstruction (IDS)\6 Drawings\Instrumentation And Control\Working\Scott #3\H8108_SCT-I-18.dwg

PLOTTED: 5/13/2026 6:36 PM



N
W E
S

60' 0' 60'
SCALE
1" = 60'

NO.	DATE	REVISION	APP.

BENCHMARK:

CITY OF HOUSTON MONUMENT 5858-7504 IS A BRASS DISC IN CONCRETE STAMPED 150010, LOCATED ON THE NORTHWEST CORNER OF MARKET STREET BRIDGE APPROXIMATELY 0.20 MILE SOUTHWEST FROM THE INTERSECTION OF IH 10 IN KEY MAP 497J IN THE GREENS BAYOU WATERSHED.

ELEV. 30.07 FEET NAVD 1988, 2001 ADJUSTMENT (PROJECT DATUM)
ELEV. 30.17 FEET NAVD 1988, (GEOID 18')

FLOODPLAIN NOTE:

AS PER FIRM PANEL 48201C0720M DATED JANUARY 6, 2017. THIS TRACT LIES WITHIN THE 100-YEAR FLOODPLAIN.
100-YR FLOODPLAIN ELEV. 18.50'
500-YR FLOODPLAIN ELEV. 23.00'
FIRM PANEL: 48201C0720M

EXISTING UTILITY NOTE:

EXISTING UNDERGROUND UTILITY INFORMATION (TYPE, SIZE & OWNERSHIP) ARE SHOWN APPROXIMATELY BASED ON THE AVAILABLE RECORD DRAWINGS AND FIELD VERIFICATION (WHERE FEASIBLE) WITHOUT PROBING AND EXCAVATION. NO WARRANTY IS MADE AS TO THE ACCURACY OR COMPLETENESS OF UTILITY LOCATION SHOWN ON THE DRAWING. CAUTION SHOULD BE EXERCISED WHEN EXCAVATING OR BORE AND JACKING IN THE VICINITY OF UNDERGROUND UTILITIES. OWNERS OF THE UTILITIES SHOULD BE NOTIFIED PRIOR TO SUCH ACTIVITIES. CALL UTILITY COORDINATING COMMITTEE AT 713-223-4567, AT LEAST 48 HOURS PRIOR TO EXCAVATING IN THE STREET RIGHT-OF-WAY.

LEGEND

EXISTING LIFT STATION ACCESS ROUTE. CONTRACTOR RESPONSIBLE FOR COORDINATING ANY ADDITIONAL ACCESS ROUTES FROM THE PUBLIC ROW TO THE EXISTING LIFT STATION SITE.

NOTES:

1. CONTRACTOR MUST MAINTAIN ACCESS TO ALL DRIVEWAYS AND BUSINESSES AT ALL TIMES.
2. CONTRACTOR MUST MAINTAIN ACCESS TO TWO (2) HOME DEPT LOADING BAYS AT ALL TIMES.
3. CONTRACTOR TO UTILIZE AVAILABLE TRAVEL LANES TO ACCESS THE SITE. IF ACCESS IS RESTRICTED, THE CONTRACTOR SHALL COORDINATE WITH THE PROJECT MANAGER.

IDS Engineering Group
13430 NW. Freeway, Suite 700
Houston, Tx. 77040
713.462.3178
TxEng Firm 2726 | TxSurv Firm 10110700

SURVEYED BY: KUO & ASSOCIATES, INC.
TBPE FIRM #F-4578; TBPLS FIRM #1007560

THIS DOCUMENT IS RELEASED FOR THE PURPOSE OF REVIEW UNDER THE AUTHORITY OF MARCEL KHOUW, P.E. 101807 ON 05/27/2026. IT IS NOT TO BE USED FOR CONSTRUCTION PURPOSES.

CITY OF HOUSTON
HOUSTON PUBLIC WORKS

LIFT STATION RENEWAL AND REPLACEMENT FY 2023

MARKET STREET NO. 2 EXISTING SITE ACCESS PLAN

WBS NUMBER	FOR CITY OF HOUSTON USE ONLY
R-000267-0179-4	
DRAWING SCALE	
HORIZ: 1" = 60' VERT: N/A	
CITY OF HOUSTON PM	
NAWARAJ PANTA, P.E.	

DWG. NO.	SHEET NO. 174 OF 361
MKT-C-01	

FILE PATH: \\idseg.com\FS\Projects\0000\005708500 CoH Lift Stations - FY 2023\CAD\DWG\PRODUCTION\174-MARKET ST SITE ACCESS.dwg

PLOTTED: 5/13/2026 6:36 PM

FILE PATH: \\idseg.com\FS\Projects\0000\005708500 CoH Lift Stations - FY 2023\CAD\DWG\PRODUCTION\175-MARKET ST OVERALL SITE PLAN.dwg

LEGEND

- EXISTING CONCRETE PAVEMENT
- EXISTING CONCRETE SIDEWALK
- LIDAR CONTOUR DATED 2018

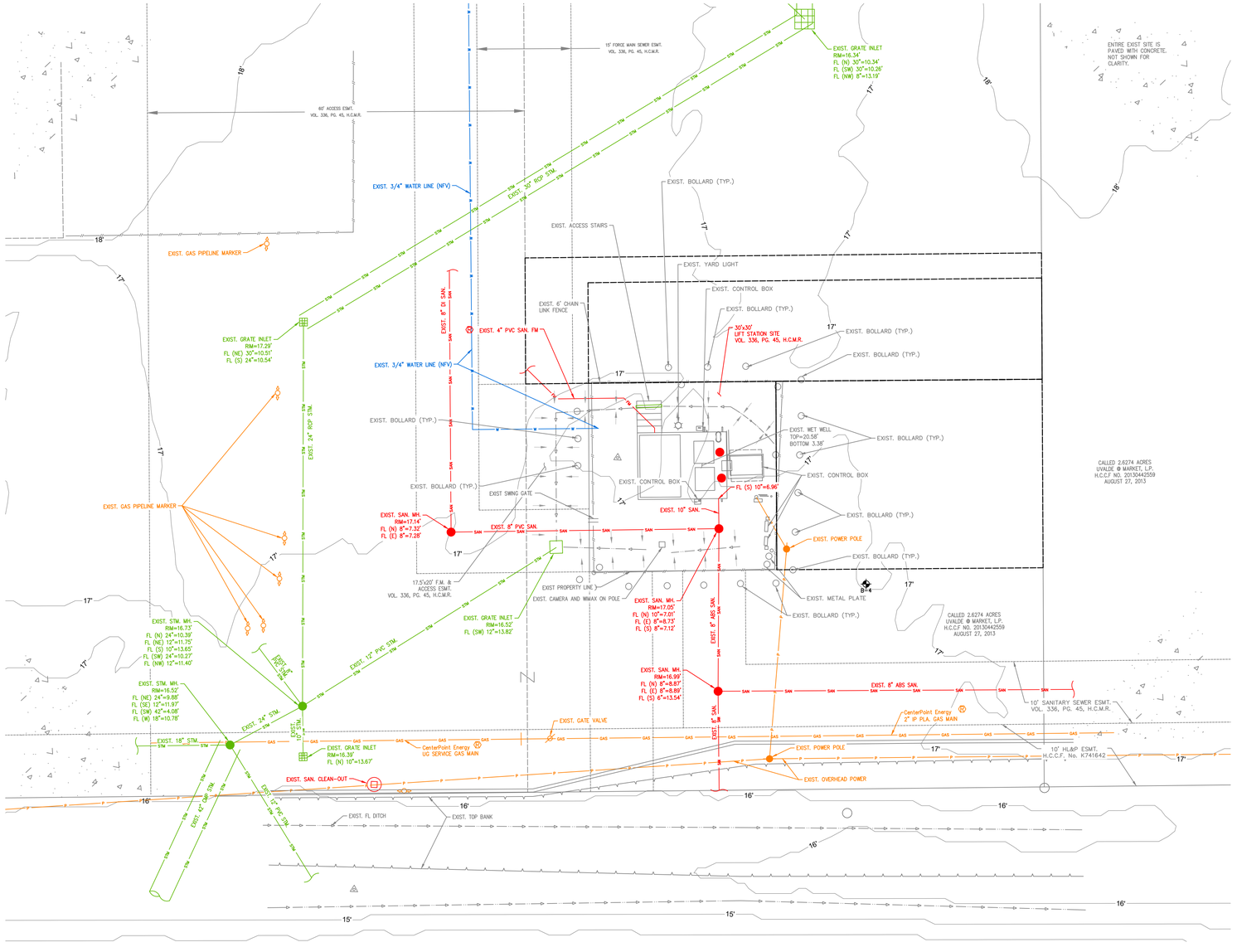

10' 0' 10'
SCALE
1" = 10'

N
W E
S

NO.	DATE	REVISION	APP.

BENCHMARK:

CITY OF HOUSTON MONUMENT 5858-7504 IS A BRASS DISC IN CONCRETE STAMPED 150010, LOCATED ON THE NORTHWEST CORNER OF MARKET STREET BRIDGE APPROXIMATELY 0.20 MILE SOUTHWEST FROM THE INTERSECTION OF IH 10 IN KEY MAP 497J IN THE GREENS BAYOU WATERSHED.

ELEV. 30.07 FEET NAVD 1988, 2001 ADJUSTMENT (PROJECT DATUM)
ELEV. 30.17 FEET NAVD 1988, (GEOID 18')

FLOODPLAIN NOTE:

FLOODPLAIN REFERENCE MARK NUMBER 150010 IS A BRASS DISC IN CONCRETE LOCATED ON THE WEST SIDE OF BRIDGE ALONG MARKET ST. AT GREENS BAYOU.

ELEV. 30.07 FEET NAVD 1988, 2001 ADJUSTMENT
AS PER FIRM PANEL 48201C0720M DATED JANUARY 6, 2017. THIS TRACT LIES WITHIN THE 100-YEAR FLOODPLAIN.
100-YR FLOODPLAIN ELEV. 18.50'
500-YR FLOODPLAIN ELEV. 23.00'
FIRM PANEL: 48201C0720M

EXISTING UTILITY NOTE:

EXISTING UNDERGROUND UTILITY INFORMATION (TYPE, SIZE & OWNERSHIP) ARE SHOWN APPROXIMATELY BASED ON THE AVAILABLE RECORD DRAWINGS AND FIELD VERIFICATION (WHERE FEASIBLE) WITHOUT PROBING AND EXCAVATION. NO WARRANTY IS MADE AS TO THE ACCURACY OR COMPLETENESS OF UTILITY LOCATION SHOWN ON THE DRAWING. CAUTION SHOULD BE EXERCISED WHEN EXCAVATING OR BORE AND JACKING IN THE VICINITY OF UNDERGROUND UTILITIES. OWNERS OF THE UTILITIES SHOULD BE NOTIFIED PRIOR TO SUCH ACTIVITIES. CALL UTILITY COORDINATING COMMITTEE AT 713-223-4567, AT LEAST 48 HOURS PRIOR TO EXCAVATING IN THE STREET RIGHT-OF-WAY.

NOTICE:
FOR YOUR SAFETY, YOU ARE REQUIRED BY TEXAS LAW TO CALL 811 AT LEAST 48 HOURS BEFORE YOU DIG SO THAT UNDERGROUND LINES CAN BE MARKED. THIS SIGNATURE DOES NOT FULFILL YOUR OBLIGATION TO CALL 811

VERIFICATION OF PRIVATE UTILITY LINES

Date

CenterPoint Energy natural gas utilities shown. (Gas service lines are not shown). This signature not be used for conflict verification.

Signature valid for six months.

Date

CenterPoint Energy/UNDERGROUND Electrical Facilities Verification ONLY. (This signature verifies existing underground facilities – not to be used for conflict verification)

Signature valid for six months.

Date

Approved for AT&T underground conduit facilities only.
Signature valid for one year.

IDS Engineering Group
13430 NW. Freeway, Suite 700
Houston, Tx. 77040
713.462.3178
TxEng Firm 2726 | TxSurv Firm 10110700

THIS DOCUMENT IS RELEASED FOR THE PURPOSE OF REVIEW UNDER THE AUTHORITY OF MARCEL KHOUW, P.E. 101807 ON 05/27/2026. IT IS NOT TO BE USED FOR CONSTRUCTION PURPOSES.

SURVEYED BY: KUO & ASSOCIATES, INC.
TBPE FIRM #F-4578; TBPLS FIRM #1007560

CITY OF HOUSTON
HOUSTON PUBLIC WORKS

LIFT STATION RENEWAL AND REPLACEMENT FY 2023

MARKET ST. NO. 2 LIFT STATION EXISTING SITE PLAN

WBS NUMBER	FOR CITY OF HOUSTON USE ONLY
R-000267-0179-4	
DRAWING SCALE	
HORIZ: 1" = 10' VERT: N/A	
CITY OF HOUSTON PM	
NAWARAJ PANTA, P.E.	
SHEET NO. 175 OF 361	

DWG. NO.
SCT-C-01

PLOTTED: 5/13/2026 6:36 PM

FILE PATH: \\dseg.com\FS\Projects\0000\005708500 CoH Lift Stations - FY 2023\CAD\DWG\PRODUCTION\176-MARKET ST SITE PLAN AND DEMO.dwg

LEGEND

- EXISTING CONCRETE PAVEMENT
- REMOVE EXISTING CONCRETE PAVEMENT
- SITE DEMOLITION
- EXISTING CONCRETE SIDEWALK
- REMOVE EXISTING CONCRETE SIDEWALK
- LIFT STATION DEMOLITION
- ABANDON ANY UNDERGROUND UTILITY
- REMOVE ANY UNDERGROUND UTILITY
- REMOVE EXISTING FENCE
- FILTER FABRIC FENCE
- CTW — CONCRETE TRUCK WASHOUT
  * CONTRACTOR TOO PLACE CTW AS NECESSARY WITHIN COH PROPERTY OR EASEMENTS AS APPROVED BY PROJECT MANAGER

NOTES:

1. EXISTING LIFT STATION WET WELL TO REMAIN.
2. SEE ELECTRICAL PLANS ON DWG. NO.'S MKT-E-01 THROUGH MKT-I-13 FOR ELECTRICAL IMPROVEMENTS.
3. CONTRACTOR SHALL COORDINATE WITH CENTERPOINT ENERGY TO DE-ENERGIZE THE LIFT STATION AND OTHER ELECTRICAL EQUIPMENT ON SITE.
4. CONTRACTOR SHALL PROTECT THE EXISTING CONDUIT AND CABLE. IF CABLE OR CONDUIT IS DAMAGED CONTRACTOR SHALL REPLACE AT NO ADDITIONAL COST TO THE CITY.
5. REMOVE THE EXISTING FORCE MAIN TO THE NEAREST PIPE JOINT AND TIE PROPOSED FORCE MAIN TO EXISTING USING RESTRAINED JOINTS.
6. THE EXISTING FORCE MAIN IS ASSUMED TO BE DUCTILE IRON BELL AND SPIGOT AND SHALL BE FIELD VERIFIED BY THE CONTRACTOR.
7. THE CITY OF HOUSTON WILL RETAIN SALVAGE RIGHTS TO ALL MATERIAL AND EQUIPMENT. ALL MATERIALS AND EQUIPMENT RETAINED BY THE CITY OF HOUSTON SHALL BE DELIVERED TO A POINT DESIGNATED BY CITY OF HOUSTON REPRESENTATIVE (MR. ARTURO CARRILLO 832-395-3558). ANY MATERIAL OR EQUIPMENT NOT RETAINED BY THE CITY OF HOUSTON SHALL BE REMOVED FROM THE SITE AND DISPOSED OF BY THE CONTRACTOR IN ACCORDANCE WITH APPLICABLE REGULATIONS.
8. CONTRACTOR TO SAW-CUT, REMOVE, AND REPLACE CONCRETE AS NECESSARY. NO SEPARATE PAY.
9. FOR REQUIRED STORMWATER POLLUTION PREVENTION PLAN MEASURE ON PROPOSED INLETS SEE DRAINAGE PLAN.

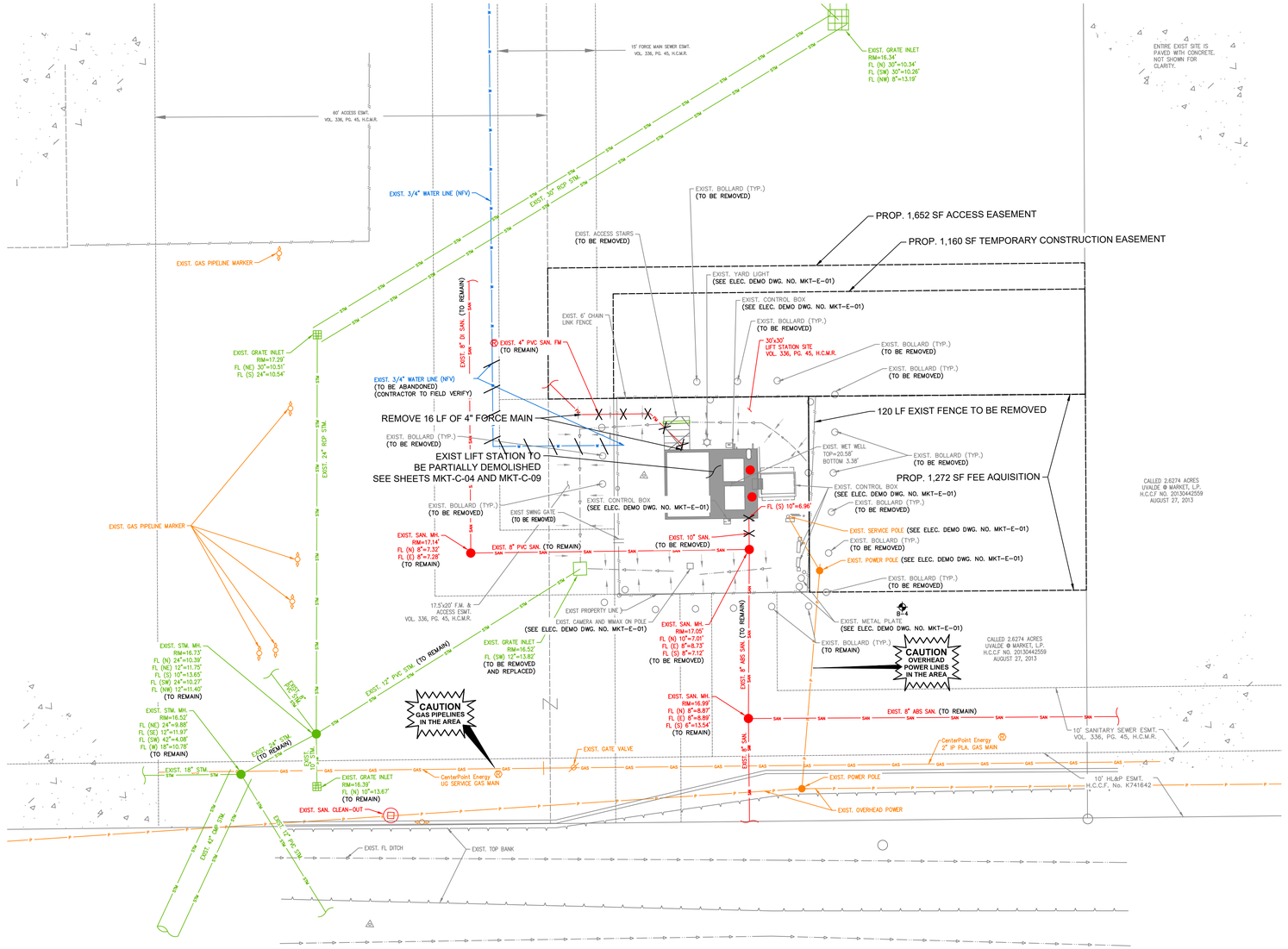

N

10' 0' 10'
SCALE
1" = 10'

NO.	DATE	REVISION	APP.

BENCHMARK:

CITY OF HOUSTON MONUMENT 5858-7504 IS A BRASS DISC IN CONCRETE STAMPED 150010, LOCATED ON THE NORTHWEST CORNER OF MARKET STREET BRIDGE APPROXIMATELY 0.20 MILE SOUTHWEST FROM THE INTERSECTION OF IH 10 IN KEY MAP 497J IN THE GREENS BAYOU WATERSHED.

ELEV. 30.07 FEET NAVD 1988, 2001 ADJUSTMENT (PROJECT DATUM)
ELEV. 30.17 FEET NAVD 1988, (GEOID 18')

FLOODPLAIN NOTE:

FLOODPLAIN REFERENCE MARK NUMBER 150010 IS A BRASS DISC IN CONCRETE LOCATED ON THE WEST SIDE OF BRIDGE ALONG MARKET ST. AT GREENS BAYOU.

ELEV. 30.07 FEET NAVD 1988, 2001 ADJUSTMENT
AS PER FIRM PANEL 48201C0720M DATED JANUARY 6, 2017. THIS TRACT LIES WITHIN THE 100-YEAR FLOODPLAIN.
100-YR FLOODPLAIN ELEV. 18.50'
500-YR FLOODPLAIN ELEV. 23.00'
FIRM PANEL: 48201C0720M

EXISTING UTILITY NOTE:

EXISTING UNDERGROUND UTILITY INFORMATION (TYPE, SIZE & OWNERSHIP) ARE SHOWN APPROXIMATELY BASED ON THE AVAILABLE RECORD DRAWINGS AND FIELD VERIFICATION (WHERE FEASIBLE) WITHOUT PROBING AND EXCAVATION. NO WARRANTY IS MADE AS TO THE ACCURACY OR COMPLETENESS OF UTILITY LOCATION SHOWN ON THE DRAWING. CAUTION SHOULD BE EXERCISED WHEN EXCAVATING OR BORE AND JACKING IN THE VICINITY OF UNDERGROUND UTILITIES. OWNERS OF THE UTILITIES SHOULD BE NOTIFIED PRIOR TO SUCH ACTIVITIES. CALL UTILITY COORDINATING COMMITTEE AT 713-223-4567, AT LEAST 48 HOURS PRIOR TO EXCAVATING IN THE STREET RIGHT-OF-WAY.

NOTICE:
FOR YOUR SAFETY, YOU ARE REQUIRED BY TEXAS LAW TO CALL 811 AT LEAST 48 HOURS BEFORE YOU DIG SO THAT UNDERGROUND LINES CAN BE MARKED. THIS SIGNATURE DOES NOT FULFILL YOUR OBLIGATION TO CALL 811

VERIFICATION OF PRIVATE UTILITY LINES

Date

CenterPoint Energy natural gas utilities shown. (Gas service lines are not shown). This signature not be used for conflict verification.

Signature valid for six months.

Date

CenterPoint Energy/UNDERGROUND Electrical Facilities Verification ONLY. (This signature verifies existing underground facilities – not to be used for conflict verification)

Signature valid for six months.

Date

Approved for AT&T underground conduit facilities only.
Signature valid for one year.

IDS Engineering Group
13430 NW. Freeway, Suite 700
Houston, Tx. 77040
713.462.3178
TxEng Firm 2726 | TxSurv Firm 10110700

SURVEYED BY: KUO & ASSOCIATES, INC.
TBPE FIRM #F-4578; TBPLS FIRM #1007560

THIS DOCUMENT IS RELEASED FOR THE PURPOSE OF REVIEW UNDER THE AUTHORITY OF MARCEL KHOUW, P.E. 101807 ON 05/27/2026. IT IS NOT TO BE USED FOR CONSTRUCTION PURPOSES.

CITY OF HOUSTON
HOUSTON PUBLIC WORKS

LIFT STATION RENEWAL AND REPLACEMENT FY 2023

MARKET STREET NO. 2 LIFT STATION SITE DEMOLITION PLAN AND SWPPP

WBS NUMBER	FOR CITY OF HOUSTON USE ONLY
R-000267-0179-4	
DRAWING SCALE	
HORIZ: 1" = 10' VERT: N/A	
CITY OF HOUSTON PM	
NAWARAJ PANTA, P.E.	

DWG. NO.	SHEET NO. 176 OF 361
MKT-C-03	

PLOTTED: 5/14/2026 3:34 PM

LIFT STATION DEMOLITION AND ABANDONMENT NOTES:

1. THIS DRAWING IS A REPRODUCTION OF THE EXISTING LIFT STATIO CONSTRUCTION DRAWINGS AND INTENDED TO PROVIDE GENERAL INFORMATION FOR STATION DEMOLITION. THE CONTRACTOR IS RESPONSIBLE FOR DETERMINING THE ACTUAL WORK REQUIRED FOR DEMOLITION AND REMOVAL OF STRUCTURAL, MECHANICAL, AND ELECTRICAL COMPONENTS. A CLAIM FOR CHANGED CONDITIONS BETWEEN THE EXISTING CONDITIONS AND THE RECORD DRAWING WILL NOT BE CONSIDERED.
2. NO DEMOLITION IS TO BE PERFORMED UNTIL BYPASS PUMPING HAS BEEN INSTALLED AND OPERATIONAL.
3. THE CITY OF HOUSTON WILL RETAIN SALVAGE RIGHTS TO ALL MATERIAL AND EQUIPMENT. ALL MATERIALS AND EQUIPMENT RETAINED BY THE CITY OF HOUSTON SHALL BE DELIVERED TO A POINT DESIGNATED BY CITY OF HOUSTON REPRESENTATIVE (MR. ARTURO CARRILLO 832-395-3558). ANY MATERIAL OR EQUIPMENT NOT RETAINED BY THE CITY OF HOUSTON SHALL BE REMOVED FROM THE SITE AND DISPOSED OF BY THE CONTRACTOR IN ACCORDANCE WITH APPLICABLE REGULATIONS.
4. WHEN REMOVING EXISTING PUMPS, CONTRACTOR SHALL LEAVE AS MUCH WIRE/CABLE AS POSSIBLE IN ORDER FOR THE CITY TO REUSE THE PUMPS.
5. CONTRACTOR SHALL NOTIFY TEXAS DEPARTMENT OF HEALTH (DEPARTMENT) ON A FORM SPECIFIED BY THE DEPARTMENT OF ANY ASBESTOS ABATEMENT ACTIVITY, RENOVATION OR OPERATIONS AND MAINTENANCE ACTIVITY AFFECTING ASBESTOS-CONTAINING BUILDING MATERIALS, OR ANY DEMOLITION IN FACILITIES OR PUBLIC BUILDINGS.
6. CONCRETE SLAB AND WALLS INDICATED ON THIS PLAN SHALL BE REMOVED TO 5 FEET BELOW FINISHED GRADE AS PER SPECIFICATION SECTION 02220.
7. ALL REMAINING WALL OPENINGS IN THE VALVE VAULT SHALL BE SEALED WITH NON-SHRINK GROUT.
8. CONTRACTOR SHALL BACKFILL THE ABANDONED AND DEMOLISHED VALVE VAULT. BACKFILL SHALL BE SUITABLE FILL AND FLOWABLE FILL AS SHOWN AND COMPACTED PROPERLY UP TO THE PROPOSED CONCRETE DISCHARGE ASSEMBLY PAD.
9. THE CONTRACTOR SHALL COORDINATE WITH CENTERPOINT ENERGY TO TEMPORARILY DISCONNECT ELECTRICAL POWER AS NEEDED.
10. THE EXISTING WET WELL SHALL BE CLEANED OF ALL DEBRIS, WASTEWATER AND OTHER RESIDUES BY AN APPROVED CITY OF HOUSTON DISPOSAL CONTRACTOR.
11. THE CONTRACTOR SHALL DISPOSE OF ANY LIQUID OR SOLID WASTE FOUND IN THE WET WELL AT A DISPOSAL FACILITY LICENSED AND APPROVED BY THE STATE OF TEXAS. THE CONTRACTOR SHALL BE RESPONSIBLE FOR THE COST OF TRANSPORTATION, DISPOSAL AND TESTING REQUIRED BY STATE AND FEDERAL REGULATORY AGENCIES, AND BY THE DISPOSAL FACILITY.
12. PRIOR TO THE CLEAN-OUT AND CLEANING OF THE EXISTING LIFT STATION WET WELL, CONTRACTOR TO SUBMIT PROOF TO C.O.H. CONSTRUCTION PM THAT TRANSPORTER/HAULER TO BE USED FOR THE TRANSPORT OF THE CONTENTS OF THE WET WELL (I.E., SOLIDS, GRIT, SEWAGE SLUDGE, AND DOMESTIC SLUDGE, ETC.) IS REGISTERED BY THE TEXAS COMMISSION ON ENVIRONMENTAL QUALITY (TCEQ) AS A SLUDGE TRANSPORTER AND THE TRANSPORTER'S REGISTRATION IS CURRENT AND VALID DURING THE PERIOD OF PERFORMANCE.
13. CONTRACTOR SHALL SUBMIT PROOF OF SUBMISSION OF REQUIRED ASBESTOS/DEMOLITION NOTIFICATION FORM TO THE TEXAS DEPARTMENT OF STATE HEALTH SERVICES TO C.O.H. CONSTRUCTION PM. THE NOTIFICATION TO THE STATE MUST BE PROVIDED A MINIMUM OF 10 DAYS PRIOR TO THE STARTUP OF ANY DEMOLITION ACTIVITIES AT THE SITE.
14. CONTRACTOR SHALL OBTAIN CITY OF HOUSTON DEMOLITION PERMIT (SEE FORM CE 1075 REV. 01/01/2015 FOR GUIDELINES) OR SUBMIT PROOF OF NON-APPLICABILITY TO C.O.H. CONSTRUCTION PROJECT MANAGER PRIOR TO THE STARTUP OF DEMOLITION ACTIVITIES AT THE SITE. THE CONTRACTOR SHALL OBTAIN ANY STATE DEMOLITION PERMITS REQUIRED.

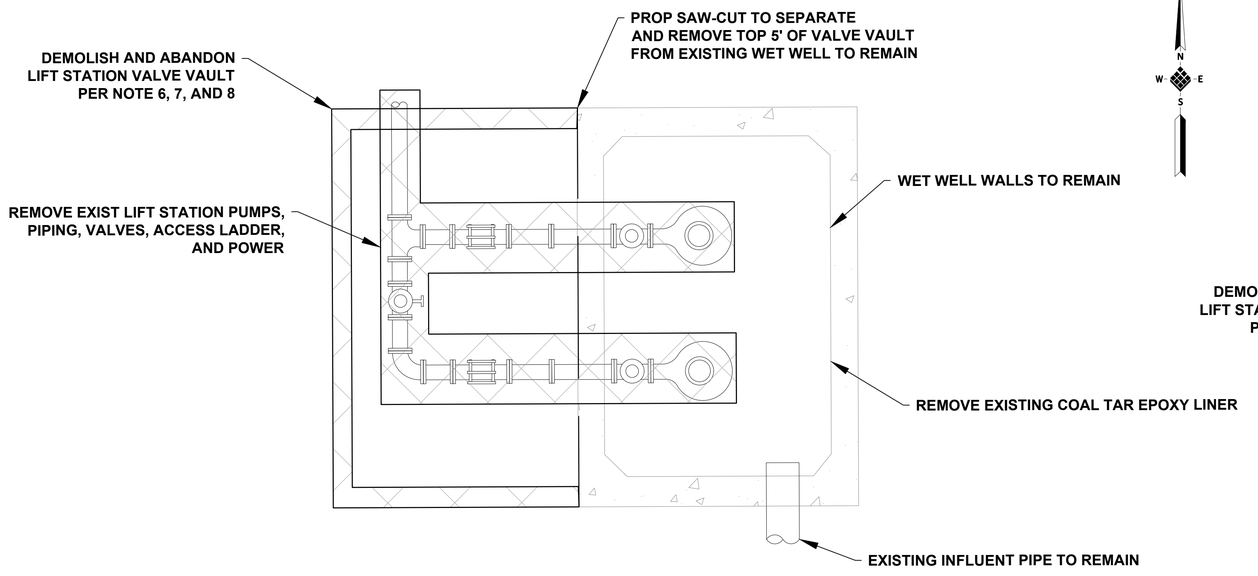

LIFT STATION PLAN

SCALE: 1" = 2'

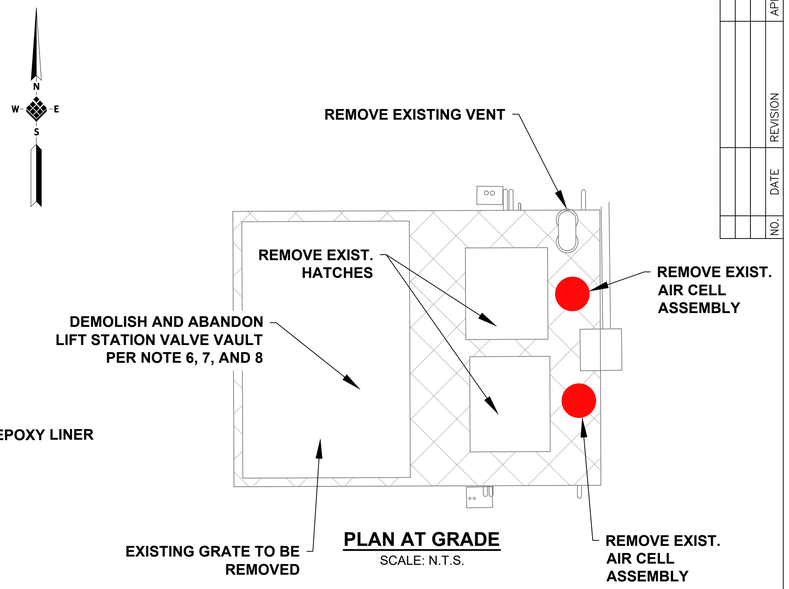

PLAN AT GRADE

SCALE: N.T.S.

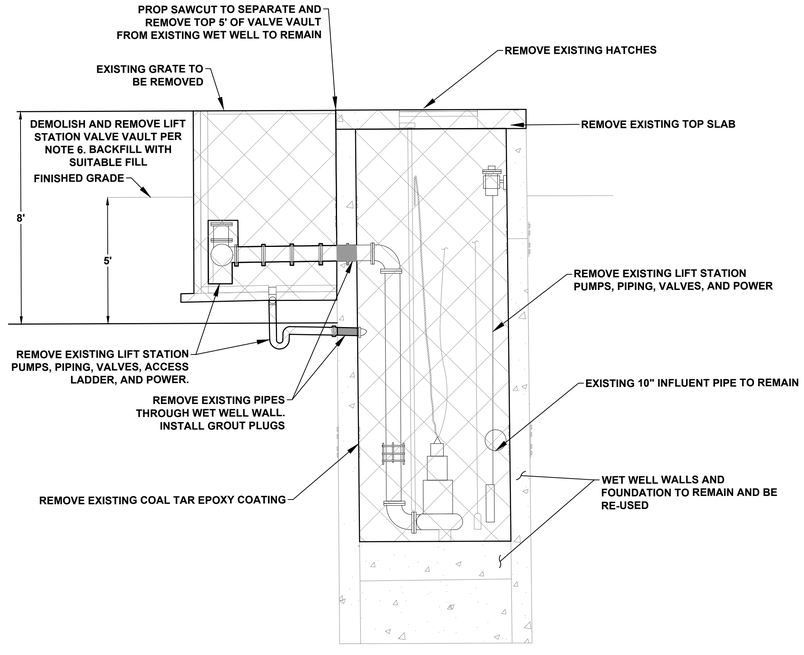

LIFT STATION SECTION

SCALE: 1" = 3'

LEGEND

DEMOLITION AREA

ABANDON VALVE VAULT

NO.	DATE	REVISION	APP.

IDS Engineering Group
13430 NW. Freeway, Suite 700
Houston, Tx. 77040
713.462.3178
TxEng Firm 2726 | TxSurv Firm 10110700

SURVEYED BY: KUO & ASSOCIATES, INC.
TBPE FIRM #F-4578; TBPLS FIRM #1007560

THIS DOCUMENT IS RELEASED FOR THE PURPOSE OF REVIEW UNDER THE AUTHORITY OF MARCEL KHOUW, P.E. 101807 ON 05/27/2026. IT IS NOT TO BE USED FOR CONSTRUCTION PURPOSES.

CITY OF HOUSTON
HOUSTON PUBLIC WORKS

LIFT STATION RENEWAL AND REPLACEMENT FY 2023

MARKET STREET NO. 2 LIFT STATION SECTION DEMOLITION

WBS NUMBER	FOR CITY OF HOUSTON USE ONLY
R-000267-0179-4	
DRAWING SCALE	
HORIZ: AS NOTED VERT: N/A	
CITY OF HOUSTON PM	
NAWARAJ PANTA, P.E.	

DWG. NO.	SHEET NO.
MKT-C-04	177 OF 361

FILE PATH: \\idseg.com\FS\Projects\0000\005708500 CoH Lift Stations - FY 2023\CAD\DWG\PRODUCTION\177-MARKET ST SECTION DEMO.dwg

PLOTTED: 5/13/2026 6:37 PM

FILE PATH: \\idseg.com\FS\Projects\0000\005708500 CoH Lift Stations - FY 2023\CAD\DWG\PRODUCTION\178-MARKET ST PROP SITE PLAN.dwg

NOTES:

1. EXISTING LIFT STATION WET WELL TO REMAIN.
2. SEE ELECTRICAL PLANS ON DWG. NO.'S MKT-E-01 THROUGH MKT-I-13 FOR ELECTRICAL IMPROVEMENTS.
3. CONTRACTOR SHALL COORDINATE WITH CENTERPOINT ENERGY TO DE-ENERGIZE THE LIFT STATION AND OTHER ELECTRICAL EQUIPMENT ON SITE.
4. NOT USED
5. DOWEL INTO EXISTING PAVEMENT. USE 24" x #4 SMOOTH DOWELS AT 18" CENTER TO CENTER, CENTERED ON SAW-CUT.
6. SANITARY SEWER MANHOLES INSTALLED BELOW THE FLOODPLAIN ELEVATION SHALL HAVE WATERTIGHT MANHOLE FRAMES AND COVERS AS PER SPECIFICATION 02090.
7. CONTRACTOR SHALL FIELD VERIFY THE LOCATION OF THE HOLES DRILLED FOR THE RISER PIPE INSTALLATION THRU THE WET VAULT TOP SLAB.
8. REMOVE THE EXISTING FORCE MAIN TO THE NEAREST PIPE JOINT AND TIE PROPOSED FORCE MAIN TO EXISTING USING RESTRAINED JOINTS.
9. THE EXISTING FORCE MAIN IS ASSUMED TO BE DUCTILE IRON BELL AND SPIGOT AND SHALL BE FIELD VERIFIED BY THE CONTRACTOR.
10. CONTRACTOR TO PROTECT EXISTING CONDUIT AND CABLE. IF CABLE OR CONDUIT IS DAMAGED DURING CONSTRUCTION, CONTRACTOR SHALL REPLACE AT NO ADDITIONAL COST TO THE CITY.
11. YARD LIGHT POLES, ELECTRICAL & COMMUNICATION POLES, AND SERVICE POLES SHALL BE ABLE TO WITHSTAND ULTIMATE DESIGN WIND SPEED OF 130 MPH, V(ULT).
12. COAT MANHOLE IN ACCORDANCE WITH SYSTEM 108 PER SPEC SECTION 09901 PART 2.03J.
13. ACCESS TO THE HOME DEPOT SHIPPING BAY LOCATED WEST OF THE SITE SHALL BE MAINTAINED THROUGHOUT CONSTRUCTION.
14. CONTRACTOR TO SAW-CUT, REMOVE, AND REPLACE CONCRETE AS NECESSARY. NO SEPARATE PAY.
15. SAW-CUT AND REMOVE CONCRETE PAVEMENT AND INSTALL FOUNDATION AS SHOWN ON STRUCTURAL DWG. NO. MKT-S-06.

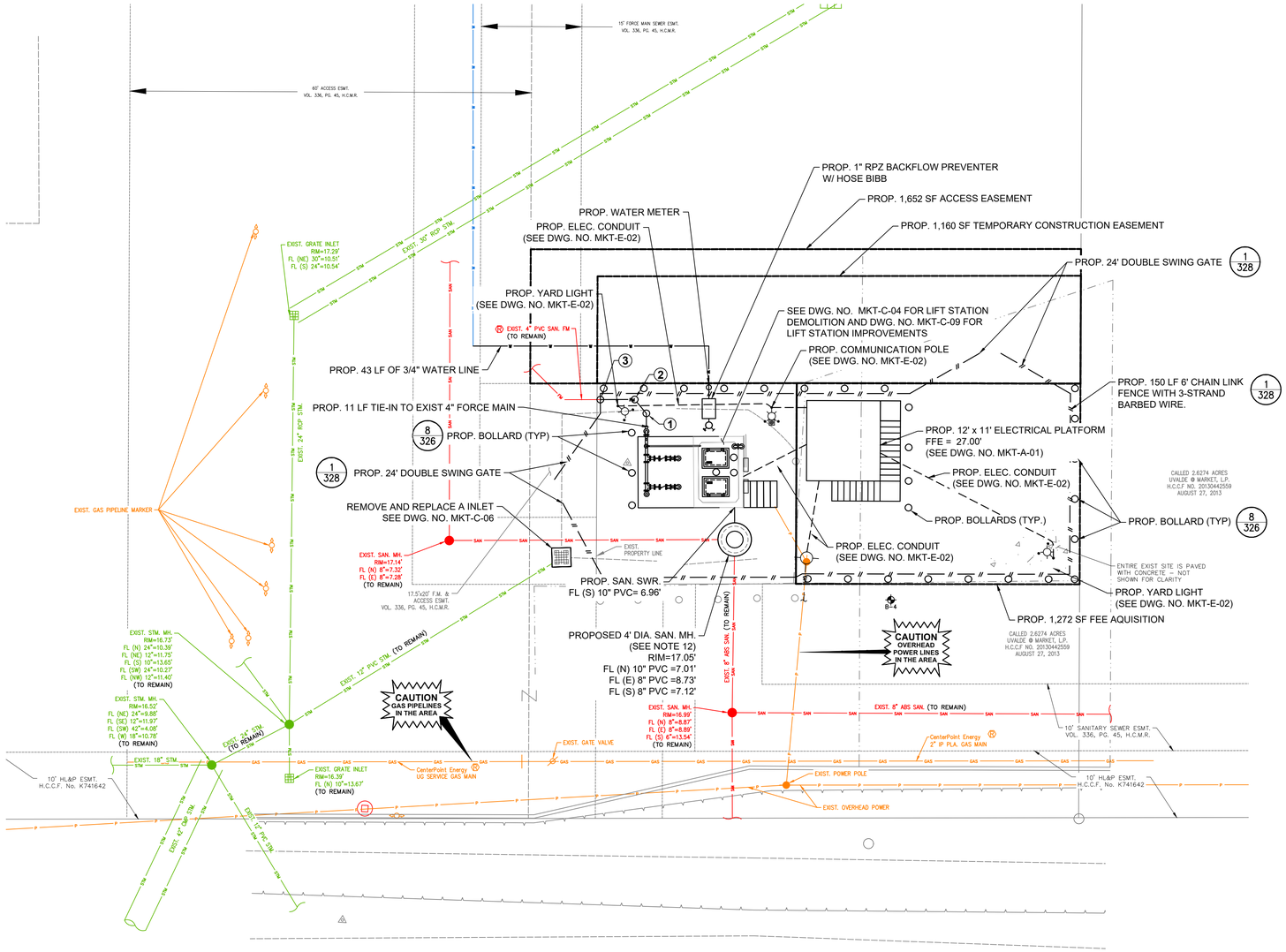

PROPOSED POINT TABLE				
POINT	NORTHING	EASTING	DESCRIPTION	ELEVATION
1	13848235.72	3179026.53	PROP. 45° FORCE MAIN BEND	11.99'
2	13848237.69	3179024.67	PROP. 45° FORCE MAIN BEND	11.99'
3	13848237.37	3179019.55	PROP. TIE-IN (NFV)	11.99'

LEGEND

EXISTING CONCRETE PAVEMENT

SAW-CUT CONCRETE

DETAIL NO.
SHEET NO.

10' 0' 10'
SCALE
1"=10'

N W E S

NO.	DATE	REVISION	APP.

BENCHMARK:

CITY OF HOUSTON MONUMENT 5858-7504 IS A BRASS DISC IN CONCRETE STAMPED 150010, LOCATED ON THE NORTHWEST CORNER OF MARKET STREET BRIDGE APPROXIMATELY 0.20 MILE SOUTHWEST FROM THE INTERSECTION OF IH 10 IN KEY MAP 497J IN THE GREENS BAYOU WATERSHED.

ELEV. 30.07 FEET NAVD 1988, 2001 ADJUSTMENT (PROJECT DATUM)
ELEV. 30.17 FEET NAVD 1988, (GEOID 18')

FLOODPLAIN NOTE:

FLOODPLAIN REFERENCE MARK NUMBER 150010 IS A BRASS DISC IN CONCRETE LOCATED ON THE WEST SIDE OF BRIDGE ALONG MARKET ST. AT GREENS BAYOU.

ELEV. 30.07 FEET NAVD 1988, 2001 ADJUSTMENT
AS PER FIRM PANEL 48201C0720M DATED JANUARY 6, 2017. THIS TRACT LIES WITHIN THE 100-YEAR FLOODPLAIN.
100-YR FLOODPLAIN ELEV. 18.50'
500-YR FLOODPLAIN ELEV. 23.00'
FIRM PANEL: 48201C0720M

EXISTING UTILITY NOTE:

EXISTING UNDERGROUND UTILITY INFORMATION (TYPE, SIZE & OWNERSHIP) ARE SHOWN APPROXIMATELY BASED ON THE AVAILABLE RECORD DRAWINGS AND FIELD VERIFICATION (WHERE FEASIBLE) WITHOUT PROBING AND EXCAVATION. NO WARRANTY IS MADE AS TO THE ACCURACY OR COMPLETENESS OF UTILITY LOCATION SHOWN ON THE DRAWING. CAUTION SHOULD BE EXERCISED WHEN EXCAVATING OR BORE AND JACKING IN THE VICINITY OF UNDERGROUND UTILITIES. OWNERS OF THE UTILITIES SHOULD BE NOTIFIED PRIOR TO SUCH ACTIVITIES. CALL UTILITY COORDINATING COMMITTEE AT 713-223-4567, AT LEAST 48 HOURS PRIOR TO EXCAVATING IN THE STREET RIGHT-OF-WAY.

NOTICE:

FOR YOUR SAFETY, YOU ARE REQUIRED BY TEXAS LAW TO CALL 811 AT LEAST 48 HOURS BEFORE YOU DIG SO THAT UNDERGROUND LINES CAN BE MARKED. THIS SIGNATURE DOES NOT FULFILL YOUR OBLIGATION TO CALL 811

VERIFICATION OF PRIVATE UTILITY LINES

Date

CenterPoint Energy natural gas utilities shown. (Gas service lines are not shown). This signature not be used for conflict verification.

Signature valid for six months.

Date

CenterPoint Energy/UNDERGROUND Electrical Facilities Verification ONLY. (This signature verifies existing underground facilities – not to be used for conflict verification)

Signature valid for six months.

Date

Approved for AT&T underground conduit facilities only. Signature valid for one year.

IDS Engineering Group
13430 NW. Freeway, Suite 700
Houston, Tx. 77040
713.462.3178
TxEng Firm 2726 | TxSurv Firm 10110700

SURVEYED BY: KUO & ASSOCIATES, INC.
TBPE FIRM #F-4578; TBPLS FIRM #1007560

THIS DOCUMENT IS RELEASED FOR THE PURPOSE OF REVIEW UNDER THE AUTHORITY OF MARCEL KHOUW, P.E. 101807 ON 05/27/2026. IT IS NOT TO BE USED FOR CONSTRUCTION PURPOSES.

CITY OF HOUSTON
HOUSTON PUBLIC WORKS

LIFT STATION RENEWAL AND REPLACEMENT FY 2023

MARKET STREET NO. 2 LIFT STATION PROPOSED SITE PLAN

WBS NUMBER	FOR CITY OF HOUSTON USE ONLY
R-000267-0179-4	
DRAWING SCALE	
HORIZ: 1" = 10' VERT: N/A	
CITY OF HOUSTON PM	
NAWARAJ PANTA, P.E.	
SHEET NO. 178 OF 361	

DWG. NO.
MKT-C-05

PLOTTED: 5/13/2026 6:37 PM

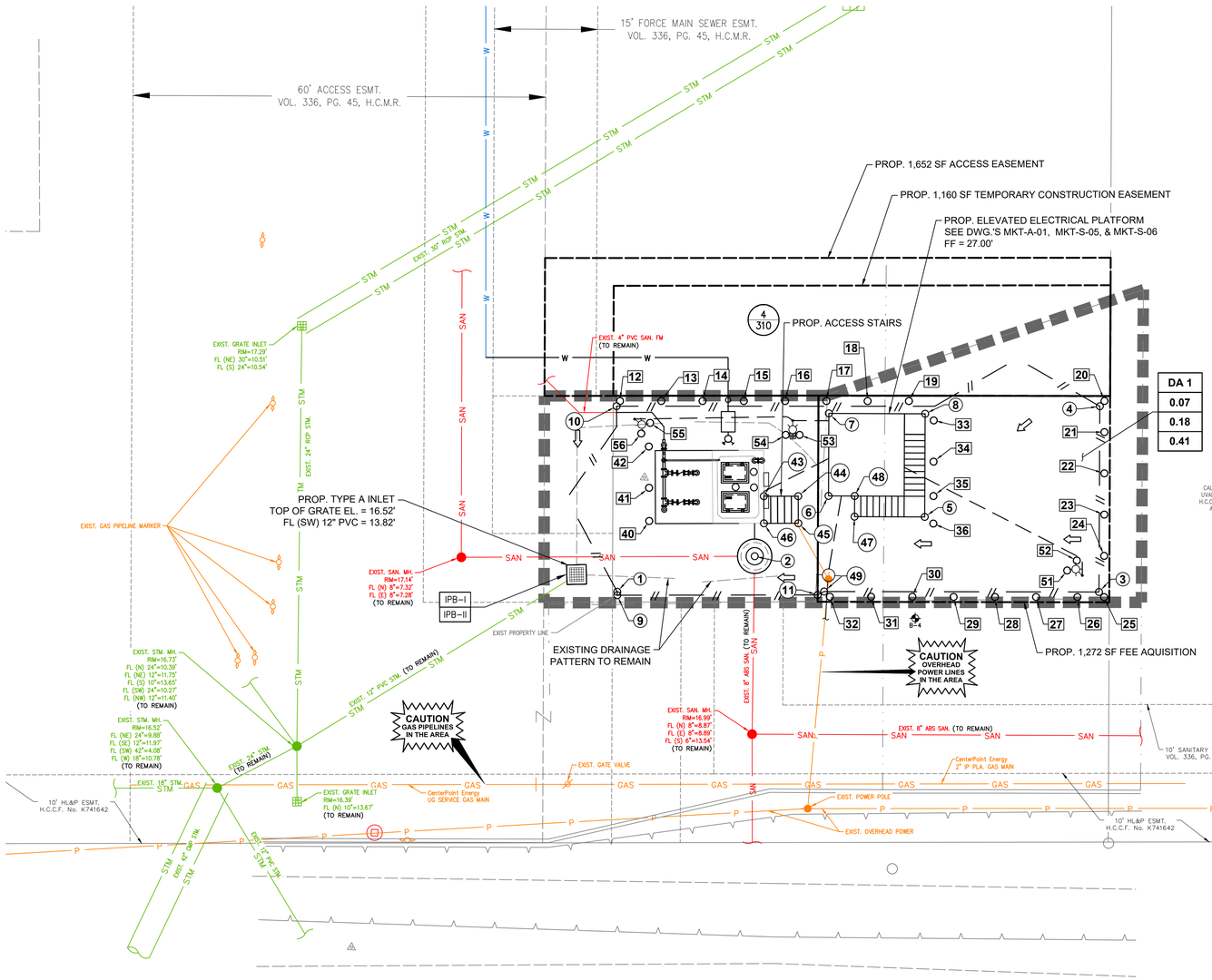

NOTES:

1. OFFSITE FLOW IS UNAFFECTED BY THE PROPOSED LIFT STATION STRUCTURE AND CONCRETE PAVING.
2. DRAINAGE AREA EXTENDS BEYOND THE LIMITS OF THIS SHEET.
3. CONTRACTOR TO SAW-CUT, REMOVE, AND REPLACE CONCRETE AS NECESSARY. NO SEPARATE PAY.
4. SAW-CUT AND REMOVE CONCRETE PAVEMENT AND INSTALL FOUNDATION AS SHOWN ON STRUCTURAL DWG. NO. MKT-S-06.

PROPOSED POINT TABLE

POINT	NORTHING	EASTING	DESCRIPTION	ELEVATION
1	13848211.34	3179021.19	PROP. FENCE CORNER	M.E.G.
2	13848217.69	3179040.83	PROP. SANITARY SEWER MANHOLE	M.E.G.
3	13848215.48	3179091.10	PROP. FENCE CORNER	M.E.G.
4	13848242.44	3179089.62	PROP. FENCE CORNER	M.E.G.
5	13848224.87	3179065.17	PROP. PLATFORM STAIRS	SEE DWG. NO. MKT-A-01
6	13848227.09	3179051.02	PROP. ELEVATED ELEC. PLATFORM	SEE DWG. NO. MKT-A-01
7	13848239.07	3179050.36	PROP. ELEVATED ELEC. PLATFORM	SEE DWG. NO. MKT-A-01
8	13848239.84	3179064.34	PROP. ELEVATED ELEC. PLATFORM	SEE DWG. NO. MKT-A-01
9	13848210.84	3179021.22	PROP. FENCE CORNER	M.E.G.
10	13848238.29	3179019.49	PROP. FENCE CORNER	M.E.G.
11	13848212.61	3179050.30	PROP. FENCE CORNER	M.E.G.
43	13848226.48	3179041.64	PROP. STAIRS	SEE DWG. NO. C-01
44	13848226.79	3179046.63	PROP. STAIRS	SEE DWG. NO. C-01
45	13848222.85	3179046.87	PROP. STAIRS	SEE DWG. NO. C-01
46	13848222.54	3179041.88	PROP. STAIRS	SEE DWG. NO. C-01
47	13848224.30	3179054.98	PROP. STAIRS	SEE DWG. NO. C-01
48	13848227.30	3179054.82	PROP. STAIRS	SEE DWG. NO. MKT-A-01
49	13848213.17	3179051.21	PROP. FENCE CORNER	0.00'

PROPOSED POINT TABLE

POINT	NORTHING	EASTING	DESCRIPTION
12	13848239.06	3179019.94	PROP. BOLLARD
13	13848239.42	3179025.93	PROP. BOLLARD
14	13848239.77	3179031.92	PROP. BOLLARD
15	13848240.13	3179037.91	PROP. BOLLARD
16	13848240.48	3179043.90	PROP. BOLLARD
17	13848240.84	3179049.89	PROP. BOLLARD
18	13848241.19	3179055.88	PROP. BOLLARD
19	13848241.55	3179061.87	PROP. BOLLARD
20	13848243.25	3179090.25	PROP. BOLLARD
21	13848238.73	3179090.51	PROP. BOLLARD
22	13848232.74	3179090.86	PROP. BOLLARD
23	13848226.75	3179091.20	PROP. BOLLARD
24	13848220.76	3179091.55	PROP. BOLLARD
25	13848214.77	3179091.90	PROP. BOLLARD
26	13848214.55	3179088.01	PROP. BOLLARD
27	13848214.20	3179082.02	PROP. BOLLARD
28	13848213.85	3179076.03	PROP. BOLLARD
29	13848213.51	3179070.05	PROP. BOLLARD
30	13848213.16	3179064.06	PROP. BOLLARD
31	13848212.81	3179058.07	PROP. BOLLARD
32	13848212.47	3179052.08	PROP. BOLLARD
33	13848238.95	3179065.64	PROP. BOLLARD
34	13848232.96	3179065.97	PROP. BOLLARD
35	13848227.97	3179066.25	PROP. BOLLARD
36	13848223.98	3179066.47	PROP. BOLLARD
40	13848221.89	3179025.21	PROP. BOLLARD
41	13848226.71	3179024.91	PROP. BOLLARD
42	13848232.70	3179024.52	PROP. BOLLARD
51	13848218.32	3179086.31	PROP. BOLLARD
52	13848219.85	3179087.61	PROP. BOLLARD
53	13848235.69	3179046.29	PROP. BOLLARD
54	13848235.58	3179044.29	PROP. BOLLARD
55	13848236.15	3179024.49	PROP. BOLLARD
56	13848234.53	3179023.31	PROP. BOLLARD

LEGEND

- EXISTING CONCRETE PAVEMENT
- ON-SITE SHEET FLOW DIRECTION
- OFFSITE SHEET FLOW DIRECTION (SEE NOTE 3)
- IPB-I — INLET PROTECTION BARRIER-STAGE I
- IPB-II — INLET PROTECTION BARRIER-STAGE II
- DRAINAGE AREA BOUNDARY
- XX — DRAINAGE AREA NO.
- X.XX — ACRES
- X.XX — 2-YR FLOW (CFS)
- X.XX — 100-YR FLOW (CFS)
- # / # — DETAIL NO. / DRAWING NO.
- SAW-CUT CONCRETE

10' 0' 10'
SCALE
1" = 10'

N W E S

NO.	DATE	REVISION	APP.

BENCHMARK:

CITY OF HOUSTON MONUMENT 5858-7504 IS A BRASS DISC IN CONCRETE STAMPED 150010, LOCATED ON THE NORTHWEST CORNER OF MARKET STREET BRIDGE APPROXIMATELY 0.20 MILE SOUTHWEST FROM THE INTERSECTION OF IH 10 IN KEY MAP 497J IN THE GREENS BAYOU WATERSHED.

ELEV. 30.07 FEET NAVD 1988, 2001 ADJUSTMENT (PROJECT DATUM)
ELEV. 30.17 FEET NAVD 1988, (GEOID 18')

FLOODPLAIN NOTE:

FLOODPLAIN REFERENCE MARK NUMBER 150010 IS A BRASS DISC IN CONCRETE LOCATED ON THE WEST SIDE OF BRIDGE ALONG MARKET ST. AT GREENS BAYOU.

ELEV. 30.07 FEET NAVD 1988, 2001 ADJUSTMENT
AS PER FIRM PANEL 48201C0720M DATED JANUARY 6, 2017. THIS TRACT LIES WITHIN THE 100-YEAR FLOODPLAIN.
100-YR FLOODPLAIN ELEV. 18.50'
500-YR FLOODPLAIN ELEV. 23.00'
FIRM PANEL: 48201C0720M

EXISTING UTILITY NOTE:

EXISTING UNDERGROUND UTILITY INFORMATION (TYPE, SIZE & OWNERSHIP) ARE SHOWN APPROXIMATELY BASED ON THE AVAILABLE RECORD DRAWINGS AND FIELD VERIFICATION (WHERE FEASIBLE) WITHOUT PROBING AND EXCAVATION. NO WARRANTY IS MADE AS TO THE ACCURACY OR COMPLETENESS OF UTILITY LOCATION SHOWN ON THE DRAWING. CAUTION SHOULD BE EXERCISED WHEN EXCAVATING OR BORE AND JACKING IN THE VICINITY OF UNDERGROUND UTILITIES. OWNERS OF THE UTILITIES SHOULD BE NOTIFIED PRIOR TO SUCH ACTIVITIES. CALL UTILITY COORDINATING COMMITTEE AT 713-223-4567, AT LEAST 48 HOURS PRIOR TO EXCAVATING IN THE STREET RIGHT-OF-WAY.

NOTICE:
FOR YOUR SAFETY, YOU ARE REQUIRED BY TEXAS LAW TO CALL 811 AT LEAST 48 HOURS BEFORE YOU DIG SO THAT UNDERGROUND LINES CAN BE MARKED. THIS SIGNATURE DOES NOT FULFILL YOUR OBLIGATION TO CALL 811

VERIFICATION OF PRIVATE UTILITY LINES

Date

CenterPoint Energy natural gas utilities shown. (Gas service lines are not shown). This signature not be used for conflict verification.

Signature valid for six months.

Date

CenterPoint Energy/UNDERGROUND Electrical Facilities Verification ONLY. (This signature verifies existing underground facilities - not to be used for conflict verification)

Signature valid for six months.

Date

Approved for AT&T underground conduit facilities only.
Signature valid for one year.

IDS Engineering Group
13430 NW. Freeway, Suite 700
Houston, Tx. 77040
713.462.3178
TxEng Firm 2726 | TxSurv Firm 10110700

SURVEYED BY: KUO & ASSOCIATES, INC.
TBPE FIRM #F-4578; TBPLS FIRM #1007560

THIS DOCUMENT IS RELEASED FOR THE PURPOSE OF REVIEW UNDER THE AUTHORITY OF MARCEL KHOUW, P.E. 101807 ON 05/27/2026. IT IS NOT TO BE USED FOR CONSTRUCTION PURPOSES.

CITY OF HOUSTON
HOUSTON PUBLIC WORKS

LIFT STATION RENEWAL AND REPLACEMENT FY 2023

MARKET STREET NO. 2 GRADING AND DRAINAGE PLAN

WBS NUMBER	FOR CITY OF HOUSTON USE ONLY
R-000267-0179-4	
DRAWING SCALE	
HORIZ: VALUE VERT: N/A	
CITY OF HOUSTON PM	
NAWARAJ PANTA, P.E.	

DWG. NO.	SHEET NO. 179 OF 361
MKT-C-06	

FILE PATH: \\idseg.com\FS\Projects\0000\005708500 CoH Lift Stations - FY 2023\CAD\DWG\PRODUCTION\179-MARKET ST GRADING.dwg

PLOTTED: 5/13/2026 6:37 PM

STORM SEWER CALCULATIONS

IDS ENGINEERING GROUP

CLIENT NAME: **CITY OF HOUSTON**
PROJECT NAME: **WBS NO. R-000267-0179-3 - MARKET ST. #2 LIFT STATION**
IDS JOB NO: **0057-085-00**
DATE PRINTED: January 28, 2026
DATE REVISED: January 28, 2026 BY: CM

SELECT STORM EVENT FREQUENCY: 2 year
SELECT APPROPRIATE LAND USE: Light Industrial
ENTER DESIGN CURB HEIGHT (inches): 0

Re-Generate Formulas

Line	Manhole or Inlet Number U / S	D / S	Reach Length (feet)	Diameter or Rise (inches)	Span (inches)	No. of Barrels	Pipe Material	Pipe Grade Minimum (%)	Pipe Grade Actual (%)	Area (acres)	Sum of Area (acres)	Runoff Coeff.	Sum of C x Area (acres)	Travel Time (minutes)	Time of Concentration (minutes)	Intensity (in./hr.)	Sum of Flows (cfs)	Design Flow (cfs)	Design Velocity (fps)	Actual Velocity (fps)	Hydraulic Gradient (%)	Change in Head (feet)	Upstream Top of Grate (feet)	Hydraulic Grade Upstream (feet)	Hydraulic Grade Downstream (feet)	Manhole Drop (D/S) (feet)	Pipe Flowline Upstream (feet)	Pipe Flowline Downstream (feet)	Depth from Gutter to HGL (feet)	Depth of Cover (feet)	Upstream NG Elev. (feet)	Depth from NG to HGL (feet)
1	A-1	OUT	50.56	12		1	RCP	0.440%	4.094%	0.07	0.07	0.65	0.04	3.66	21.2	4.09	0.18	7.21	9.18	0.23	0.003%	0.00	16.52	12.75	12.75	0.00	***13.82***	11.75	3.77	1.70	16.52	3.77

NOTES:
1. This spreadsheet has been developed using the City of Houston criteria outlined in the November 2023 Infrastructure Design Manual. The Rational Method has been used to calculate flows, and Manning's Formula for pipes flowing full has been used to calculate velocities.
2. This spreadsheet calculates rainfall intensity using the b, d, and e constants for Harris County and the City of Houston, as outlined in Appendix H of the Harris County Infrastructure Regulations, and Chapter 9 of the November 2023 City of Houston Infrastructure Design Manual.
3. Minimum storm sewer grades and maximum velocities as established in the City of Houston design criteria have been used to establish the grades used in this system.
4. Land Use "SFR" represents Single-Family Residential development. Land Use "MFR" represents Multi-Family Residential development.
5. Design flow and velocity are based entirely on pipe grade and represent the conditior when pipe is flowing full with the hydraulic grade line equal to the pipe grade, and are used to demonstrate that the pipe slopes used in the calculations conform to the City of Houston minimum and maximum standards.

Runoff Coefficient Table	
Land Use	C
SFR (> ½ ac. lots)	0.35
SFR (¼ - ½ ac. lots)	0.45
SFR (< ¼ ac. lots)	0.55
MFR (< 20 d.u./ac.)	0.65
MFR (>= 20 d.u./ac.)	0.80
Business Districts	0.80
Light Industrial	0.65
Heavy Industrial	0.75
Railroad Yard Areas	0.30
Parks/Open Areas	0.18
Land Use Varies	ENTER

Pipe Material	Mannings "n" Value	Pipe Description
CLAY	0.012	Extra Strength Vitrified Clay Pipe
CMP	0.024	Corrugated Metal Pipe
CMPSI	0.013	CMP w/ Smooth Interior
HDPE	0.013	High Density Polyethylene Pipe
PVC	0.013	Polyvinyl Chloride Pipe
RCA	0.013	Reinforced Concrete Arch Pipe
RCB	0.015	Reinforced Concrete Box Culvert
RCE	0.013	Reinforced Concrete Elliptical Pipe
RCP	0.013	Reinforced Concrete Pipe

Rainfall Freq. (yrs)	b	d	e
2 year	***48.35***	***9.07***	***0.7244***
5 year	52.32	7.88	0.6900
10 year	54.68	6.96	0.6623
25 year	57.79	5.89	0.6294
50 year	61.00	5.46	0.6096
100 year	60.66	4.44	0.5797
500 year	62.17	2.95	0.5196

Master Spreadsheet - Storm Sewer Calculations Updated 02/10/2025
\\idseg.com\FS\Projects\0000\005708500 CoH Lift Stations - FY 2023\Eng\Calcs\Drainage\[4. Market St. #2 Drainage Calcs.xlsx]CALCULATIONS

STORM SEWER CALCULATIONS

IDS ENGINEERING GROUP

CLIENT NAME: **CITY OF HOUSTON**
PROJECT NAME: **WBS NO. R-000267-0179-3 - MARKET ST. #2 LIFT STATION**
IDS JOB NO: **0057-085-00**
DATE PRINTED: January 28, 2026
DATE REVISED: January 28, 2026 BY: CM

SELECT STORM EVENT FREQUENCY: 100 year
SELECT APPROPRIATE LAND USE: Light Industrial
ENTER DESIGN CURB HEIGHT (inches): 0

Re-Generate Formulas

Line	Manhole or Inlet Number U / S	D / S	Reach Length (feet)	Diameter or Rise (inches)	Span (inches)	No. of Barrels	Pipe Material	Pipe Grade Minimum (%)	Pipe Grade Actual (%)	Area (acres)	Sum of Area (acres)	Runoff Coeff.	Sum of C x Area (acres)	Travel Time (minutes)	Time of Concentration (minutes)	Intensity (in./hr.)	Sum of Flows (cfs)	Design Flow (cfs)	Design Velocity (fps)	Actual Velocity (fps)	Hydraulic Gradient (%)	Change in Head (feet)	Upstream Top of Grate (feet)	Hydraulic Grade Upstream (feet)	Hydraulic Grade Downstream (feet)	Manhole Drop (D/S) (feet)	Pipe Flowline Upstream (feet)	Pipe Flowline Downstream (feet)	Depth from Gutter to HGL (feet)	Depth of Cover (feet)	Upstream NG Elev. (feet)	Depth from NG to HGL (feet)
1	A-1	OUT	50.56	12		1	RCP	0.440%	4.094%	0.07	0.07	0.65	0.04	1.62	21.2	9.24	0.41	7.21	9.18	0.52	0.013%	0.01	16.52	12.76	12.75	0.00	***13.82***	11.75	3.76	1.70	16.52	3.76

NOTES:
1. This spreadsheet has been developed using the City of Houston criteria outlined in the November 2023 Infrastructure Design Manual. The Rational Method has been used to calculate flows, and Manning's Formula for pipes flowing full has been used to calculate velocities.
2. This spreadsheet calculates rainfall intensity using the b, d, and e constants for Harris County and the City of Houston, as outlined in Appendix H of the Harris County Infrastructure Regulations, and Chapter 9 of the November 2023 City of Houston Infrastructure Design Manual.
3. Minimum storm sewer grades and maximum velocities as established in the City of Houston design criteria have been used to establish the grades used in this system.
4. Land Use "SFR" represents Single-Family Residential development. Land Use "MFR" represents Multi-Family Residential development.
5. Design flow and velocity are based entirely on pipe grade and represent the conditior when pipe is flowing full with the hydraulic grade line equal to the pipe grade, and are used to demonstrate that the pipe slopes used in the calculations conform to the City of Houston minimum and maximum standards.

Runoff Coefficient Table	
Land Use	C
SFR (> ½ ac. lots)	0.35
SFR (¼ - ½ ac. lots)	0.45
SFR (< ¼ ac. lots)	0.55
MFR (< 20 d.u./ac.)	0.65
MFR (>= 20 d.u./ac.)	0.80
Business Districts	0.80
Light Industrial	0.65
Heavy Industrial	0.75
Railroad Yard Areas	0.30
Parks/Open Areas	0.18
Land Use Varies	ENTER

Pipe Material	Mannings "n" Value	Pipe Description
CLAY	0.012	Extra Strength Vitrified Clay Pipe
CMP	0.024	Corrugated Metal Pipe
CMPSI	0.013	CMP w/ Smooth Interior
HDPE	0.013	High Density Polyethylene Pipe
PVC	0.013	Polyvinyl Chloride Pipe
RCA	0.013	Reinforced Concrete Arch Pipe
RCB	0.015	Reinforced Concrete Box Culvert
RCE	0.013	Reinforced Concrete Elliptical Pipe
RCP	0.013	Reinforced Concrete Pipe

Rainfall Freq. (yrs)	b	d	e
2 year	48.35	9.07	0.7244
5 year	52.32	7.88	0.6900
10 year	54.68	6.96	0.6623
25 year	57.79	5.89	0.6294
50 year	61.00	5.46	0.6096
100 year	***60.66***	***4.44***	***0.5797***
500 year	62.17	2.95	0.5196

Master Spreadsheet - Storm Sewer Calculations Updated 02/10/2025
\\idseg.com\FS\Projects\0000\005708500 CoH Lift Stations - FY 2023\Eng\Calcs\Drainage\[4. Market St. #2 Drainage Calcs.xlsx]CALCULATIONS

NO.	DATE	REVISION	APP.

IDS Engineering Group
13430 NW. Freeway, Suite 700
Houston, Tx. 77040
713.462.3178
TxEng Firm 2726 | TxSurv Firm 10110700

SURVEYED BY: KUO & ASSOCIATES, INC.
TBPE FIRM #F-4578; TBPLS FIRM #1007560

THIS DOCUMENT IS RELEASED FOR THE PURPOSE OF REVIEW UNDER THE AUTHORITY OF MARCEL KHOUW, P.E. 101807 ON 05/27/2026. IT IS NOT TO BE USED FOR CONSTRUCTION PURPOSES.

CITY OF HOUSTON
HOUSTON PUBLIC WORKS

LIFT STATION RENEWAL AND REPLACEMENT FY 2023

MARKET STREET NO. 2 DRAINAGE CALCULATIONS

WBS NUMBER	FOR CITY OF HOUSTON USE ONLY
R-000267-0179-4	
DRAWING SCALE	
HORIZ: VALUE VERT: N/A	
CITY OF HOUSTON PM	
NAWARAJ PANTA, P.E.	
DWG. NO. MKT-C-07	SHEET NO. 180 OF 361

FILE PATH: \\idseg.com\FS\Projects\0000\005708500 CoH Lift Stations - FY 2023\CAD\DWG\PRODUCTION\180-MARKET ST CALCULATIONS.dwg

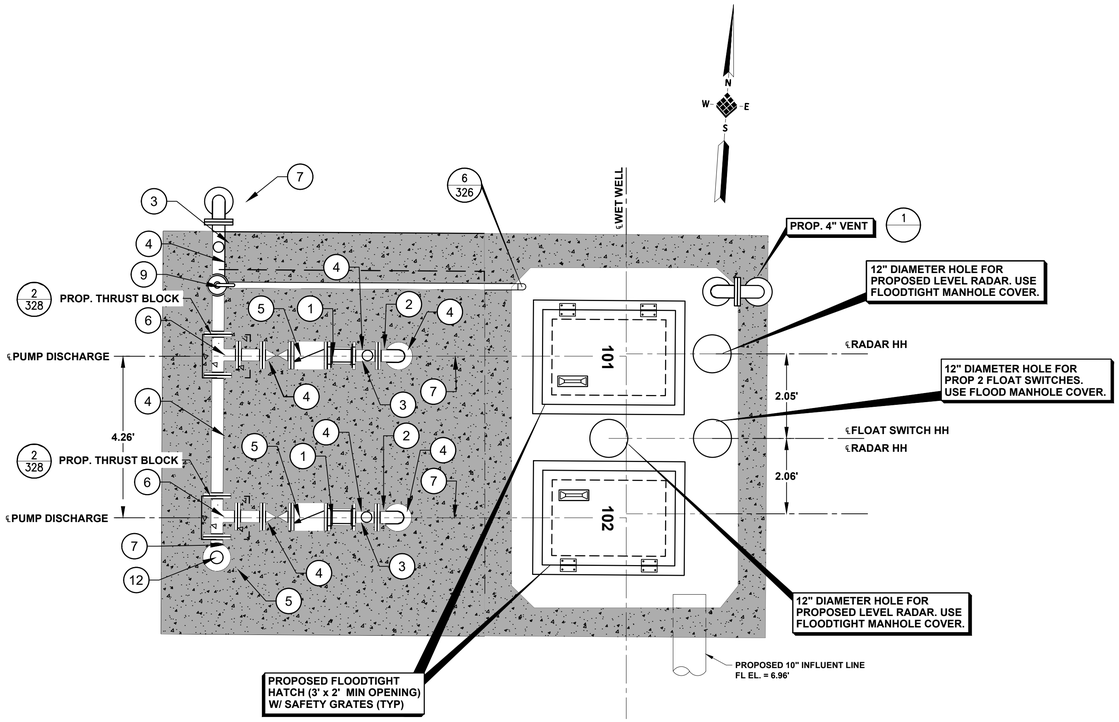

PLAN VIEW AT GRADE

SCALE: 1" = 2'

KEYED NOTE	ITEM	QTY
1	CHECK VALVE (4")	2
2	FLEXIBLE COUPLING (4")	3
3	PRESSURE GAUGE ASSEMBLY	1
4	SPOOL PIECE (4")	18
5	PLUG VALVE (4")	2
6	TEE (4" x 4")	1
7	90° ELBOW (4")	8
8	316 STAINLESS STEEL SUPPORT	6
9	2" AIR RELEASE & VACUUM VALVE ASSEMBLY	1
10	ADJUSTABLE PIPE SUPPORT	4
11	ECCENTRIC REDUCER (4"x3")	2
12	BLIND FLANGE (4")	1

NOTES:

1. ABRASIVE BLAST AND COAT ALL PIPING AND FITTINGS NOT BEING REPLACED IN WET WELL.
2. CONTRACTOR TO VERIFY DIMENSIONS REQUIRED TO INSTALL AND OPERATE VALVES.
3. EXISTING LIFT STATION WET WELL STRUCTURE TO REMAIN.
4. UV PROTECTIVE COATINGS ARE REQUIRED BY THE CITY OF HOUSTON ON ALL VENT PIPES.
5. LABEL HATCHES WITH THE CORRESPONDING PUMP NUMBER USING A 12–INCH BY 6–INCH ALUMINUM PLATE ENGRAVED WITH 1.5–INCH LETTERING WELDED TO THE HATCH.
6. CONTRACTOR TO CONFIRM SIZE AND LOCATION OF THE WET WELL HATCHES PER HATCH AND PUMP MANUFACTURER REQUIREMENTS.
7. PUMP AND ANCHOR BOLTS ARE TO BE ADHESIVE TYPE, AND EMBEDDED IN THE CONCRETE LAB. CONTRACTOR TO SUBMIT DESIGN OF PUMP ANCHOR BOLTS AND PATTEN, INCLUDING CALCULATIONS, DURING SHOP DRAWING SUBMISSION.
8. ALL PIPING IN THE WET WELL SHALL BE FLANGED. NO FLANGED COUPLING ADAPTORS, OR VICTAULIC STYLE COUPLINGS SHALL BE PERMITTED INSIDE OF THE WET WELL.
9. ACCESS HATCHES SHALL BE ALUMINUM AND FOREST GREEN. SAFETY GRATING SHALL BE FURNISHED WITH SAFETY ORANGE POWDER COAT FINISH.
10. WET WELL TO BE COATED WITH PROTECTIVE COATING PER PROJECT SPECIFICATIONS, CONSULT WITH CITY OF HOUSTON PROJECT MANAGER FOR APPROVED PRODUCTS. COATING SHALL COVER ALL CONCRETE SURFACES, AND SHALL EXTEND TO A MINIMUM OF 12" BELOW THE LOW WATER ELEVATION.

NO.	DATE	REVISION	APP.

LEGEND

- (#) DETAIL NO. / SHEET NO.
- EXISTING CONCRETE
- PROPOSED CONCRETE

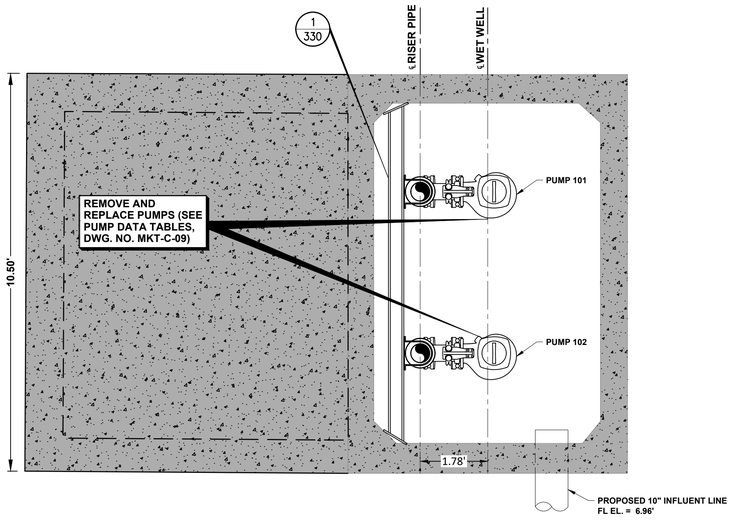

SECTION A-A VIEW (A)

SCALE: 1" = 2'

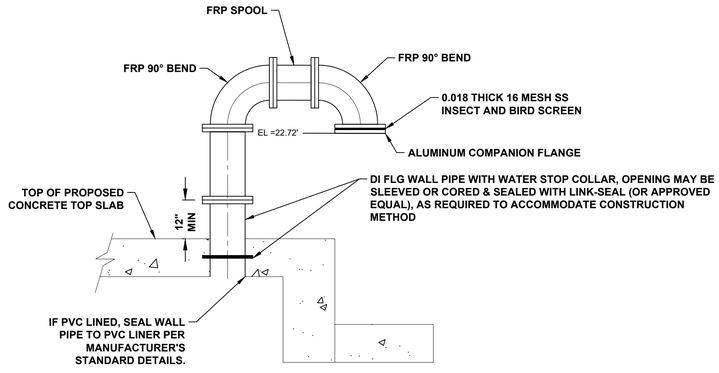

PROPOSED STRUCTURE PENETRATION (1)

SCALE: N.T.S.

IDS Engineering Group
13430 NW. Freeway, Suite 700
Houston, Tx. 77040
713.462.3178
TxEng Firm 2726 | TxSurv Firm 10110700

SURVEYED BY: KUO & ASSOCIATES, INC.
TBPE FIRM #F-4578; TBPLS FIRM #1007560

THIS DOCUMENT IS RELEASED FOR THE PURPOSE OF REVIEW UNDER THE AUTHORITY OF MARCEL KHOUW, P.E. 101807 ON 05/27/2026. IT IS NOT TO BE USED FOR CONSTRUCTION PURPOSES.

CITY OF HOUSTON
HOUSTON PUBLIC WORKS

LIFT STATION RENEWAL AND REPLACEMENT FY 2023

MARKET STREET NO. 2 LIFT STATION PLAN AT GRADE AND BASE

WBS NUMBER	FOR CITY OF HOUSTON USE ONLY
R–000267–0179–4	
DRAWING SCALE	
HORIZ: AS NOTED VERT: N/A	
CITY OF HOUSTON PM	
NAWARAJ PANTA, P.E.	
DWG. NO. MKT–C–08	SHEET NO. 181 OF 361

PLOTTED: 5/13/2026 6:37 PM
FILE PATH: \\idseg.com\FS\Projects\0000\005708500 CoH Lift Stations – FY 2023\CAD\DWG\PRODUCTION\181-MARKET ST PLAN AT GRADE.dwg

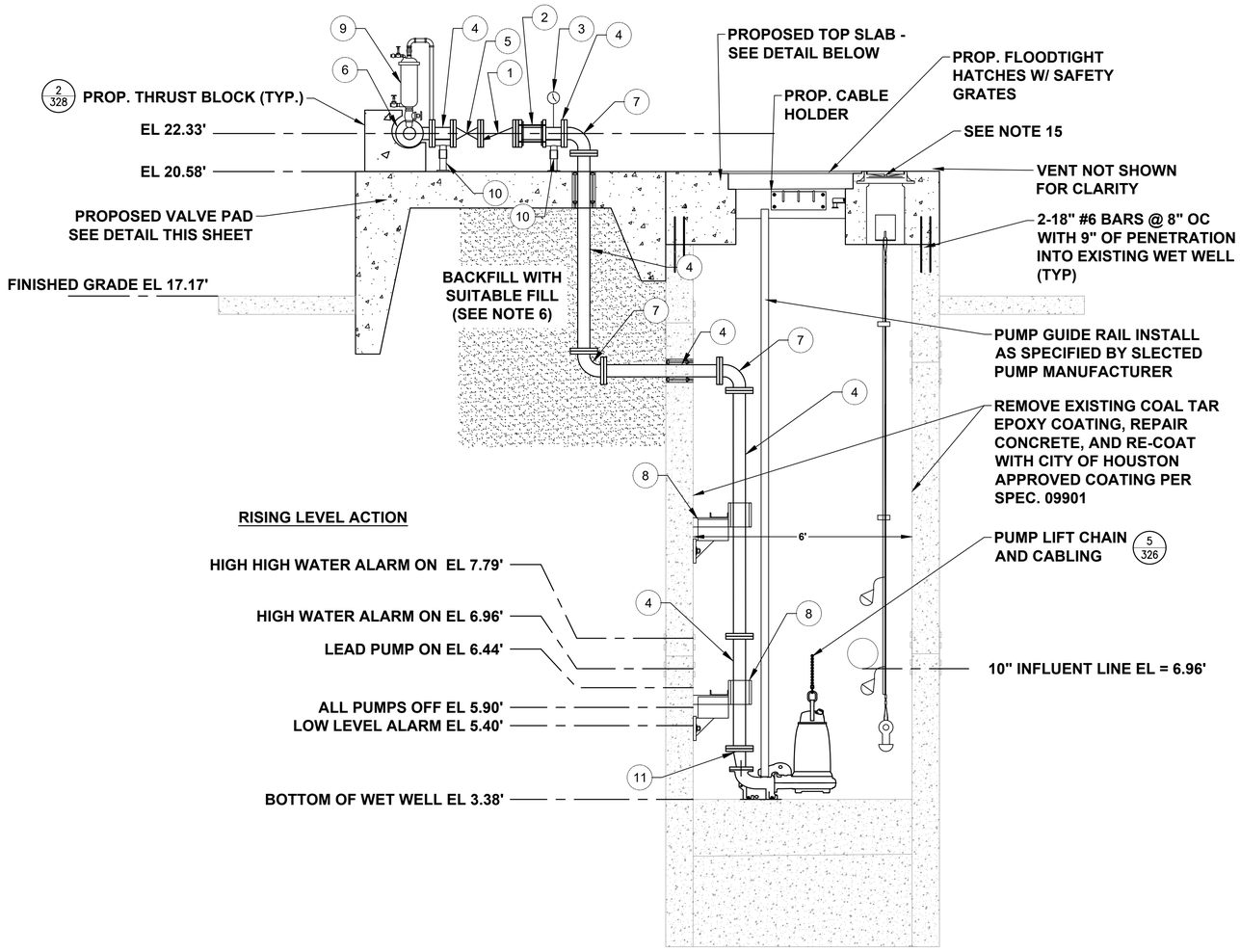

SECTIONAL ELEVATION A

SCALE: 1" = 2'

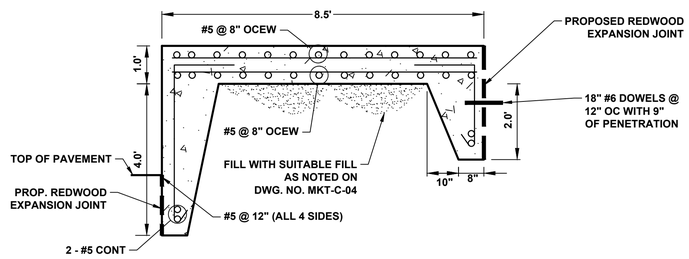

DISCHARGE PIPING CONCRETE SLAB DETAIL

SCALE: 1" = 2'

STATION OPERATING TABLES		
PROPOSED CONDITION - 0.21 MGD		
RISING WATER LEVEL		
WATER LEVEL ELEVATION	ACTION	PUMP(S) IN OPERATION
5.90	PUMPS OFF LEVEL - NO ACTION	ALL PUMPS ARE OFF
6.44	LEAD PUMP TURNS ON	LEAD PUMP ON
6.96	HIGH WATER ALARM ON	HIGH WATER ALARM SOUND
7.79	HIGH HIGH WATER ALARM ON (FLOAT LEVEL ON)	FIRM PUMPS ON (FLOATS)
FALLING WATER LEVEL		
WATER LEVEL ELEVATION	ACTION	PUMP(S) IN OPERATION
7.79	FLOAT OFF LEVEL	FIRM PUMPS OFF (FLOATS)
6.96	HIGH WATER LEVEL ALARM OFF	LEAD PUMP ON
6.44	LEAD PUMP TURNS OFF	ALL PUMPS STOPPED - STANDBY PUMP SWITCHES TO LEAD PUMP
5.94	LOW LEVEL ALARM	-

PUMP DATA TABLE*

PUMP CHARACTERISTICS	PUMP NO. 1	PUMP NO. 2
MOTOR DATA		
NOMIMAL SIZE (HP)	5.5	5.5
MAX SPEED (RPM)	2611	2611
SOLIDS PASSAGE		
MINIMUM SPHERE (IN)	3	3
CAPACITY (GPM)		
DESIGN	150	150
RUNOUT	520	520
DISCHARGE HEAD (FT)		
DESIGN	54.22	54.22
RUNOUT	9	9
SHUT OFF	84.1	84.1
EFFICIENCY (%)		
DESIGN	52.9	52.9
NPSHR (FT)		
DESIGN	8.6	8.6
RUNOUT	32.8	32.8
PUMP CYCLE TIME (MIN)	6	6
CUMULATIVE CAPACITY (GPM)	148.0	-

*FLYGT Concertor 6020 N80 used for all pump calculations.

KEYED NOTE	ITEM	QTY
1	CHECK VALVE (4")	2
2	FLEXIBLE COUPLING (4")	3
3	PRESSURE GAUGE ASSEMBLY	1
4	SPOOL PIECE (4")	18
5	PLUG VALVE (4")	2
6	TEE (4" x 4")	1
7	90° ELBOW (4")	8
8	316 STAINLESS STEEL SUPPORT	4
9	2" AIR RELEASE & VACUUM VALVE ASSEMBLY	1
10	ADJUSTABLE PIPE SUPPORT	4
11	ECCENTRIC REDUCER (4"x3")	2
12	BLIND FLANGE (4")	1

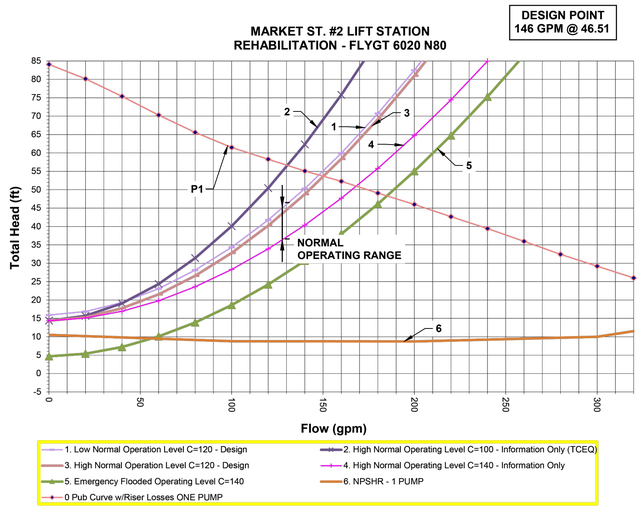

LEGEND

- # / # — DETAIL NO. / SHEET NO.
- EXISTING CONCRETE
- PROPOSED CONCRETE
- PROP. SUITABLE FILL

NOTES:

1. ABRASIVE BLAST AND COAT ALL PIPING AND FITTINGS NOT BEING REPLACED IN WET WELL.
2. CONTRACTOR TO VERIFY DIMENSIONS REQUIRED TO INSTALL AND OPERATE VALVES.
3. EXISTING LIFT STATION WET WELL STRUCTURE TO REMAIN.
4. UV PROTECTIVE COATINGS ARE REQUIRED BY THE CITY OF HOUSTON ON ALL VENT PIPES.
5. LABEL HATCHES WITH THE CORRESPONDING PUMP NUMBER USING A 12–INCH BY 6–INCH ALUMINUM PLATE ENGRAVED WITH 1.5–INCH LETTERING WELDED TO THE HATCH.
6. FILL VOID LEFT BY REMOVAL OF EXISTING VALVE VAULT WITH SUITABLE FILL.
7. SEE ELECTRICAL PLANS FOR ADDITIONAL IMPROVEMENTS.
8. ABRASIVE BLAST AND COAT TO BE IN ACCORDANCE WITH SYSTEM 108 PER SPEC SECTION 09901 PART 2.03J.
9. CONTRACTOR TO CONFIRM SIZE AND LOCATION OF THE WET WELL HATCHES PER HATCH AND PUMP MANUFACTURER REQUIREMENTS
10. PUMP AND ANCHOR BOLTS ARE THE BE ADHESIVE TYPE, AND EMBEDDED IN THE CONCRETE SLAB. CONTRACTOR TO SUBMIT DESIGN OF PUMP ANCHOR BOLTS AND PATTERN, INCLUDING CALCULATIONS, DURING SHOP DRAWINGS SUBMISSION.
11. ALL PIPING IN THE WET WELL SHALL BE FLANGED. NO FLANGED COUPLING ADAPTORS, OR VICTAULIC STYLE COUPLINGS SHALL BE PERMITTED INSIDE OF THE WET WELL.
12. ACCESS HATCHES SHALL BE FOREST GREEN. SAFETY GRATING SHALL BE FURNISHED WITH SAFETY ORANGE POWDER COAT FINISH.
13. INSTALL PLUG VALVES TO OPEN UPWARD AND TO CLOSE TO A SEATING POSITION.
14. INSTALL CHECK VALVES SO THAT THE WEIGHT LEVER POSITION IS APPROXIMATELY 45 DEGREES BELOW THE VALVE HORIZONTAL CENTER LINE IN THE CLOSE POSITION AND APPROXIMATELY 45 DEGREES ABOVE THE HORIZONTAL CENTER LINE IN THE FULL OPEN POSITION.
15. PROPOSED FLOAT SWITCH AND LEVEL RADARS SHOWN FOR REFERENCE. REFER TO DWG. NO. MKT–C–08 AND MKT–E–05 FOR LOCATION AND SIZE.
16. CONTRACTOR TO SUBMIT A WET WELL TOP SLAB STRUCTURAL PLAN SIGN AND SEALED BY A REGISTERED ENGINEER IN THE STATE OF TEXAS.
17. WET WELL TO BE COATED WITH PROTECTIVE COATING PER PROJECT SPECIFICATIONS, CONSULT WITH CITY OF HOUSTON PROJECT MANAGER FOR APPROVED PRODUCTS. COATING SHALL COVER ALL CONCRETE SURFACES, AND SHALL EXTEND TO A MINIMUM OF 12" BELOW THE LOW WATER ELEVATION.

NO.	DATE	REVISION	APP.

IDS Engineering Group
13430 NW. Freeway, Suite 700
Houston, Tx. 77040
713.462.3178
TxEng Firm 2726 | TxSurv Firm 10110700

SURVEYED BY: KUO & ASSOCIATES, INC.
TBPE FIRM #F–4578; TBPLS FIRM #1007560

THIS DOCUMENT IS RELEASED FOR THE PURPOSE OF REVIEW UNDER THE AUTHORITY OF MARCEL KHOUW, P.E. 101807 ON 05/27/2026. IT IS NOT TO BE USED FOR CONSTRUCTION PURPOSES.

CITY OF HOUSTON
HOUSTON PUBLIC WORKS

LIFT STATION RENEWAL AND REPLACEMENT FY 2023

MARKET STREET NO. 2 LIFT STATION ELEVATION SECTION

WBS NUMBER	FOR CITY OF HOUSTON USE ONLY
R–000267–0179–4	
DRAWING SCALE	
HORIZ: AS NOTED VERT: N/A	
CITY OF HOUSTON PM	
NAWARAJ PANTA, P.E.	
DWG. NO. MKT–C–09	SHEET NO. 182 OF 361

PLOTTED: 5/13/2026 6:37 PM
FILE PATH: \\idseg.com\FS\Projects\0000\005708500 CoH Lift Stations – FY 2023\CAD\DWG\PRODUCTION\182–MARKET ST ELEV SECTION.dwg

PLOTTED: 5/13/2026 6:37 PM

FILE PATH: \\tdseg.com\FS\Projects\0000\005708500 CoH Lift Stations - FY 2023\CAD\DWG\PRODUCTION\183-MARKET ST TOP SLAB DETAIL.dwg

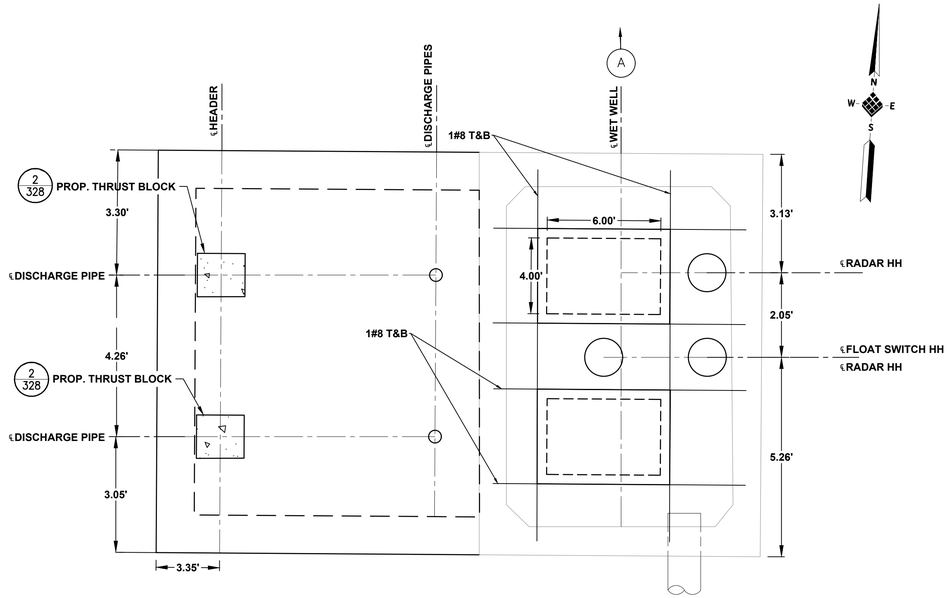

TOP SLAB DETAIL

SCALE: 1" = 2'

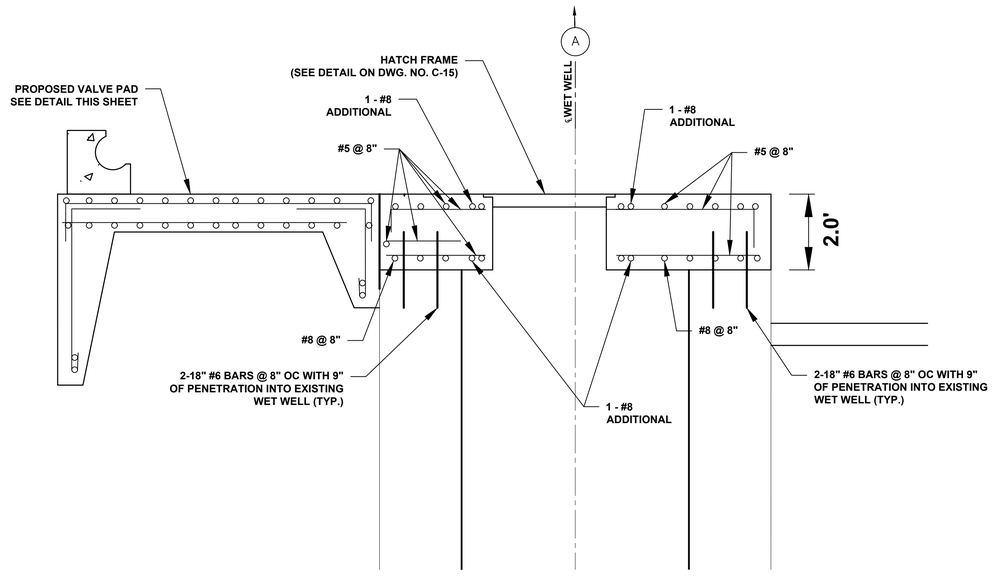

WET WELL TOP SLAB DETAIL

SCALE: 1" = 2' (SEE NOTE 16)

2' 0' 2'

SCALE

1" = 2'

NO.	DATE	REVISION	APP.

NOTES:

1. CONTRACTOR TO CONFIRM SIZE AND LOCATION OF THE WET WELL HATCHES PER HATCH AND PUMP MANUFACTURER REQUIREMENTS
2. CONTRACTOR TO SUBMIT A WET WELL TOP SLAB STRUCTURAL PLAN SIGNED AND SEALED BY A REGISTERED ENGINEER IN THE STATE OF TEXAS.

LEGEND

- (#/#) DETAIL NO. / SHEET NO.
- EXISTING CONCRETE
- PROPOSED CONCRETE

KEYED NOTE	ITEM	QTY
1	CHECK VALVE (4")	2
2	FLEXIBLE COUPLING (4")	3
3	PRESSURE GAUGE ASSEMBLY	1
4	SPOOL PIECE (4")	18
5	PLUG VALVE (4")	2
6	TEE (4" x 4")	1
7	90° ELBOW (4")	8
8	316 STAINLESS STEEL SUPPORT	6
9	2" AIR RELEASE & VACUUM VALVE ASSEMBLY	1
10	ADJUSTABLE PIPE SUPPORT	4
11	ECCENTRIC REDUCER (4"x3")	2
12	BLIND FLANGE (4")	1

IDS Engineering Group
13430 NW. Freeway, Suite 700
Houston, Tx. 77040
713.462.3178
TxEng Firm 2726 | TxSurv Firm 10110700

SURVEYED BY: KUO & ASSOCIATES, INC.
TBPE FIRM #F-4578; TBPLS FIRM #1007560

THIS DOCUMENT IS RELEASED FOR THE PURPOSE OF REVIEW UNDER THE AUTHORITY OF MARCEL KHOUW, P.E. 101807 ON 05/27/2026. IT IS NOT TO BE USED FOR CONSTRUCTION PURPOSES.

CITY OF HOUSTON
HOUSTON PUBLIC WORKS

LIFT STATION RENEWAL AND REPLACEMENT FY 2023

MARKET STREET NO. 2 LIFT STATION TOP SLAB DETAIL

WBS NUMBER	FOR CITY OF HOUSTON USE ONLY
R-000267-0179-4	
DRAWING SCALE	
HORIZ: 1" = 2' VERT: N/A	
CITY OF HOUSTON PM	
NAWARAJ PANTA, P.E.	

DWG. NO.	SHEET NO. 183 OF 361
MKT-C-10	

PLOTTED: 5/13/2026 6:37 PM

FILE PATH: \\idseg.com\FS\Projects\0000\005708500 CoH Lift Stations - FY 2023\CAD\DWG\PRODUCTION\184-MARKET ST ELEC PLATFORM.dwg

NO.	DATE	REVISION	APP.

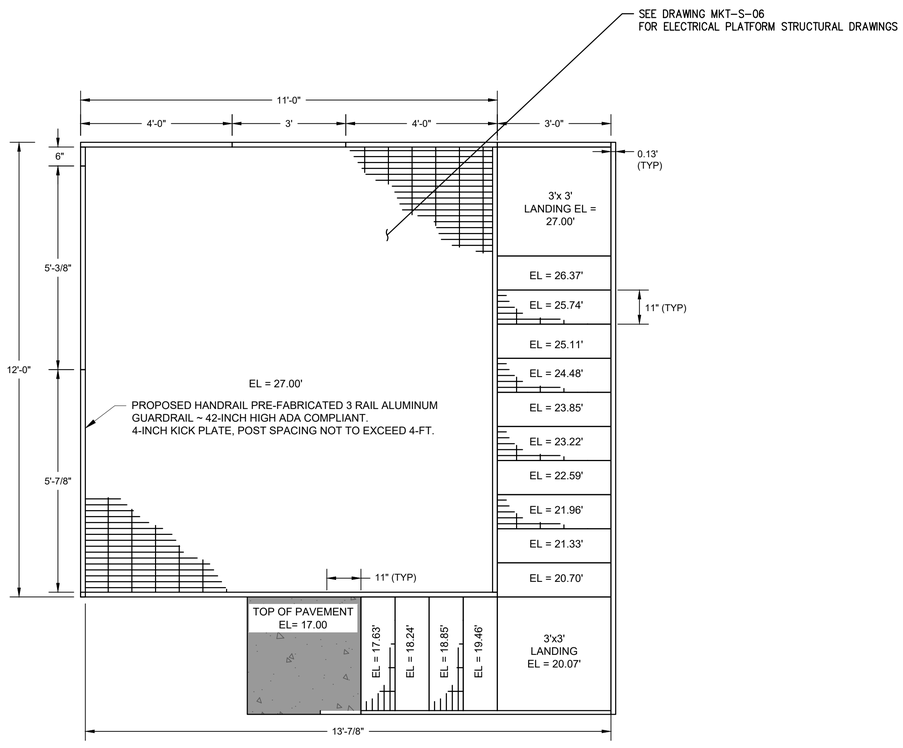

NOTES:

1. CONTRACTOR TO SUBMIT SHOP DRAWINGS FOR PLATFORM, BUILDING, STAIRCASE, HANDRAIL, AND GUARDRAIL SIGNED AND SEALED BY A PROFESSIONAL ENGINEER LICENSED IN THE STATE OF TEXAS FOR APPROVAL TO ENGINEER OF RECORD PRIOR TO PROCUREMENT AND INSTALLATION OF ABOVE STRUCTURAL ELEMENTS.
2. PLATFORM SHOULD BE DESIGNED TO WITHSTAND LOADS FROM A 500-YEAR EVENT, BASED ON THE FEMA WSEL FOR A 500-YR FLOOD EVENT.
3. PLATFORM GRATING WILL BE ALUMINUM POWDER COATED FOREST GREEN.
4. PLATFORM SHALL BE DESIGNED TO MEET THE ULTIMATE DESIGN WIND SPEED (VULT) OF 139 MPH IN 3 SECOND GUSTS AS REQUIRED FOR RISK CATEGORY II STRUCTURES PER SECTION 1609.3 AND TABLE 1609.3.1 OF THE 2012 IBC WITH CITY OF HOUSTON AMENDMENTS.

IDS Engineering Group
13430 NW. Freeway, Suite 700
Houston, Tx. 77040
713.462.3178
TxEng Firm 2726 | TxSurv Firm 10110700

SURVEYED BY: KUO & ASSOCIATES, INC.
TBPE FIRM #F-4578; TBPLS FIRM #1007560

THIS DOCUMENT IS RELEASED FOR THE PURPOSE OF REVIEW UNDER THE AUTHORITY OF MARCEL KHOUW, P.E. 101807 ON 05/27/2026. IT IS NOT TO BE USED FOR CONSTRUCTION PURPOSES.

CITY OF HOUSTON
HOUSTON PUBLIC WORKS

LIFT STATION RENEWAL AND REPLACEMENT FY 2023

MARKET STREET NO. 2 LIFT STATION ELEVATED ELECTRICAL PLATFORM

WBS NUMBER	FOR CITY OF HOUSTON USE ONLY
R-000267-0179-4	
DRAWING SCALE	
HORIZ: 1" = 2' VERT: N/A	
CITY OF HOUSTON PM	
NAWARAJ PANTA, P.E.	

DWG. NO.	SHEET NO. 184 OF 361
MKT-A-01	

PLOTTED: 5/13/2026 6:37 PM

FILE PATH: \\idseg.com\FS\Projects\0000\005708500 CoH Lift Stations - FY 2023\CAD\DWG\PRODUCTION\185-MARKET ST RECORD DWG.dwg

NO.	DATE	REVISION	APP.

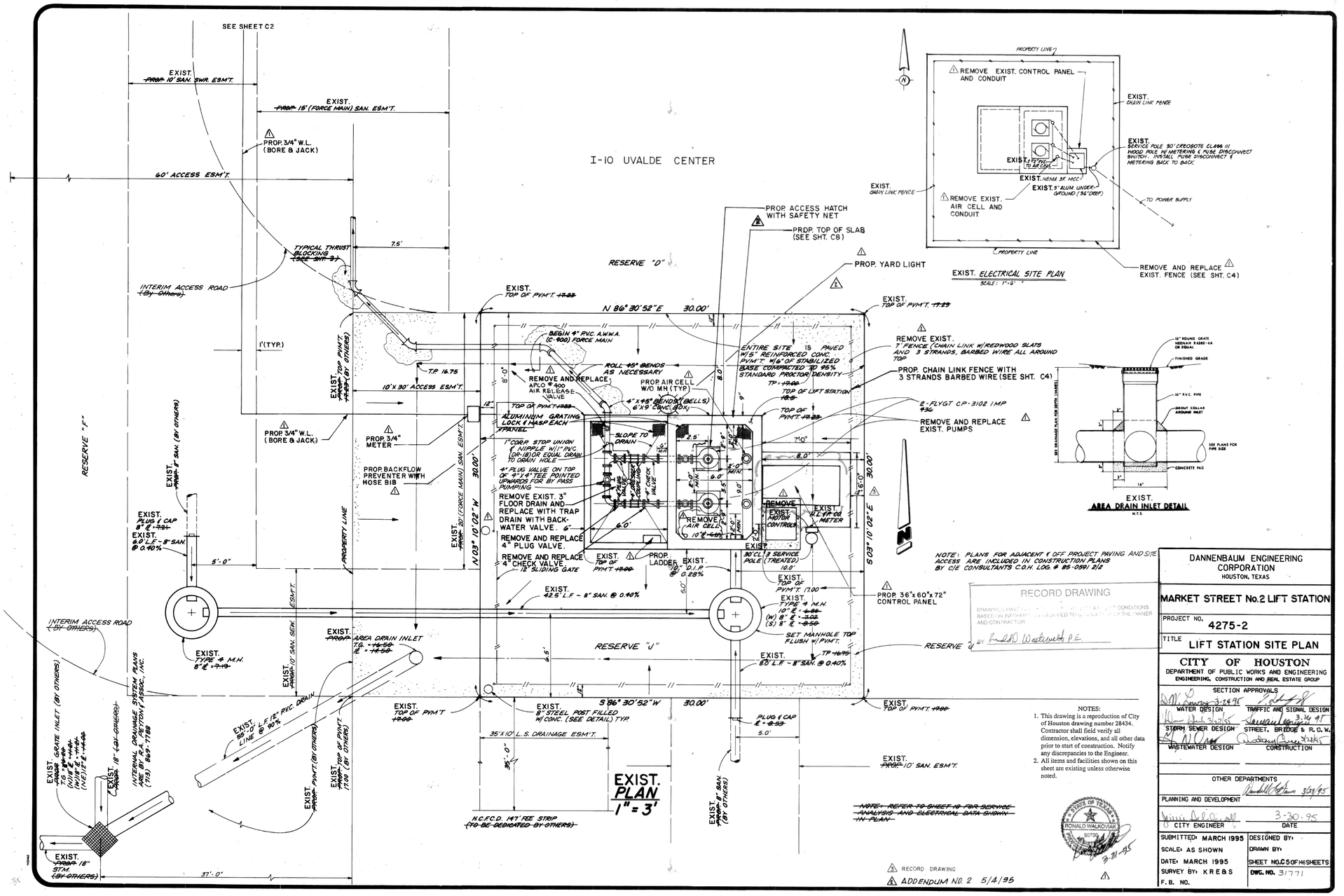

NOTE: PLANS FOR ADJACENT & OFF PROJECT PAVING AND SITE ACCESS ARE INCLUDED IN CONSTRUCTION PLANS BY CIE CONSULTANTS C.O.H. LOG. # 85-0591 2/2

RECORD DRAWING

DRAWING(S) HAVE BEEN PREPARED FROM INFORMATION FURNISHED TO THE ENGINEER BY THE OWNER AND CONTRACTOR

Ronald D. Westbrook P.E.

NOTES:
1. This drawing is a reproduction of City of Houston drawing number 28434. Contractor shall field verify all dimension, elevations, and all other data prior to start of construction. Notify any discrepancies to the Engineer.
2. All items and facilities shown on this sheet are existing unless otherwise noted.

~~NOTE: REFER TO SHEET 10 FOR SERVICE ANALYSIS AND ELECTRICAL DATA SHOWN IN PLAN~~

STATE OF TEXAS RONALD WALKOWIAK 90750 3-31-95

3 RECORD DRAWING
2 ADDENDUM NO. 2 5/4/95

DANNENBAUM ENGINEERING CORPORATION
HOUSTON, TEXAS

MARKET STREET No.2 LIFT STATION

PROJECT NO. 4275-2

TITLE LIFT STATION SITE PLAN

CITY OF HOUSTON
DEPARTMENT OF PUBLIC WORKS AND ENGINEERING
ENGINEERING, CONSTRUCTION AND REAL ESTATE GROUP

SECTION APPROVALS

WATER DESIGN	TRAFFIC AND SIGNAL DESIGN 3.14.95
STORM SEWER DESIGN	STREET, BRIDGE & R.O.W.
WASTEWATER DESIGN	CONSTRUCTION 3/24/95

OTHER DEPARTMENTS
PLANNING AND DEVELOPMENT 3/29/95

CITY ENGINEER 3-30-95 DATE

SUBMITTED: MARCH 1995 DESIGNED BY:
SCALE: AS SHOWN DRAWN BY:
DATE: MARCH 1995 SHEET NO. C5 OF 16 SHEETS
SURVEY BY: K R E & S DWG. NO. 31771
F.B. NO.

IDS Engineering Group
13430 NW. Freeway, Suite 700
Houston, Tx. 77040
713.462.3178
TxEng Firm 2726 | TxSurv Firm 10110700

SURVEYED BY: KUO & ASSOCIATES, INC.
TBPE FIRM #F-4578; TBPLS FIRM #1007560

THIS DOCUMENT IS RELEASED FOR THE PURPOSE OF REVIEW UNDER THE AUTHORITY OF MARCEL KHOUW, P.E. 101807 ON 05/27/2026. IT IS NOT TO BE USED FOR CONSTRUCTION PURPOSES.

CITY OF HOUSTON
HOUSTON PUBLIC WORKS

LIFT STATION RENEWAL AND REPLACEMENT FY 2023

EXISTING LIFT STATION RECORD DRAWING (SHEET 1 OF 2)

WBS NUMBER	FOR CITY OF HOUSTON USE ONLY
R-000267-0179-4	
DRAWING SCALE	
HORIZ: AS NOTED VERT: N/A	
CITY OF HOUSTON PM	
NAWARAJ PANTA, P.E.	

DWG. NO. MKT-C-11

SHEET NO. 185 OF 361

FOR REFERENCE ONLY

PLOTTED: 5/13/2026 6:37 PM

NO.	DATE	REVISION	APP.

NOTE: WET WELL WALL SHALL BE REHABILITED BY REMOVING 3" (MIN.) CONCRETE BY HYDROJETTING AND REPAIRED WITH MAINSTAY DS-4 LINER WITH RELINER MSP(ML-72 MONOLITHIC LINER). TEST PROJECT OF THE CITY OF HOUSTON REHABILITATION PROGRAM.

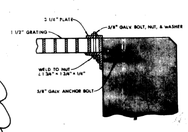

DETAIL "A"
N.T.S.

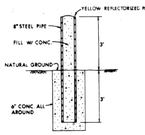

GUARD POST

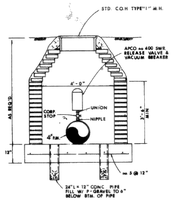

TYPE "L" M.H. W/ AIR RELEASE VALVE

NOTE: GRATING SHALL BE 1-1/2 INCHES IN DEPTH UNLESS OTHERWISE INDICATED ON THE DRAWINGS. BEARING BARS SHALL BE AT LEAST 3/16 INCH THICK, AND SPACED AT 1-3/16 CENTERS, AND TIED WITH TRANSVERSE BARS SPACED NO MORE THAN 2 INCHES ON CENTER.

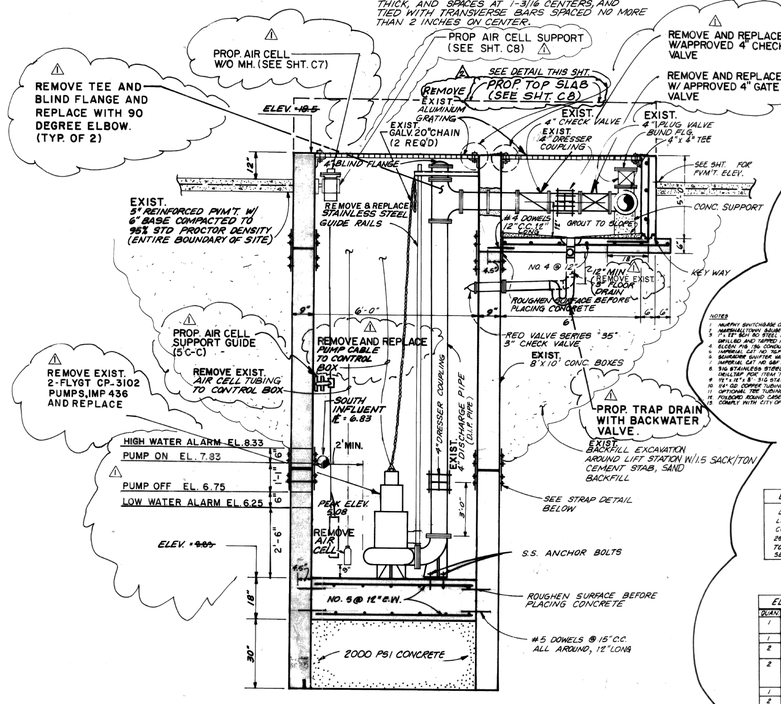

EXIST.
ELEVATION
1"=2'
SEE SITE PLAN SHEET

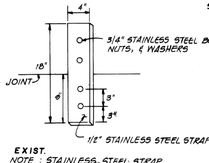

EXIST.
NOTE: STAINLESS STEEL STRAP TO BE PLACED AT JOINTS SPACED AT 1/3 WIDTH OF WALL ALL AROUND. PLACE A NEOPRENE GASKET BETWEEN WALL AND STRAP

EXIST.

PUMP LEVELS	
PUMP ON E	~~5.83~~
PUMP OFF E	~~4.83~~
HIGH LEVEL E	~~7.08~~
ALARM	

RECORD DRAWING
DRAWINGS HAVE BEEN REVISED TO REFLECT AS-BUILT CONDITIONS BASED ON INFORMATION PROVIDED TO CONSULTANT BY THE OWNER AND CONTRACTOR.
BY Ronald A. Wattyett P.E.

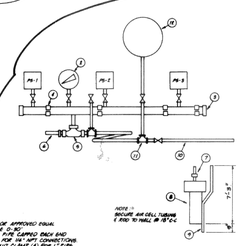

NOTES
1. MURPHY SWITCHGAGE OR APPROVED EQUAL
2. 3"ø STEEL PIPE SCH. 40 BLACK
3. 3"ø ST. BUT. NO. STEEL PIPE CAPPED, TACK AND DRILLED AND TAPPED FOR 1/4" NPT CONNECTIONS.
4. ELKEN PIN 3/4" CONDUIT CLAMP (4) FOR 1" TYP.
5. HARDWARE GALVANIZED, TYP. 3/8"ø
6. 3/16 STAINLESS STEEL, AIR BOTTLE W/ PIPE CAP 3"x12"
7. SUPERIOR 221 OR 88P WELL CONNECTOR WELL
8. 3/16 STAINLESS STEEL, AIR BOTTLE W/ PIPE CAP 3"x12" WELLTAP FOR 1"ø&4"
9. 1"ø x 20'± S.S. 316 STAINLESS STEEL, WELDED TO AIR BOTTLE
10. 1/4" OD COPPER TUBING CONNECTOR FOR PRESSURE RECORDER
11. OPTIONAL 100' TUBING CONNECTOR FOR PRESSURE RECORDER
12. FOXBORO ROUND CASE 12" CIRCULAR CHART LEVEL RECORDER 0-30'
13. COMPLY WITH CITY OF HOUSTON SPEC. #0415 (TY. VFD).

WET WELL LEVEL CONTROL
N.T.S.

ELECTRICAL LOAD ANALYSIS	
LIGHTING	0.0 AMPS
LIFT PUMPS (2) @ 4 H.P.	18.0 AMPS
CONTROLS/RECPT./MISC.	5.0 AMPS
25% OF 4 H.P. PUMP	2.0 AMPS
TOTAL	25.0 AMPS
SERVICE IS SIZED AT 115/230V 3ø 3W	

ELECTRICAL EQUIPMENT SCHEDULE		
QUAN.	MANUFACTURER	DESCRIPTION
1	SQUARE "D" CLASS 9998 MODEL 4	NEMA 3R OUTDOOR ENCL. 9"H. 20"W.
1	SQUARE "D" # 2323	100 A/3P FUSED SW TC
2	SQUARE "D" # FAL 34100	100 A/3P CIRCUIT BREAKERS
2	SQUARE "D" CLASS 8538 TYPE 324	AC COMBINATION STARTER NEMA SIZE 2 W/HAND-OFF-AUTOMATIC SELECTOR SWITCH
1	SQUARE "D" # D3150	50 A/3P CIRCUIT BREAKER
2	FLYGT # C 3102	4 H.P./3ø LIFT PUMPS
1	GENERAL ELECTRIC	8 CKT PANEL NEMA 1 C.B. (4) 20/1P & (4) 2 M.C.B.

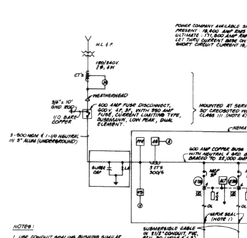
PHASE CONVERTER AND LOCAL SHORT CIRCUIT CURRENT: PRESENT 15,000 AMP RMS SYM. ULTIMATE 75,000 AMP RMS SYM. 1ø, 115 VOLTS SUPPLY BRK. ON 115 KVA AMP SHORT CIRCUIT CURRENT 10,000 AMP RMS SYM.
NEMA 3R ENCLOSURE
600 AMP FUSE DISCONNECT, NON-AUTOMATIC, 600 VOLTS WITH TWO 400 AMP FUSES, 3 POLE, 3 WIRE, 3 PHASE, 60 CYCLE, SOLID NEUTRAL, LOW PEAK, DUAL ELEMENT.
MOUNTED AT SERVICE POLE
3/0 GROUNDED HOOD
NEMA 3R NEC ENCLOSURE
NOTES:
1. LINE CONDUIT INSULATED BUSHING SIMILAR TO LB ELECT. MFG. CO. TYPE 3368, MEDIUM.
2. ALL CONDUIT TO BE 3/4" MIN. GALV. STEEL, UNLESS OTHERWISE NOTED.
3. SUBMERSIBLE CABLE SHALL NOT HAVE SPLICES BETWEEN PUMP AND CONTROLS.
4. CONTRACTOR SHALL COORDINATE WITH HOUSTON LIGHTING & POWER CO. FOR INSTALLATION OF SERVICE POLE, TRANSFORMER, AND SERVICE.
5. SEPARATE CONDUITS FOR EACH CABLE OR TUBE. EACH CONDUIT AS APPROVED.

ONE LINE DIAGRAM
N.T.S.

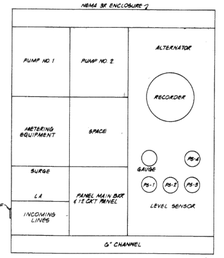

MOTOR CONTROL CENTER

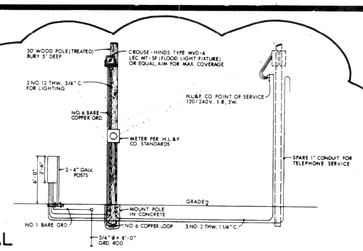

SERVICE ENTRY DETAIL
N.T.S.

✱ EXIST. ELECTRICAL AND CONTROL DETAILS FOR CONTRACTORS INFORMATION ONLY.

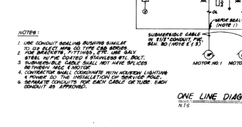

ALTERNATOR CONTROL
N.T.S.

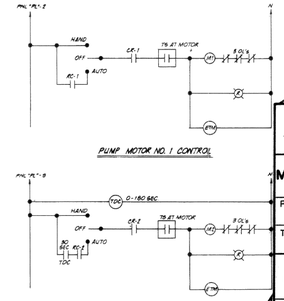

PUMP MOTOR NO. 1 CONTROL

PUMP MOTOR NO. 2 CONTROL

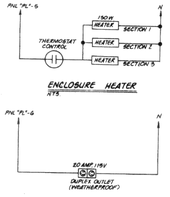

ENCLOSURE HEATER
N.T.S.

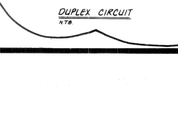

DUPLEX CIRCUIT
N.T.S.

PS-1, PS-2 M1, M2	- CLOSED - RUNNING
PS-1, PS-2 M1, M2, OR M3 OR M1	- CLOSED - RUNNING
PS-1 M1 OR M2	- CLOSED - RUNNING
NONE CLOSED ALL MOTORS OFF	

OPERATION

NOTES:
1. This drawing is a reproduction of City of Houston drawing number 28434. Contractor shall field verify all dimension, elevations, and all other data prior to start of construction. Notify any discrepancies to the Engineer.
2. All items and facilities shown on this sheet are existing unless otherwise noted.

STATE OF TEXAS · RONALD WALROD LAKE · 50730 · LICENSED PROFESSIONAL ENGINEER · 5-31-95

2 ADDENDUM NO. 2 5/4/95

DANNENBAUM ENGINEERING CORPORATION HOUSTON, TEXAS	
MARKET STREET No. 2 LIFT STATION	
PROJECT NO. 4275-2	
TITLE LIFT STATION ELEVATION	
CITY OF HOUSTON DEPARTMENT OF PUBLIC WORKS AND ENGINEERING ENGINEERING, CONSTRUCTION AND REAL ESTATE GROUP	
SECTION APPROVALS	
WATER DESIGN	TRAFFIC AND SIGNAL DESIGN 3-24-95
STORM SEWER DESIGN	STREET, BRIDGE & R.O.W. 3-24-95
WASTEWATER DESIGN	CONSTRUCTION
OTHER DEPARTMENTS	
PLANNING AND DEVELOPMENT	5/27/95
CITY ENGINEER	3-30-95 DATE
SUBMITTED: MARCH 1995	DESIGNED BY:
SCALE: AS SHOWN	DRAWN BY:
DATE: MARCH 1995	SHEET NO. 6 OF 146 SHEETS
SURVEY BY: KRE & S	DWG. NO. 3/771
F. B. NO.	

FOR REFERENCE ONLY

IDS Engineering Group
13430 NW. Freeway, Suite 700
Houston, Tx. 77040
713.462.3178
TxEng Firm 2726 | TxSurv Firm 10110700
SURVEYED BY: KUO & ASSOCIATES, INC.
TBPE FIRM #F-4578; TBPLS FIRM #1007560

THIS DOCUMENT IS RELEASED FOR THE PURPOSE OF REVIEW UNDER THE AUTHORITY OF MARCEL KHOUW, P.E. 101807 ON 05/27/2026. IT IS NOT TO BE USED FOR CONSTRUCTION PURPOSES.

CITY OF HOUSTON
HOUSTON PUBLIC WORKS

LIFT STATION RENEWAL AND REPLACEMENT FY 2023

EXISTING LIFT STATION RECORD DRAWING (SHEET 2 OF 2)

WBS NUMBER	FOR CITY OF HOUSTON USE ONLY
R-000267-0179-4	
DRAWING SCALE	
HORIZ: AS NOTED VERT: N/A	
CITY OF HOUSTON PM	
NAWARAJ PANTA, P.E.	
DWG. NO. MKT-C-12	SHEET NO. 186 OF 361

FILE PATH: \\idseg.com\FS\Projects\0000\005708500 CoH Lift Stations - FY 2023\CAD\DWG\PRODUCTION\186-MARKET ST RECORD DWG.dwg

PLOTTED: 5/21/2019 1:28 PM

NO.	DATE	REVISION	APP.

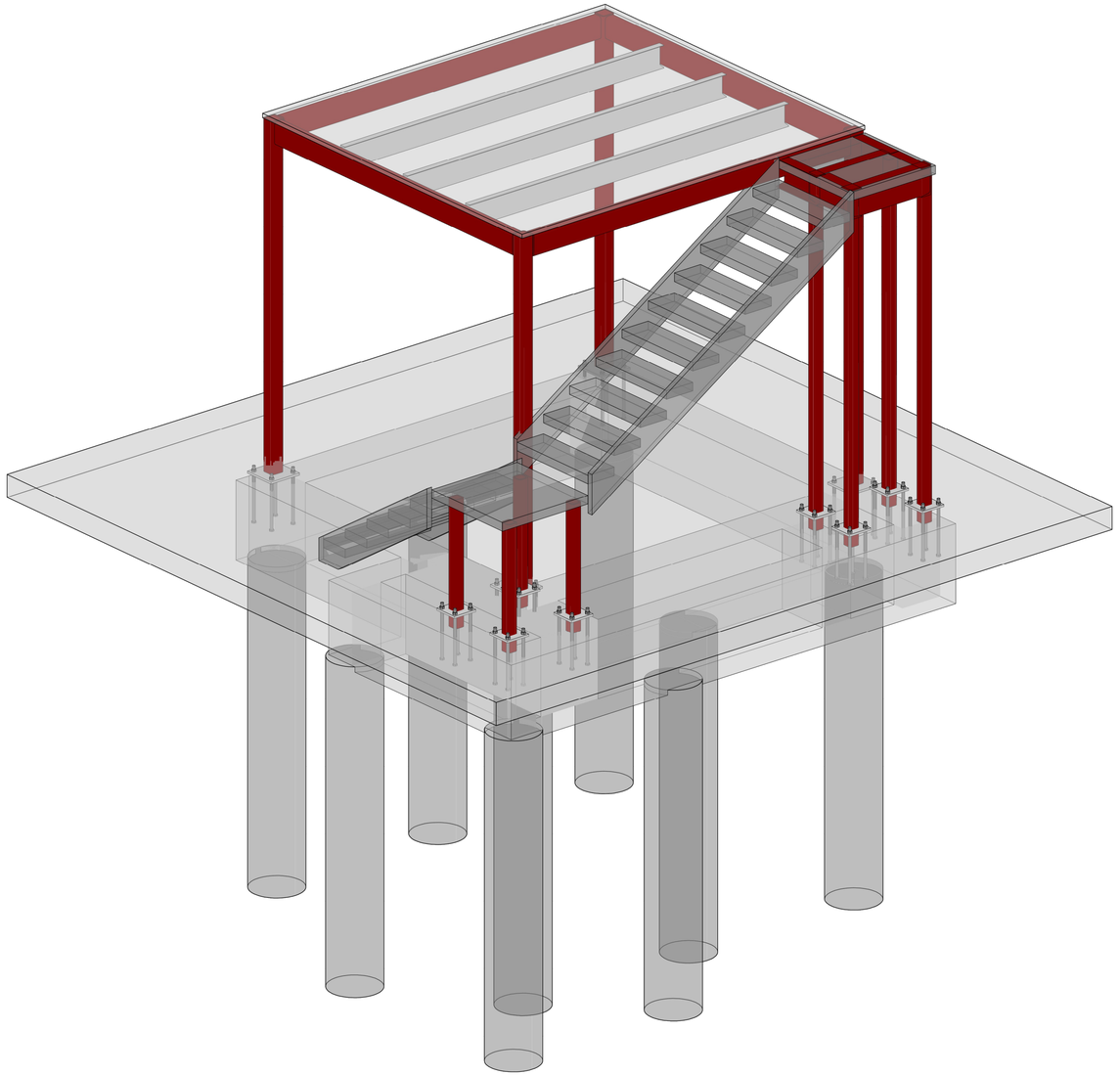

1 ELECTRICAL BUILDING - 3 D

IDS Engineering Group
13430 NW. Freeway, Suite 700
Houston, Tx. 77040
713.462.3178
TxEng Firm 2726 / TxSurv Firm 10110700

CONCEPT ENGINEERS
TX. FIRM REGISTRATION # F-04417
Structures for the whole community

PRELIMINARY
NOT FOR CONSTRUCTION,
BIDDING, OR PERMIT PURPOSES.
FOR REVIEW ONLY.
DAVID MOORE
TEXAS LICENSE NO. 139405
Date: 05/08/26

CITY OF HOUSTON
DEPARTMENT OF PUBLIC WORKS AND ENGINEERING

LIFT STATION RENEWAL AND REPLACEMENT FY 2023

MARKET ST. NO 2 LIFT STATION 3D MODEL

WBS NUMBER	FOR CITY OF HOUSTON USE ONLY
R-000267-0179-4	
DRAWING SCALE	
AS NOTED	
CITY OF HOUSTON PM	
NAWARAJ PANTA, P.E.	
SHEET NO. 187 OF 361	

DWG. NO. MKT-S-01

IDS JOB No. 0057-085-00

FILE PATH: G:\COMMERCIAL PROJECTS\24137 - Lift Station Rehab & Construction\STRUCTURAL\JV_DWGS\XREF\24137-TBlock.dwg

PLOTTED: 5/21/2019 1:28 PM

DESIGN CRITERIA

1. DESIGN CODE INTERNATIONAL BUILDING CODE 2021 WITH CITY OF HOUSTON AMENDMENTS
2. DESIGN LOADS:
   A. LIVE LOADS: (PSF)DEAD LOADS

SLABS OF GRADE	100 PSF	GENERATOR WEIGHT	XX LBS
STORAGE & MECHANICAL	150 PSF	ELECTRICAL BUILDING WEIGHT	XXLBS

   B. DEAD LOADS (SUPERIMPOSED)

SLABS OF GRADE	15	PSF
STORAGE & MECHANICAL	15	PSF

	UNIFORM LOADS	CONCENTRATED LOADS
STAIRS & EXISTING WAY	100 PSF	300 LBS
HANDRAILS & GUARD RAILS	50 LB/FT	200 LBS

3. WIND SPEED 147 MPH 3 SEC. GUST (ULTIMATE)
   EXPOSURE CATEGORY "C"
   RISK CATEGORY III
   DESIGN WIND FORCE ON FRP BUILDING XX LBS
   DESIGN WIND FORCE ON ELECTRICAL BUILDING XX LBS

GENERAL NOTES

1. THE CONTRACTOR SHALL COMPARE THE STRUCTURAL DRAWINGS WITH THE ARCHITECTURAL, CIVIL, PLUMBING, MECHANICAL AND ELECTRICAL DRAWINGS AS TO LAYOUT DIMENSIONS AND ELEVATIONS. ALL DISCREPANCIES, IF ANY ARE FOUND, SHALL BE REPORTED TO THE ARCHITECT FOR PROPER ADJUSTMENT BEFORE PROCEEDING WITH WORK. ANY DISCREPANCIES WITH THE STRUCTURAL DOCUMENTS SHALL BE IMMEDIATELY BROUGHT TO THE ATTENTION OF THE ARCHITECT/ENGINEER PRIOR TO THE SUBMISSION OF BIDS OF PROPOSALS, BEFORE COMMENCING THE WORK IN QUESTION. NO FIELD CHANGES OR DEVIATIONS FROM THE DESIGN ARE TO BE MADE WITHOUT PRIOR WRITTEN APPROVAL OF THE ARCHITECT AND/OR STRUCTURAL ENGINEER. NO CHANGE ORDER CONSIDERATION WILL BE GIVEN TO CHANGES FOR WHICH THE ARCHITECT AND/OR ENGINEER WERE NOT CONTACTED PRIOR TO CONSTRUCTION OF THE AFFECTED ITEM.
2. IN THE EVENT THAT CERTAIN FEATURES OF THE CONSTRUCTION ARE NOT FULLY SHOWN IN THE DRAWING OR CALLED OUT IN THE STRUCTURAL NOTES OR IN THE SPECIFICATIONS, THEN SUCH CONSTRUCTION SHALL BE IN THE SAME CHARACTER FOR SIMILAR CONDITIONS THAT ARE SHOWN OR CALLED FOR.
3. SEE ARCHITECTURAL DRAWINGS FOR FLOOR ELEVATIONS, SLOPE, AND THE LOCATION OF DEPRESSED FLOOR AREAS, AND OTHER REQUIREMENTS AT COLUMNS, WALLS, STAIRWELLS, SLABS, ETC. THE CONTRACTOR SHALL COMPARE THE STRUCTURAL SECTIONS WITH THE ARCHITECTURAL SECTIONS AND REPORT ANY DISCREPANCY TO THE ARCHITECT PRIOR TO FABRICATING OR INSTALLING STRUCTURAL MEMBERS.
4. PRINCIPAL OPENINGS THROUGH THE FRAMING ARE SHOWN ON DRAWINGS. THE CONTRACTOR SHALL EXAMINE THE ARCHITECTURAL AND MECHANICAL DRAWINGS FOR THE REQUIRED OPENINGS AS HE SHALL PROVIDE FOR ALL OPENINGS WHETHER SHOWN ON THE DRAWINGS OR NOT AND SHALL VERIFY SIZE AND LOCATION OF ALL OPENINGS WITH THE MECHANICAL CONTRACTOR. ANY DEVIATION FROM THE OPENINGS SHOWN ON THE STRUCTURAL DRAWINGS SHALL BE BROUGHT TO THE ENGINEER'S ATTENTION FOR APPROVAL.
5. REFER TO THE SPECIFICATIONS PROVIDED WITH THIS SUBMITTAL FOR THE REQUIRED STRUCTURAL SUBMITTALS THAT MUST BE SUBMITTED FOR E.O.R. REVIEW.
6. SPECIFICATIONS ARE PART OF THE CONSTRUCTION DOCUMENTS AND MUST BE USED IN CONJUNCTION WITH THE DRAWINGS.
7. DETAILS LABELED "TYPICAL DETAILS" ON DRAWINGS APPLY TO SITUATIONS OCCURRING ON THE PROJECT THAT ARE THE SAME OR SIMILAR TO THOSE SPECIFICALLY DETAILED. SUCH DETAILS APPLY WHETHER OR NOT THEY ARE REFERENCED AT EACH LOCATION. NOTIFY E.O.R. OF CONFLICTS REGARDING APPLICABILITY OF "TYPICAL DETAILS".
8. DO NOT LOAD THE SLAB ON GRADE WITH ERECTION CRANES OR ERECTION EQUIPMENT. THE SLAB HAS NOT BEEN DESIGNED FOR CRANE LOADS AND WILL REQUIRE AN INCREASE OF THICKNESS AND/OR REINFORCEMENT. OBTAIN E.O.R. APPROVAL ON PROPOSED CRANE SUPPORT PLAN FOR SLABS PRIOR TO COMMENCING WORK.
9. DO NOT STORE OR STACK CONSTRUCTION MATERIALS ON POURED OR ERECTED FLOOR/ROOFS IN EXCESS OF 80 PERCENT OF LIVE LOAD. CONTRACTOR SHALL ENSURE THAT ALL SUB-CONTRACTORS ARE INFORMED OF LOAD RESTRICTIONS. AVOID IMPACT WHEN PLACING MATERIALS OF POURED OR ERECTED SLABS FLOOR OR ROOF.
10. THE CONTRACT STRUCTURAL DOCUMENTS REPRESENT THE FINISHED STRUCTURE. THE CONTRACTOR IS RESPONSIBLE FOR THE MEANS OR METHODS OF CONSTRUCTION, PROVIDE ALL MEASURES REQUIRED TO PROTECT THE STRUCTURE, WORKMEN AND OTHER PERSONS DURING CONSTRUCTION; INCLUDING SHORING FOR CONSTRUCTION EQUIPMENT, SHORING FOR THE BUILDING, FORMS AND SCAFFOLDING, SHORING FOR THE RETAINING WALLS AND OTHER TEMPORARY SUPPORTS REQUIRED.
11. ALL STAIR MEMBERS INCLUDING, BUT NOT LIMITED TO, STRINGERS AND HANDRAILS SHALL BE DESIGNED BY STAIR ENGINEER AND STEEL FABRICATOR.
12. SHOP DRAWINGS AND OTHER ITEMS SHALL BE SUBMITTED TO THE ENGINEER FOR REVIEW PRIOR TO FABRICATION. ALL SHOP DRAWINGS SHALL BE REVIEWED BY THE GENERAL CONTRACTOR BEFORE SUBMITTAL. THE ENGINEER'S REVIEW IS TO BE FOR CONFORMANCE WITH THE DESIGN CONCEPT AND GENERAL COMPLIANCE WITH THE RELEVANT CONTRACT DOCUMENTS. THE ENGINEER'S REVIEW DOES NOT RELIEVE THE CONTRACTOR OF THE SOLE RESPONSIBILITY TO REVIEW, CHECK AND COORDINATE THE SHOP DRAWINGS PRIOR TO SUBMISSION. THE CONTRACTOR REMAINS SOLELY RESPONSIBLE FOR ERRORS AND OMISSIONS ASSOCIATED WITH THE PREPARATION OF SHOP DRAWINGS AS THEY PERTAIN TO MEMBER SIZES, DETAILS, DIMENSIONS, ETC.
13. SHOP DRAWINGS SHALL BE PREPARED WITH SUFFICIENT DETAIL AND NOTATION FOR FIELD ERECTION AND INSTALLATION. PHOTO COPIES OF THE CONTRACT DRAWINGS FOR USE AS SHOP DRAWINGS WILL NOT BE PERMITTED.

FOUNDATION NOTES

1. THE FOUNDATION SYSTEM HAS BEEN DESIGNED BASED ON THE FOLLOWING RECOMMENDATIONS SPECIFIED IN THE GEOTECHNICAL INVESTIGATION REPORT NUMBER HGT2210460.1.1 (C) BY HVJ ASSOCIATES, INC., DATED 03/31/2026, THE FOUNDATION SYSTEM IS DRILLED STRAIGHT SHAFTS AND AND HAS BEEN DESIGNED USING THE CAPACITIES THAT CAN BE FOUND IN THE GEOTECHNICAL REPORT. REFER TO PLAN FOR TOTAL DEPTH BELOW EXISTING GRADE. CONCRETE SHOULD BE PLACED IN THE DRILLED HOLES WITHIN FOUR HOURS OF EXCAVATION TO REDUCE THE RISK OF GROUNDWATER SEEPAGE, DETERIORATION OF THE FOUNDATION BEARING SURFACE AND UNDERREAM COLLAPSE. REFER TO THE GEOTECHNICAL REPORT.
2. THE CONTRACTOR MUST OBTAIN A COPY OF THE GEOTECHNICAL REPORT DESCRIBED ABOVE AND FOLLOW ALL RECOMMENDATIONS IN REGARDS TO SOIL PREPARATION, COMPACTION, REMOVAL AND FILL REQUIREMENTS AS NECESSARY TO ACHIEVE THE DESIGN SOIL BEARING PRESSURE CAPACITY IF REQUIRED.
3. IN GENERAL SITE PREPARATION SHOULD CONSIST OF REMOVING ANY EXISTING FOUNDATIONS, PAVED AREAS, GRASS, TREE ROOTS, AND STRIPPING ORGANIC TOP SOILS. THE EXPOSED SUBGRADE SHOULD BE PROOF-ROLLED TO DETECT LOCAL WEAK AREAS WHICH SHOULD BE EXCAVATED, PROCESSED, AND RECOMPACTED IN LOOSE LIFTS OF APPROXIMATELY EIGHT-INCH THICKNESS. IN FLOOR SLAB, SUBGRADE SOILS SHOULD BE COMPACTED TO A MINIMUM OF 95% OR THE PROCTOR MAXIMUM DRY DENSITY (ASTM D698) AT A MOISTURE CONTENT WITHIN -1% TO +3% OF MAXIMUM MOISTURE. TREE STUMPS, IF PRESENT, SHOULD BE REMOVED BELOW FLOOR SLAB OR PAVEMENT GRADE, AND REMOVE 2 FEET OF EXISTING SOIL AND REPLACE WITH SELECTED FILL AS PER CITY OF HOUSTON STANDARD CONSTRUCTION SPECIFICATIONS. REFER TO GEOTECHNICAL REPORT.
4. SEE CIVIL DRAWINGS FOR ALL EXTERIOR SLABS AND CURBS AND LIMITS OF EXCAVATION.
5. DURING THE PLACEMENT AND FINISHING OF SLAB, USE FOGGING OR MISTING EQUIPMENT TO APPLY MOISTURE TO THE SLAB AREAS UNTIL FINAL CURING HAS BEGUN TO AVOID EXCESSIVELY RAPID EVAPORATION OF WATER FROM THE SLAB. DO NOT USE SPRAY WATER BOTTLES THAT APPLY LARGE AMOUNTS OF WATER THE SLAB SURFACE
6. FOR ALL REINFORCED CONCRETE FOUNDATION MEMBERS, CONTRACTOR SHALL FOLLOW ALL THE APPLICABLE ITEMS ON THE "REINFORCED CONCRETE NOTES:".
7. PROTECT PIPES AND CONDUITS RUNNING THROUGH WALLS AND SLABS WITH 1/2" EXPANSION MATERIAL.
8. DO NOT PLACE FOOTINGS OR SLABS AGAINST SUBGRADE CONTAINING FREE WATER.
9. MAINTAIN PROPER SITE DRAINAGE DURING CONSTRUCTION TO ENSURE SURFACE RUNOFF AWAY FROM STRUCTURES AND TO PREVENT PONDING OF SURFACE RUNOFF NEAR THE STRUCTURES.
10. KEEP OPEN EXCAVATIONS AROUND BUILDING DRY, BACKFILL AGAINST FOUNDATIONS AND GRADE BEAMS AS SOON AS PRACTICAL. PUMP WATER OUT OF OPEN EXCAVATIONS OF FLOODING PRIOR TO BACKFILLING.

REINFORCED CONCRETE NOTES

1. DETAILING OF CONCRETE REINFORCEMENT AND ACCESSORIES SHALL BE IN ACCORDANCE WITH ACI PUBLICATION 315, LATEST EDITION.
2. CONCRETE REINFORCING SHALL CONFORM TO THE REQUIREMENTS OF ASTM A-615, GRADE 60. WELDED WIRE FABRIC SHALL BE IN ACCORDANCE WITH ASTM A-185.
3. CONCRETE IN ALL AREAS SHALL HAVE SAND AND GRAVEL AGGREGATE CEMENT CONFORMING TO ASTM C 150, TYPE I, AND DESIGNATED COMPRESSIVE STRENGTH (f'c) AT 28 DAYS AS CALLED OUT IN NOTE #4 BELOW. ALSO SEE PROJECT SPECIFICATIONS FOR DIFFERENT AGGREGATE AND COMPRESSIVE STRENGTH REQUIREMENTS.
4. UNLESS NOTED OTHERWISE, CONCRETE SHALL MEET OR EXCEED THE MINIMUM COMPRESSIVE STRENGTH REQUIREMENTS AT 28 DAYS:
   A. CONCRETE DESIGN STRENGTH:
      a. GRADE BEAMS & SLABS ON GRADE: f'c = 4,000 PSI
      b. PIER CAPS, WALLS, STAIRS & ANY OTHER NOT NOTED: f'c = 4,000 PSI
      c. PIERS: f'c = 4,000 PSI
   B. CONCRETE COVER REINFORCEMENT COVER SHALL MEET THE FOLLOWING REQUIREMENTS (UNLESS SPECIFICALLY OTHERWISE IN PLANS):
      a. SLAB ON GRADE 1" TOP
      b. GRADE BEAMS 1 1/2" TOP, 3" BOTTOM, 2" SIDES
      c. DRILLED PIERS 3" ALL SURFACES
      d. COLUMNS 1 1/2" ALL SURFACES

   (SEE SECTION 20.6 ACI 318-19 FOR CONDITIONS NOT NOTED.
5. FLY ASH MAY BE USED TO REPLACE A PORTION OF THE PORTLAND CEMENT, THE RATIO OF FLY ASH TO THE TOTAL OF THE FLY ASH AND CEMENT IN A MIX SHALL NOT EXCEED 20%. FLY ASH SHALL CONFORM TO ASTM C618, TYPE C OR F.
6. IT SHALL BE THE RESPONSIBILITY OF THE CONTRACTOR TO COORDINATE WITH THE CONCRETE SUPPLIER TO ENSURE A PUMPABLE AND WORKABLE MIX. TESTING LAB WILL CONTROL SLUMP AND ONLY TESTING LAB CAN ADD WATER ON JOB SITE. CONCRETE SUPPLIER WILL INFORM TESTING LAB/CONTRACTOR OF MAXIMUM WATER ALLOWABLE THAT CAN BE ADDED ON JOB SITE BEFORE W/C RATIO IS EXCEEDED. THE USE OF PLASTICIZERS, RETARDANTS AND OTHER ADDITIVES SHALL BE AT THE OPTION OF THE CONTRACTOR SUBJECT TO THE APPROVAL OF THE STRUCTURAL ENGINEER. FOLLOW THE RECOMMENDATIONS OF THE MANUFACTURER FOR THE PROPER USE OF ADDITIVES. THE USE OF CALCIUM CHLORIDE OR OTHER CHLORIDE BEARING SALTS SHALL NOT BE PERMITTED.
7. CONCRETE SLUMP TESTS SHALL BE MADE BEFORE AND AFTER THE ADDITION OF ADMIXTURES AND MAY BE TAKEN AT THE BACK OF THE TRUCK. CONCRETE FOR THE PREPARATION OF TEST CYLINDERS SHALL BE TAKEN FROM THE HOSE END FOR CONCRETE PLACED BY PUMP.
8. ALL REINFORCING STEEL SHALL BE LAPPED PER THE LATEST EDITION OF THE ACI-318-19. SPLICES. CORNERS AND INTERSECTIONS WITH STANDARD 90 DEGREE BEND OR CORNER BARS. LAP TOP BARS AT CENTER OF SPAN. LAP WELDED WIRE MESH ONE FULL MESH AT SIDE AND END LAPS. DO NOT LAP OR WELD REINFORCEMENT IN THE FIELD UNLESS SPECIFICALLY SHOWN ON STRUCTURAL DRAWINGS OR APPROVED BY E.O.R. WHEN SPECIFICALLY APPROVED, PROVIDE WELDED REINFORCEMENT IN ACCORDANCE WITH ASTM A706, USE LOW HYDROGEN ELECTRODES FOR WELDING OF REINFORCEMENT IN CONFORMANCE WITH "WELDING STEEL, METAL INSERTS AND CONNECTIONS IN REINFORCED CONCRETE CONSTRUCTION" AMERICAN WELDING SOCIETY AWS D1.4 WHERE REQUIRED, PROVIDE DOWELS TO MATCH SIZE AND SPACING OF MAIN REINFORCING.
9. REFER TO ARCHITECTURAL, MECHANICAL, ELECTRICAL AND PLUMBING DRAWINGS FOR ANY OTHER ADDITIONAL SLEEVES, ANCHORS, VENT OPENINGS, ETC., NOT SHOWN ON STRUCTURAL PLANS THAT MIGHT BE REQUIRED.
10. PLACE CONCRETE IN A MANNER SO AS TO PREVENT SEGREGATION OF THE MIX. DELAY FLOATING AND TROWELLING OPERATIONS UNTIL CONCRETE HAS LOST SURFACE WATER SHEEN OR ALL FREE WATER. DO NOT SPRINKLE FREE CEMENT ON THE SLAB SURFACE. FINISHING OF SLAB SURFACES SHALL COMPLY WITH THE RECOMMENDATIONS OF AC1 302.1 AND 304.
11. UNLESS NOTED OTHERWISE ON PLAN, CONTROL JOINTS IN SLAB ON GRADE TO BE LOCATED APPROXIMATELY 225 SQ. FT. GRIDS. ACTUAL LOCATION TO BE DETERMINED BY OWNER OR CONTRACTOR.
12. PROVIDE 7 DAY CURING OF SLAB IMMEDIATELY AFTER FINISHING, USING ONE OF THE FOLLOWING METHODS
   A. CONTINUOUSLY WATERED BURLAP
   B. WATERPROOF MEMBRANES
13. PROTECT THE CONCRETE SURFACE BETWEEN FINISHING OPERATIONS ON HOT, DRY WINDY DAYS OR ANY OTHER TIME THAT PLASTIC SHRINKAGE CRACKS COULD DEVELOP BY USING WET BURLAP, PLASTIC MEMBRANE OR FOGGING. PROTECT CONCRETE SLAB AT ALL TIMES FROM RAIN, HAIL OR OTHER INJURIOUS EFFECTS.
14. UNLESS SPECIFIED CONCRETE MUST REACH THE FOLLOWING PERCENTAGES OF ITS 28-DAY COMPRESSIVE STRENGTH (F'c), BEFORE FORMS MAY BE REMOVED. 40% WALLS, COLUMNS & BEAM SIDES, 70% JOISTS, PANS & BEAM BOTTOMS (IF RESHORED), 85% SHORING FOR FLOOR SYSTEMS (IF NOT SHORED)
15. AN INDEPENDENT CERTIFIED TESTING LABORATORY SHALL VERIFY AND PROVIDE REPORTS CERTIFYING THE FOLLOWING:
   A. CONCRETE PLANT BATCH TICKETS FOR EACH TRUCK TO VERIFY THAT THE CONCRETE MATCHES THE APPROVED DESIGN MIX.
   B. CONCRETE SLUMP IS IN ACCORDANCE WITH APPROVED DESIGN MIX.
   C. CONCRETE PLACEMENT PREPARATIONS ARE IN ACCORDANCE WITH ACI SPECIFICATIONS.
   D. CONTROL / CONTRACTION JOINTS ARE INSTALLED WITHIN THE ACI TIME ALLOWANCE.
   E. PROPER CURING METHODS ARE BEING UTILIZED.
16. NO CONCRETE SHALL BE PLACED OUTSIDE OF THESE SPECIFICATIONS WITHOUT THE ENGINEER'S APPROVAL. ANY ITEMS NOT IN COMPLIANCE WITH THE OUTLINED SPECIFICATION SHALL BE REPORTED TO THE ARCHITECT AND STRUCTURAL ENGINEER WITHIN 24 HOURS.
17. REFER TO ARCHITECTURAL DRAWINGS FOR WATER PROOFING REQUIREMENTS.
18. UNLESS OTHERWISE NOTED ALL VERTICAL REINFORCEMENT ON COLUMNS SHALL BE SPLICED A MINIMUM OF 36 BAR DIAMETERS.
19. THE SHORES FOR THE FLOOR SLAB & BEAMS SHALL BE ADEQUATE TO CARRY THE TOTAL WEIGHT OF THE SLAB SYSTEM TO THE GROUND, ALL SHORING / RESHORING DESIGN SHALL BE THE RESPONSIBILITY OF THE CONTRACTOR.
20. THERE SHALL BE NO HORIZONTAL CONSTRUCTION JOINTS IN CONCRETE POURS. ALL CONSTRUCTION JOINTS SHALL BE MADE IN THE MIDDLE OF THE SPAN. WHEN A BEAM INTERSECTS A GIRDER AT MIDDLE 1/3 OF SPAN, THE JOINTS SHALL BE OFFSET DISTANCE EQUAL TO TWICE THE WIDTH OF THE BEAM. THE LOCATION OF CONSTRUCTION JOINTS SHALL BE APPROVED BY THE STRUCTURAL ENGINEER. ADDITIONAL REINFORCING AT CONSTRUCTION JOINTS SHALL BE SPECIFIED BY THE BEGINNER, SEE TYPICAL DETAIL. PROVIDE 75 FEET MAXIMUM SPACING OF CONSTRUCTION JOINTS IN GRADE BEAMS.
21. THE MAXIMUM WATER TO CEMENT RATIO: 0.50 (MAX) FOR NON-AIR ENTRAINED. AND 0.48 (MAX) FOR AIR ENTRAINED.
22. MAX. AGGREGATE SIZE 3/4 INCH.
23. PROVIDE BAR SUPPORT ACCESSORIES IN ACCORDANCE WITH THE LATEST ACI MANUAL, STANDARD PRACTICE FOR DETAILING REINFORCED CONCRETE STRUCTURES, SUPPORT BEAM REINFORCING ON BEAMS BOLSTERS SPACED NOT MORE THAN 4 FEET ON CENTER.
24. PROVIDE BAR SUPPORTS WITH PLASTIC COATED LEGS OR HOT DIP GALVANIZING AFTER FABRICATION FOR CONCRETE EXPOSED TO VIEW. PROVIDE STAINLESS STEEL BAR SUPPORTS FOR CONCRETE TO RECEIVE A SAND BLAST FINISH.
25. FOR PIPE INSTALLED HORIZONTALLY WITHIN THE SLAB, PROVIDE MAXIMUMS OUTSIDE DIAMETER OF 30% OF SLAB THICKNESS. PLACE CONDUIT OR PIPE BETWEEN THE TOP AND BOTTOM LAYER OF REINFORCEMENT WITH THE CENTER THIRD OF SLAB, DO NOT SPACE CONDUITS OF PIPES CLOSER THAN THREE DIAMETERS OF WIDTHS ON CENTER.
26. CONTRACTOR AND SUPPLIER TO COORDINATE ADDITIONAL ADMIXTURES AND SUBMIT MIX DESIGNS AS REQUIRED FOR MASS CONCRETE. AFTER COMPLETION OF THE EQUIPMENT FOUNDATION, THE CONCRETE SHALL BE INSPECTED AND ALL CRACKS FROM SHRINKAGE AND CONSTRUCTION STRESS SHALL BE REPAIRED.

REINFORCED CONCRETE NOTES CONTINUED

TENSION DEVELOPMENT LENGTH ('ld')

BAR SIZE	f'c= 3000 PSI		f'c= 4000 PSI		f'c= 5000 PSI		f'c= 6000 PSI		f'c= 7000 PSI		f'c= 8000 PSI		f'c= 10000 PSI	
	ld TOP	ld BOT	ld TOP	ld BOT	ld TOP	ld BOT	ld TOP	ld BOT	ld TOP	ld BOT	ld TOP	ld BOT	ld TOP	ld BOT
#3	1'-9"	1'-4"	1'-6"	1'-2"	1'-5"	1'-1"	1'-3"	1'-0"	1'-2"	1'-0"	1'-1"	1'-0"	1'-0"	1'-0"
#4	2'-4"	1'-10"	2'-1"	1'-7"	1'-10"	1'5"	1'-8"	1'-3"	1'-7"	1'-2"	1'-5"	1'-1"	1'-4"	1'-0"
#5	3'-0"	2'-3"	2'-7"	2'-0"	2'-4"	1'9"	2'-1"	1'-7"	2'-0"	1'-6"	1'-10"	1'-5"	1'-8"	1'-3"
#6	3'-7"	2'-9"	3'-11"	2'-4"	2'-9"	2'-1"	2'-6"	1'-11"	2'-4"	1'-10"	2'-2"	1'-8"	1'-11"	1'-6"
#7	5'-2"	4'-0"	4'-5"	3'-6"	4'-0"	3'-1"	3'-8"	2'-10"	3'-5"	2'-8"	3'-2"	2'-5"	2'-10"	2'-2"
#8	5'-11"	4'-7"	5'-2"	3'-11"	4'-7"	3'-6"	4'-2"	3'-3"	4'-0"	3'-1"	3'-8"	2'-10"	3'-3"	2'-6"
#9	6'-8"	5'-2"	5'-9"	4'-5"	5'-2"	4'-0"	4'-9"	3'-8"	4'-5"	3'-5"	4'-1"	3'-2"	3'-8"	2'-10"
#10	7'-6"	5'-10"	6'-6"	5'-0"	5'-10"	4'-6"	5'-4"	4'-1"	5'-0"	3'-10"	4-7"	3'-7"	4'-2"	3'-2"
#11	8'-4"	6'-5"	7'-3"	5'-7"	6'-6"	5'-0"	5'-11"	4'-7"	5'-6"	4'-3"	5'-1"	3'-11"	4'-5"	3'-6"

NOTES:
1. TABULATED VALUES ARE APPLICABLE ONLY IF CLEAR SPACING OF BARS BEING DEVELOPED OR SPLICED IS NOT LESS THAN 'db', CLEAR COVER IS NOT LESS THAN 'db' AND STIRRUPS OR TIES THROUGHOUT 'ld' IS NOT LESS THAN CODE MINIMUM, OR CLEAR SPACING OF BARS BEING DEVELOPED OR SPLICED IS NOT LESS THAN 2" 'db' AND CLEAR COVER IS NOT LESS THAN 'db'. FOR OTHER CASES , MULTIPLY TABULATED VALUES BY 1.5.
2. 'TOP' BARS ARE HORIZONTAL REBARS WITH MORE THAN 12 IN OF FRESH CONCRETE CAST BELOW THE BARS AT THE DEVELOPMENT LENGTH.
3. FOR LIGHT WEIGHT CONCRETE MULTIPLY THE TABULATED VALUES BY 1.3.
4. FOR EPOXY COATED BARS, MULTIPLY THE TABULATED VALUES BY 1.5 FOR 'BOT' BARS, OR BY 1.3. FOR TOP BARS.
5. FOR REINFORCEMENT OTHER THAN GRADE 60, MODIFY THE TABULATED VALUES BY THE RATIO OF THE REINFORCEMENT YIELD STRENGTH DIVIDED BY 60 KSI.

TENSION LAP SPLICES-CLASS B- TOP & BOT BARS

BAR SIZE	f'c= 3000 PSI		f'c= 4000 PSI		f'c= 5000 PSI		f'c= 6000 PSI		f'c= 7000 PSI		f'c= 8000 PSI		f'c= 10000 PSI	
	TOP	BOT	TOP	BOT	TOP	BOT	TOP	BOT	TOP	BOT	TOP	BOT	TOP	BOT
#3	2'-4"	1'-9"	2'-0"	1'-6"	1'-10"	1'-5"	1'-8"	1'-4"	1'-7"	1'-4"	1'-5"	1'-4"	1'-3"	1'-0"
#4	3'-1"	2'-4"	2'-8"	2'-1"	2'-5"	1'-10"	2'-2"	1"-8"	2'-1"	1'-7"	1'-11"	1'-5"	1'-8"	1'-7"
#5	3'-10"	3'-0"	3'-4"	2'-7"	3'-0"	2'-4"	2'-9"	2'-1"	2'-7"	2'-0"	2'-4"	1'-10"	2'-1"	1'-8"
#6	4'-8"	3'-7"	4'-0"	3'-1"	3'-7"	2'-9"	3'-3"	2'-8"	2'-11"	2'-4"	2'-10"	2'-2"	2'-6"	1'-11"
#7	6'-9"	5'-2"	5'-10"	4'-6"	5'-3"	4'-0"	4'-9"	3'-8"	4'-6"	3'-5"	4'-2"	3'-2"	3'-8"	2'-10"
#8	7'-9"	5'-11"	6'-8"	5'-2"	6'-0"	4'-7"	5'-5"	4'-2"	5'-1"	3'-11"	4'-9"	3'-8"	4'-3"	3'-3"
#9	8'-8"	6'-8"	7'-6"	5'-2"	6'-9"	5'-2"	6'-2"	4'-9"	5'-9"	4'-5"	5'-4"	4'-1"	4'-9"	3'-8"
#10	9'-10"	7'-6"	8'-6"	5'-9"	7'-7"	5'-10"	6'-11"	5'-4"	6'-6"	5'-0"	6'-0"	4'-7"	5'-4"	4'-2"
#11	10'-11"	8'-4"	9'-5"	7'-3"	8'-5"	6'-6"	7'-8"	5'-11"	7'-2"	5'-6"	6'-8"	5'-1"	5'-11"	4'-5"

NOTES:
1. TABULATED VALUES ARE APPLICABLE ONLY IF CLEAR SPACING OF BARS BEING DEVELOPED OR SPLICED IS NOT LESS THAN 'db', CLEAR COVER IS NOT LESS THAN 'db' AND STIRRUPS OR TIES THROUGHOUT 'ld' IS NOT LESS THAN CODE MINIMUM, OR CLEAR SPACING OF BARS BEING DEVELOPED OR SPLICED IS NOT LESS THAN 2" 'db' AND CLEAR COVER IS NOT LESS THAN 'db'. FOR OTHER CASES , MULTIPLY TABULATED VALUES BY 1.5.
2. 'TOP' BARS ARE HORIZONTAL REBARS WITH MORE THAN 12 IN OF FRESH CONCRETE CAST BELOW THE BARS AT THE DEVELOPMENT LENGTH.
3. FOR LIGHT WEIGHT CONCRETE MULTIPLY THE TABULATED VALUES BY 1.3.
4. FOR EPOXY COATED BARS, MULTIPLY THE TABULATED VALUES BY 1.5 FOR 'BOT' BARS, OR BY 1.3. FOR TOP BARS.
5. FOR REINFORCEMENT OTHER THAN GRADE 60, MODIFY THE TABULATED VALUES BY THE RATIO OF THE REINFORCEMENT YIELD STRENGTH DIVIDED BY 60 KSI.
6. FOR CLASS 'A' SPLICE USE SAME AS TENSION DEVELOPMENT LENGTH.

"Ldh" TENSION DEPELOPMENT (EMBEDMENT) LENGTH FOR STANDARD END HOOKS (GRADE 60 BARS - NORMAL WEIGHT CONCRETE - GENERAL USE)

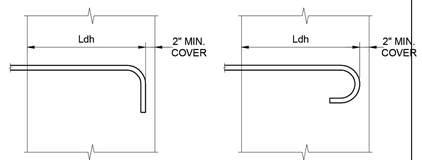

STANDARD 90 HOOK SIDE COVER > 21/2" — STANDARD 180 HOOK SIDE COVER > 21/2"

BAR SIZE	fc=3000 psi	fc=4000 psi	fc=5000 psi	fc=6000 psi
	Ldh	Ldh	Ldh	Ldh
# 3	9"	7"	7"	6"
# 4	11"	10"	9"	8"
# 5	1'-2"	1'-0"	11"	10"
# 5	1'-5"	1'-3"	1'-1"	1'-0"
# 6	1'-7"	1'-5"	1'-3"	1'-2"
# 7	1'-10"	1'-7"	1'-5"	1'-4"
# 8	2'-1"	1'-10"	1'-7"	1'-6"
# 9	2'-4"	2'-0"	1'-10"	1'-8"
# 10	2'-8"	2'-2"	2'-0"	1'-10"

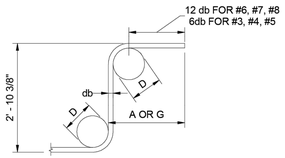

90 DEG HOOK

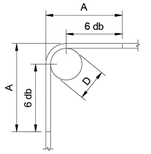

CORNER TIE HOOK

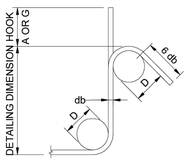

135 DEG HOOK

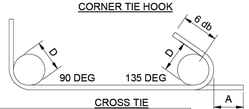

CROSS TIE

STIRRUP & TIE HOOK TYPES

BAR SIZE	D (IN.)	90 DEG HOOK A OR G (IN.)	135 DEG HOOK A OR G (IN.)
#3	1 1/2	4	4
#4	2	4 1/2	4 1/2
#5	2 1/2	6	5 1/2

DWG. NO.	MKT-S-02

IDS Engineering Group
13430 NW. Freeway, Suite 700
Houston, Tx. 77040
713.462.3178
TxEng Firm 2726 / TxSurv Firm 10110700

CONCEPT ENGINEERS
TX. FIRM REGISTRATION # F-04417
Structures for the whole community

PRELIMINARY
NOT FOR CONSTRUCTION, BIDDING, OR PERMIT PURPOSES.
FOR REVIEW ONLY.
DAVID MOORE
TEXAS LICENSE NO. 139405
Date: 05/08/26

CITY OF HOUSTON
DEPARTMENT OF PUBLIC WORKS AND ENGINEERING

LIFT STATION RENEWAL AND REPLACEMENT FY 2023
MARKET ST. NO.2
LIFT STATION GENERAL NOTES (SHEET 1 OF 3)

WBS NUMBER	R-000267-0179-4
DRAWING SCALE	AS NOTED
	CITY OF HOUSTON PM
	NAWARAJ PANTA, P.E.
SHEET NO.	188 OF 361

FOR CITY OF HOUSTON USE ONLY

NO.	DATE	REVISION	APP.

FILE PATH: G:\COMMERCIAL PROJECTS\24137 - Lift Station Rehab & Construction\STRUCTURAL\JV_DWGS\XREF\24137-TBlock.dwg

IDS JOB No. 0057-085-00

PLOTTED: 5/21/2019 1:28 PM

STRUCTURAL STEEL NOTES

1. ALL STRUCTURAL STEEL MEMBERS SHALL CONFORM TO THE FOLLOWING DESIGNATION

W SHAPES	ASTM A992	(50KSI)
SQUARE RECTANGULAR TUBES	ASTM A500 GR. C	(50 KSI)
ROUND TUBES (HSS)	ASTM A500 GR. C	(46 KSI)
STEEL PIPES	ASTM A53 GR. B	(35 KSI)
CHANNELS	ASTM A36	(36 KSI)
PLATES, ANGLES, MISC, STEEL	ASTM A36	(36 KSI)
ANCHOR RODS	ASTM F1554 GR.36	(36 KSI)
HARDENED STEEL WASHERS	ASTM F436	
HEAVY HEX NUTS	ASTM A563	
SEE NOTE 16		

2. ALL STRUCTURAL STEEL SHALL BE DETAILED FABRICATED AND ERECTED IN ACCORDANCE WITH A.I.S.C. STANDARDS 15th EDITION.

3. FOR ALL HIGH STRENGTH BOLTS, HARDENED WASHERS SHALL BE PROVIDED ON NUT SIDE OF BOLT FOR TORQUING AS REQUIRED.

4. ALL WELDING SHALL CONFORM TO STANDARD OF THE AMERICAN WELDING SOCIETY, AWS D1.1 LATEST EDITION STRUCTURAL WELDING CODE

5. E70 ELECTRODES FOR ALL FIELD AND SHOP WELDING SHALL CONFORM TO ANSI/AWS D1.1 LATEST EDITION UNLESS NOTED OTHERWISE ALL WELD SIZES SHALL BE PER AISC CODE. REFER TO NOTE 17 FOR ADDITIONAL INFORMATION.

6. SPLICING STRUCTURAL MEMBERS IS PROHIBITED WITHOUT PRIOR APPROVAL OF THE STRUCTURAL ENGINEER.

7. ANY TEMPORARY SHORING OR BRACING DURING THE CONSTRUCTION PHASE BEFORE COMPLETION OF CONNECTIONS IS THE RESPONSIBILITY OF THE CONTRACTOR.

8. IF NOT SHOWN ON THE DRAWINGS, SUPPORT OF METAL DECK AROUND COLUMN CLOSURE, SCREED PLATES AROUND THE OPENINGS AND EDGE OF SLAB SHALL BE PROVIDED BY THE CONTRACTOR.

9. ALL FIELD CONNECTIONS TO BOLTED WITH A325 BOLTS. BOLTS TO BE LEJEUNE TYPE OR EQUAL. PROVIDE MINIMUM OF TWO BOLTS PER CONNECTION, MINIMUM BOLT DIAMETER 3/4".

10. ALL EXPOSED STEEL SHALL BE HOT DIPPED GALVANIZED.

11. THE BEAM-TO-BEAM AND BEAM-TO-COLUMN SIMPLE SHEAR CONNECTIONS SHOULD DEVELOP THE END REACTION OF THE CONNECTED BEAM. THE END REACTION OF THE CONNECTED BEAM CAN BE OBTAINED FROM THE LOAD CARRYING CAPACITY OF THE BEAM ON THE BASIS OF EQUIVALENT UNIFORM LOADS GIVEN IN THE PART 3 OF AISC MANUAL LATEST EDITIONS (UNLESS LARGER REACTION IS SHOWN ON DRAWINGS), THE MINIMUM SHEARING CAPACITY OF 15 KIPS SHALL BE PROVIDED FOR ALL BEAMS. REFER TO NOTE 22 FOR COMPOSITE BEAM CONNECTION REQUIREMENTS.

12. THE DESIGN OF STRUCTURAL STEEL CONNECTIONS IS THE RESPONSIBILITY OF THE CONTRACTOR AND THE STEEL FABRICATOR. THE DESIGN OF STEEL CONNECTIONS SHALL BE PERFORMED BY A REGISTERED PROFESSIONAL ENGINEER, AND SHALL BE SUBMITTED TO THE ENGINEER OF RECORD FOR REVIEW.

13. STEEL BEAM BEARING ON MASONRY SHALL HAVE A MINIMUM OF 8" BEARING AND ANCHOR AS SHOWN ON THE DRAWINGS, MASONRY SHALL ALSO HAVE SOLID MASONRY OR FULLY GROUTED CELLS FROM STEEL BEARING TO GRADE BEAM BELOW.

14. UNLESS OTHERWISE NOTED, ALL MOMENT CONNECTIONS SHALL BE MADE WITH FULL PENETRATION WELD AND SHALL BE DESIGNED TO DEVELOP FULL CAPACITY OF THE MEMBER.

15. ANY MISCELLANEOUS STEEL NOT SHOWN ON THE PLANS, BUT REQUIRED DUE TO COORDINATION BETWEEN DIFFERENT DISCIPLINES SHALL BE INCLUDED BY THE CONTRACTOR IN THEIR BID.

16. CONNECTION MATERIALS
    a. BEAM, COLUMNS, STIFFENER PLATES AND DOUBLE PLATES TO MATCH GRADE STEEL OF STRUCTURAL ELEMENT
    b. ALL CONNECTION MATERIALS, EXCEPT AS OTHERWISE NOTED HEREIN OR IN THE DRAWINGS, INCLUDING BEARING PLATES, GUSSET PLATES, STIFFENER PLATES, ETC. ASTM A36

17. WELD MINIMUM SIZE & STRENGTH
    a. PROVIDE MINIMUM SIZE OF FILLET WELDS AS SPECIFIED IN TABLE J2,4 OF AISC MANUAL
    b. PROVIDE MINIMUM EFFECTIVE THROAT THICKNESS OF PARTIAL PENETRATION GROOVE WELDS AS SPECIFIED ON TABLE J2.3 OF AISC MANUAL
    c. DEVELOP THE FULL TENSILE STRENGTH OF THE MEMBER ELEMENT JOIN ON ALL SHOP AND FIELD WELDS U.N.O.
    d. WHERE CONNECTIONS ARE NOTED ON DRAWINGS AS MOMENT CONNECTIONS PROVIDE WELDS TO DEVELOP FULL FLEXURAL CAPACITY OF THE LESSER MEMBER.

18. PROVIDE BOLTS, NUTS AND WASHERS THAT ARE HOT DIPPED GALVANIZED ACCORDING TO ASTM A153, CLASS C WHEN USED TO CONNECT STEEL ELEMENTS THAT ARE HOT DIP GALVANIZED AFTER FABRICATION.

19. FABRICATE AND ASSEMBLE STRUCTURAL MEMBERS/ASSEMBLIES IN SHOP TO GREATEST EXTEND POSSIBLE.

20. IF CAMBER OF STRUCTURAL MEMBERS IS INDICATED ON THE DRAWINGS WHERE POSSIBLE, CAMBER OF BEAMS TO BE APPLIED BY COLD BEND PROCESS, CAMBER INDICATED IN THE DRAWINGS ARE INTENDED TO BE FINAL CAMBER AT THE TIME OF ERECTION, AND WITHIN TOLERANCE O MINUS ZERO TO PLUS 1/8" FOR EACH TEM FEET OF MEMBER LENGTH. ALL BEAMS SHALL BE INSTALLED SO THAT NATURAL OF SPECIFIC CAMBER IS ORIENTED UPWARDS.

21. CONTRACTOR SHALL BE RESPONSIBLE FOR ALL ERRORS OF DETAILING ON THE SHOP DRAWINGS, ERRORS IN FABRICATION, AND THE CORRECT FITTING OF STRUCTURAL STEEL MEMBERS.

22. FIELD MODIFICATION TO STRUCTURAL STEEL IS PROHIBITED WITHOUT PRIOR APPROVAL BY THE E.O.R.

23. CLEAN STEEL OF RUST, LOSE MILL SCALE AND OTHER FOREIGN MATERIALS WHERE REQUIRED FOR FABRICATION, FITTING UP. OR WELDING.

24. DO NOT CUT STRUCTURAL STEEL MEMBERS FOR THE WORK OF OTHER TRADES WITHOUT PRIOR REVIEW AND APPROVAL OF THE E.O.R.

25. AFTER FABRICATION, HOT DIP GALVANIZE STRUCTURAL STEEL AND THEIR CONNECTIONS PERMANENTLY EXPOSED TO THE OUTSIDE, SUCH ITEMS INCLUDE BUT ARE NOT LIMITED TO:

    1. SHELF ANGLES
    2. PARAPET WALL SUPPORTING MEMBERS
    3. SCREEN WALL SUPPORTING MEMBERS
    4. EMBEDDED PLATES IN CONCRETE
    5. BUILDING CLADDING SUPPORT STEEL.

26. EXAMINE THE ARCHITECTURAL AND STRUCTURAL DRAWINGS FOR OTHER ITEMS THAT REQUIRE HOT DIPPED GALVANIZATION

27. PROVIDE NON-SHRINK NON-METALLIC GROUT FOR BASE PLATES WITH MINIMUM 28 DAYS COMPRESSIVE STRENGTH OF 6000 PSI COMPLETE GROUT WORK BEFORE ROOF CONCENTRATED POURING OF A SINGLE STORY BUILDING.

28. STRUCTURAL STEEL CONNECTIONS NOT COMPLETELY DETAILED ON THE DRAWINGS, INCLUDING MATERIAL GRADE & SIZES, WELD SIZES AND NUMBER OF BOLTS SHALL BE DESIGNED BY THE CONTRACTOR UNDER SUPERVISION OF REGISTERED PROFESSIONAL ENGINEER WHO IS REGISTERED ON THE STATE OF TEXAS AN EMPLOYED BY STEEL FABRICATOR, DESIGN CALCULATIONS TO BE SEALED BY FABRICATOR'S REGISTERED PROFESSIONAL ENGINEER, SHOP DRAWINGS SUBMITTED WITHOUT COMPLETE DESIGN CALCULATIONS WILL NOT BE REVIEWED. WHERE PREDESIGNED CONNECTIONS ARE TAKEN DIRECTLY FROM TABLES IN AISC MANUAL. CALCULATIONS NEED TO BE SUBMITTED PROVIDED JOB DESIGN CONDITIONS PRECISELY MATCH THOSE ASSUMED IN THE AISC MANUAL.

29. FURNISH SHOP DRAWINGS FOR E.O.R.'S REVIEW PRIOR TO FABRICATION. INCLUDE WELDING PROCEDURES, TESTING PROGRAMS FOR WELDING AND HIGH STRENGTH BOLTING, COATING MATERIAL, AND ERECTION SEQUENCE IN SHOP DRAWINGS.

30. MILL STEEL COLUMNS ENDS TO FIT FLUSH WITH BASE PLATE, AND END PLATES, FIELD ASSEMBLY OF THESE STEEL ELEMENTS TO THE COLUMNS IS PROHIBITED.

31. PROVIDE HEADED STUDS (SHEAR AND ANCHOR) MADE OF MATERIAL CONFORMING TO AWS D1.1 CLAUSE 9.2.6.

32. PROVIDE DEFORMED ANCHORS MADE OF MATERIAL CONFORMING TO ASTM A1064.

33. WELD STUDS ACCORDING TO MANUFACTURER'S RECOMMENDATIONS. MANUAL ARC (STICK) WELDING OF HEADED STUDS AND/OR DEFORMED ANCHORS IS NOT ALLOWED.

34. PRIOR TO DECK PLACEMENT, VERIFY THAT STEEL BEAMS BEARING ON MASONRY HAVE 6" MINIMUM BEARING AND ARE ANCHORED S SHOWN ON DRAWINGS.

EXISTING CONSTRUCTION NOTES

1. BEFORE PROCEEDING WITH ANY WORK WITHIN THE EXISTING FACILITY, THE CONTRACTOR SHALL FAMILIARIZE HIMSELF WITH EXISTING STRUCTURAL AND OTHER CONDITIONS. IT SHALL BE THE CONTRACTOR'S RESPONSIBILITY TO PROVIDE ALL NECESSARY BRACING, SHORING, AND OTHER SAFEGUARDS TO MAINTAIN ALL PARTS OF THE EXISTING WORK IN A SAFE CONDITION DURING THE PROCESS OF CONSTRUCTION, AND TO PROTECT FROM DAMAGE THOSE PORTIONS OF THE EXISTING WORK WHICH ARE TO REMAIN.

2. THE CONTRACTOR SHALL FIELD VERIFY THE DIMENSIONS, ELEVATIONS, ETC. NECESSARY FOR THE PROPER CONSTRUCTION AND ALIGNMENT OF THE NEW PORTIONS OF THE WORK TO THE EXISTING WORK. THE CONTRACTOR SHALL MAKE ALL MEASUREMENTS NECESSARY FOR FABRICATION AND ERECTION OF STRUCTURAL MEMBERS. ANY DISCREPANCY SHALL BE IMMEDIATELY BROUGHT TO THE ATTENTION OF THE ENGINEER.

3. WELDING TO AND WITHIN AN EXISTING FACILITY PRESENTS POTENTIAL HAZARDS, INCLUDING:
    A. FIRE HAZARD DUE TO THE EXISTING CONSTRUCTION AND BUILDING CONTENTS.
    B. STRUCTURAL LIQUEFACTION DUE TO WELDING ACROSS THE FULL SECTION OF STRUCTURAL MEMBERS.RECOMMENDATIONS TO PREVENT THESE HAZARDS INCLUDE:
    A. PROTECT EXISTING COMBUSTIBLES PRIOR TO WELDING. KEEP A SEPARATE WATCHMAN AND SEVERAL FIRE EXTINGUISHERS ON HAND
    B. WELD IN SMALL INCREMENTS. ALLOW WELDS TO HARDEN BEFORE CONTINUING TO THE NEXT INCREMENT.
    C. DO NOT LEAVE THE SITE UNTIL SATISFIED THAT NO FIRE HAZARD EXISTS.

4. THE CONTRACTOR SHALL BE RESPONSIBLE FOR THE DESIGN AND ERECTION OF ALL SHORING NECESSARY TO SAFEGUARD THE EXISTING STRUCTURE. THE CONTRACTOR SHALL SUBMIT A DETAILED PLAN FOR SHORING, BRACING, AND PROTECTION OF THE EXISTING CONSTRUCTION.

DEMOLITION NOTES

1. PERFORM DEMOLITION IN A CAREFUL AND CONTROLLED MANNER TO PREVENT DAMAGE TO EXISTING STRUCTURES , UTILITES AND IMPROVEMENTS TO REMAIN.

2. CONTRACTOR SHALL BE SOLEY RESPONSIBLE FOR ALL MEANS, METHODS, SEQUENCES . PROCEDURES, AND SAFETY PRECAUTIONS ASSOCIATED WITH DEMOLITION. ENGINEER'S DRAWINGS INDICATE LIMITS OF DEMOLITION ONLY AND DO NOT PRESCRIBE HOW DEMOLITION IS TO BE PERFORMED.

3. VERIFY FIELD CONDITIONS PRIOR TO STARTING WORK. PROVIDE ALL NECESSARY BRACING, SHORING, AND TEMPORARY SUPPORTS TO PREVENT MOVEMENT OR DAMAGE TO ADJACENT OR REMAINING STRUCTURES.

4. IMMEDIATELY CEASE OPERATIONS AND NOTIFY OWNER AND ENGINEER IF MOVEMENT, SETTLEMENT, OR UNSAFE CONDITIONS ARE OBSERVED DO NOT RESUME WORK UNTIL SAFETY HAS BEEN RESTORED.

5. REMOVE ONLY PORTIONS OF CONSTRUCTION INDICATED ON THE DRAWINGS. WHERE LIMITS ARE UNCLEAR, CONFIRM EXTENT OF REMOVAL WITH ENGINEER PRIOR TO PROCEEDING.

6. PERFORM ALL WORK IN ACCORDANCE WITH LOCAL, STATE AND FEDERAL REGULATIONS INCLUDING OSHA REQUIREMENTS. MAINTAIN SAFE ACCESS AND CONTROL DUST, DEBRIS, AND NOISE AT ALL TIMES.

7. REPAIR OR REPLACE, AT NO COST TO THE OWNER, ANY DAMAGE RESULTING FROM DEMOLITION OPERATIONS OR DEMOLITION PERFORMED BEYOND THE LIMITS INDICATED.

8. ENGINEER'S RESPONSIBILITY IS LIMITED TO DEFINING THE EXTENT OF DEMOLITION. CONTRACTOR SHALL BE FULLY RESPONSIBLE FOR MEANS, METHODS SAFETY AND PRTECTION OF EXISTING STRUCTURES AND FACILITIES.

STRUCTURAL ABBREVIATIONS

AB	ANCHOR BOLT	FLR	FLOOR	PERP	PERPENDICULAR
ALT	ALTERNATIVE	FOM	FACE OF MASONRY	PL	PLATE
ALUM	ALUMINUM	FS	FAR SIDE	PLUMB	PLUMBING
ARCH	ARCHITECTURAL	FT	FOOT	PNL	PANEL
B	BOTTOM	FTG	FOOTING	POLY	POLYETHYLENE
B/	BOTTOM OF	FUT	FUTURE	PREFAB	PREFABRICATED
BLDG	BUILDING	GA	GAGE	PSF	POUNS PER SQUARE FOOT
BM	BEAM	GALV	GALVANIZED	PSI	POUNS PER SQUARE INCH
B/BOT	BOTTOM	GYP	GYPSUM	QTY	QUANTITY
BRG	BEARING	HORIZ	HORIZONTAL	R	RADIUS
C	CHANNEL SHAPE	HP	HIGH POINT	RE	CALLED RIGHT END
C TO C	CENTER TO CENTER	HSS	HOLLOW STRUCTURAL SECTION	RE:	REFERENCE
CANT	CANTILIVER	HT	HEIGHT	REINF	REINFORCE (MENT) (D)
CJ	CONTROL JOINT	IN	INCH	REQ	REQUIRE
CONST JT	CONSTRUCTION JOINT	INFO	INFORMATION	REQD	REQUIRED
CL	CENTER LINE	INT	INTERIOR	REV	REVISION
CLR	CLEAR	INSUL	INSULATION	SCHED	SCHEDULE
CMU	CONCRETE MASONRY UNIT	JB	JOIST BOTTOM / SEAT ELEVATION	SF	SQUARE FOOT
COL	COLUMN	JST	JOIST	SHT	SHEET
CONC	CONCRETE	JT	JOINT	SI	SQUARE INCH
CONN	CONNECTION	K	KIPS	SIM	SIMILAR
CONST	CONSTRUCTION	KO	KNOCK OUT	SL	SLOPE
CONT	CONTINUOUS	KSF	KIPS PER SQUARE FOOT	SOG	SLAB ON GRADE
COORD	COORDINATE	KSI	KIPS PER SQUARE INCH	SPA	SPACES (D)
CTR	CENTER	L	ANGLE	SPEC	SPECIFICATION
CTRD	CENTERED	LB	POUND	STD	STANDARD
D	DEPTH	LE	LEFT END	STIFF	STIFFENER
DBA	DEFORMED ANCHOR BAR	LG	LONG	STL	STEEL
DBL	DOUBLE	LLH	LONG LEG HORIZONTAL	SW	SHORTWAY
DBL TEE	PRECAST DOUBLE TEE	LLV	LONG LEG VERTICAL	SYM	SYMETRICAL
DIA	DIAMETER	LSH	LONG SIDE HORIZONTAL	T	TOP
DIAG	DIAGONAL	LSV	LONG SIDE VERTICAL	T/	TOP OF
DIM	DIMENSION	LP	LOW POINT	T&B	TOP AND BOTTOM
DN	DOWN	LW	LONG WAY	THK	THICK
DTL	DETAIL	M	MIDDLE	TOF	TOP OF FOOTING
DWG	DRAWING	MANUF/MFR	MANUFACTER	TOJ	TOP OF JOIST
DWL	DOWEL	MATL	MATERIAL	TOS	TOP OF STEEL
EA	EACH	MAX	MAXIMUM	TRANSV	TRANSVERSE
EE	EACH END	MECH	MECHANICAL	TYP.	TYPICAL
EF	EACH FACE	MEP	MECHANICAL/ELECTRICAL/ PLUMBING	UON	UNLESS OTHERWISE NOTED
EJ	EXPANSION JOINT			VERT	VERTICAL
EL/ELEV	ELEVATION	MEZZ	MEZZANINE	WF	WIDE FLANGE SHAPE
EOR	ENGINEER OF RECORD	MIN	MINIMUM	W/	WITH
EOS	EDGE OF SLAB	MISC	MISCELLANEOUS	W/O	WITHOUT
EQ	EQUAL	MO	MASONRY OPENING	WP	WORK POINT
EQUIP	EQUIPMENT	MSL	MEAN SEA LEVEL	WS	WATERSTOP
ES	EACH SIDE	MTL	METAL	WT	T SHAPE
EW	EACH WAY	NO	NUMBER	WWF	WELDED WIRE FABRIC
EXIST	EXISTING	NS	NEAR SIDE	&	AND
EXP	EXPANSION	N.T.S.	NOT TO SCALE	@	AT
EXT	EXTERIOR	OC	ON CENTER	Ø	DIAMETER
FD	FLOOR DRAIN	OC EW	ON CENTER EACH WAY	#	NUMBER
FDN	FOUNDATION	OPNG	OPENING	±	PLUS/MINUS
FL	FULL LENGTH	OPP	OPPOSITE		
FF	FINISH FLR	PEMB	PREENGINEERED METAL BUILDING		

NO.	DATE	REVISION	APP.

IDS Engineering Group
13430 NW. Freeway, Suite 700
Houston, Tx. 77040
713.462.3178
TxEng Firm 2726 / TxSurv Firm 10110700

CONCEPT ENGINEERS
TX. FIRM REGISTRATION # F-04417
Structures for the whole community

PRELIMINARY
NOT FOR CONSTRUCTION,
BIDDING, OR PERMIT PURPOSES.
FOR REVIEW ONLY.
DAVID MOORE
TEXAS LICENSE NO. 139405
Date: 05/08/26

CITY OF HOUSTON
DEPARTMENT OF PUBLIC WORKS AND ENGINEERING

LIFT STATION RENEWAL AND REPLACEMENT FY 2023
MARKET ST. NO.2
LIFT STATION GENERAL NOTES (SHEET 2 OF 3)

WBS NUMBER	FOR CITY OF HOUSTON USE ONLY
R-000267-0179-4	
DRAWING SCALE	
AS NOTED	
CITY OF HOUSTON PM	
NAWARAJ PANTA, P.E.	
DWG. NO. MKT-S-03	SHEET NO. 189 OF 361

IDS JOB No. 0057-085-00

FILE PATH: G:\COMMERCIAL PROJECTS\24137 - Lift Station Rehab & Construction\STRUCTURAL\JV_DWGS\XREF\24137-TBlock.dwg

SPECIAL INSPECTIONS NOTES

THE FOLLOWING STATEMENT AND SCHEDULES OF INSPECTIONS OUTLINE THE SPECIAL INSPECTIONS AND TESTS NECESSARY FOR THIS PROJECT.
THE GENERAL CONTRACTOR SHALL HIRE AN "APPROVED AGENCY" PER THE INTERNATIONAL BUILDING CODE (IBC) SECTION 1703 TO PROVIDE SPECIAL INSPECTIONS FOR THIS PROJECT. THE QUALIFIED SPECIAL INSPECTOR SHALL REFERENCE THESE PLANS AND CHAPTER 17 OF THE IBC FOR ALL SPECIAL INSPECTION REQUIREMENTS. SPECIAL INSPECTION REPORTS SHOULD BE SUBMITTED WEEKLY.
THE APPROVED AGENCY SHALL SUBMIT COPIES OF ALL INSPECTION REPORTS TO THE ARCHITECT/ENGINEER AND THE AUTHORITY HAVING JURISDICTION (BUILDING OFFICIAL) FOR REVIEW. THE SPECIAL INSPECTION SHALL BRING DISCREPANCIES TO THE IMMEDIATE ATTENTION OF THE GENERAL CONTRACTOR FOR CORRECTION. IF THE DISCREPANCIES ARE NOT CORRECTED, THE DISCREPANCIES SHALL BE BROUGHT TO THE ATTENTION OF THE BUILDING OFFICIAL AND TO THE ARCHITECT PRIOR TO THE COMPLETION OF THAT PHASE OF THE WORK. IN ADDITION TO SPECIAL INSPECTION REPORTS AND TESTS, SUBMIT REPORTS AND CERTIFICATES NOTED IN IBC 1704.5 TO THE AUTHORITY HAVING JURISDICTION. FINAL REPORTS DOCUMENTING SPECIAL INSPECTIONS AND TESTS MUST BE SUBMITTED TO THE BUILDING OFFICIAL PER IBC 1704.2.4.

STATEMENT OF SPECIAL INSPECTIONS:

THIS SPECIAL INSPECTIONS STATEMENT HAS BEEN PREPARED WITH THE UNDERSTANDING THAT SEOR AND THE BUILDING OFFICIAL REPRESENTATIVE WILL:

- REVIEW AND ACCEPT THE QUALIFICATIONS OF THE SPECIAL INSPECTORS
- OBSERVE THE SPECIAL INSPECTION OPERATIONS TAKING PLACE AT THE PROJECT SITE TO ENSURE THAT THE SPECIAL INSPECTORS ARE COMPETENT AND CARRYING OUT THEIR ASSIGNED RESPONSIBILITIES AS SPECIFIED IN THIS STATEMENT.
- REVIEW ALL THE SPECIAL INSPECTION REPORTS THAT THE SPECIAL INSPECTOR HAS PROVIDED THEM WITH.
- CONDUCT INSPECTIONS AS SPECIFIED BY IBC SECTION 110.3

THE FOLLOWING SPECIAL INSPECTIONS APPLY TO THIS PROJECT:

- SPECIAL INSPECTIONS FOR STANDARD BUILDINGS PER IBC 1705.1 [REQUIRED]
- STORM SHELTER INSPECTIONS SHALL MATCH THE REQUIREMENTS OF THE HOST BUILDING PER SECTION 106 OF 2020 ICC-500. [REQUIRED]

SPECIAL INSPECTION OF SHOP-FABRICATED GRAVITY LOAD-BEARING MEMBERS AND ASSEMBLIES:

SPECIAL INSPECTION OF SHOP-FABRICATED GRAVITY LOAD BEARING MEMBERS & ASSEMBLIES SHALL BE PERFORMED BY THE SPECIAL INSPECTOR AS STATED IN SECTION 1704.2.5, WHICH INCLUDES THE FOLLOWING:

- BEFORE FABRICATION BEGINS, SPECIAL INSPECTORS REPRESENTING THE GENERAL CONTRACTOR NEED TO VISIT THE FABRICATOR'S SHOP TO VERIFY THAT THE FABRICATOR HAS DETAILED FABRICATION AND QUALITY CONTROL (QC) PROCEDURES IN PLACE. THESE PROCEDURES SHOULD COVER INSPECTION, WORKMANSHIP CONTROL, MATERIAL CONTROL, AND THE FABRICATOR'S ABILITY TO ADHERE TO THE APPROVED CONSTRUCTION DOCUMENTS AND REFERENCED STANDARDS.
- THE FABRICATOR MUST HAVE DETAILED PROCEDURES FOR MATERIAL CONTROL AVAILABLE FOR THE INSPECTOR TO REVIEW. THESE PROCEDURES SHOULD SHOW THAT THE FABRICATOR CAN MAINTAIN ACCURATE RECORDS AND PROCESSES SO THAT AT ANY POINT DURING FABRICATIATION, THE MATERIAL SPECIFICATION, GRADE, AND RELEVANT TEST REPORTS FOR PRIMARY LOAD-CARRYING MEMBERS CAN BE IDENTIFIED.

SPECIAL INSPECTION OF STRUCTURAL STEEL:

AS PER IBC SECTION 1705.2.1, A QUALIFIED SPECIAL INSPECTOR OF AN "APPROVED AGENCY" PROVIDING QUALITY ASSURANCE (QA) SPECIAL INSPECTIONS FOR THE PROJECT SHALL REVIEW AND CONFIRM THE FABRICATOR AND ERECTOR'S QUALITY CONTROL (QC) PROCEDURES FOR COMPLETENESS AND ADEQUACY RELATIVE TO AISC 360-16 CHAPTER N, AISC 303-16 CODE OF STANDARD AND PRACTICE, AWS D1.1-2015 STRUCTURAL WELDING CODE, AND 2018 IBC CODE REQUIREMENTS FOR THE FABRICATOR'S SCOPE OF WORK.

- QA AGENCY PROVIDING SPECIAL INSPECTIONS MUST EMPLOY PERSONNEL WHO MEET THE MINIMUM QUALIFICATION REQUIREMENTS FOR INSPECTION AND NONDESTRUCTIVE TESTING (NDT) AS PER AISC 360 SECTION N4.
- ENSURE THE FABRICATOR AND ERECTOR QUALITY CONTROL (QC) PROGRAM COMPLIES WITH AISC 360 SECTION N2.
- QC AND QA PERSONNEL SHALL INSPECT WELDS AND BOLTS PER THE SCHEDULE OF SPECIAL INSPECTIONS BELOW.
- ALL AWS D1.1 STRUCTURAL WELDING CODE PROVISIONS FOR STATICALLY LOADED STRUCTURES SHALL APPLY.
- NONDESTRUCTIVE TESTING (NDT) OF WELDS:
  - NON-DESTRUCTIVE TESTING (NDT) OF WELDED JOINTS PER AISC 360 N5.5
  - RISK CATEGORY FOR DETERMINATION OF THE EXTENT OF NDT PER AISC 360 N5.5B IS NOTED IN THE DESIGN CRITERIA AND LOADS SECTION OF THESE GENERAL REQUIREMENTS. NDT MUST BE DOCUMENTED, AND REPORTS SHOULD SPECIFY THE TESTED WELD BY PIECE MARK AND LOCATION.
- ADDITIONAL INSPECTION TASKS PER AISC 360 SECTION N5.8.

POST-INSTALLED ANCHORS TO CONCRETE AND MASONRY: SHALL COMPLY WITH IBC SECTION 1703. INSPECTIONS MUST COMPLY WITH THE REQUIREMENTS IN THE APPROVED ICC EVALUATION REPORT AND THE DESIGN REQUIREMENTS SPECIFIED ON THE DRAWINGS. REFER TO THE POST INSTALLED ANCHORS SECTION OF THESE NOTES FOR ANCHORS THAT ARE THE BASIS OF THE DESIGN. THE SPECIAL INSPECTOR MUST ENSURE THAT THE ANCHORS ARE IN ACCORDANCE WITH THE POST-INSTALLED ANCHORS SECTION OF THESE NOTES OR AS SPECIFICALLY INDICATED ON THE DRAWINGS. SUBSTITUTIONS MUST BE APPROVED BY THE SER AND REQUIRE SUPPORTING CALCULATIONS AND THE CURRENT 2018 IBC-RECOGNIZED ICC EVALUATION SERVICES (ES) REPORT. SPECIAL INSPECTORS MUST DOCUMENT COMPLIANCE WITH ALL ELEMENTS REQUIRED IN THE RELEVANT ICC EVALUATION SERVICES (ES) REPORT IN THEIR SPECIAL INSPECTION REPORT.

PREFABRICATED CONSTRUCTION: ALL PREFABRICATED CONSTRUCTION SHALL CONFORM TO IBC SECTION 1703.

PER THE ICC-500, SECTION 111.1 STRUCTURAL OBSERVATION :

DURING CONSTRUCTION OF THE STORM SHELTER, THE BUILDING OWNER SHALL EMPLOY A REGISTERED DESIGN PROFESSIONAL TO CONDUCT VISUAL OBSERVATIONS OF THE CONSTRUCTION OF THE STRUCTURAL SYSTEM FOR GENERAL CONFORMANCE TO THE APPROVED CONSTRUCTION DOCUMENTS AT SIGNIFICANT CONSTRUCTION STAGES AND AT COMPLETION OF THE CONSTRUTION OF THE STRUCTURAL SYSTEM.

STRUCTURAL OBSERVATION SHALL NOT OBVIATE THE NEED FOR OTHER INSPECTIONS OR TESTING REQUIRED BY THIS STANDARD OR APPLICABLE CODE.

DEFICIENCIES SHALL BE REPORTED IN WRITING TO THE ATHORITY HAVING JURISDICTION AND OWNER OR THE OWNER'S AUTHORIZED AGENT. AT THE CONCLUSION OF THE WORK, THE REGISTERED DESIGN PROFESSIONAL WHO MADE THE STRUCTURAL OBSERVATIONS SHALL SUBMIT TO THE AUTHORITY HAVING JURISDICTION A WRITTEN STATEMENT THAT THE SITE VISITS HAVE BEEN MADE AND SHALL IDENTIFY ANY REPORTED DEFICIENCIES THAT, TO THE BEST OF THE STRUCTURAL OBSERVER'S KNOWLEDGE, HAVE NOT BEEN RESOLVED.

SECTION 110
SPECIAL INSPECTIONS

110.1 SPECIAL INSPECTIONS

SPECIAL INSPECTION SHALL BE PROVIDED IN ACCORDANCE SITH THIS SECTION, IN ADDITION TO THOSE REQUIRED BY THE *AUTHORITY HAVING JURISDICTION* IN ACCORDANCE WITH THE *APPLICABLE CODE*. ONE STATEMENT OF *SPECIAL INSPECTIONS* SHALL BE PERMITTED TO APPLY TO BOTH *HOST BUILDING* AND *STORM SHELTER* CONSTRUCTION.

EXCEPTION: PREFABRICATED OR PANELIZED *STORM SHELTER* COMPONENTS THAT HAVE BEEN INSPECTED AND *LABELED* BY AN *APPROVED AGENCY* MEETING THE REQUIREMENTS OF THE *APLICABLE CODE*.

110.1.2 SPECIAL CASES

SPECIAL INSPECTIONS SHALL BE PROVIDED FOR PROPOSED WORK COMPRISED OF THE FOLLOWING:

1. CONSTRUCTION MATERIALS AND SYSTEMS THAT ARE ALTERNATIVES TO TRADITIONAL MATERIALS AND SYSTEMS PRESCRIBED BY THE *APPLICABLE CODE*.
2. UNUSUAL DESIGN AND CONSTRUCTION APPLICATIONS.
3. ANCHORS POS-INSTALLED IN HARDENED CONCRETE AND MASONRY, WHERE USED FOR ANCHORAGE OF *STORM SHELTER* COMPONENTS FORMING A PART OF THE *STORM SHELTER* ENCLOSURE OR FOR ANCHORAGE OF THE *STORM SHELTER* STRUCTURE TO FOUNDATIONS SHALL BE IN ACCORDANCE WITH SECTION 110.1.2.1.

110.1.2.1 SPECIAL INSPECTIONS TO VERIFY ANCHOR INSTALLATION

A *SPECIAL INSPECTION* SHALL BE PROVIDED TO VERIFY THE POS-INSTALLED ANCHOR INSTALLATION AND CAPACITY IN ACCORDANCE WITH SECTION 106.2.1. FOR POST-INSTALLED ANCHORAGE TO FOUNDATIONS, *SPECIAL INSPECTION* SHALL BE PROVIDED TO VERIFY FOUNDATION ADEQUACY IN ACCORDANCE WITH SECTIONS 106.2.1 AND 307.

TABLE 1705.3
REQUIRED SPECIAL INSPECTIONS AND TESTS OF CONCRETE CONSTRUCTION

TYPE	CONTINUOUS SPECIAL INSPECTION	PERIODIC SPECIAL INSPECTION	REFERENCED STANDARD[a]	IBC REFERENCE
1. INSPECT REINFORCEMENT, INCLUDING RESTRESSING TENDONS, AND VERIFY PLACEMENT.	-	X	ACI 318: CH. 20, 25.2, 25.3, 26.6.1-26.6.3	-
2. REINFORCING BAR WELDING:				
a. VERIFY WELDABILITY OF REINFORCING BARS OTHER THAN ASTM A706;			AWS D1.4	-
b. INSPECT SINGLE-PASS FILLET WELDS, MAXIMUM 5/16"; AND	-	X	ACI 318: 26.6.4	
c. INSPECT ALL OTHER WELDS.	X	X		
3. INSPECT ANCHORS CAST IN CONCRETE.	-	X	ACI 318: 17.8.2	-
4. INSPECT ANCHORS POST-INSTALLED IN HARDENED CONCRETE MEMBERS.[B]				
a. ADHESIVE ANCHORS INSTALLED IN HORIZONTALLY OR UPWARDLY INCLINED ORIENTATIONS TO RESIST SUSTAINED TENSION LOADS.	X	X	ACI 318: 17.8.2.4	-
b. MECHANICAL ANCHORS AND ADHESIVE ANCHORS NOT DEFINED IN 4.A.			ACI 318: 17.8.2	
5. VERIFY USE OF REQUIRED DESIGN MIX.	-	X	ACI 318: CH. 19, 26.4.3, 26.4.4	-
6. PRIOR TO CONCRETE PLACEMENT, FABRICATE SPECIMENS FOR STRENGTH TESTS, PERFORM SLUMP AND AIR CONTENT TESTS, AND DETERMINE THE TEMPERATURE OF THE CONCRETE.	X		ASTM C31 ASTM C172 ACI 318: 26.5, 26.12	-
7. INSPECT CONCRETE AND SHOTCRETE PLACEMENT FOR PROPER APPLICATION TECHNIQUES.	X		ACI 318: 26.5	-
8. VERIFY MAINTENANCE OF SPECIFIED CURING TEMPERATURE AND TECHNIQUES.	-	X	ACI 318: 26.10	-
9. INSPECT PRESTRESSED CONCRETE FOR: A. APPLICATION OF PRESTRESSING FORCES; AND B. GROUTING OF BONDED PRESTRESSING TENDONS.	X X		ACI 318: CH. 20, 25.2, 25.3, 26.6.1-26.6.3	-
10. INSPECT ERECTION OF PRECAST CONCRETE MEMBERS.	-	X	ACI 318: 26.9	-
11. FOR PRECAST CONCRETE DIAPHRAGM CONNECTIONS OR REINFORCEMENT AT JOINTS CLASSIFIED AS MODERATE OR HIGH DEFORMABILITY ELEMENTS (MDE OR HDE) IN STRUCTURES ASSIGNED TO SEISMIC DESIGN CATEGORY C, D, E OR F, INSPECT SUCH CONNECTIONS AND REINFORCEMENT IN THE FIELD FOR:				
a. INSTALLATION OF THE EMBEDDED PARTS	X		ACI 318: 26.13.1.3	-
b. COMPLETION OF THE CONTINUITY OF REINFORCEMENT ACROSS JOINTS.	X		ACI 550.5	
c. COMPLETION OF CONNECTIONS IN THE FIELD.	X			
12. INSPECT INSTALLATION TOLERANCES OF PRECAST CONCRETE DIAPHRAGM CONNECTIONS FOR COMPLIANCE WITH ACI 550.5.	-	X	ACI 318: 26.13.1.3	-
13. VERIFY IN-SITU CONCRETE STRENGTH, PRIOR TO STRESSING OF TENDONS IN POST-TENSIONED CONCRETE AND PRIOR TO REMOVAL OF SHORES AND FORMS FROM BEAMS AND STRUCTURAL SLABS.	-	X	ACI 318: 26.11.2	-
14. INSPECT FORMWORK FOR SHAPE, LOCATION AND DIMENSIONS OF THE CONCRETE MEMBER BEING FORMED.	-	X	ACI 318: 26.11.1.2(b)	-

MINIMUM REQUIREMENTS FOR INSPECTIONS OF STRUCTURAL STEEL CONSTRUCTION

INSPECTION TASKS	QC	QA	REFERENCED STANDARD
INSPECTION TASKS PRIOR TO WELDING			
1. Welder qualification records and continuity records	P	O	AISC 360 TABLE N5.4-1
2. Welding procedure specifications (WPSs) available	P	O	AISC 360 TABLE N5.4-1
3. Manufacturing certifications for welding consumables available	P	O	AISC 360 TABLE N5.4-1
4. Material identification (type/grade)	P	O	AISC 360 TABLE N5.4-1
5. Welder Identification system	P	O	AISC 360 TABLE N5.4-1
8. Configuration and finish of access holes	P	O	AISC 360 TABLE N5.4-1
9. Fit-up of fillet welds • Dimensions (alignment gaps at root) • Cleanliness (condition of steel surfaces) • Tacking (tack weld quality and location)	P	O	AISC 360 TABLE N5.4-1
10. Check welding equipment	P	O	AISC 360 TABLE N5.4-1
INSPECTION TASKS DURING WELDING			
1. Use of qualified welders	P	O	AISC 360 TABLE N5.4-2
2. Control and handling of welding consumables • Packaging • Exposure Control	P	O	AISC 360 TABLE N5.4-2
3. No welding over cracked track welds	P	O	AISC 360 TABLE N5.4-2
4. Environmental conditions • Wind speed within limits • Precipitation and temperature	P	O	AISC 360 TABLE N5.4-2
5. WPS followed • Settings on welding equipment • Travel speed • Selected welding materials • Shielding gas type/flowrate • Preheat applied • Interpass temperature maintained (min/max) • Proper position (F,V,H,OH)	P	O	AISC 360 TABLE N5.4-2
6. Welding techniques • Interpass and final cleaning • Each pass within profile limitations • Each pass meets quality requirements	P	O	AISC 360 TABLE N5.4-2
INSPECTION TASKS AFTER WELDING			
1. Welds cleaned	P	O	AISC 360 TABLE N5.4-3
2. Size, length, and locations of welds	P	O	AISC 360 TABLE N5.4-3
3. Welds meet visual acceptance criteria • Crack prohibition • Weld/base-metal fusion • Crater cross section • Weld profiles • Weld size • Undercut • Porosity	P	O	AISC 360 TABLE N5.4-3
4. Arc strikes	P	O	AISC 360 TABLE N5.4-3
5. k-area	P	O	AISC 360 TABLE N5.4-3
6. Weld access holes in roled heavy shapes and built-up heavy shapes	P	O	AISC 360 TABLE N5.4-3
7. Backing removed and weld tabs removed (if required)	P	O	AISC 360 TABLE N5.4-3
8. Repair activities	P	O	AISC 360 TABLE N5.4-3
9. Document acceptance or rejection of welded joint or member	P	O	AISC 360 TABLE N5.4-3
10. No prohibited welds have been added without the approval of the EOR	P	O	AISC 360 TABLE N5.4-3
INSPECTION TASKS PRIOR TO BOLTING			
1.Manufacturer's certifications available for fastener materials	P	O	AISC 360 TABLE N5.6-1
2.Fasteners marked in accordance with ASTM requirements	P	O	AISC 360 TABLE N5.6-1
3.Correct fasteners selected for the joint detail (grade, type, bolt length if threads are to be excluded from shear plane)	P	O	AISC 360 TABLE N5.6-1
4.Correct bolting procedures selected for joint detail	P	O	AISC 360 TABLE N5.6-1
5.Connecting elements, including the appropriate faying surface condition and hole preparation, if specified, meet applicable requirements.	P	O	AISC 360 TABLE N5.6-1
6.Pre-installation verification testing by installation personnel observed and documented for fastener assemblies and methods used	P	O	AISC 360 TABLE N5.6-1
7.Proper storage provided for bolts, nuts, washers and other fasteners components	P	O	AISC 360 TABLE N5.6-1
INSPECTION TASKS DURING BOLTING			
1. Fastener assemblies, of suitable condition, placed in all holes and washers are positioned as required	P	O	AISC 360 TABLE N5.6-2
2. Joint brought to the snug-tight condition prior to the pre-tensioning operation	P	O	AISC 360 TABLE N5.6-2
3. Fastener component not turned by the wrench prevented from rotating	P	O	AISC 360 TABLE N5.6-2
4. Fasteners are pre-tensioned in accordance with the RCSC Specification, progressing systematically from the most rigid point toward the free edges.	P	O	AISC 360 TABLE N5.6-2
INSPECTION TASKS AFTER BOLTING	P	O	AISC 360 TABLE N5.6-2
1. Document acceptance or rejection of bolted connections	P	O	AISC 360 TABLE N5.6-2

O - Observe these items on a random basis. Operations need not be delayed pending these inspections
P - Perform these tasks for each welded joint or member, each bolted connection, or each steel element

SCHEDULES OF SPECIAL INSPECTIONS:

TABLE 1705.6
REQUIRED SPECIAL INSPECTIONS AND TESTS OF SOILS

TYPE	CONTINUOUS SPECIAL INSPECTION	PERIODIC SPECIAL IN- SPECTION
1. VERIFY MATERIALS BELOW SHALLOW FOUNDATIONS ARE ADEQUATE TO ACHIEVE THE DESIGN BEARING CAPACITY.	-	X
2. VERIFY EXCAVATIONS ARE EXTENDED TO PROPER DEPTH AND HAVE REACHED PROPER MATERIAL.	-	X
3. PERFORM CLASSIFICATION AND TESTING OF COMPACTED FILL MATERIALS.	-	X
4. VERIFY USE OF PROPER MATERIALS, DENSITIES AND LIFT THICKNESSES DURING PLACEMENT AND COMPACTION OF COMPACTED FILL.	X	-
5. PRIOR TO PLACEMENT OF COMPACTED FILL, INSPECT SUBGRADE AND VERIFY THAT SITE HAS BEEN PREPARED PROPERLY.	-	X

TABLE 1705.2.3
REQUIRED SPECIAL INSPECTIONS OF OPEN-WEB STEEL JOISTS AND JOIST GIRDERS

TYPE	CONTINUOUS SPECIAL INSPECTION	PERIODIC SPECIAL INSPECTION	REFERENCED STANDARD[a]
1. INSTALLATION OF OPEN-WEB STEEL JOISTS AND JOIST GIRDERS.			
a. END CONNECTIONS – WELDING OR BOLTED.	-	X	SJI SPECIFICATIONS LISTED IN SECTION 2207.1.
b. BRIDGING – HORIZONTAL OR DIAGONAL.	-	X	-
1. STANDARD BRIDGING.	X	X	SJI SPECIFICATIONS LISTED IN SECTION 2207.1.
2. BRIDGING THAT DIFFERS FROM THE SJI SPECIFICATIONS LISTED IN SECTION 2207.1.	-	X	-

NO.	DATE	REVISION	APP.

IDS Engineering Group
13430 NW. Freeway, Suite 700
Houston, Tx. 77040
713.462.3178
TxEng Firm 2726 / TxSurv Firm 10110700

CONCEPT ENGINEERS
TX. FIRM REGISTRATION # F-04417
Structures for the whole community

PRELIMINARY
NOT FOR CONSTRUCTION,
BIDDING, OR PERMIT PURPOSES.
FOR REVIEW ONLY.
DAVID MOORE
TEXAS LICENSE NO. 139405
Date: 05/08/26

CITY OF HOUSTON
DEPARTMENT OF PUBLIC WORKS AND ENGINEERING

LIFT STATION RENEWAL AND REPLACEMENT FY 2023
MARKET ST. NO.2
LIFT STATION GENERAL NOTES (SHEET 3 OF 3)

WBS NUMBER	FOR CITY OF HOUSTON USE ONLY
R-000267-0179-4	
DRAWING SCALE	
AS NOTED	
CITY OF HOUSTON PM	
NAWARAJ PANTA, P.E.	
DWG. NO. MKT-S-04	SHEET NO. 190 OF 361

IDS JOB No. 0057-085-00

PLOTTED: 5/21/2019 1:28 PM
FILE PATH: G:\COMMERCIAL PROJECTS\24137 - Lift Station Rehab & Construction\STRUCTURAL\xV-DWGS\XREF\24137-TBlock.dwg

PLOTTED: 5/21/2019 1:28 PM

FILE PATH: G:\COMMERCIAL PROJECTS\24137 - Lift Station Rehab & Construction\STRUCTURAL\JV_DWGS\XREF\24137-TBlock.dwg

NO.	DATE	REVISION	APP.

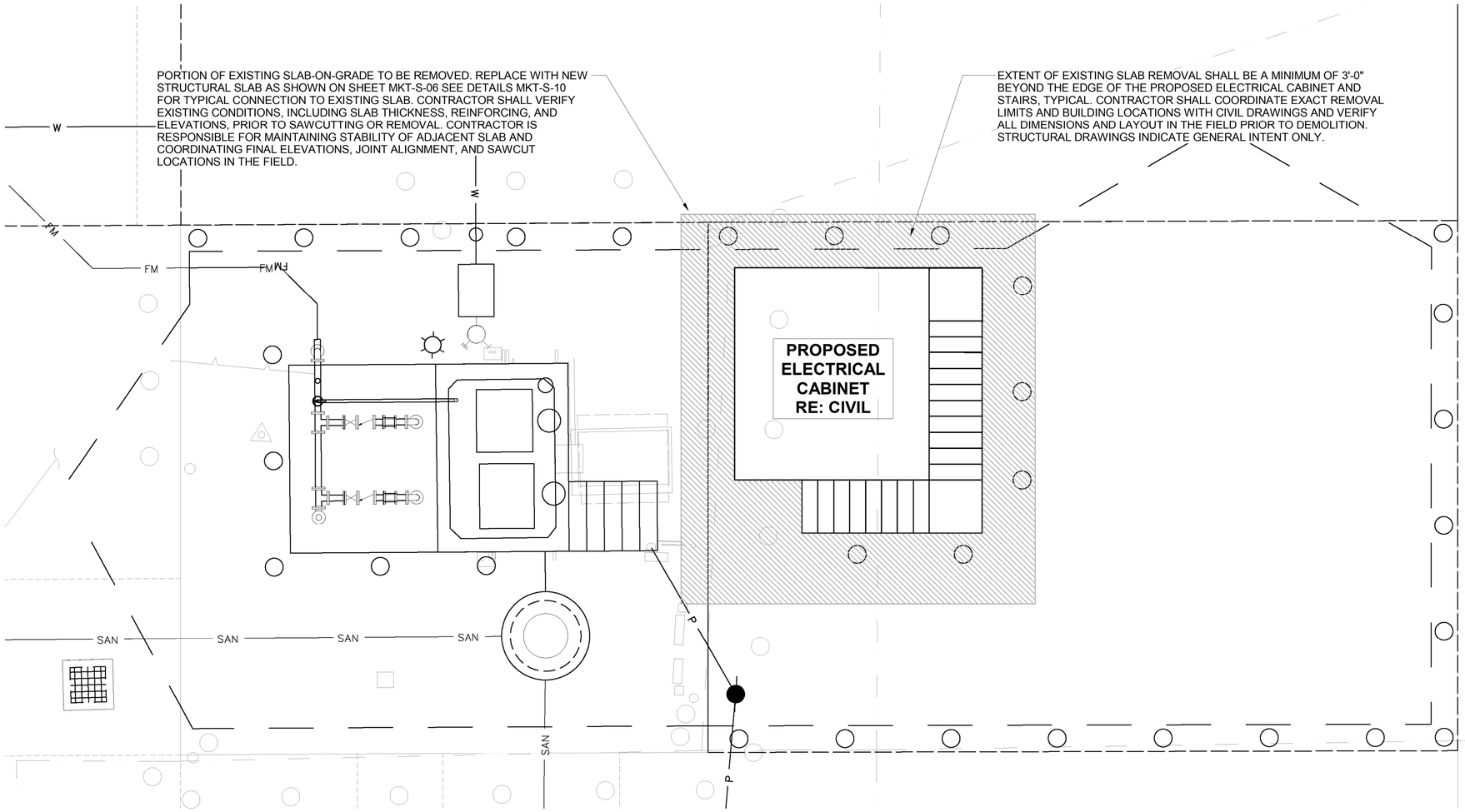

IDS Engineering Group
13430 NW. Freeway, Suite 700
Houston, Tx. 77040
713.462.3178
TxEng Firm 2726 / TxSurv Firm 10110700

CONCEPT ENGINEERS
TX. FIRM REGISTRATION # F-04417
Structures for the whole community

PRELIMINARY
NOT FOR CONSTRUCTION, BIDDING, OR PERMIT PURPOSES.
FOR REVIEW ONLY.
DAVID MOORE
TEXAS LICENSE NO. 139405

Date: 05/08/26

CITY OF HOUSTON
DEPARTMENT OF PUBLIC WORKS AND ENGINEERING

LIFT STATION RENEWAL AND REPLACEMENT FY 2023

MARKET ST. NO.2 LIFT STATION SITE PLAN

WBS NUMBER	FOR CITY OF HOUSTON USE ONLY
R-000267-0179-4	
DRAWING SCALE	
AS NOTED	
CITY OF HOUSTON PM	
NAWARAJ PANTA, P.E.	

DWG. NO.	SHEET NO.
MKT-S-05	191 OF 361

IDS JOB No. 0057-085-00

PLOTTED: 5/21/2019 1:28 PM

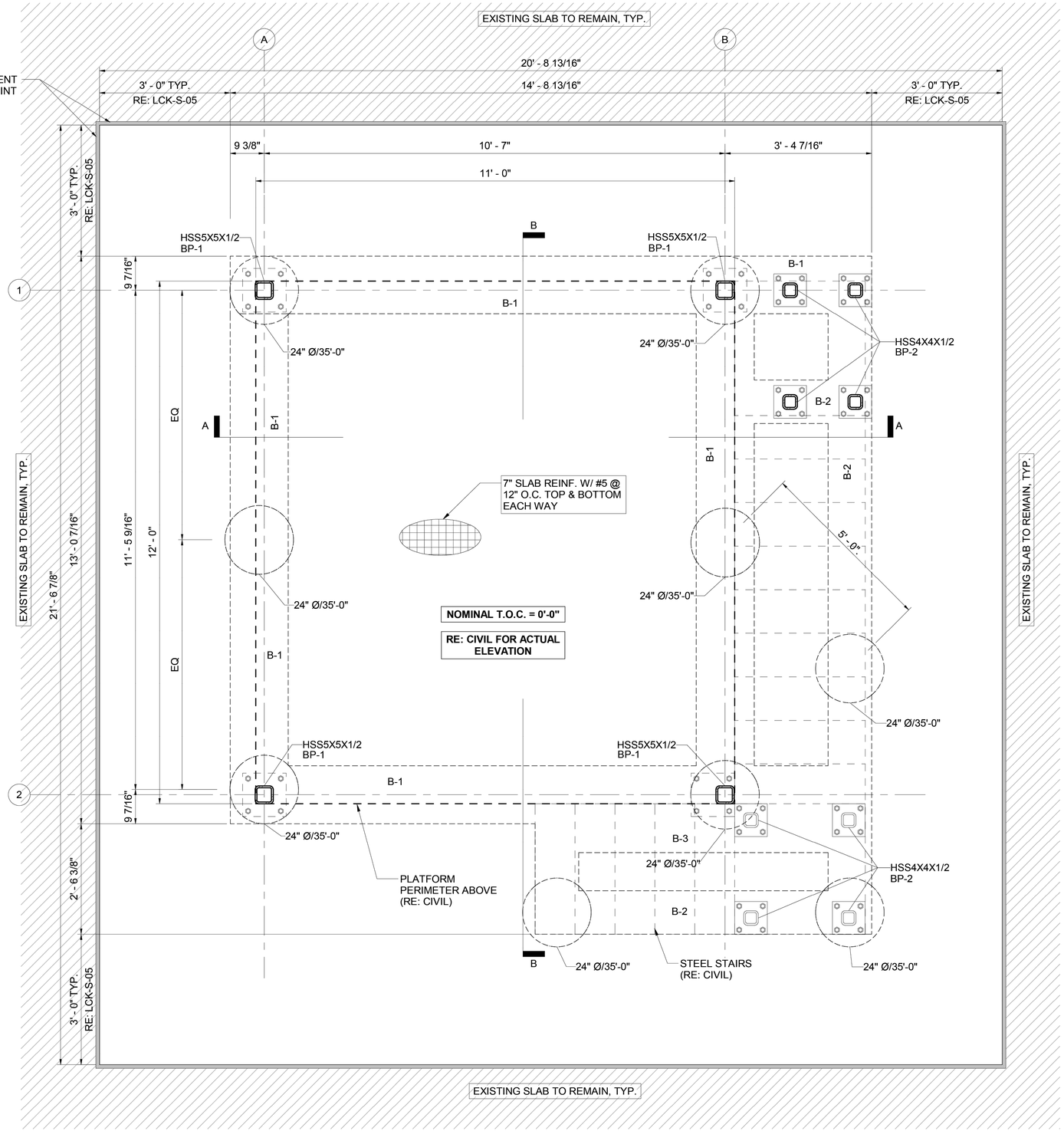

1 ELECTRICAL CABINET - FOUNDATION PLAN

3/4" = 1'-0"

FOUNDATION NOTES:

1. CENTER ALL DRILLED-AND-UNDERREAMED PIERS UNDER CENTERLINE OF STEEL COLUMN. IF NO STEEL COLUMN IS SHOWN, CENTER DRILLED-AND-UNDERREAMED PIERS UNDER CENTER OF GRADE BEAM.
2. ALL STEEL TO BE HOT DIPPED GALVANIZED.
3. FINISH FLOOR ELEVATION = 0'-0". FINISH FLOOR ELEVATION OF NEW STRUCTURAL SLAB TO MATCH ELEVATION OF EXISTING SLAB. RE: CIVIL FOR ACTUAL ELEVATION.
4. "P1" AS SHOWN ON PLAN INDICATES CONCRETE PEDESTAL TYPE P1. THE TOP ELEVATION OF ALL PEDESTALS IS AT -1'-0" TYP U.N.O. REFER TO MKT-S-09 FOR DIMENSIONS & REINF.
5. "B1" AS SHOWN ON PLAN INDICATES CONCRETE BEAM TYPE B1. THE TOP ELEVATION OF ALL BEAMS IS AT -1'-0" TYP U.N.O. REFER TO MKT-S-09 FOR BEAM SCHEDULE AND DETAILS.
6. "20/48" AS SHOWN ON PLAN INDICATES A DRILLED-AND-UNDERREAMED PIER WITH A 20 INCH DIAMETER SHAFT AND 48-INCH DIAMETER UNDERREAM/BELL. BOTTOM OF UNDERREAM/BELL SHALL BEAR A MINIMUM OF 18'-0" BELOW EXISTING GRADE, UNLESS NOTED OTHERWISE. AT -3'-0", TYP, U.N.O. RE: MKT-S-09 FOR DRILLED-AND-UNDERREAMED PIERS SCHEDULE AND DETAILS.
7. DRILLED-AND-UNDERREAMED PIERS SHALL BE CONSTRUCTED IN ACCORDANCE WITH THE GEOTECHNICAL REPORT BY HVJ ASSOCIATES, INC., REPORT NO. HGT2210460.1.1(A), DATED 03/31/2026. CONTRACTOR SHALL PROVIDE CASING, DEWATERING, AND/OR OTHER TEMPORARY SUPPORT METHODS AS REQUIRED TO MAINTAIN STABILITY OF DRILLED PIER EXCAVATIONS.
8. REFER TO CIVIL, MECHANICAL, ELECTRICAL, AND PLUMBING DRAWINGS FOR DIMENSIONS AND LOCATIONS OF EQUIPMENT, SLOPES, DEPRESSED AREAS, PIPES, CONDUITS, AND OTHER ITEMS NOT SHOWN ON STRUCTURAL DRAWINGS.
9. (*) INDICATES BEAMS WITH VARYING DEPTHS. RE: SECTION
10. PORTION OF EXISTING SLAB-ON-GRADE TO BE REMOVED SHALL BE REPLACED WITH NEW STRUCTURAL SLAB AS SHOWN ON PLAN IN THIS SHEET. CONTRACTOR SHALL VERIFY EXISTING CONDITIONS, INCLUDING SLAB THICKNESS, REINFORCING, AND ELEVATIONS, PRIOR TO SAWCUTTING OR REMOVAL. CONTRACTOR SHALL MAINTAIN STABILITY OF ADJACENT SLAB AND COORDINATE FINAL ELEVATIONS, JOINT ALIGNMENT, AND SAWCUT LOCATIONS IN THE FIELD.
11. EXTENT OF EXISTING SLAB REMOVAL SHALL BE A MINIMUM OF 3'-0" BEYOND THE EDGE OF THE PROPOSED ELECTRICAL BUILDING AND CONCRETE STAIRS, TYPICAL. CONTRACTOR SHALL COORDINATE EXACT REMOVAL LIMITS AND BUILDING LOCATIONS WITH CIVIL DRAWINGS AND VERIFY ALL DIMENSIONS AND LAYOUT IN THE FIELD PRIOR TO DEMOLITION. STRUCTURAL DRAWINGS INDICATE GENERAL INTENT ONLY.

NO.	DATE	REVISION	APP.

IDS Engineering Group
13430 NW. Freeway, Suite 700
Houston, Tx. 77040
713.462.3178
TxEng Firm 2726 / TxSurv Firm 10110700

CONCEPT ENGINEERS
TX. FIRM REGISTRATION # F-04417
Structures for the whole community

PRELIMINARY
NOT FOR CONSTRUCTION, BIDDING, OR PERMIT PURPOSES.
FOR REVIEW ONLY.
DAVID MOORE
TEXAS LICENSE NO. 139405
Date: 05/08/26

CITY OF HOUSTON
DEPARTMENT OF PUBLIC WORKS AND ENGINEERING

LIFT STATION RENEWAL AND REPLACEMENT FY 2023
MARKET ST. NO.2 LIFT STATION ELECTRICAL CABINET FOUNDATION

WBS NUMBER	FOR CITY OF HOUSTON USE ONLY
R-000267-0179-4	
DRAWING SCALE	
AS NOTED	
CITY OF HOUSTON PM	
NAWARAJ PANTA, P.E.	
DWG. NO. MKT-S-06	SHEET NO. 192 OF 361

IDS JOB No. 0057-085-00

FILE PATH: G:\COMMERCIAL PROJECTS\24137 - Lift Station Rehab & Construction\STRUCTURAL\JV_DWGS\XREF\24137-TBlock.dwg

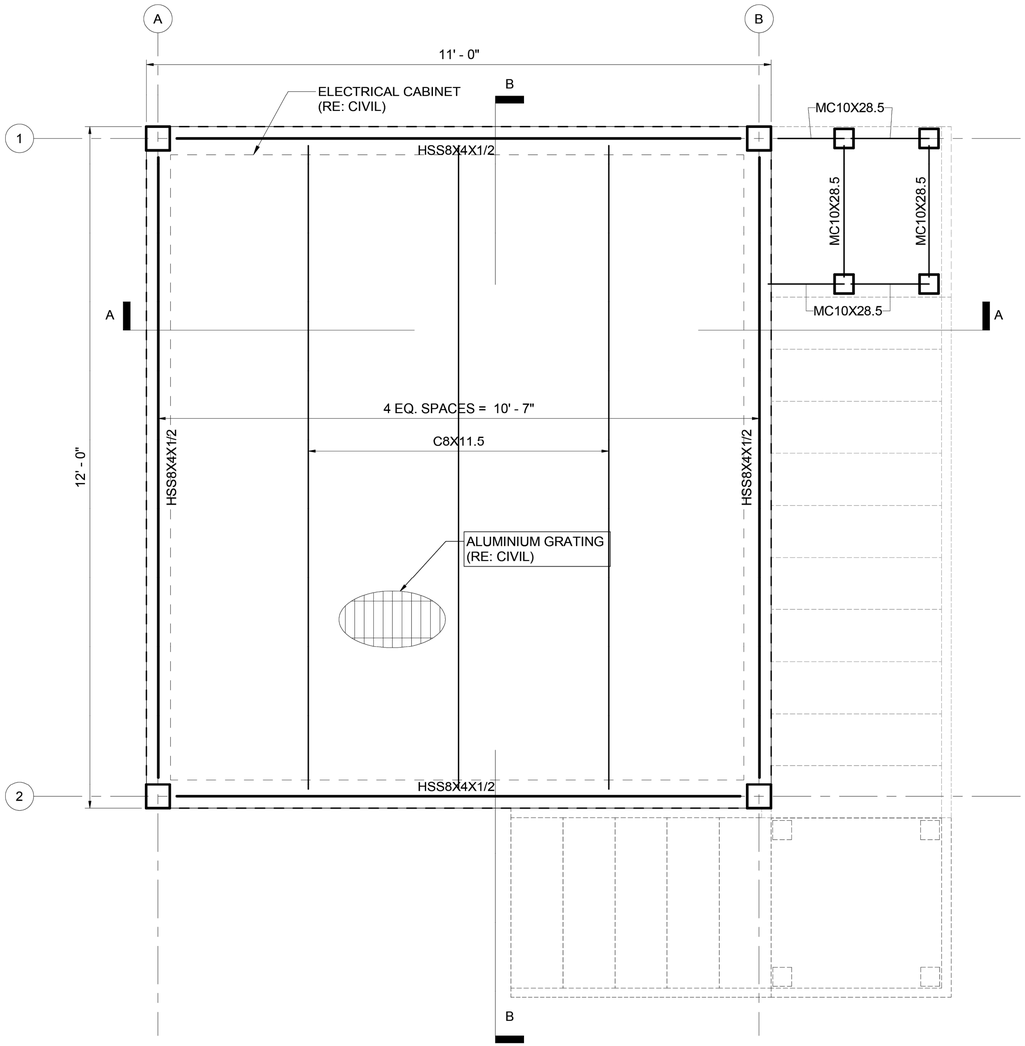

1 ELECTRICAL CABINET - FRAMING PLAN

3/4" = 1'-0"

NO.	DATE	REVISION	APP.

IDS Engineering Group
13430 NW. Freeway, Suite 700
Houston, Tx. 77040
713.462.3178
TxEng Firm 2726 / TxSurv Firm 10110700

CONCEPT ENGINEERS
TX. FIRM REGISTRATION # F-04417
Structures for the whole community

PRELIMINARY
NOT FOR CONSTRUCTION,
BIDDING, OR PERMIT PURPOSES.
FOR REVIEW ONLY.
DAVID MOORE
TEXAS LICENSE NO. 139405

Date: 05/08/26

CITY OF HOUSTON
DEPARTMENT OF PUBLIC WORKS AND ENGINEERING

LIFT STATION RENEWAL AND REPLACEMENT FY 2023

MARKET ST. NO.2 LIFT STATION ELECTRICAL CABINET FRAMING

WBS NUMBER	FOR CITY OF HOUSTON USE ONLY
R-000267-0179-4	
DRAWING SCALE	
AS NOTED	
CITY OF HOUSTON PM	
NAWARAJ PANTA, P.E.	
SHEET NO. 193 OF 361	

DWG. NO. MKT-S-07

IDS JOB No. 0057-085-00

PLOTTED: 5/21/2019 1:28 PM

FILE PATH: G:\COMMERCIAL PROJECTS\24137 - Lift Station Rehab & Construction\STRUCTURAL\V_DWGS\XREF\24137-TBlock.dwg

PLOTTED: 5/21/2019 1:28 PM

FILE PATH: G:\COMMERCIAL PROJECTS\24137 - Lift Station Rehab & Construction\STRUCTURAL\V_DWGS\XREF\24137-TBlock.dwg

NO.	DATE	REVISION	APP.

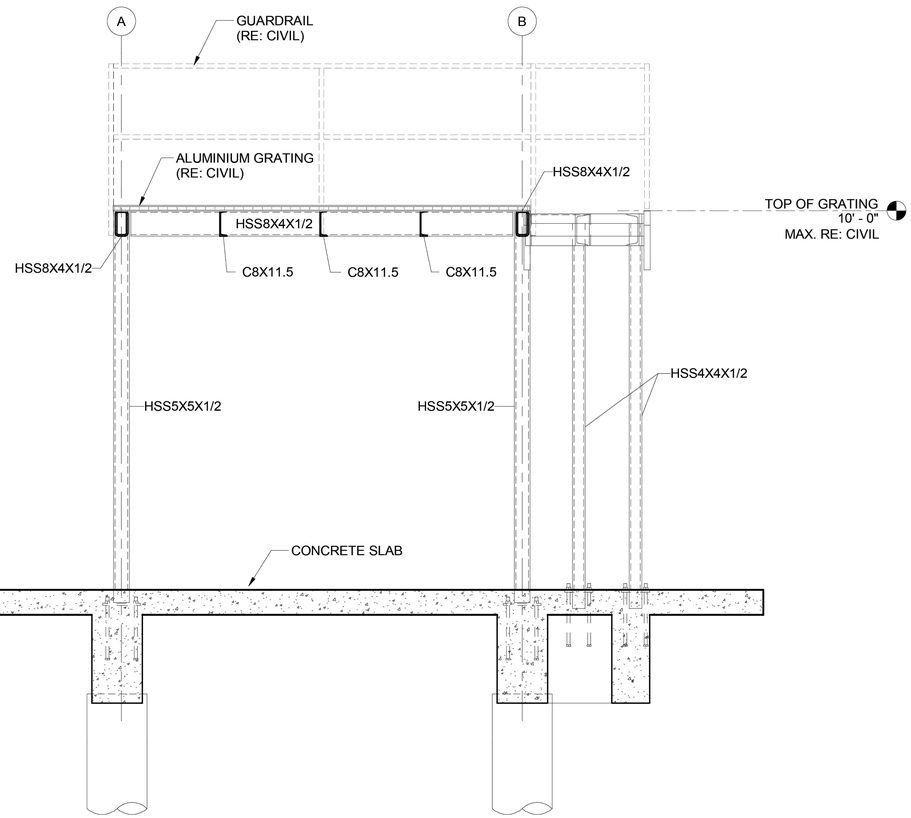

1 ELECTRICAL BUILDING SECTION A-A
1/2" = 1'-0"

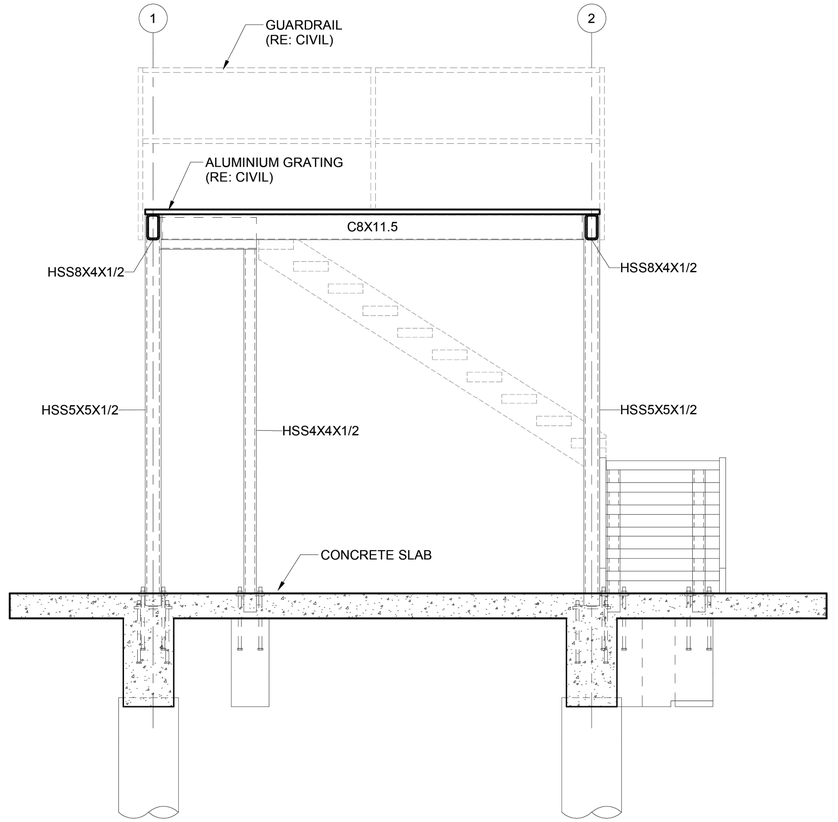

2 ELECTRICAL BUILDING SECTION B-B
1/2" = 1'-0"

IDS Engineering Group
13430 NW. Freeway, Suite 700
Houston, Tx. 77040
713.462.3178
TxEng Firm 2726 / TxSurv Firm 10110700

CONCEPT ENGINEERS
TX. FIRM REGISTRATION # F-04417
Structures for the whole community

PRELIMINARY
NOT FOR CONSTRUCTION,
BIDDING, OR PERMIT PURPOSES.
FOR REVIEW ONLY.
DAVID MOORE
TEXAS LICENSE NO. 139405

Date: 05/08/26

CITY OF HOUSTON
DEPARTMENT OF PUBLIC WORKS AND ENGINEERING

LIFT STATION RENEWAL AND REPLACEMENT FY 2023
MARKET ST. NO.2
LIFT STATION ELECTRICAL CABINET SECTIONS

WBS NUMBER	FOR CITY OF HOUSTON USE ONLY
R-000267-0179-4	
DRAWING SCALE	
AS NOTED	
CITY OF HOUSTON PM	
NAWARAJ PANTA, P.E.	

DWG. NO.	SHEET NO.
MKT-S-08	194 OF 361

IDS JOB No. 0057-085-00

PLOTTED: 5/21/2019 1:28 PM

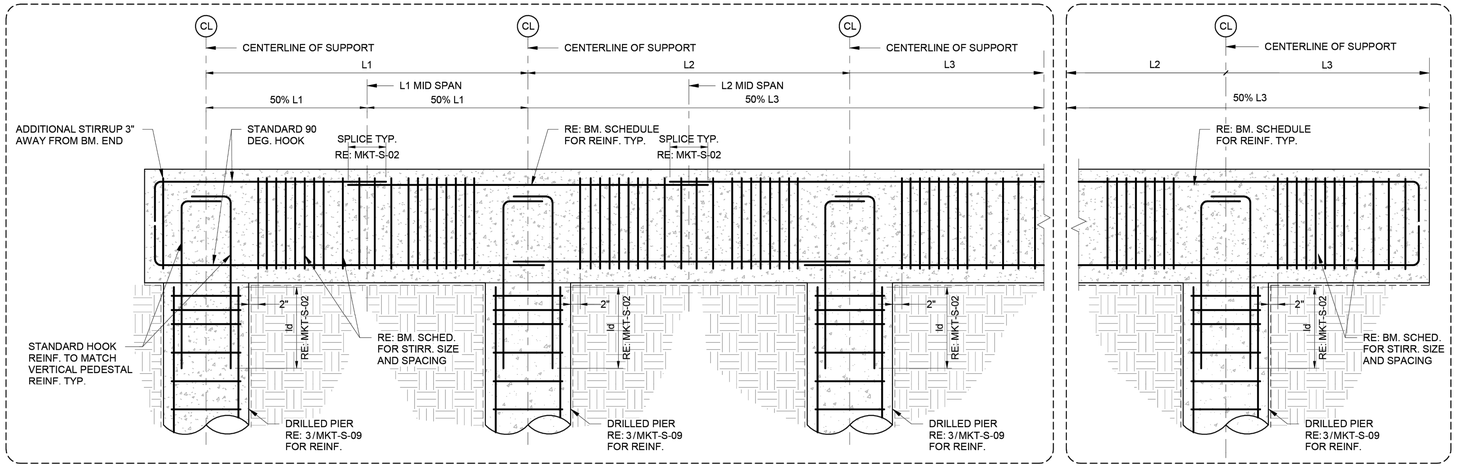

SECTION AT CONTINUOUS BEAM

SECTION AT CANTILEVERED BEAM

1 TYPICAL REINFORCEMENT SPLICE DETAIL AT BEAM (NEW DETAIL).

3/4" = 1'-0"

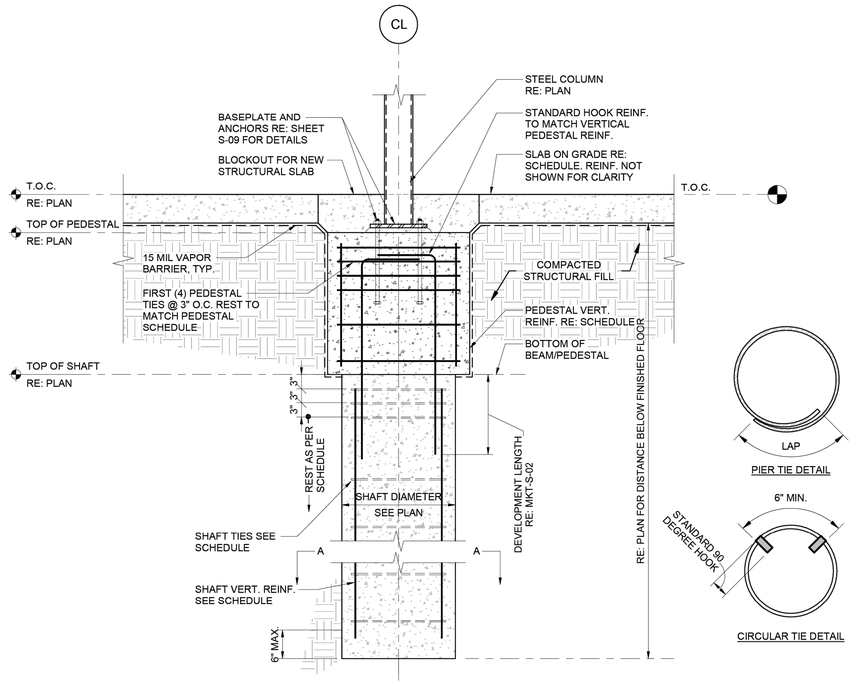

PEDESTAL SCHEDULE			
TAG	VERT. REINF.	CLOSED TIES	NOTES
TYPE P1	(12) #6	#4 @ 10" O.C.	TOP 4- #4 CLOSED TIES @ 3" O.C., REST @ 10" O.C.
TYPE P2	(12) #6	#4 @ 10" O.C.	TOP 4- #4 CLOSED TIES @ 3" O.C., REST @ 10" O.C.
TYPE P3	(12) #6	#4 @ 10" O.C.	TOP 4- #4 CLOSED TIES @ 3" O.C., REST @ 10" O.C.

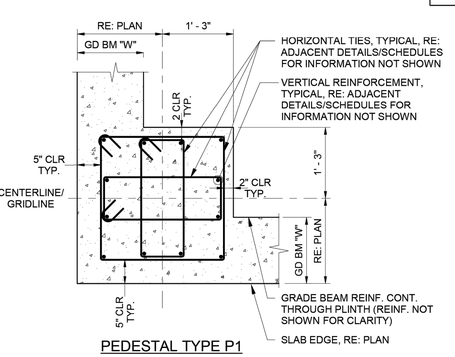

PEDESTAL TYPE P1

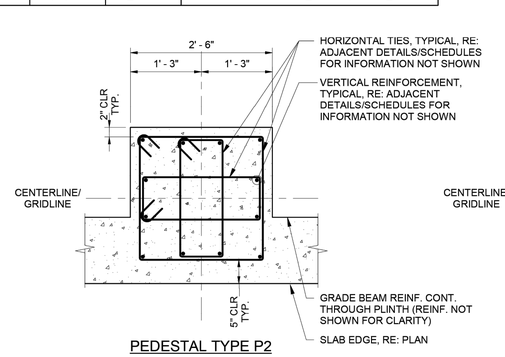

PEDESTAL TYPE P2

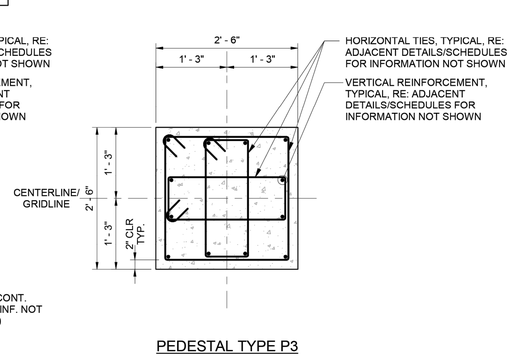

PEDESTAL TYPE P3

2 TYP. PEDESTAL DETAILS/SCHEDULE.

3/4" = 1'-0"

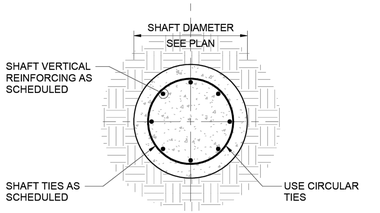

SECTION A-A

DRILLED SHAFT SCHEDULE		
SHAFT DIAMETER	VERTICAL REINF.	CLOSED TIES
18"	(6) #6	#4 @ 10" O.C.
24"	(8) #7	#4 @ 10" O.C.
30"	(9) #8	#4 @ 10" O.C.
36"	(10) #9	#4 @ 10" O.C.

3 TYPICAL STRAIGHT SHAFT DETAILS

3/4" = 1'-0"

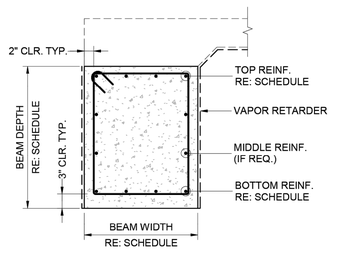

BEAM SCHEDULE						
TAG	WIDTH	DEPTH	TOP REINFORCEMENT	MIDDLE REINFORCEMENT	BOTTOM REINFORCEMENT	STIRRUPS
B1	1'-4"	2'-6"	(4) #7	-	(4) #7	#4 @ 10" O.C. (3 @ 3" O.C., REST @ 10" O.C.)
B2	1'-0"	2'-6"	(3) #7	-	(3) #7	#4 @ 10" O.C. (3 @ 3" O.C., REST @ 10" O.C.)
B3	2'-4"	2'-6"	(6) #7	-	(6) #7	#4 @ 10" O.C. (3 @ 3" O.C., REST @ 10" O.C.)

4 BEAM SCHEDULE.

3/4" = 1'-0"

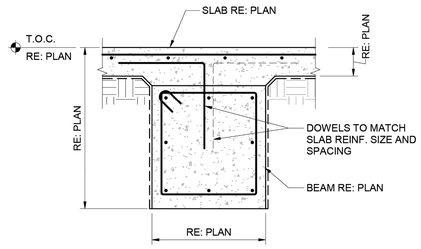

5 SECTION AT INTERIOR BEAM

3/4" = 1'-0"

IDS Engineering Group
13430 NW. Freeway, Suite 700
Houston, Tx. 77040
713.462.3178
TxEng Firm 2726 / TxSurv Firm 10110700

CONCEPT ENGINEERS
TX. FIRM REGISTRATION # F-04417
Structures for the whole community

PRELIMINARY
NOT FOR CONSTRUCTION, BIDDING, OR PERMIT PURPOSES.
FOR REVIEW ONLY.
DAVID MOORE
TEXAS LICENSE NO. 139405
Date: 05/08/26

CITY OF HOUSTON
DEPARTMENT OF PUBLIC WORKS AND ENGINEERING

LIFT STATION RENEWAL AND REPLACEMENT FY 2023
MARKET ST. NO.2
LIFT STATION FOUNDATION DETAILS & SCHEDULES

WBS NUMBER	FOR CITY OF HOUSTON USE ONLY
R-000267-0179-4	
DRAWING SCALE	
AS NOTED	
CITY OF HOUSTON PM	
NAWARAJ PANTA, P.E.	
DWG. NO. MKT-S-09	SHEET NO. 195 OF 361

NO.	DATE	REVISION	APP.

FILE PATH: G:\COMMERCIAL PROJECTS\24137 - Lift Station Rehab & Construction\STRUCTURAL\V_DWGS\XREF\24137-TBlock.dwg

IDS JOB No. 0057-085-00

PLOTTED: 5/21/2019 1:28 PM

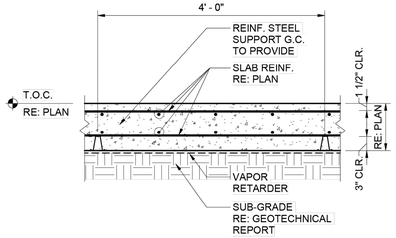

1 TYPICAL SLAB SECTION DETAIL

3/4" = 1'-0"

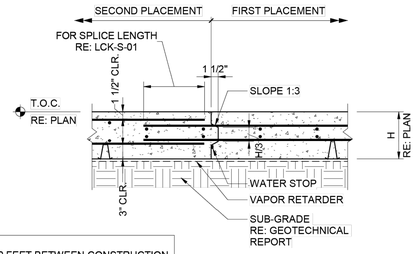

NOTE:
MAXIMUM 80 FEET BETWEEN CONSTRUCTION JOINTS AND 72 HOURS MINIMUM BETWEEN ADJACENT PLACEMENTS.

2 TYPICAL CONSTRUCTION JOINT

3/4" = 1'-0"

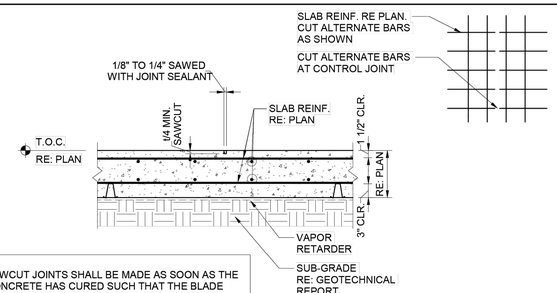

NOTE:
1. SAWCUT JOINTS SHALL BE MADE AS SOON AS THE CONCRETE HAS CURED SUCH THAT THE BLADE DOES NOT DISLODGE. DO NOT WAIT MORE THAN 8 HOURS AFTER CONCRETE HAS SET.
2. STOP ALTERNATE BARS 6" FROM SAWCUT.
3. CUT ALTERNATE BARS.

3 TYPICAL SLAB CONTROL JOINT

3/4" = 1'-0"

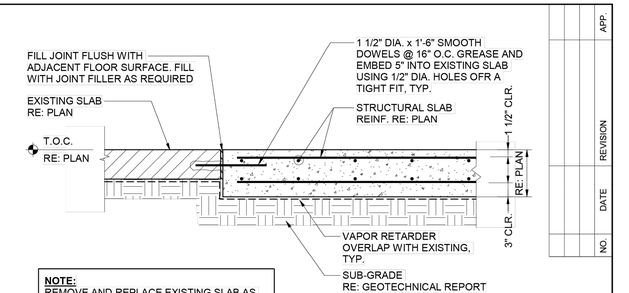

NOTE:
REMOVE AND REPLACE EXISTING SLAB AS REQUIRED TO ACCOMODATE NEW STRUCTURAL SLAB. RE: S5 FOR LOCATIONS OF EXISTING SLAB TO BE REMOVED.

4 TYP NEW TO EXISTING SLAB CONSTRUCTION JOINT

NO SCALE

NO.	DATE	REVISION	APP.

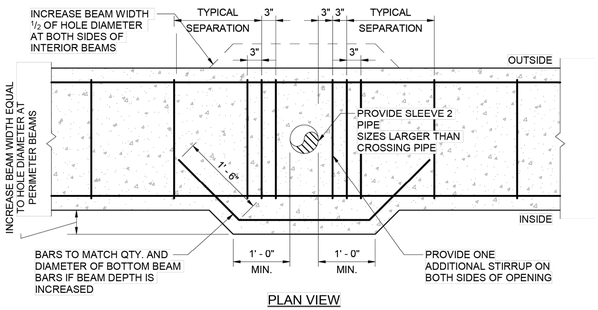

PLAN VIEW

5 VERT. PIPE OPENING LARGER THAN 3" THRU GD. BM.

3/4" = 1'-0"

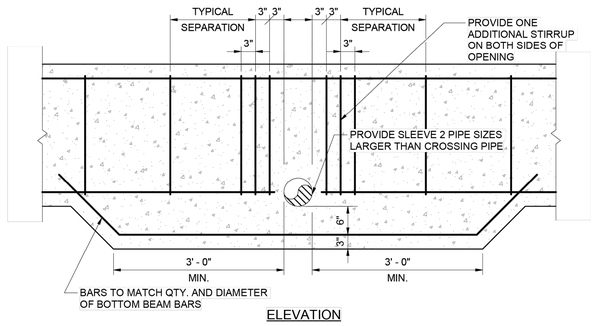

ELEVATION

6 PIPE OPENING THRU GD. IN CONFLICT W/BOT. REINF.

3/4" = 1'-0"

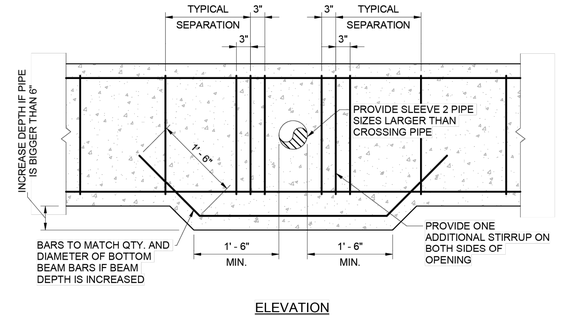

ELEVATION

7 TYP. DETAIL PIPE OPENING THRU GRADE BEAM

3/4" = 1'-0"

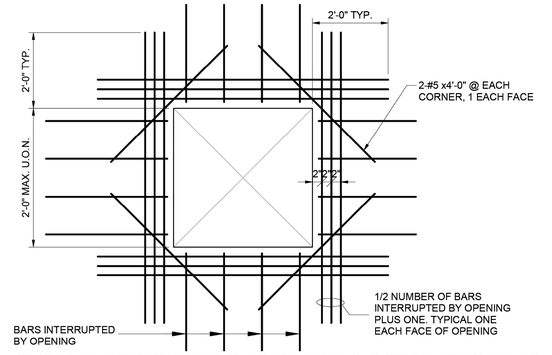

8 TYPICAL ADDITIONAL BAR PLACING DETAIL FOR SLAB

3/4" = 1'-0"

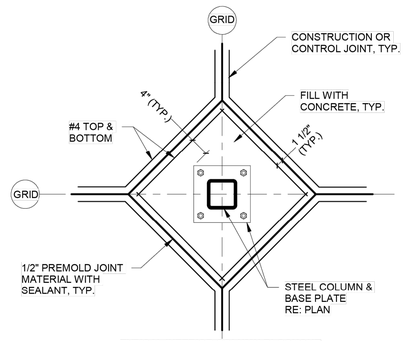

TYPICAL INTERIOR COLUMN BLOCKOUT

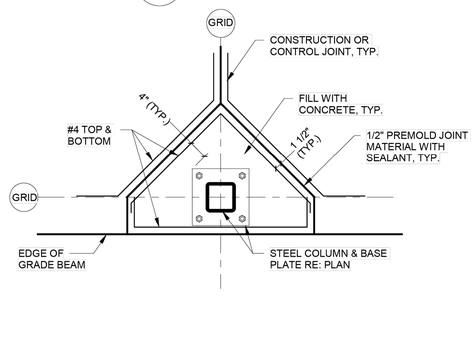

TYPICAL EXTERIOR COLUMN BLOCKOUT

9 TYPICAL BLOCKOUT DETAIL

3/4" = 1'-0"

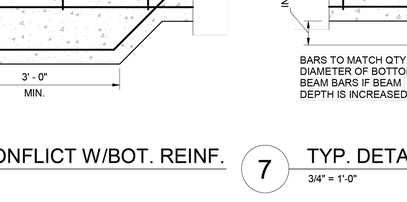

10 TYP. BAR PLACING DETAILS

3/4" = 1'-0"

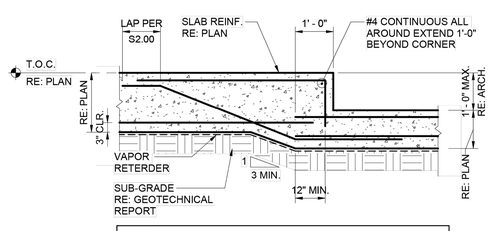

NOTE:
TRANSVERSE REINFORCEMENT NOT SHOWN FOR CLARITY

11 TYP. SLAB DEPRESSION DETAIL

1/2" = 1'-0"

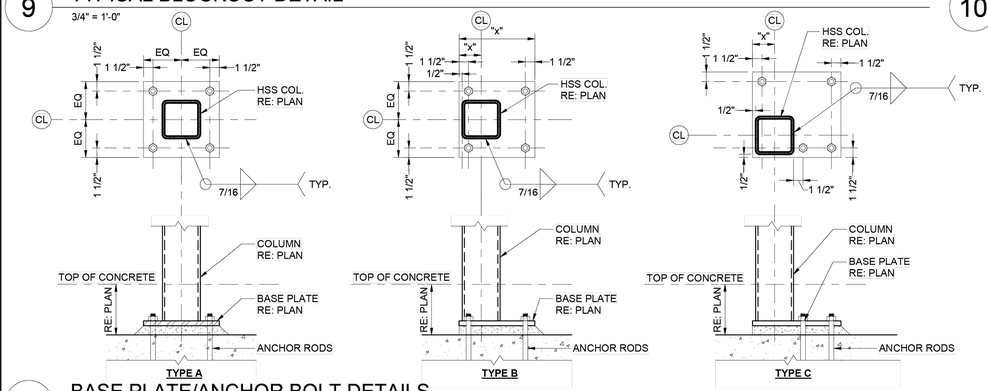

BASE PLATE AND ANCHOR BOLT SCHEDULE

PLATE NUMBER	PLATE TYPE	PLATE THICNESS	PLATE Fy	PLATE DIM	ANCHOR BOLT TYPE	ANCHOR BOLT ⌀	ANCHOR BOLT LENGTH (L)
BP-1	TYPE A	3/4"	36 ksi	12"X12"	TYPE 1	3/4"	18"
BP-2	TYPE B	3/4"	36 ksi	12"X12"	TYPE 1	3/4"	18"
BP-3	TYPE C	3/4"	36 ksi	9"X9"	TYPE 1	3/4"	18"

12 BASE PLATE/ANCHOR BOLT DETAILS

1" = 1'-0"

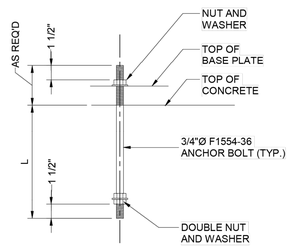

ANCHOR BOLT ELEVATION

IDS Engineering Group
13430 NW. Freeway, Suite 700
Houston, Tx. 77040
713.462.3178
TxEng Firm 2726 / TxSurv Firm 10110700

CONCEPT ENGINEERS
TX. FIRM REGISTRATION # F-04417
Structures for the whole community

PRELIMINARY
NOT FOR CONSTRUCTION, BIDDING, OR PERMIT PURPOSES.
FOR REVIEW ONLY.
DAVID MOORE
TEXAS LICENSE NO. 139405
Date: 05/08/26

CITY OF HOUSTON
DEPARTMENT OF PUBLIC WORKS AND ENGINEERING

LIFT STATION RENEWAL AND REPLACEMENT FY 2023
MARKET ST. NO.2
LIFT STATION TYPICAL FOUNDATION DETAILS

WBS NUMBER	FOR CITY OF HOUSTON USE ONLY
R-000267-0179-4	
DRAWING SCALE	
AS NOTED	
CITY OF HOUSTON PM	
NAWARAJ PANTA, P.E.	
DWG. NO. MKT-S-10	SHEET NO. 196 OF 361

IDS JOB No. 0057-085-00

FILE PATH: G:\COMMERCIAL PROJECTS\24137 - Lift Station Rehab & Construction\STRUCTURAL\JV_DWGS\XREF\24137-TBlock.dwg

PLOTTED: 5/21/2019 1:28 PM

SINGLE SHEAR PLATE CONNECTION SCHEDULE					
BEAM	BOLTS	DIAMETER	GRADE	PLATE	WELD
W6x	2	5/8"	A325	1/4"	3/16" FILLET
W8x	2	3/4"	A325	1/4"	3/16" FILLET
W10x	3	3/4"	A325	1/4"	3/16" FILLET
W12x	3	7/8"	A325	5/16"	1/4" FILLET
W14x	3	7/8"	A325	5/16"	1/4" FILLET
W16x	4	7/8"	A325	5/16"	1/4" FILLET
W18x	5	7/8"	A325	5/16"	1/4" FILLET
W21x	6	7/8"	A325	3/8"	5/16" FILLET
W24x	6	7/8"	A325	3/8"	5/16" FILLET

1 CONNECTION SCHEDULE
3/4" = 1'-0"

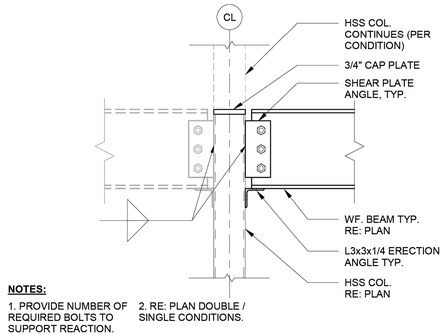

NOTES:
1. PROVIDE NUMBER OF REQUIRED BOLTS TO SUPPORT REACTION.
2. RE: PLAN DOUBLE / SINGLE CONDITIONS.

2 TYP. BM. TO COL. SHEAR CONNECTION
1" = 1'-0"

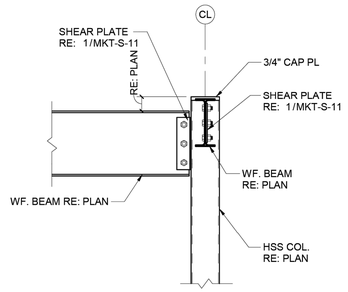

3 BM./COL. CONNECTION DET.
3/4" = 1'-0"

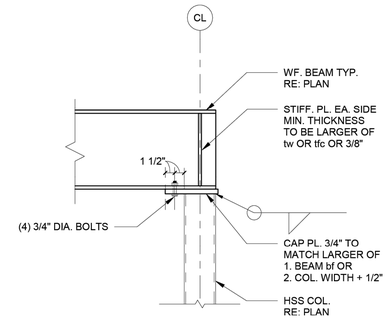

4 TYP. BEAM OVER COLUMN CONNECTION
1" = 1'-0"

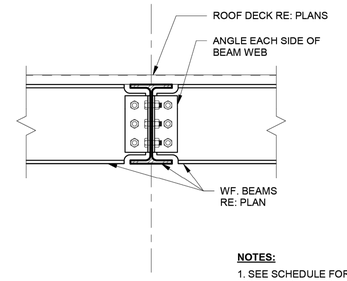

NOTES:
1. SEE SCHEDULE FOR MORE INFORMATION.

5 TYP. BEAM TO BEAM CONNECTION
1" = 1'-0"

NOTES:
SEE CONNECTION SCHEDULE FOR INFO. NOT SHOWN

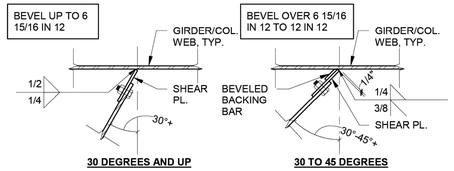

30 DEGREES AND UP | **30 TO 45 DEGREES**

BEVEL 4 3/8 IN 12 TO 12 IN 12

A= 1/8 FOR BEVELS 4 3/8 IN 12 TO 6 15/16 IN 12
A= 3/16 FOR BEVELS OVER 6 15/16 IN 12 TO 12 IN 12

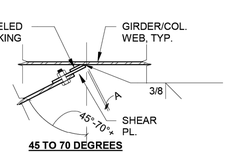

45 TO 70 DEGREES

6 SKEWED BEAM CONNECTIONS
1" = 1'-0"

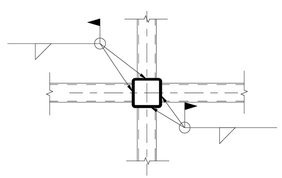

TYP. HSS BEAM TO HSS COL. (PLAN)

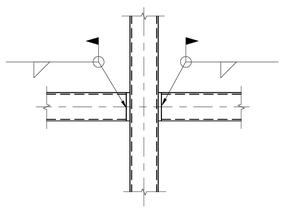

TYP. HSS BEAM TO HSS COL. (SECTION)

7 TYP. CANTILEVERED STL. BM.
1" = 1'-0"

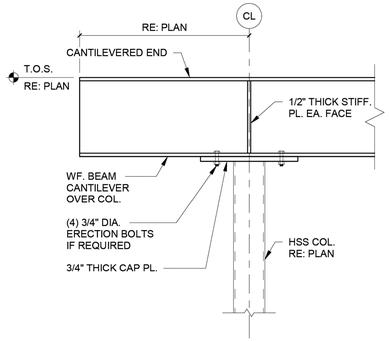

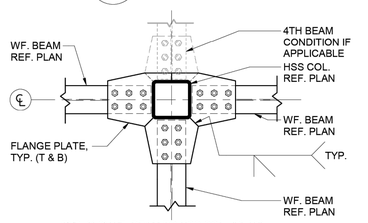

TYP. (4-3) WF. BEAM TO HSS COL. (PLAN)

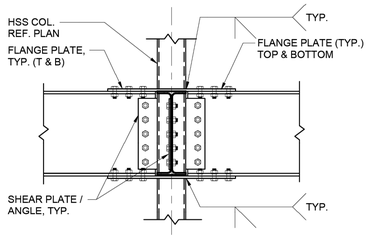

TYP. (4-3) WF. BEAM TO HSS COL. (SECTION)

8 TYP. HSS COLUMN CAP PLATE
1" = 1'-0"

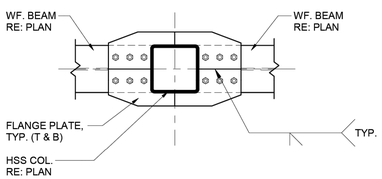

TYP. (2) WF. BEAM TO HSS COL. (PLAN)

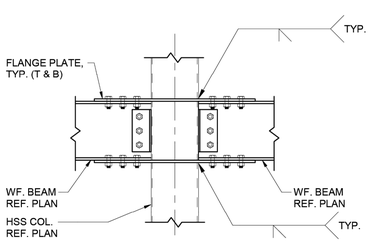

TYP. (2) WF. BEAM TO HSS COL. (SECTION)

9 TYP. HSS COLUMN SPLICE DETAILS
1 1/2" = 1'-0"

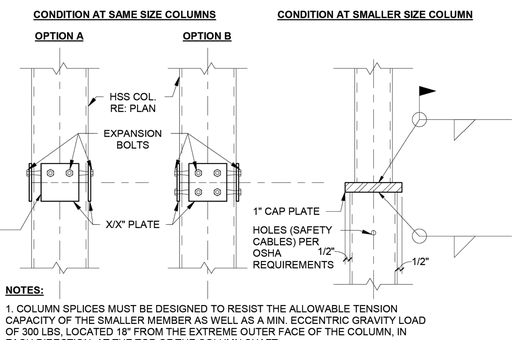

NOTES:
1. COLUMN SPLICES MUST BE DESIGNED TO RESIST THE ALLOWABLE TENSION CAPACITY OF THE SMALLER MEMBER AS WELL AS A MIN. ECCENTRIC GRAVITY LOAD OF 300 LBS, LOCATED 18" FROM THE EXTREME OUTER FACE OF THE COLUMN, IN EACH DIRECTION, AT THE TOP OF THE COLUMN SHAFT.

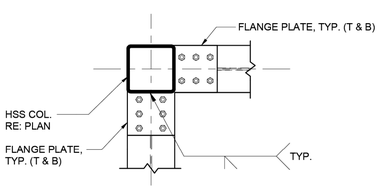

TYP. WF. BEAM TO HSS COL. CORNER (PLAN)

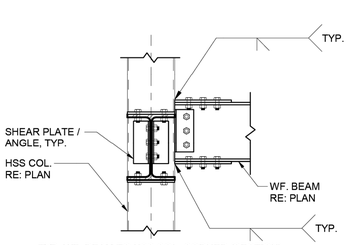

TYP. WF. BEAM TO HSS COL. CORNER (SECTION)

10 TYP. BEAM. SPLICE CONNX.
1" = 1'-0"

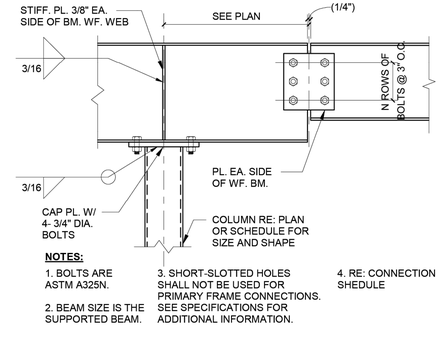

NOTES:
1. BOLTS ARE ASTM A325N.
2. BEAM SIZE IS THE SUPPORTED BEAM.
3. SHORT-SLOTTED HOLES SHALL NOT BE USED FOR PRIMARY FRAME CONNECTIONS. SEE SPECIFICATIONS FOR ADDITIONAL INFORMATION.
4. RE: CONNECTION SHEDULE

11 TYP. MOMENT CONNECTIONS
3/4" = 1'-0"

NOTES:
1. BOLTS IN WEB CONNECTION SHALLBE SNUG TIGHTENED PRIOR TO WELDING OF FLANGES.
2. SLIP-CRITICAL BOLTED CONNECTION IN WEB USING A325 BOLTS IN HORIZONTAL SHORT-SLOTTED HOLES U.N.O. RESISTANCE BY BOLTS TO SHEAR SHALL BE BY FRICTION, PROPORTIONED USING THE STANDARD HOLE VALUE ON A CLASS "A" SURFACE.
3. REFER TO SPECIFICATIONS FOR CONNECTION DESIGN CRITERIA.
4. PROVIDE PREDESIGNED SHEAR CONNECTIONS AS SHOWN IN AISC LRFD MANUAL WHERE APPLICABLE.
5. IF MOMENT IS SHOWN ON DRAWINGS, PARTIAL PENETRATION WELD TO DEVELOP MOMENT CAN BE USED IN LIEU OF CJP WELD. FOR THIS CASE, WELD SHALL BE REQUIRED TO DEVELOP THE BEAM FLANGE FORCE COMPUTED AS FOLLOWS: Pu= (Mu)/(0.95D).
WHERE: Mu= DESIGN MOMENT (KIP-IN).
D= BEAM DEPTH (INCHES).
Pu= BEAM FLANGE FORCE (KIPS).

NO.	DATE	REVISION	APP.

IDS Engineering Group
13430 NW. Freeway, Suite 700
Houston, Tx. 77040
713.462.3178
TxEng Firm 2726 / TxSurv Firm 10110700

CONCEPT ENGINEERS
TX. FIRM REGISTRATION # F-04417
Structures for the whole community

PRELIMINARY
NOT FOR CONSTRUCTION, BIDDING, OR PERMIT PURPOSES.
FOR REVIEW ONLY.
DAVID MOORE
TEXAS LICENSE NO. 139405
Date: 05/08/26

CITY OF HOUSTON
DEPARTMENT OF PUBLIC WORKS AND ENGINEERING

LIFT STATION RENEWAL AND REPLACEMENT FY 2023
MARKET ST. NO.2 LIFT STATION
TYPICAL STEEL DETAILS

WBS NUMBER	FOR CITY OF HOUSTON USE ONLY
R-000267-0179-4	
DRAWING SCALE	
AS NOTED	
CITY OF HOUSTON PM	
NAWARAJ PANTA, P.E.	
DWG. NO. MKT-S-11	SHEET NO. 197 OF 361

IDS JOB No. 0057-085-00

FILE PATH: G:\COMMERCIAL PROJECTS\24137 - Lift Station Rehab & Construction\STRUCTURAL\JV_DWGS\XREF\24137-TBlock.dwg

PLOTTED: 5/21/2019 1:28 PM

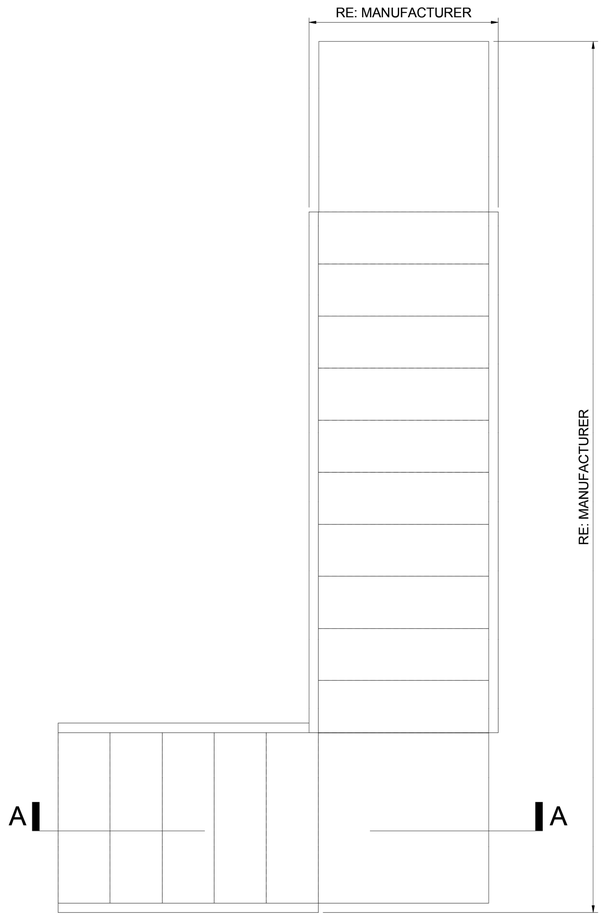

1 ELECTRICAL FOUNDATION PLAN
3/4" = 1'-0"

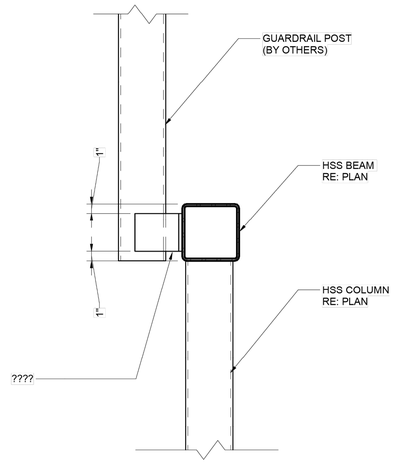

2 HSS BEAM TO HSS COLUMN CONNECTION
1 1/2" = 1'-0"

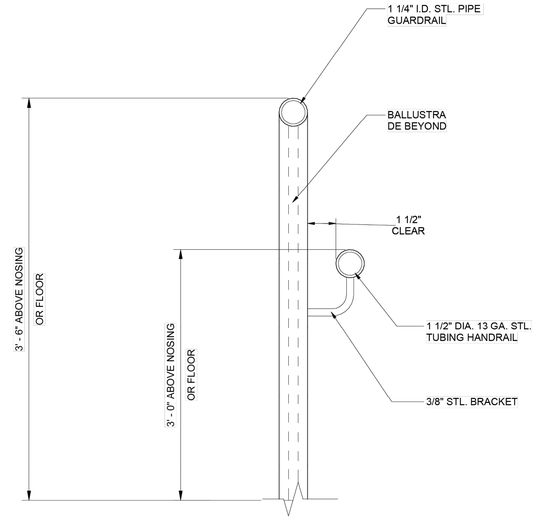

3 HANDRAIL AND GUARDRAIL SECTION
3" = 1'-0"

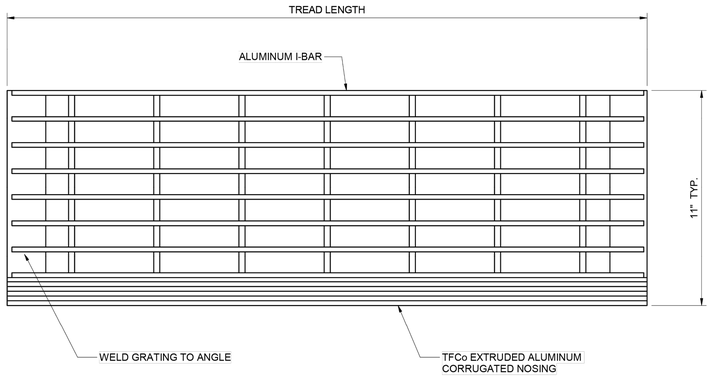

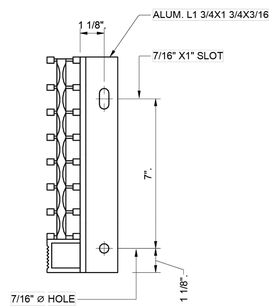

4 STAIR TREAD CONNECTION ON STRINGER BEAM
1 1/2" = 1'-0"

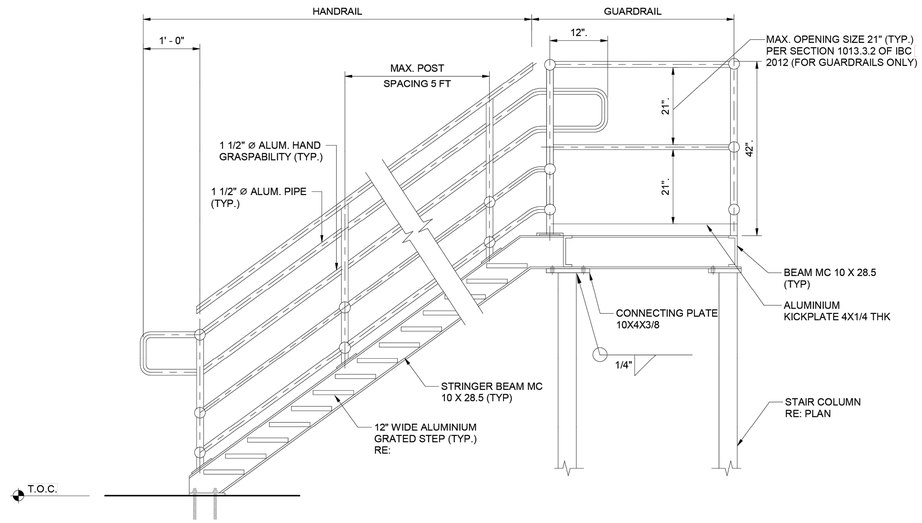

5 SECTION A - A
3/4" = 1'-0"

NO.	DATE	REVISION	APP.

IDS Engineering Group
13430 NW. Freeway, Suite 700
Houston, Tx. 77040
713.462.3178
TxEng Firm 2726 / TxSurv Firm 10110700

CONCEPT ENGINEERS
TX. FIRM REGISTRATION # F-04417
Structures for the whole community

PRELIMINARY
NOT FOR CONSTRUCTION,
BIDDING, OR PERMIT PURPOSES.
FOR REVIEW ONLY.
DAVID MOORE.
TEXAS LICENSE NO. 139405

Date: 05/08/26

CITY OF HOUSTON
DEPARTMENT OF PUBLIC WORKS AND ENGINEERING

LIFT STATION RENEWAL AND REPLACEMENT FY 2023
MARKET STREET NO.2 LIFT STATION
STAIR DETAILS

WBS NUMBER	FOR CITY OF HOUSTON USE ONLY
R-000267-0179-4	
DRAWING SCALE	
AS NOTED	
CITY OF HOUSTON PM	
NAWARAJ PANTA, P.E.	
DWG. NO. MKT-S-12	SHEET NO. 198 OF 361

IDS JOB No. 0057-085-00

FILE PATH: G:\COMMERCIAL PROJECTS\24137 - Lift Station Rehab & Construction\STRUCTURAL\vr_DWGS\XREF\24137-TBlock.dwg

PLOTTED: 5/12/2026 8:27 PM

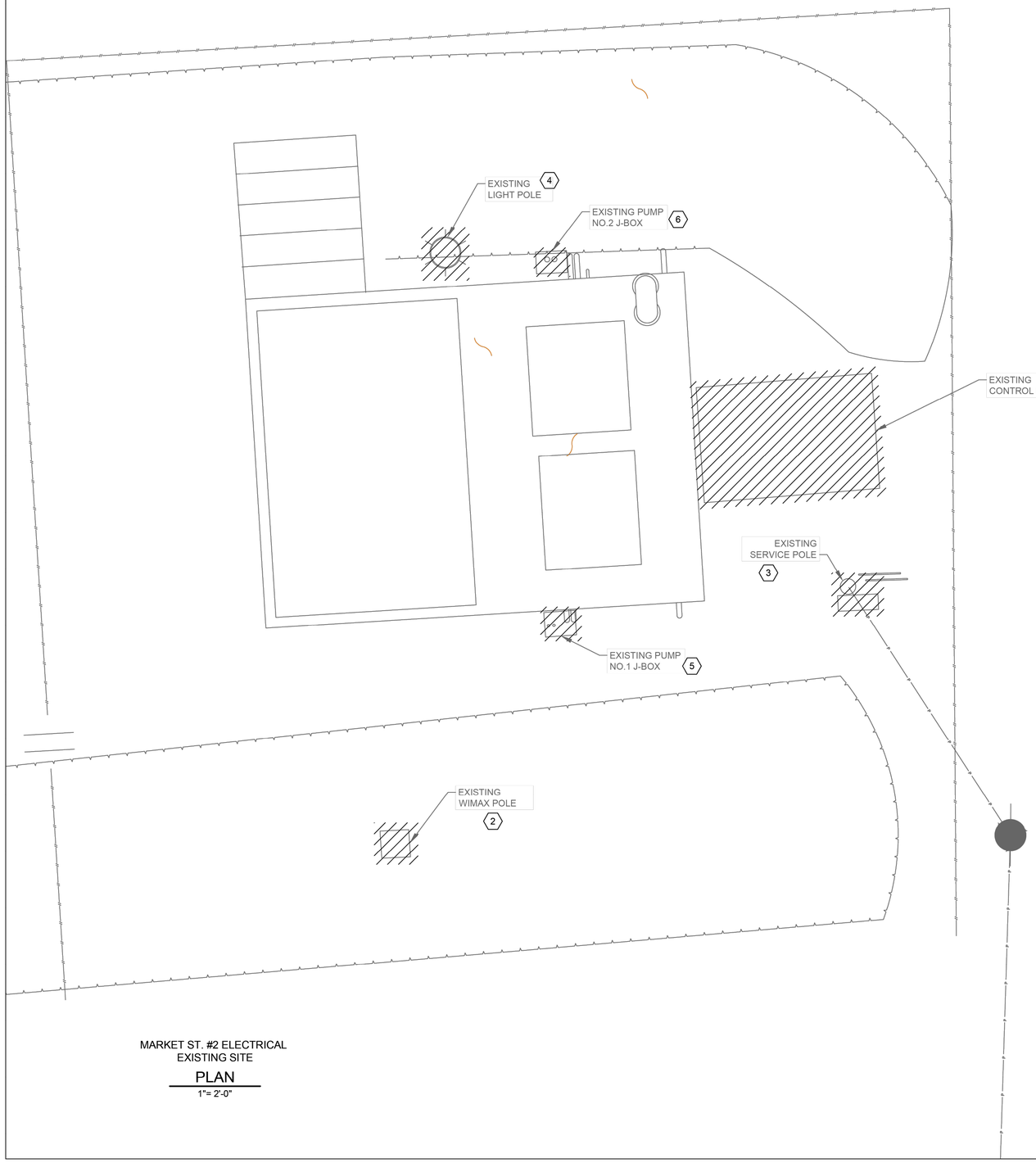

MARKET ST. #2 ELECTRICAL
EXISTING SITE
PLAN
1"= 2'-0"



EXISTING CONTROL PANEL

PHOTOGRAPH A 1
NTS -

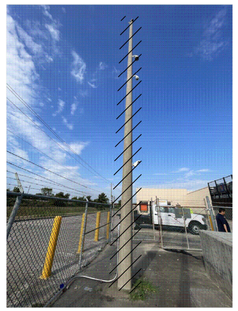

EXISTING WIMAX POLE

PHOTOGRAPH B 2
NTS -

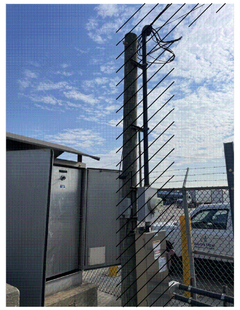

EXISTING SERVICE POLE

PHOTOGRAPH C 3
NTS -



EXISTING LIGHT POLE

PHOTOGRAPH D 4
NTS -

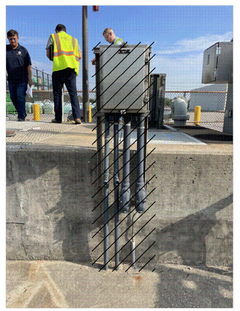

EXISTING PUMP NO.1 J-BOX

PHOTOGRAPH E 5
NTS -



EXISTING PUMP NO.2 J-BOX

PHOTOGRAPH F 6
NTS -

SCALE: 1"= 2'

0' 2 4' 6'

NO.	DATE	REVISION	APP.

NOTES BY SYMBOL "#":

1. EXISTING CONTROL PANEL TO BE DEMOLISHED AND REMOVED.
2. EXISTING WIMAX POLE TO BE DEMOLISHED AND REMOVED.\
3. EXISTING SERVICE POLE TO BE DEMOLISHED AND REMOVED.
4. EXISTING LIGHT POLE TO BE DEMOLISHED AND REMOVED.
5. EXISTING PUMP NO.1 J-BOX TO BE DEMOLISHED AND REMOVED.
6. EXISTING PUMP NO.2 J-BOX TO BE DEMOLISHED AND REMOVED.

GENERAL NOTES:

1. THE OWNER HAS THE RIGHT OF FIRST REFUSAL TO THE EQUIPMENT BEING REMOVED. CONTRACTOR SHALL DELIVER THE EQUIPMENT WHICH OWNER WISHES TO KEEP AT LOCATION DESIGNATED BY THE OWNER. SEE SPECIFICATIONS SECTION 16060 FOR ELECTRICAL DEMOLITION.

FOR INTERIM REVIEW
ONLY NOT INTENDED FOR
PERMIT, BIDDING OR
CONSTRUCTION PURPOSES.
ENGINEER:
HOSS FOROUZAN
P.E. SERIAL NO.77748
05/18/2026

GAI
Gupta & Associates, Inc.
CONSULTING ENGINEERING
Registration No. F-2593
302 Dennis St.,
Houston, Texas 77006
Tel: 713-636-2936
Fax: 713-636-2987
email: hforouzan@gaiconsulting.com

IDS Engineering Group
13430 NW. Freeway
Suite 700
Houston, Tx. 77040
713.462.3178
TxEng Firm 2726
TxSurv Firm 10110700

CITY OF HOUSTON
HOUSTON PUBLIC WORKS

LIFT STATION RENEWAL
AND REPLACEMENT FY 2023

MARKET ST. NO.2 LIFT STATION ELECTRICAL DEMOLITION SITE PLAN

WBS NUMBER	FOR CITY OF HOUSTON USE ONLY
R-000267-0179-4	
DRAWING SCALE	
HORIZ:1"=2'-0" VERT1"=2'-0"	
CITY OF HOUSTON PM	
NAWARAJ PANTA, P.E.	
SHEET NO. 199 OF 361	

DWG. NO. MKT-E-01

IDS JOB No. 0057-085-00

FILE PATH: O:\H8108_Lift Station Rehabilitation And Reconstruction (IDS)\6 Drawings\Electrical\Working\Market St. #2\H8108_MKT-E-01.dwg

PLOTTED: 5/12/2026 8:27 PM

FILE PATH: O:\H8108_Lift Station Rehabilitation And Reconstruction (IDS)\6 Drawings\Electrical\Working\Market St. #2\H8108_MKT-E-02.dwg

SCALE: 1"= 4'

0' 4' 8' 12'

NOTES:

1. THE ELECTRICAL INSTALLATION IN THE WET WELL SHALL BE EXPLOSION PROOF, IN ACCORDANCE WITH THE NATIONAL ELECTRICAL CODE FOR CLASS I, DIVISION 1 LOCATIONS.
2. YARD LIGHT CONTROLLED BY LIGHTING SWITCH.
3. TYPE "B" FIXTURE TO BE INSTALLED ON THE POLE PROVIDING WIRES FOR THE "B" LIGHT.
4. INSIDE WETWELL RATED NEMA CLASS , DIV. 1, OUTSIDE ABOVE GROUND, AROUND WETWELL RATED CLASS 1, DIV. 2 ACCORDING TO NFPA 820.
5. GROUNDING LOOP SHALL BE BURIED 30" BELOW FINISHED GRADE.
6. #4/0 BARE COPPER GROUND TO BE BONDED TO PLATFORM STRUCTURAL STEEL.
7. #4/0 BARE COPPER GROUND TO BE BONDED TO HANDRAIL.
8. #2/0 BARE COPPER GROUND TO BE BONDED TO FENCE POST.

NO.	DATE	REVISION	APP.

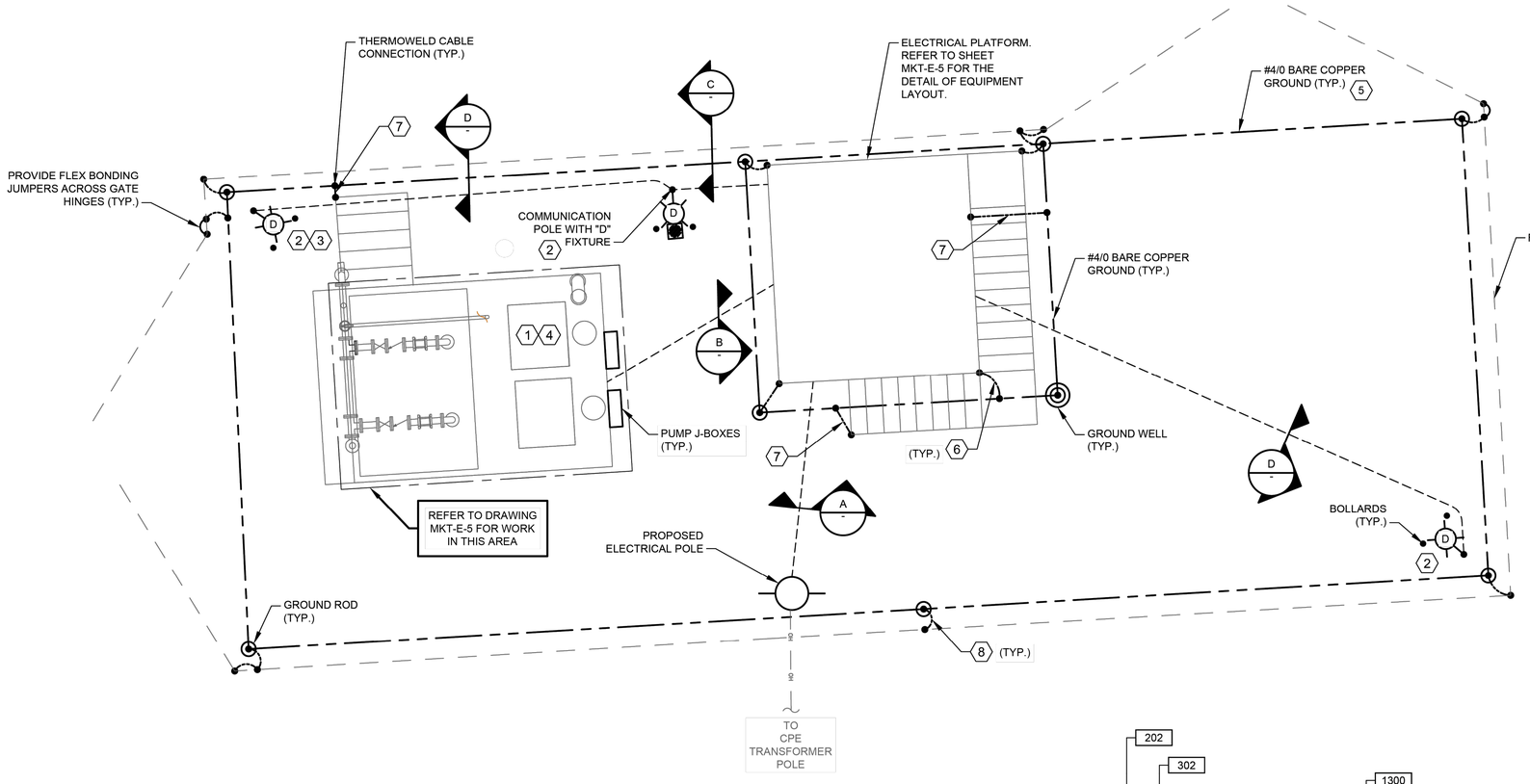

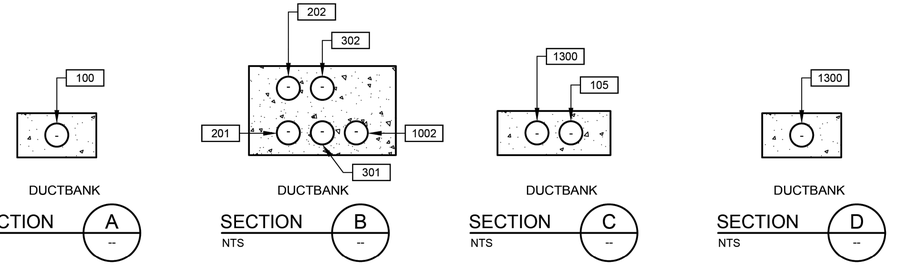

DUCTBANK SECTION A NTS

DUCTBANK SECTION B NTS

DUCTBANK SECTION C NTS

DUCTBANK SECTION D NTS

MARKET ST. #2 ELECTRICAL PROPOSED SITE PLAN

1"= 4'-0"

FOR INTERIM REVIEW ONLY NOT INTENDED FOR PERMIT, BIDDING OR CONSTRUCTION PURPOSES.
ENGINEER:
HOSS FOROUZAN
P.E. SERIAL NO.77748
05/18/2026

GAI
Gupta & Associates, Inc.
CONSULTING ENGINEERING
Registration No. F-2593
302 Dennis St.,
Houston, Texas 77006
Tel: 713-636-2936
Fax: 713-636-2987
email: hforouzan@gaiconsulting.com

IDS Engineering Group
13430 NW. Freeway
Suite 700
Houston, Tx. 77040
713.462.3178
TxEng Firm 2726
TxSurv Firm 10110700

CITY OF HOUSTON
HOUSTON PUBLIC WORKS

LIFT STATION RENEWAL AND REPLACEMENT FY 2023

MARKET ST. NO.2 LIFT STATION PROPOSED ELECTRICAL SITE PLAN

WBS NUMBER	FOR CITY OF HOUSTON USE ONLY
R-000267-0179-4	
DRAWING SCALE	
HORIZ:1"=4'-0" VERT1"=4'-0"	
CITY OF HOUSTON PM	
NAWARAJ PANTA, P.E.	
DWG. NO. MKT-E-02	SHEET NO. 200 OF 361

IDS JOB No. 0057-085-00

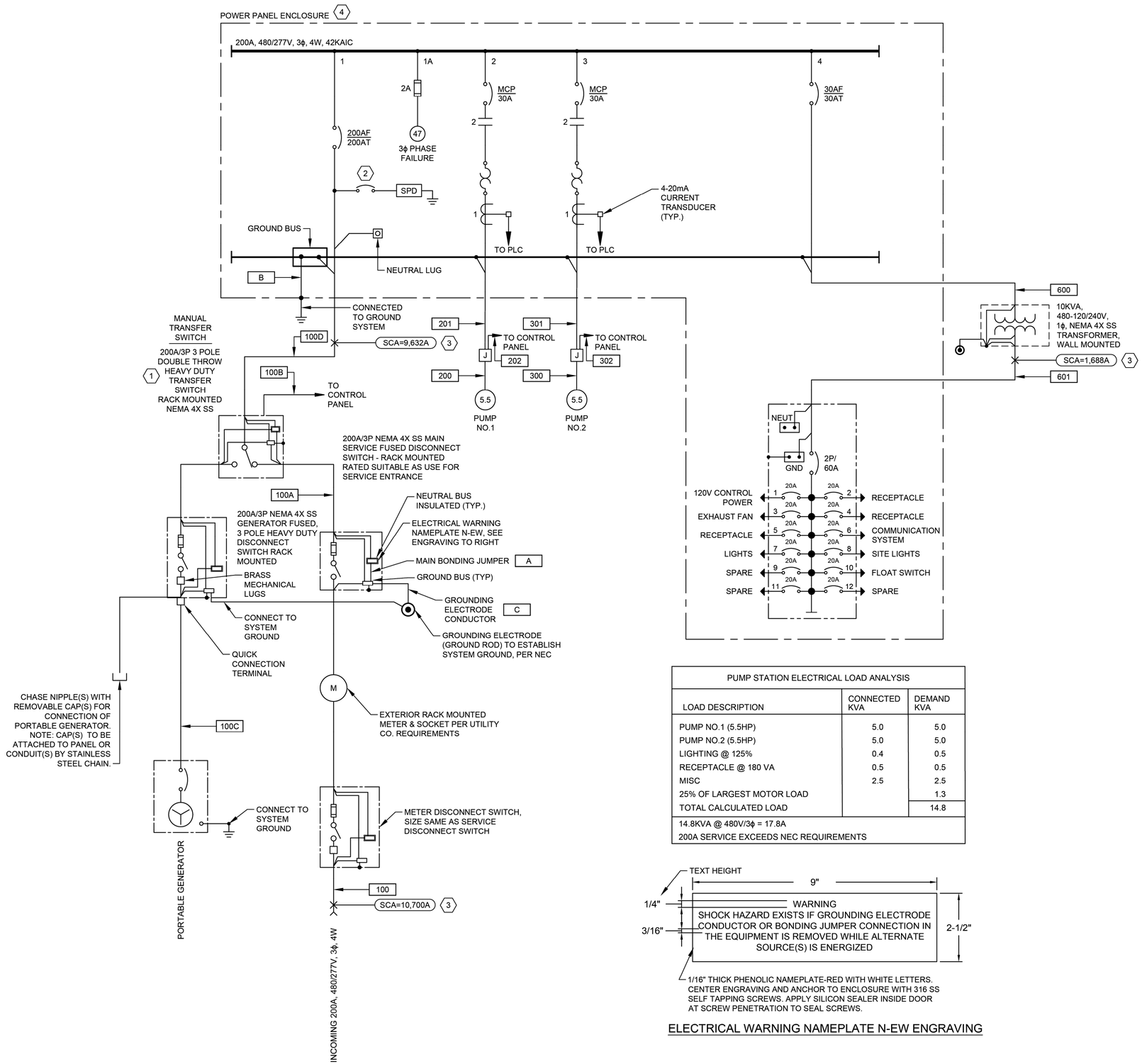

PUMP STATION ELECTRICAL LOAD ANALYSIS		
LOAD DESCRIPTION	CONNECTED KVA	DEMAND KVA
PUMP NO.1 (5.5HP)	5.0	5.0
PUMP NO.2 (5.5HP)	5.0	5.0
LIGHTING @ 125%	0.4	0.5
RECEPTACLE @ 180 VA	0.5	0.5
MISC	2.5	2.5
25% OF LARGEST MOTOR LOAD		1.3
TOTAL CALCULATED LOAD		14.8
14.8KVA @ 480V/3ϕ = 17.8A		
200A SERVICE EXCEEDS NEC REQUIREMENTS		

1/16" THICK PHENOLIC NAMEPLATE-RED WITH WHITE LETTERS. CENTER ENGRAVING AND ANCHOR TO ENCLOSURE WITH 316 SS SELF TAPPING SCREWS. APPLY SILICON SEALER INSIDE DOOR AT SCREW PENETRATION TO SEAL SCREWS.

ELECTRICAL WARNING NAMEPLATE N-EW ENGRAVING

NOTES:

1. PROVIDE A NORMALLY OPEN (NO) AUXILIARY CONTACT ON BOTH ON POSITIONS.
2. PROVIDE BREAKER ACCORDING TO MANUFACTURER'S REQUIREMENTS.
3. POINT TO POINT METHOD IS USED FOR SHORT CIRCUIT CURRENT CALCULATION.
4. CONTRACTOR SHALL PROVIDE A PERMANENTLY AFFIXED LABEL (2" X 3"0 SHOWING THE AVAILABLE FAULT CURRENT AND CALCULATION DATE. THE LABEL SHALL BE BLUE LETTERING ON A CONTRASTING BACKGROUND.
5. THE INSULATION TYPES OF ALL ELECTRICAL CONDUCTORS USED IN THE PROJECT HAVE BEEN SPECIFIED IN ELECTRICAL SPECIFICATIONS (16120, 16121, AND 16122). THE TYPES OF CONDUITS USED IN THE PROJECT HAS BEEN SPECIFIED IN ELECTRICAL SPECIFICATIONS 16111.

GENERAL NOTES:

1. NO ELECTRICAL MATERIAL, APPARATUS, DEVICES, APPLIANCES, FIXTURES, OR EQUIPMENT SHALL BE SOLD OR INSTALLED IN THE CITY UNLESS THEY ARE IN CONFORMANCE WITH THE PROVISIONS OF SECTION 508 CITY OF HOUSTON ELECTRICAL CODE, THE LAWS OF THE STATE OF TEXAS AND ANY APPLICABLE RULES AND REGULATIONS ISSUED UNDER THE AUTHORITY OF THE STATE STATUES. THE MAKER'S NAME, TRADEMARK, OR OTHER IDENTIFICATION SYMBOL SHALL BE PLACED ON ALL ELECTRICAL MATERIALS, APPARATUS, DEVICES, APPLIANCES, FIXTURES, AND EQUIPMENT USED OR INSTALLED UNDER THE PROVISIONS OF THIS CODE. ALL ELECTRICAL MATERIALS AND EQUIPMENT SHALL BE LISTED AND LABELED FOR THE INTENDED USE AND SHALL BE INCLUDED IN A LIST PUBLISHED BY AN APPROVAL AGENCY.

NO.	DATE	REVISION	APP.

FOR INTERIM REVIEW ONLY NOT INTENDED FOR PERMIT, BIDDING OR CONSTRUCTION PURPOSES.
ENGINEER:
HOSS FOROUZAN
P.E. SERIAL NO.77748
05/18/2026

GAI
Gupta & Associates, Inc.
CONSULTING ENGINEERING
Registration No. F-2593
302 Dennis St.,
Houston, Texas 77006
Tel: 713-636-2936
Fax: 713-636-2987
email: hforouzan@gaiconsulting.com

IDS Engineering Group
13430 NW. Freeway
Suite 700
Houston, Tx. 77040
713.462.3178
TxEng Firm 2726
TxSurv Firm 10110700

CITY OF HOUSTON
HOUSTON PUBLIC WORKS

LIFT STATION RENEWAL AND REPLACEMENT FY 2023

MARKET ST. NO.2 LIFT STATION SINGLE LINE DIAGRAM

WBS NUMBER	FOR CITY OF HOUSTON USE ONLY
R-000267-0179-4	
DRAWING SCALE	
HORIZ: NONE VERT: NONE	
CITY OF HOUSTON PM	
NAWARAJ PANTA, P.E.	
SHEET NO. 201 OF 361	

DWG. NO. MKT-E-03

IDS JOB No. 0057-085-00

PLOTTED: 5/12/2026 8:27 PM

FILE PATH: O:\H8108_Lift Station Rehabilitation And Reconstruction (IDS)\6 Drawings\Electrical\Working\Market St. #2\H8108_MKT-E-03.dwg

PLOTTED: 5/12/2026 8:27 PM

FILE PATH: O:\H8108_Lift Station Rehabilitation And Reconstruction (IDS)\6 Drawings\Electrical\Working\Market St. #2\H8108_MKT-E-04.dwg

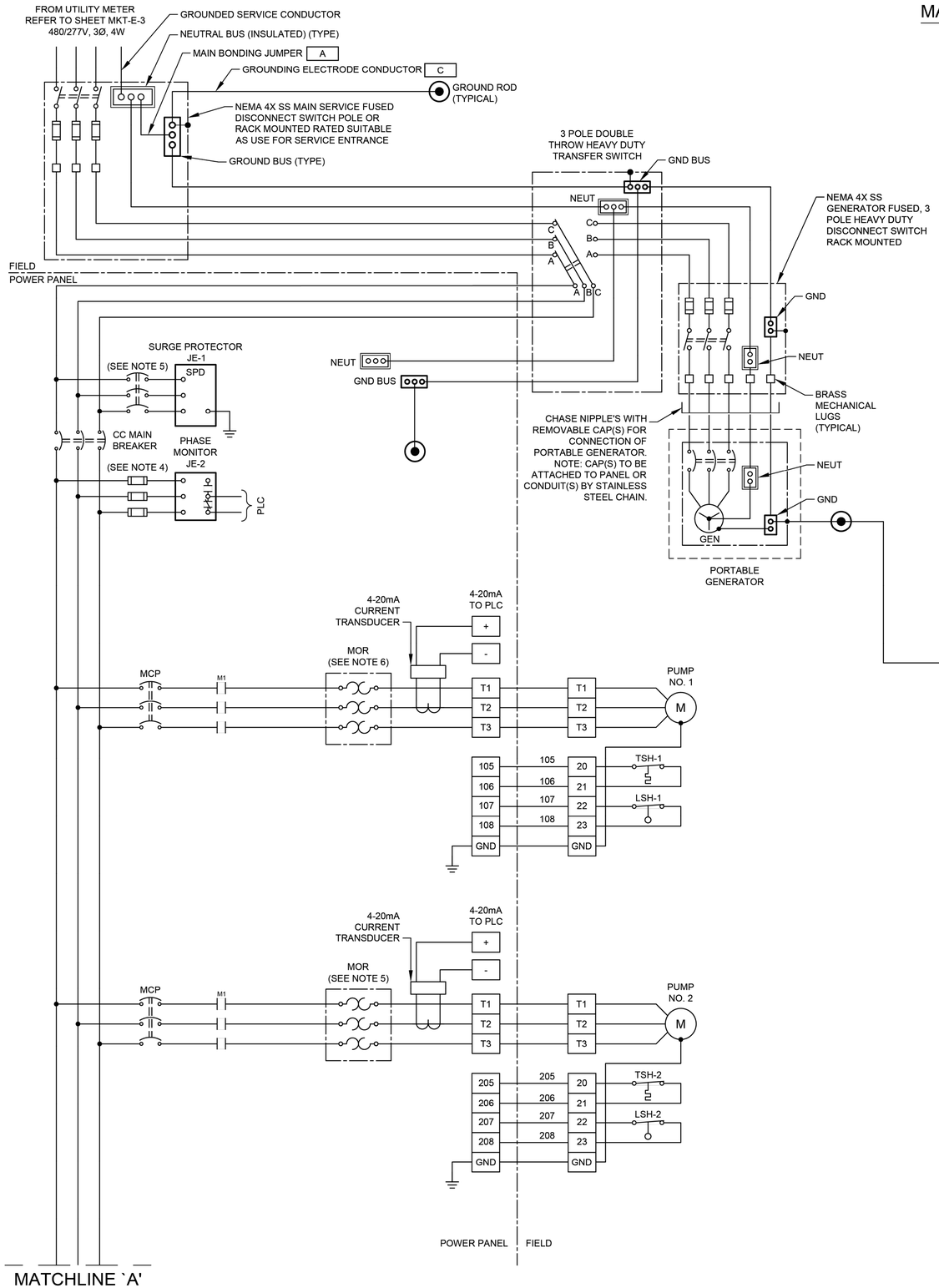

MATCHLINE `A'

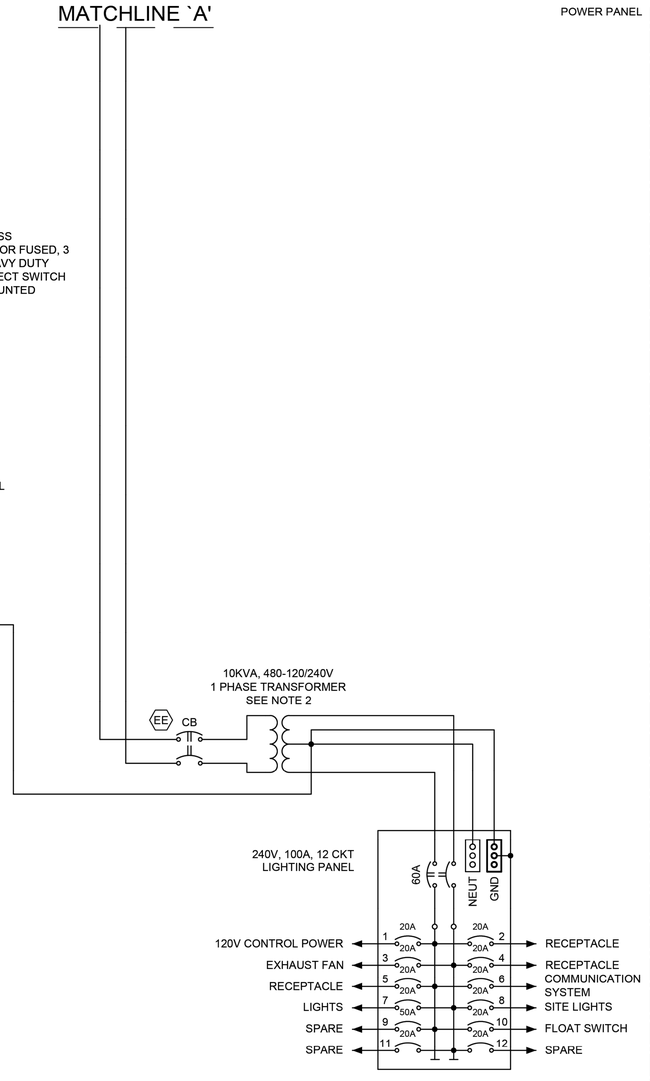

POWER WIRING
DIAGRAM
NTS

NOTES:

1. UNLESS OTHERWISE INDICATED, ALL DEVICES WITHOUT FURTHER DESIGNATION ARE LOCATED AT THE CONTROL PANEL.
2. CONTRACTOR TO REVISE DWG. BASED ON MANUFACTURE AND SIZE.
3. CONTRACTOR SHALL TERMINATE POWER & CONTROL WIRES PER MANUFACTURER'S REQUIREMENTS.
4. PROVIDE FUSE SIZE ACCORDING TO MANUFACTURER'S REQUIREMENTS.
5. PROVIDE BREAKER SIZE ACCORDING TO MANUFACTURER'S REQUIREMENTS.
6. THE COMBINATION OF CT AND MOTOR OVERLOAD RELAY IF REQUIRED.

NO.	DATE	REVISION	APP.

FOR INTERIM REVIEW
ONLY NOT INTENDED FOR
PERMIT, BIDDING OR
CONSTRUCTION PURPOSES.
ENGINEER:
HOSS FOROUZAN
P.E. SERIAL NO.77748
05/18/2026

GAI
Gupta & Associates, Inc.
CONSULTING ENGINEERING
Registration No. F-2593
302 Dennis St.,
Houston, Texas 77006
Tel: 713-636-2936
Fax: 713-636-2987
email: hforouzan@gaiconsulting.com

IDS Engineering Group
13430 NW. Freeway
Suite 700
Houston, Tx. 77040
713.462.3178
TxEng Firm 2726
TxSurv Firm 10110700

CITY OF HOUSTON
HOUSTON PUBLIC WORKS

LIFT STATION RENEWAL AND REPLACEMENT FY 2023

MARKET ST. NO.2 LIFT STATION THREE-LINE DIAGRAM

WBS NUMBER	FOR CITY OF HOUSTON USE ONLY
R-000267-0179-4	
DRAWING SCALE	
HORIZ: NONE VERT: NONE	
CITY OF HOUSTON PM	
NAWARAJ PANTA, P.E.	
SHEET NO. 202 OF 361	

DWG. NO. MKT-E-04

IDS JOB No. 0057-085-00

PLOTTED: 5/12/2026 8:27 PM

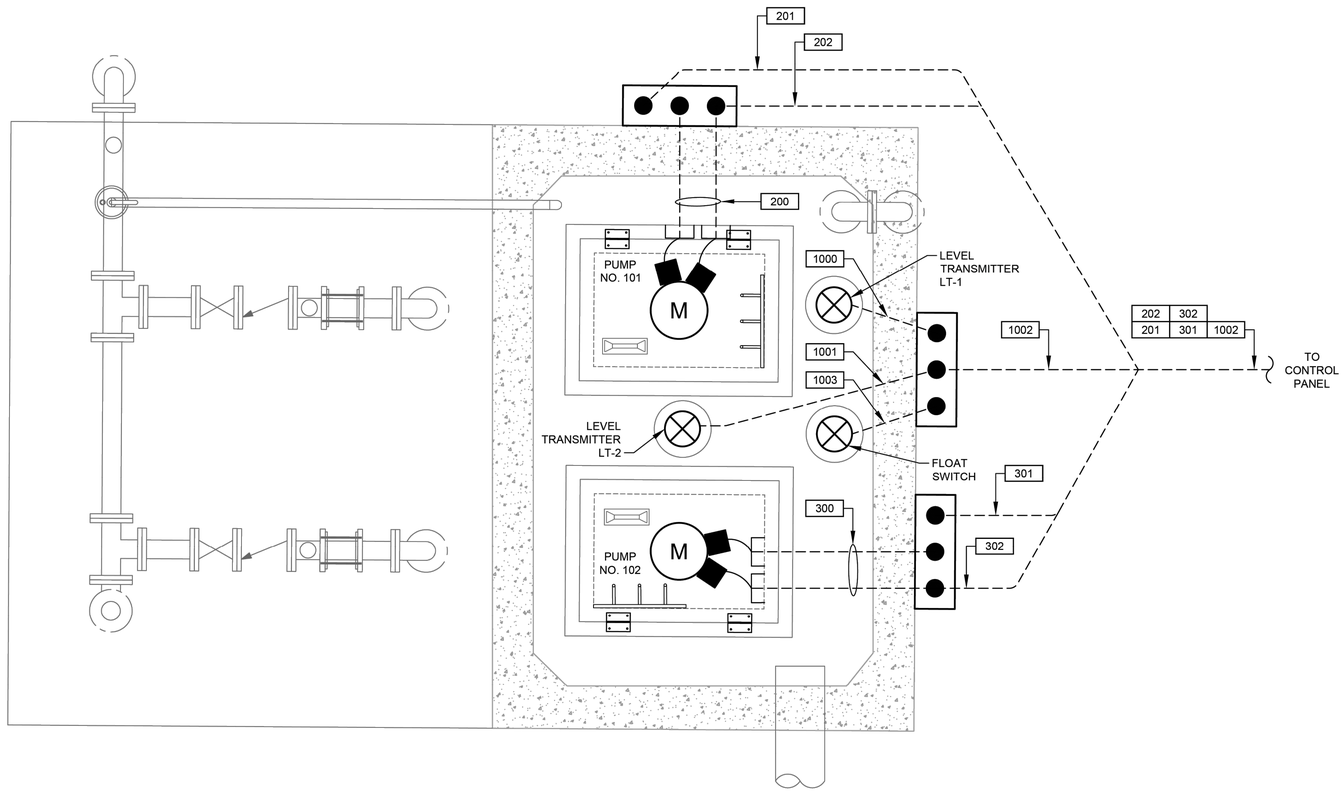

MARKET ST. NO.2 LIFT STATION
ELECTRICAL ENLARGED

PLAN

3/4"= 1'-0"

6" 0 1 2

SCALE: 3/4" = 1'-0"

NO.	DATE	REVISION	APP.

FOR INTERIM REVIEW
ONLY NOT INTENDED FOR
PERMIT, BIDDING OR
CONSTRUCTION PURPOSES.
ENGINEER:
HOSS FOROUZAN
P.E. SERIAL NO.77748
05/18/2026

GAI
Gupta & Associates, Inc.
CONSULTING ENGINEERING
Registration No. F-2593
302 Dennis St.,
Houston, Texas 77006
Tel: 713-636-2936
Fax: 713-636-2987
email: hforouzan@gaiconsulting.com

IDS Engineering Group
13430 NW. Freeway
Suite 700
Houston, Tx. 77040
713.462.3178
TxEng Firm 2726
TxSurv Firm 10110700

CITY OF HOUSTON
HOUSTON PUBLIC WORKS

LIFT STATION RENEWAL
AND REPLACEMENT FY 2023

MARKET ST. NO.2 LIFT STATION ELECTRICAL ENLARGED PLAN

WBS NUMBER	FOR CITY OF HOUSTON USE ONLY
R-000267-0179-4	
DRAWING SCALE	
HORIZ 3/4"=1'-0" VERT 3/4"=1'-0"	
CITY OF HOUSTON PM	
NAWARAJ PANTA, P.E.	
SHEET NO. 203 OF 361	

DWG. NO.
MKT-E-05

IDS JOB No. 0057-085-00

FILE PATH: O:\H8108_Lift Station Rehabilitation And Reconstruction (IDS)\6 Drawings\Electrical\Working\Market St. #2\H8108_MKT-E-05.dwg

PLOTTED: 5/12/2026 8:27 PM

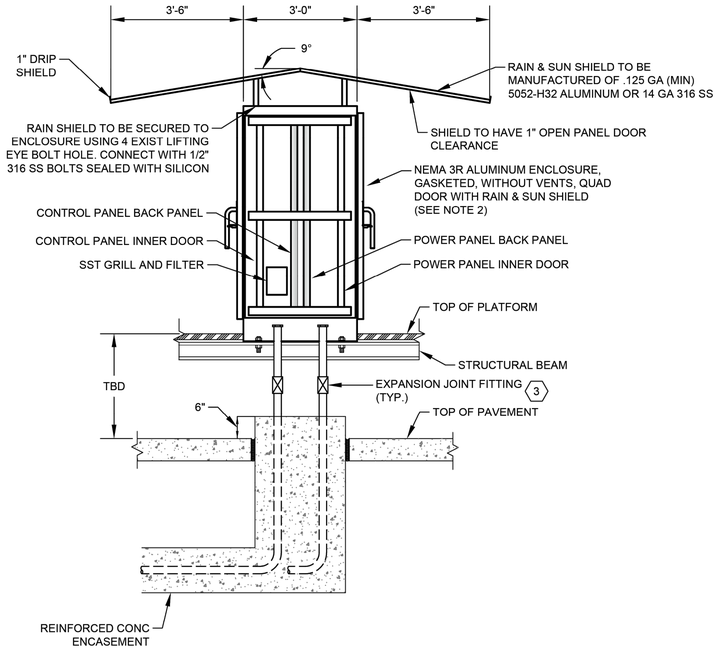

CONTROL CABINET ENCLOSURE WITH PLATFORM

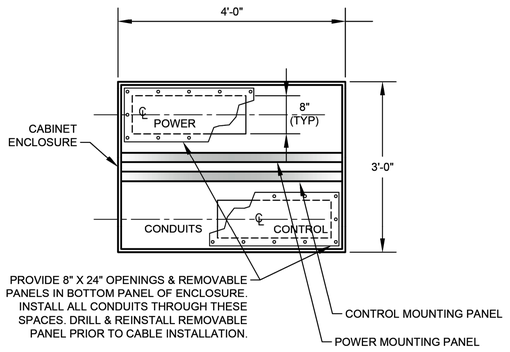

SECTION 2 / NTS -

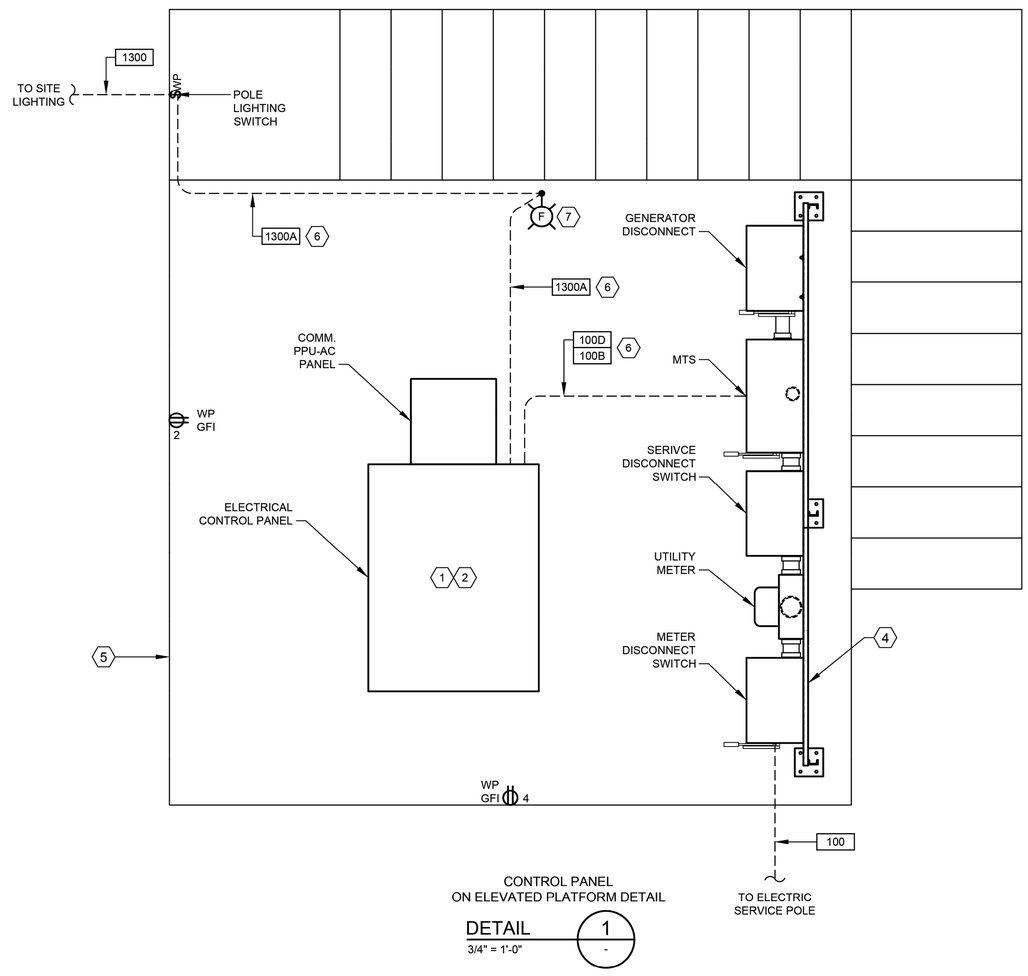

CONTROL PANEL ON ELEVATED PLATFORM DETAIL

DETAIL 1 / 3/4" = 1'-0" -

NOTES:

1. SEE SHEET MKT-I-4 FOR EQUIPMENT SCHEDULE.
2. REFER TO SPEC 13325-8 FOR PANEL DIMENSIONS.
3. EXPANSION JOINT FITTINGS AS REQUIRED.
4. REFER TO SERVICE RACK FOR DETAIL.
5. REFER TO STRUCTURAL DRAWINGS FOR PLATFORM DETAILS.
6. CONDUIT TO BE MOUNTED BELOW PLATFORM GRATING.
7. DUSK TO DAWN PHOTOCELL CONTROL.

NO.	DATE	REVISION	APP.

FOR INTERIM REVIEW
ONLY NOT INTENDED FOR
PERMIT, BIDDING OR
CONSTRUCTION PURPOSES.
ENGINEER:
HOSS FOROUZAN
P.E. SERIAL NO.77748
05/18/2026

GAI
Gupta & Associates, Inc.
CONSULTING ENGINEERING
Registration No. F-2593
302 Dennis St.,
Houston, Texas 77006
Tel: 713-636-2936
Fax: 713-636-2987
email: hforouzan@gaiconsulting.com

IDS Engineering Group
13430 NW. Freeway
Suite 700
Houston, Tx. 77040
713.462.3178
TxEng Firm 2726
TxSurv Firm 10110700

CITY OF HOUSTON
HOUSTON PUBLIC WORKS

LIFT STATION RENEWAL
AND REPLACEMENT FY 2023

MARKET ST. NO.2 LIFT STA. CNTL. CAB. ENCLO. DETL.

WBS NUMBER	FOR CITY OF HOUSTON USE ONLY
R-000267-0179-4	
DRAWING SCALE	
HORIZ: AS NOTED VERT: AS NOTED	
CITY OF HOUSTON PM	
NAWARAJ PANTA, P.E.	
DWG. NO. MKT-E-06	SHEET NO. 204 OF 361

IDS JOB No. 0057-085-00

FILE PATH: O:\H8108_Lift Station Rehabilitation And Reconstruction (IDS)\6 Drawings\Electrical\Working\Market St. #2\H8108_MKT-E-06.dwg

PLOTTED: 5/12/2026 8:27 PM

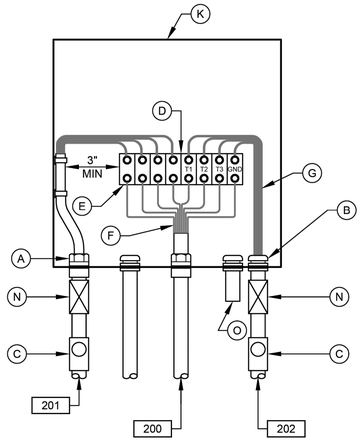

PUMP NO.1
JUNCTION BOX

DETAIL 3
NTS
(SEE NOTE 7)

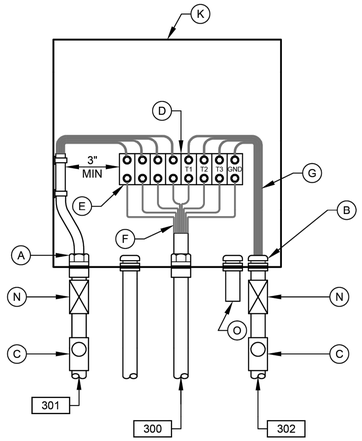

PUMP NO.2
JUNCTION BOX

DETAIL 4
NTS
(SEE NOTE 7)

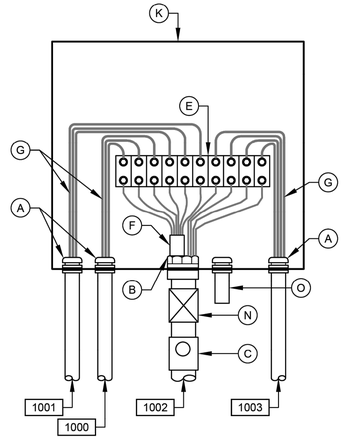

LEVEL TRANSMITTER
JUNCTION BOX

DETAIL 5
NTS
(SEE NOTE 7)

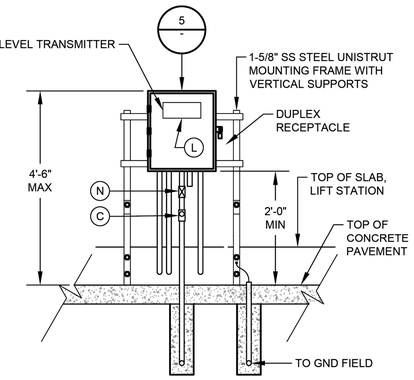

DETAIL 6
NTS
(SEE NOTE 9 & 12)

TYP SIDE VIEW FOR DETAIL 1, 2, & 6

(SEE NOTE 10)

DETAIL 1
NTS
(SEE NOTE 9 & 12)

DETAIL 2
NTS
(SEE NOTE 9 & 12)

JUNCTION BOX EQUIPMENT SCHEDULE

- A - OZ GEDNEY CSBE SEAL
- B - WATERTIGHT CONDUIT HUB WITH INSULATED BUSHING
- C - CLASS I, DIV 1, EXPLOSION PROOF SEAL INSTALLED PER NEC DIV 501
- D - POWER TERMINAL BLOCK W/SCREW DOWN BOX LUGS
- E - CONTROL TERM BLOCK W/SCREW DOWN BOX LUGS
- F - MULTI-CONDUCTOR CABLE, REMOVE OUTER JACKET AS SHOWN
- G - WIRING AS SCHEDULED
- H - NOT USED.
- I - NOT USED.
- J - NOT USED
- K - NEMA 6P STAINLESS STEEL JUNCTION BOX WITH GASKETED FRONT COVER, SINGLE QUARTER TURN, OIL-TIGHT LATCH AND PADLOCKING PROVISIONS, MINIMUM SIZE: 12"W X 16"H X 6"D
- L - NAMEPLATE, SEE SPECIFICATIONES (SEE NAMEPLATE SCHEDULE)
- M - NOT USED.
- N - EXPANSION FITTING
- O - DRAIN VENT

NOTES:

1. NAMEPLATES SHALL BE MOUNTED TO JUNCTION BOXES USING 316 STAINLESS STEEL HARDWARE.
2. MAINTAIN MINIMUM SEPARATION REQUIRED UNDER NEC ARTICLE 504, BETWEEN INTRINSICALLY SAFE CONTROL WIRING AND NON INTRINSICALLY SAFE MOTOR FEEDER WIRING.
3. UNLESS OTHERWISE NOTED, ALL EXTERIOR EXPOSED CONDUITS SHALL BE PVC COATED ALUMINUM.
4. UNLESS OTHERWISE NOTED, ALL NUTS, BOLTS, SCREWS WASHERS, ETC SHALL BE TYPE 316 STAINLESS STEEL.
5. ALL UNDERGROUND CONDUITS TO BE ENCASED IN REINFORCED CONCRETE DUCTBANK.
6. PROVIDE ANTI-CORROSIVE SPRAY ON ANY BARE METAL PARTS OR EXPOSED WIRE.
7. SEE WIRING SCHEMATICS FOR TERMINALS AND WIRE NUMBERS.
8. ANY CONDUIT REQUIRING A CSBE SEAL, SHALL BE A MINIMUM SIZE OF 2 1/2" PER CABLE.
9. DETAIL SHOWN MAY BE MODIFIED PER SITE SITUATION.
10. COORDINATE WITH WASTE WATER OPERATIONS ELECTRICAL ORGANIZATION FOR THE OPENING OF JUNCTION BOXES TO THE SIDE OF WET WELL IF REQUIRED DURING CONSTRUCTION.
11. THE ENCLOSURES WITH ELECTRICAL CIRCUITS SHALL BE A MINIMUM OF 5 FEET FROM ANY CLASSIFIED AREA, OTHERWISE EXPLOSION PROOF TYPE ENCLOSURES SHALL BE USED.

NO.	DATE	REVISION	APP.

FOR INTERIM REVIEW ONLY NOT INTENDED FOR PERMIT, BIDDING OR CONSTRUCTION PURPOSES.
ENGINEER:
HOSS FOROUZAN
P.E. SERIAL NO.77748
05/18/2026

GAI
Gupta & Associates, Inc.
CONSULTING ENGINEERING
Registration No. F-2593
302 Dennis St.,
Houston, Texas 77006
Tel: 713-636-2936
Fax: 713-636-2987
email: hforouzan@gaiconsulting.com

IDS Engineering Group
13430 NW. Freeway
Suite 700
Houston, Tx. 77040
713.462.3178
TxEng Firm 2726
TxSurv Firm 10110700

CITY OF HOUSTON
HOUSTON PUBLIC WORKS

LIFT STATION RENEWAL AND REPLACEMENT FY 2023

MARKET ST. NO.2 LIFT STATION JUNCTION BOX DETAIL

WBS NUMBER	FOR CITY OF HOUSTON USE ONLY
R-000267-0179-4	
DRAWING SCALE	
HORIZ: NTS VERT: NTS	
CITY OF HOUSTON PM	
NAWARAJ PANTA, P.E.	
SHEET NO. 205 OF 361	

DWG. NO. MKT-E-07

IDS JOB No. 0057-085-00

FILE PATH: O:\H8108_Lift Station Rehabilitation And Reconstruction (IDS)\6 Drawings\Electrical\Working\Market St. #2\H8108_MKT-E-07.dwg

PLOTTED: 5/12/2026 8:27 PM

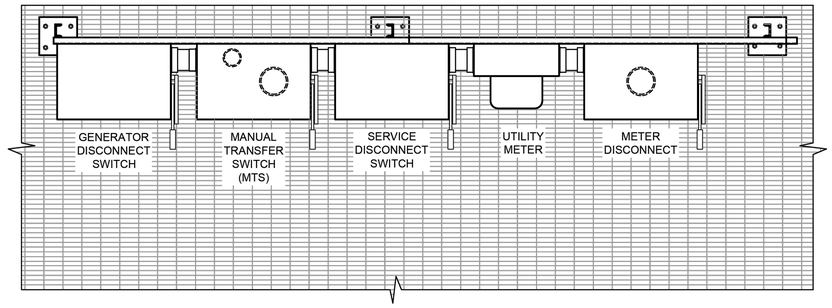

PLAN

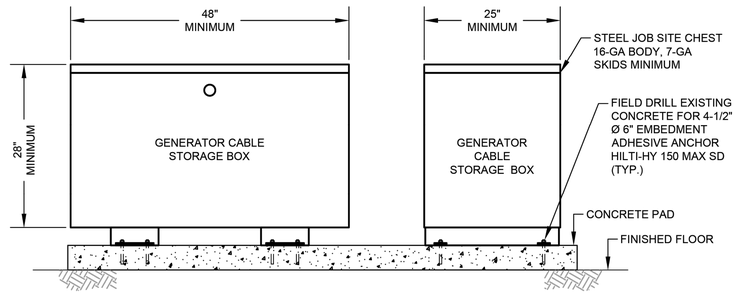

GENERATOR CABLE STORAGE BOX SIDE VIEW

DETAIL 20
NTS. -

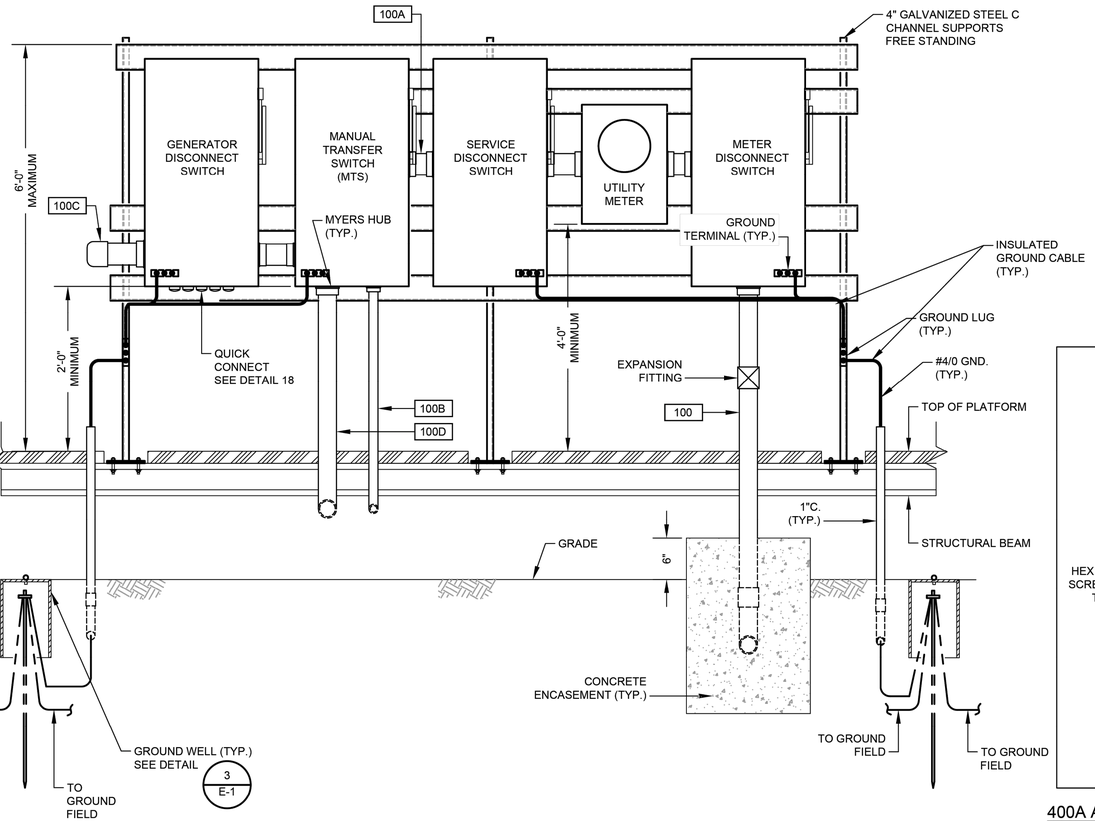

SERVICE MOUNTING RACK

DETAIL 1
NTS. -

ALLOWABLE DEVICE AMPACITY CHART DLO RHW-2 CAM-LOK CONNECTOR CABLE		
CABLE SIZE AWG	AMPS	CABLE LENGTH
#1	220	65 FEET
4/0	400	65 FEET

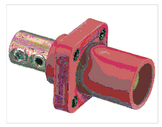

QUICK CONNECT FOR GENERATOR

PHOTOGRAPH 1
NTS. -



QUICK CONNECT FOR GENERATOR

PHOTOGRAPH 2
NTS. -

NOTES:

1. CHASE NIPPLE(S) WITH REMOVABLE CAP(S) FOR CONNECTION OF PORTABLE GENERATOR. NOTE: CAP(S) TO BE ATTACHED TO PANEL OR CONDUIT(S) BY STAINLESS STEEL CHAIN.
2. T.O.C DEFINED AS TOP OF PAVEMENT OR TOP OF PANEL ENCLOSURE PEDESTAL WHICHEVER IS HIGHER. (SEE NOTE B).
3. PROVIDE CENTER BOLLARD WHEN SPACE BETWEEN OUTSIDE BOLLARDS IS GREATER THEN 4'-0".
4. CONTRACTOR SHALL COORDINATE THE LOCATION OF STORAGE BOX WITH COH WASTEWATER MAINTENANCE STAFF DURING CONSTRUCTION.

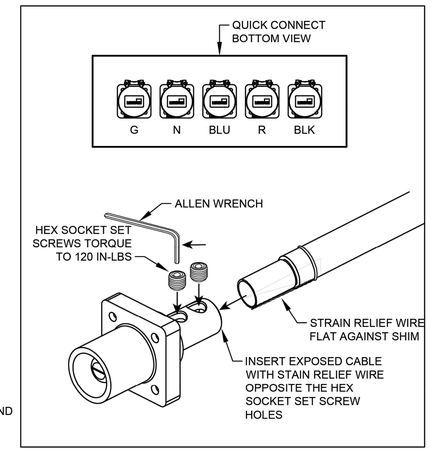

400A AND LESS FEMALE PLUG CABLE TERMINATION

DETAIL 18
NTS. -

REFER TO PHOTO NO.1

NOTES:

1. CONTRACTOR TO INSTALL CONNECTORS AT BOTH ENDS OF CABLE.

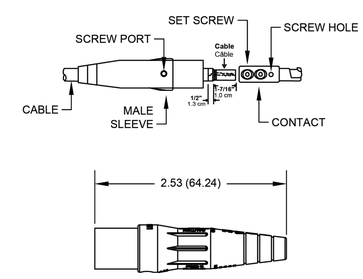

400A AND LESS MALE PLUG CABLE TERMINATION

DETAIL 19
NTS. -

REFER TO PHOTO NO.2

FOR INTERIM REVIEW ONLY NOT INTENDED FOR PERMIT, BIDDING OR CONSTRUCTION PURPOSES.
ENGINEER:
HOSS FOROUZAN
P.E. SERIAL NO.77748
05/18/2026

GAI
Gupta & Associates, Inc.
CONSULTING ENGINEERING
Registration No. F-2593
302 Dennis St.,
Houston, Texas 77006
Tel: 713-636-2936
Fax: 713-636-2987
email: hforouzan@gaiconsulting.com

IDS Engineering Group
13430 NW. Freeway
Suite 700
Houston, Tx. 77040
713.462.3178
TxEng Firm 2726
TxSurv Firm 10110700

CITY OF HOUSTON
HOUSTON PUBLIC WORKS

LIFT STATION RENEWAL AND REPLACEMENT FY 2023

MARKET ST. NO.2 LIFT STATION SERVICE RACK DETAIL

WBS NUMBER	FOR CITY OF HOUSTON USE ONLY
R-000267-0179-4	
DRAWING SCALE	
HORIZ: NTS VERT: NTS	
CITY OF HOUSTON PM	
NAWARAJ PANTA, P.E.	
DWG. NO. MKT-E-08	SHEET NO. 206 OF 361

NO.	DATE	REVISION	APP.

IDS JOB No. 0057-085-00

FILE PATH: O:\H8108_Lift Station Rehabilitation And Reconstruction (IDS)\6 Drawings\Electrical\Working\Market St. #2\H8108_MKT-E-08.dwg

PLOTTED: 5/12/2026 8:27 PM

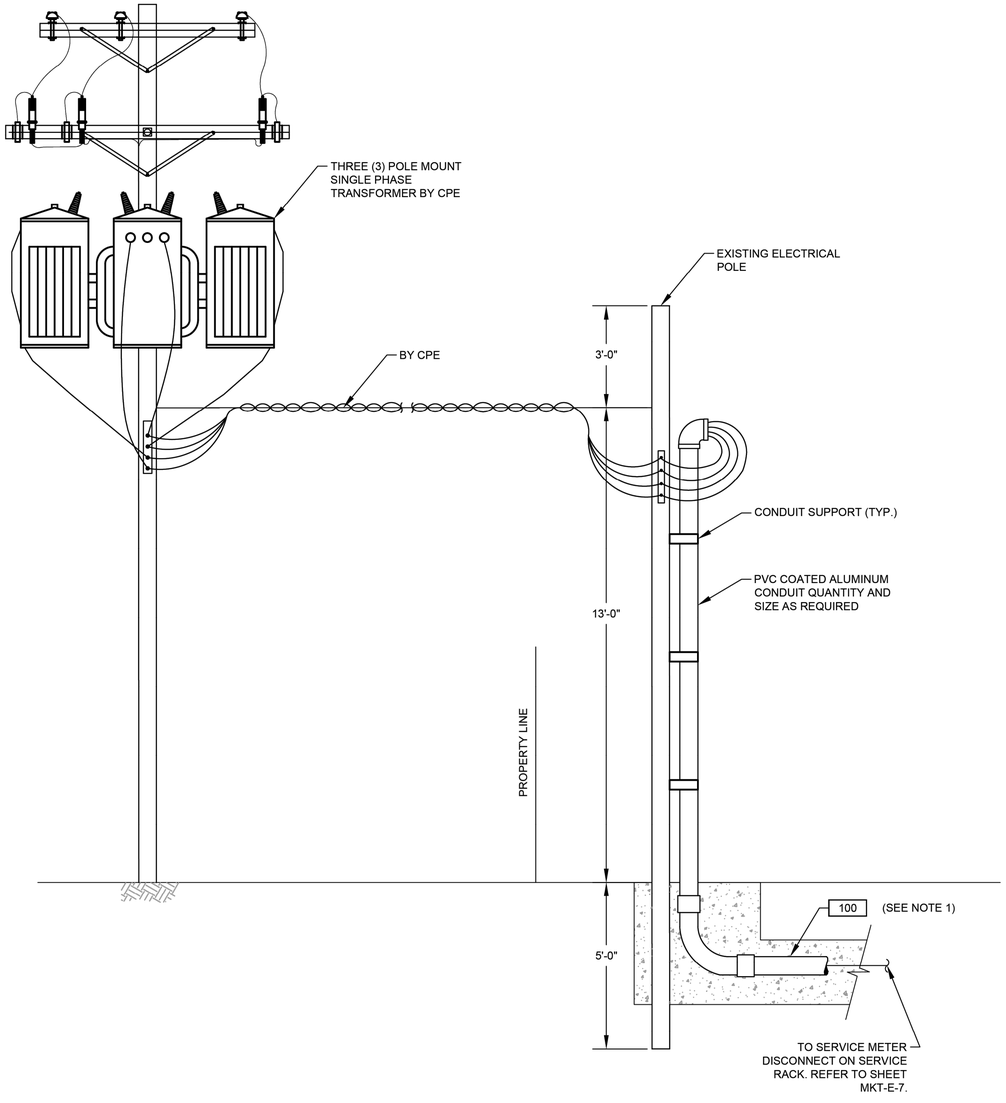

ELECTRICAL SERVICE ENTRANCE

DETAIL 1
NTS. -

NOTES:

1. ELECTRICAL SERVICE FEEDER PROVIDED AND INSTALLED BY ELECTRICAL CONTRACTOR. COORDINATE WITH CPE FOR THE REQUIREMENTS OF THE INSTALLATION.

NO.	DATE	REVISION	APP.

FOR INTERIM REVIEW
ONLY NOT INTENDED FOR
PERMIT, BIDDING OR
CONSTRUCTION PURPOSES.
ENGINEER:
HOSS FOROUZAN
P.E. SERIAL NO.77748
05/18/2026

GAI
Gupta & Associates, Inc.
CONSULTING ENGINEERING
Registration No. F-2593
302 Dennis St.,
Houston, Texas 77006
Tel: 713-636-2936
Fax: 713-636-2987
email: hforouzan@gaiconsulting.com

IDS Engineering Group
13430 NW. Freeway
Suite 700
Houston, Tx. 77040
713.462.3178
TxEng Firm 2726
TxSurv Firm 10110700

CITY OF HOUSTON
HOUSTON PUBLIC WORKS

LIFT STATION RENEWAL
AND REPLACEMENT FY 2023

MARKET ST. NO.2 LIFT STATION SERVICE POLE DETAIL

WBS NUMBER	FOR CITY OF HOUSTON USE ONLY
R-000267-0179-4	
DRAWING SCALE	
HORIZ: NTS VERT: NTS	
CITY OF HOUSTON PM	
NAWARAJ PANTA, P.E.	
SHEET NO. 207 OF 361	

DWG. NO. MKT-E-09

IDS JOB No. 0057-085-00

FILE PATH: O:\H8108_Lift Station Rehabilitation And Reconstruction (IDS)\6 Drawings\Electrical\Working\Market St. #2\H8108_MKT-E-09.dwg

	DESCRIPTION	SERVICE		ROUTING			CONDUIT & WIRE SIZE
		VOLTAGE	AMPS OR HP	FROM	TO	VIA	
A	MAIN BONDING JUMPER	--	--	MAIN FUSED DISCONNECT NEUTRAL	MAIN FUSED DISCONNECT GROUND	--	#4 CU GND.
B	EQUIPMENT BONDING JUMPER	--	--	MCC/POWER PANEL ENCLOSURE	POWER/CONTROL PANEL & EQUIPMENT	--	#4 CU GND.
C	GROUNDED ELECTRODE CONDUCTOR	--	--	GROUNDING ELECTRODE	MAIN SERVICE FUSED DISCONNECT GROUNDING	--	#4 CU GND.
100	SERVICE ENTRANCE	480V	200A	UTILITY POWER SERVICE	METER DISCONNECT	--	4 #3/0 AWG., #4 GND., 2-1/2" C.
100A	UTILITY POWER ENTRANCE	480V	200A	SERVICE DISCONNECT SWITCH	MTS	--	4 #3/0 AWG., #4 GND., 2-1/2" C.
100B	NORMAL/EMERGENCY POWER STATUS	24VDC	--	MTS	CONTROL POWER	--	4#14 AWG., #14 GND., 3/4"C.
100C	EMERGENCY POWER	480V	200A	GENERATOR DISCONNECT	PORTABLE GENERATOR	CAPPED CONDUIT	--
100D	MCC POWER	480V	--	MTS	CONTROL PANEL	--	4 #3/0 AWG., #4 GND., 2-1/2" C.
101	GROUND ELECTRODE CONDUCTOR	--	--	MCC ENCLOSURE	GROUND FIELD	--	#4 CU GND.
104	GROUND ELECTRODE CONDUCTOR	--	--	CONTROL PANEL	GROUND FIELD	--	#6 CU GND.
105	COMMUNICATION	--	--	COMMUNICATION POLE	CONTROL PANEL	--	1-1/2"C. CAT 5E
200	PUMP NO. 1 POWER	480V	5.8 HP	PUMP NO. 1	PUMP NO. 1 JUNCTION BOX	--	MANUFACTURER CABLE IN 2-1/2"C.
201	PUMP NO. 1 POWER AND CONTROLS	480V	5.8 HP	PUMP NO. 1 JUNCTION BOX	PUMP STARTER	--	3#10, #10 GND., 1-1/2"C.
202	PUMP NO. 1 CONTROLS	120V	--	PUMP NO. 1 JUNCTION BOX	CONTROL PANEL	--	4#14, #14 GND., 1"C.
300	PUMP NO. 2 POWER	480V	5.8 HP	PUMP NO. 2	PUMP NO. 2 JUNCTION BOX	--	MANUFACTURER CABLE IN 2-1/2"C.
301	PUMP NO. 2 POWER AND CONTROLS	480V	5.8 HP	PUMP NO. 2 JUNCTION BOX	PUMP STARTER	--	3#10, #10 GND., 1-1/2"C.
302	PUMP NO. 2 CONTROLS	120V	--	PUMP NO. 2 JUNCTION BOX	CONTROL PANEL	--	4#14, #14 GND., 1"C.
600	LIGHTING PANEL FEEDER	480V	30A	MOTOR CONTROL CENTER	LIGHTING TRANSFORMER	--	2#10, #10 GND., 3/4"C.
601	LIGHTING PANEL GROUND	--	--	LIGHTING PANEL	GROUND FIELD	--	#6 GND., 1"C.
602	LIGHTING PANEL FEEDER	120/240V	60A	LIGHTING TRANSFORMER	LIGHTING PANEL	--	3#4, #6 GND., 1-1/4" C.
1000	LEVEL TRANSMITTER	24VDC	--	TRANSMITTER JUNCTION BOX	TRANSMITTER JUNCTION BOX	--	MANUFACTURER'S CABLE IN 2-1/2"C
1001	LEVEL TRANSMITTER	24VDC	--	TRANSMITTER JUNCTION BOX	TRANSMITTER JUNCTION BOX	--	MANUFACTURER'S CABLE IN 2-1/2"C
1002	COMBINED LEVEL TRANSMITTERS & FLOAT SWITCH	24VDC	--	CONTROL PANEL	TRANSMITTER JUNCTION BOX	--	2-TRI, 4#14, 2" C.
1003	WELL FLOAT SWITCHES	24VDC	--	TRANSMITTER JUNCTION BOX	FLOAT SWITCH NO.1 & NO.2	--	MANUFACTURER'S CABLE IN 2-1/2"C
1100	120VAC FOR RECEPTACLE	-	--	LIGHTING PANEL	RECEPTACLE ON PLATFORM	--	2#12, #12G, 1" C.
1200	120VAC FOR RECEPTACLE	-	--	LIGHTING PANEL	RECEPTACLE ON PLATFORM	--	2#12, #12G, 1" C.
1300	SITE LIGHTING	120V	--	SITE LIGHTING SWITCH	SITE LIGHTING	--	2#12 AWG., #12 GND., 1"C.
1300A	SITE LIGHTING CONTROLS	120V	--	LIGHTING PANEL	SITE LIGHTING SWITCH	--	2#12 AWG., #12 GND., 3/4"C.

NO.	DATE	REVISION	APP.

FOR INTERIM REVIEW
ONLY NOT INTENDED FOR
PERMIT, BIDDING OR
CONSTRUCTION PURPOSES.
ENGINEER:
HOSS FOROUZAN
P.E. SERIAL NO.77748
05/18/2026

GAI
Gupta & Associates, Inc.
CONSULTING ENGINEERING
Registration No. F-2593

302 Dennis St.,
Houston, Texas 77006
Tel: 713-636-2936
Fax: 713-636-2987
email: hforouzan@gaiconsulting.com

IDS Engineering Group
13430 NW. Freeway
Suite 700
Houston, Tx. 77040
713.462.3178
TxEng Firm 2726
TxSurv Firm 10110700

CITY OF HOUSTON
HOUSTON PUBLIC WORKS

LIFT STATION RENEWAL AND REPLACEMENT FY 2023

MARKET ST. NO.2 LIFT STATION CONDUIT SCHEDULE

WBS NUMBER	FOR CITY OF HOUSTON USE ONLY
R-000267-0179-4	
DRAWING SCALE	
HORIZ: NONE VERT: NONE	
CITY OF HOUSTON PM	
NAWARAJ PANTA, P.E.	
SHEET NO. 208 OF 361	

DWG. NO.
MKT-E-10

IDS JOB No. 0057-085-00

PLOTTED: 5/12/2026 8:27 PM

FILE PATH: O:\H8108_Lift Station Rehabilitation And Reconstruction (IDS)\6 Drawings\Electrical\Working\Market St. #2\H8108_MKT-E-10.dwg

PLOTTED: 5/12/2026 8:56 PM

HMI

INFLUENT PUMP NO. 1: SEAL FAIL ALARM MA 1; MOTOR OVERLOAD ALARM MO 1; MOTOR CURRENT II 1; HIGH TEMP ALARM TH 1; IN HAND HI 1; IN AUTO IA 1; ON/OFF YFS 1; START/STOP YCS 1

INFLUENT PUMP NO. 2: SEAL FAIL ALARM MA 2; MOTOR OVERLOAD ALARM MO 2; MOTOR CURRENT II 2; HIGH TEMP ALARM TH 2; IN HAND HI 2; IN AUTO IA 2; ON/OFF YFS 2; START/STOP YCS 2

ALARMS RESET RE 1

PRIMARY PLC — FLOAT HIGH-HIGH WETWELL LEVEL LAHH 1A

BACKUP PLC — PUMP NO. 1 START/STOP YCS 1A; PUMP NO. 2 START/STOP YCS 2A

CONTROL PANEL PLC

CONTROL PANEL

480V

INFLUENT PUMP NO. 1 — H/O/A; RUN

INFLUENT PUMP NO. 2 — H/O/A; RUN

PRIMARY PLC

BACKUP PLC

INFLUENT PUMP CONTROL PANEL

ALARMS RESET — OIT

TO SHEET MKT-I-2

MKT-I-2

MKT-I-2

WET WELL

LT 1

LE 1

LT 2

LE 2

LSH 1A

TSH 1A

M

HIGHHIGH LEVEL FLOAT SWITCH FS2

LSH 2A

TSH 2A

M

INFLUENT DISCHARGE

HIGH LEVEL FLOAT SWITCH FS1

NO.	DATE	REVISION	APP.

FOR INTERIM REVIEW ONLY NOT INTENDED FOR PERMIT, BIDDING OR CONSTRUCTION PURPOSES.
ENGINEER:
HOSS FOROUZAN
P.E. SERIAL NO.77748
05/18/2026

GAI
Gupta & Associates, Inc.
CONSULTING ENGINEERING
Registration No. F-2593
302 Dennis St.,
Houston, Texas 77006
Tel: 713-636-2936
Fax: 713-636-2987
email: hforouzan@gaiconsulting.com

IDS Engineering Group
13430 NW. Freeway
Suite 700
Houston, Tx. 77040
713.462.3178
TxEng Firm 2726
TxSurv Firm 10110700

CITY OF HOUSTON
HOUSTON PUBLIC WORKS

LIFT STATION RENEWAL AND REPLACEMENT FY 2023

MARKET ST. NO.2 LIFT STATION P&ID DIAGRAM–I

WBS NUMBER	FOR CITY OF HOUSTON USE ONLY
R–000267–0179–4	
DRAWING SCALE	
HORIZ: NONE VERT: NONE	
CITY OF HOUSTON PM	
NAWARAJ PANTA, P.E.	
SHEET NO. 209 OF 361	

DWG. NO. MKT–I–01

IDS JOB No. 0057-085-00

FILE PATH: O:\H8108_Lift Station Rehabilitation And Reconstruction (IDS)\6 Drawings\Instrumentation And Control\Working\Market St. #2\H8108_MKT–I–01.dwg

PLOTTED: 5/12/2026 8:56 PM

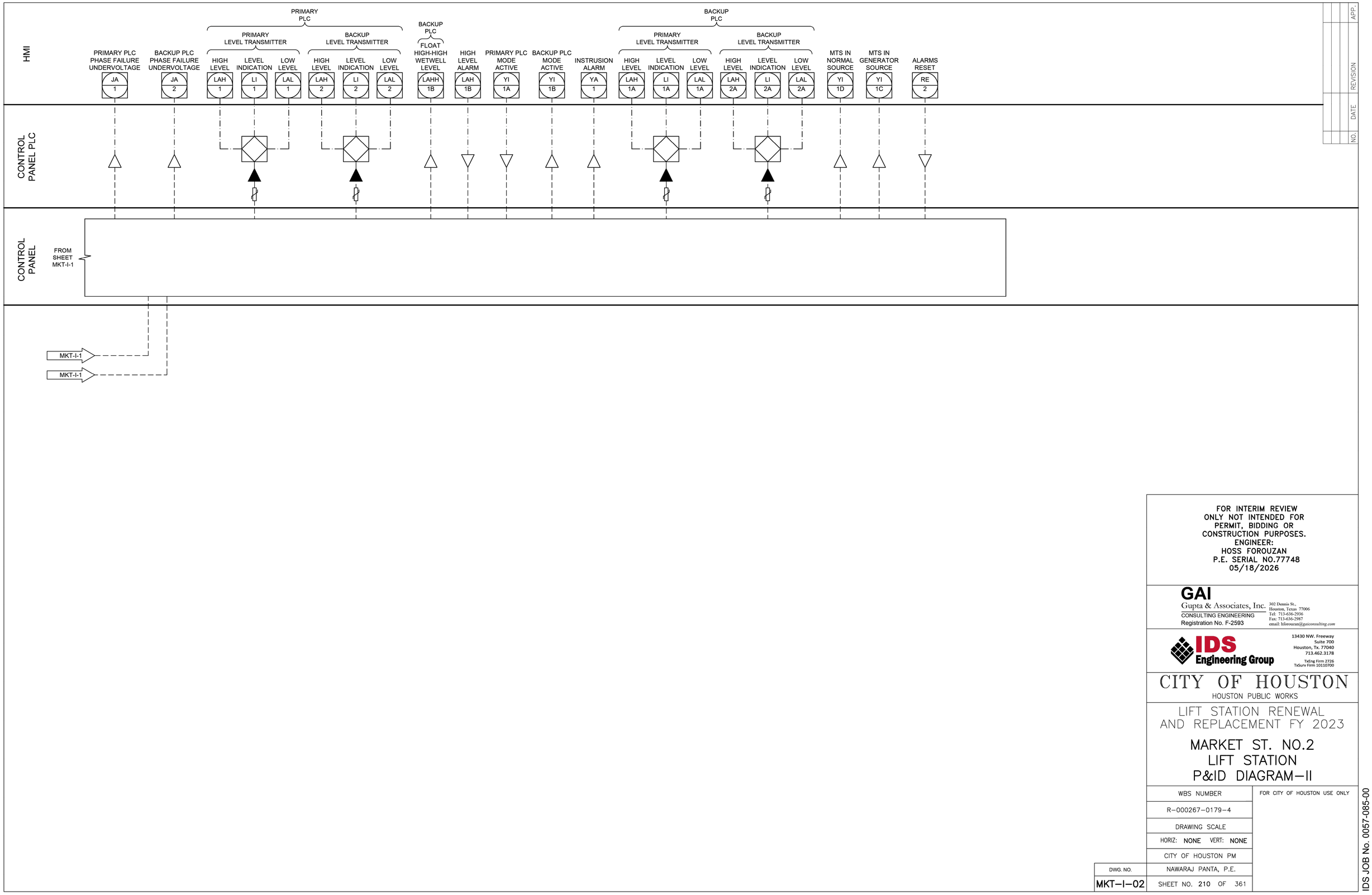

NO.	DATE	REVISION	APP.

FOR INTERIM REVIEW
ONLY NOT INTENDED FOR
PERMIT, BIDDING OR
CONSTRUCTION PURPOSES.
ENGINEER:
HOSS FOROUZAN
P.E. SERIAL NO.77748
05/18/2026

GAI
Gupta & Associates, Inc.
CONSULTING ENGINEERING
Registration No. F-2593
302 Dennis St.,
Houston, Texas 77006
Tel: 713-636-2936
Fax: 713-636-2987
email: hforouzan@gaiconsulting.com

IDS Engineering Group
13430 NW. Freeway
Suite 700
Houston, Tx. 77040
713.462.3178
TxEng Firm 2726
TxSurv Firm 10110700

CITY OF HOUSTON
HOUSTON PUBLIC WORKS

LIFT STATION RENEWAL AND REPLACEMENT FY 2023

MARKET ST. NO.2 LIFT STATION P&ID DIAGRAM–II

WBS NUMBER	FOR CITY OF HOUSTON USE ONLY
R–000267–0179–4	
DRAWING SCALE	
HORIZ: NONE VERT: NONE	
CITY OF HOUSTON PM	
NAWARAJ PANTA, P.E.	
SHEET NO. 210 OF 361	

DWG. NO. MKT–I–02

IDS JOB No. 0057-085-00

FILE PATH: O:\H8108_Lift Station Rehabilitation And Reconstruction (IDS)\6 Drawings\Instrumentation And Control\Working\Market St. #2\H8108_MKT–I–02.dwg

PLOTTED: 5/12/2026 8:56 PM

FILE PATH: O:\H8108_Lift Station Rehabilitation And Reconstruction (IDS)\6 Drawings\Instrumentation And Control\Working\Market St. #2\H8108_MKT-I-03.dwg

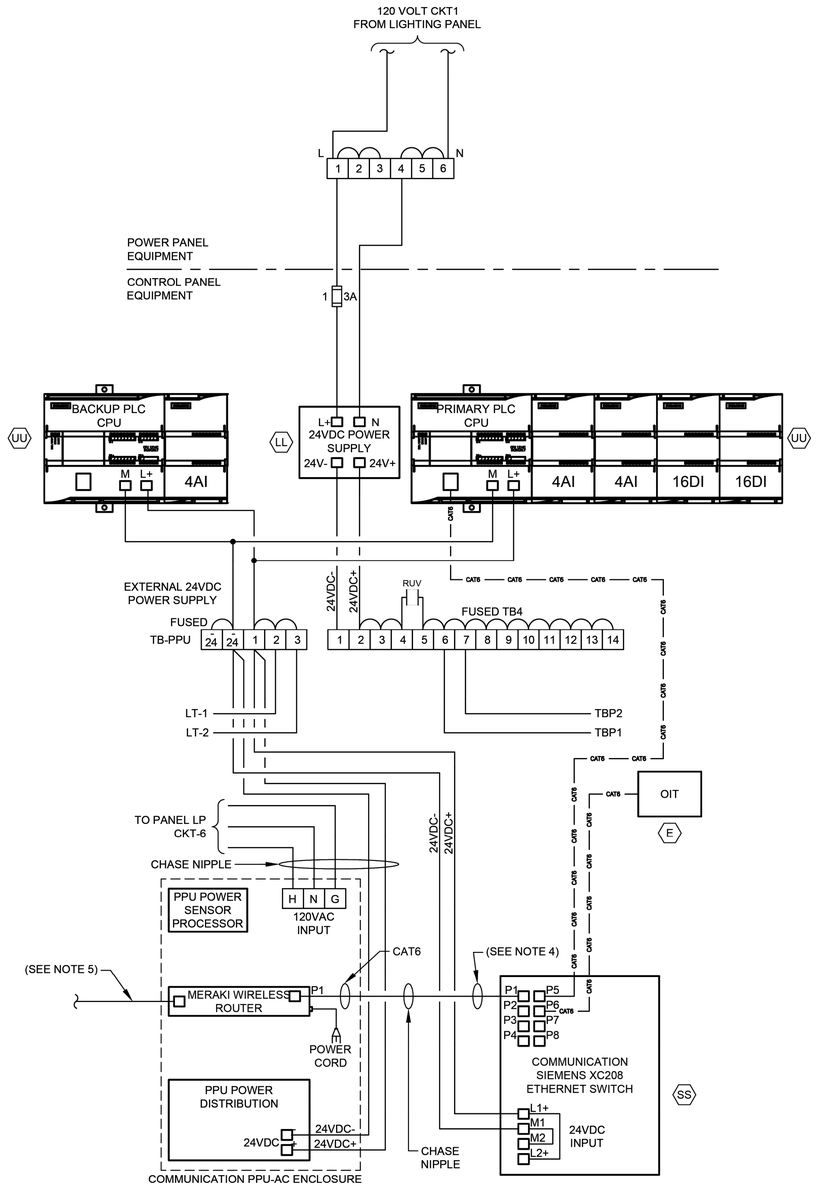

CONTROL POWER & COMMUNICATIONS WIRING

DIAGRAM

NTS

(SEE NOTE 2 & 6)

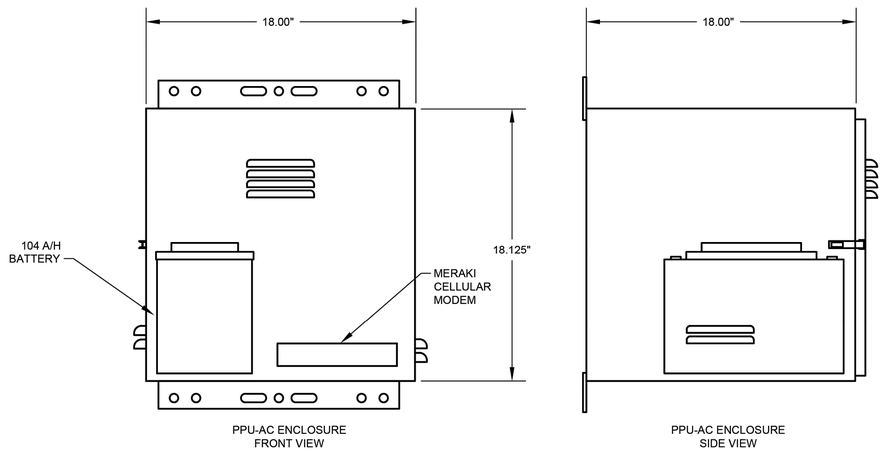

PPU-AC ENCLOSURE FRONT VIEW

PPU-AC ENCLOSURE SIDE VIEW

PPU-AC CONTROL ENCLOSURE

ELEVATION

NTS

(SEE NOTE 7)

NOTES:

1. FOR DESCRIPTION AND RATINGS OF ITEMS INDICATED WITH ITEM TAG, SEE DEVICE RATINGS SCHEDULE.
2. REFER TO SPEC SECTION 16120 FOR CONDUCTOR COLOR CODE.
3. THE PLC POWER SUPPLY SHALL FEED THE 24VDC I/O.
4. CAT6 ETHERNET CABLE FOR MERAKI CELLULAR ROUTER (P1).
5. CAT6 POE CABLE TO RADIO.
6. COMMUNICATION PPU-AC & SCADA SHALL BE PROVIDED BY CONTRACTOR INCLUDING TO RUN CONDUITS & WIRES.
7. COORDINATE WITH VENDOR TO PROVIDE PROPER VENTILATION WHERE APPLICABLE.

GENERAL NOTES:

1. NO ELECTRICAL MATERIAL, APPARATUS, DEVICES, APPLIANCES, FIXTURES, OR EQUIPMENT SHALL BE SOLD OR INSTALLED IN THE CITY UNLESS THEY ARE IN CONFORMANCE WITH THE PROVISIONS OF SECTION 508 CITY OF HOUSTON ELECTRICAL CODE, THE LAWS OF THE STATE OF TEXAS AND ANY APPLICABLE RULES AND REGULATIONS ISSUED UNDER THE AUTHORITY OF THE STATE STATUES. THE MAKER'S NAME, TRADEMARK, OR OTHER IDENTIFICATION SYMBOL SHALL BE PLACED ON ALL ELECTRICAL MATERIALS, APPARATUS, DEVICES, APPLIANCES, FIXTURES, AND EQUIPMENT USED OR INSTALLED UNDER THE PROVISIONS OF THIS CODE. ALL ELECTRICAL MATERIALS AND EQUIPMENT SHALL BE LISTED AND LABELED FOR THE INTENDED USE AND SHALL BE INCLUDED IN A LIST PUBLISHED BY AN APPROVAL AGENCY.

NO.	DATE	REVISION	APP.

FOR INTERIM REVIEW
ONLY NOT INTENDED FOR
PERMIT, BIDDING OR
CONSTRUCTION PURPOSES.
ENGINEER:
HOSS FOROUZAN
P.E. SERIAL NO.77748
05/18/2026

GAI
Gupta & Associates, Inc.
CONSULTING ENGINEERING
Registration No. F-2593
302 Dennis St.,
Houston, Texas 77006
Tel: 713-636-2936
Fax: 713-636-2987
email: hforouzan@gaiconsulting.com

IDS Engineering Group
13430 NW. Freeway
Suite 700
Houston, Tx. 77040
713.462.3178
TxEng Firm 2726
TxSurv Firm 10110700

CITY OF HOUSTON
HOUSTON PUBLIC WORKS

LIFT STATION RENEWAL AND REPLACEMENT FY 2023

MARKET ST. NO.2 LIFT STATION COMMUNICATION DIAGRAM

WBS NUMBER	FOR CITY OF HOUSTON USE ONLY
R-000267-0179-4	
DRAWING SCALE	
HORIZ: NTS VERT: NTS	
CITY OF HOUSTON PM	
NAWARAJ PANTA, P.E.	
SHEET NO. 211 OF 361	

DWG. NO. MKT-I-03

IDS JOB No. 0057-085-00

PLOTTED: 5/12/2026 8:56 PM

FILE PATH: O:\H8108_Lift Station Rehabilitation And Reconstruction (IDS)\6 Drawings\Instrumentation And Control\Working\Market St. #2\H8108_MKT-I-04.dwg

EQUIPMENT AND DEVICE SCHEDULE

ITEM	QUANTITY	DESCRIPTION
A	1	PANEL BOARD, 120/240V, 1 PHASE, 3 WIRE, 100A, 12 CKTS
B	2	FULL VOLTAGE, NON-REVERSING, SINGLE SPEED, AUTOMATIC MOTOR STARTER W/120 VOLT CONTROL COIL, NEMA SIZE AS SCHEDULED.
C	2	TIME DELAY RELAY WITH THREE FORM C CONTACTS, 120VAC COIL AND 11 PIN SOCKET BASE.
D	1	SINGLE CHANNEL INTRINSICALLY SAFE RELAY
E	1	PROGRAMMING SCREEN (OIT)
F	2	HAND-OFF-AUTO SWITCH, 3 POSITION, HEAVY-DUTY, OILTIGHT WITH 2 SETS OF CONTACT BLOCKS (PUMP CONTROL)
G	2	INDICATING LIGHT, HEAVY DUTY, OILTIGHT, RED, 24 VDC, LED, WITH "RUN" LEGEND
H	1	PERPETUAL POWER UNIT (PPU)
I	1	PUMP ALARM RESET PUSHBUTTON
J	2	SWITCH FOR CABINET LIGHT, 120V, 20A, SPST
K	3	DUPLEX RECEPTACLE, 120V, 20A, 2 WIRE, GROUNDED
L	2	24" LED STRIP LIGHT 120V SUITABLE FOR ZERO DEGREE OPERATION.
M	1	SURGE PROTECTOR - INCOMING POWER
N	*	NOT USED.
P	2	CURRENT TRANSFORMER, RATIO AS SCHEDULED W/4-20mA OUTPUT.
Q	12	TERMINAL BLOCKS, SIZED FOR MOTOR POWER REQUIREMENTS
R	*	RELAY WITH THREE FORM C CONTACTS, AND 11 PIN SOCKET BASE
S	*	NOT USED.
T	*	NAMEPLATES, SEE SPECIFICATIONS (SEE NAMEPLATE SCHEDULE)
U	2	SOLID STATE MOTOR OVERLOAD RELAY
V	6	FUSE HOLDER & FUSES - PHASE FAILURE
W	1	NEMA 3R GASKETED ALUMINUM ENCLOSURE WITHOUT VENTS 72"H x 48"w x 36"D
X	1	DOOR MOUNTED ROTARY HANDLE DISCONNECT SWITCH (SUITABLE FOR ENVIRONMENT)
Y	1	THERMAL-MAGNETIC MOLDED CASE MAIN CIRCUIT BREAKER, SIZE AS SCHEDULED
Z	2	ADJUSTABLE INSTANTENOUS TRIP MOTOR CIRCUIT PROTECTOR, SIZE AS SCHEDULED
AA	*	TERMINAL BLOCKS
BB	2	EXTERNAL OVERLOAD RESET PUSHBUTTON MECHANISM
CC	2	ANALOG I/O SURGE SUPPRESSOR
DD	1	WIRE DUCT 2" WIDE x 2" DEEP MINIMUM
EE	1	THERMAL-MAGNETIC MODLED CASE CIRCUIT BREAKER FOR LIGHTING TRANSFORMER, SIZE AS SCHEDULED
FF	1	GROUND BUS
GG	1	10 KVA, 480 - 240/120V,1ϕ, 3W DRY TYPE NEMA 3R ENCLOSURE TRANSFORMER
HH	*	NOT USED.
II	1	120VAC - 24VAC POWER SUPPLY (AS REQUIRED)
JJ	11	CARTRIDGE FUSES & FUSE HOLDER
KK	8	QUARTER TURN CAPTIVE DOOR CLOSURE
LL	1	120VAC - 24VDC PLC POWER SUPPLY 5A
MM	2	MOTION SWITCH
NN	*	NOT USED
PP	2	INDICATING LED LIGHT, HEAVY DUTY, OILTIGHT, GREEN, 24 VDC, LED WITH " PRIMARY PLC" & "BACKUP PLC" LEGEND
QQ	*	NOT USED
RR	*	NOT USED
SS	1	COMMUNICATION ETHERNET SWITCH
TT	1	POWER SURGE PROTECTOR - CONTROL POWER
UU	2	PROGRAMMABLE LOGIC CONTROLLER WITH EXPANSION UNIT
VV	1	PHASE AND UNDER VOLTAGE MONITOR
WW	*	FUSED TERMINAL BLOCKS
XX	2	PUMP PROTECTION MODULE RATED FOR CLASS I, DIVISION I
YY	2	ANALOG SIGNAL ISOLATOR
ZZ	-	NOT USED
AB	-	NOT USED.
AC	1	POWER DISTRIBUTION BLOCK
AD	1	NEUTRAL LUG
AE	1	6" EXHAUST FAN, 120V, STAINLESS FILTERS & GRILL PACKAGE W/BUG GUARD
AF	1	T-STAT FOR EXHAUST FAN

* - AS SCHEDULED

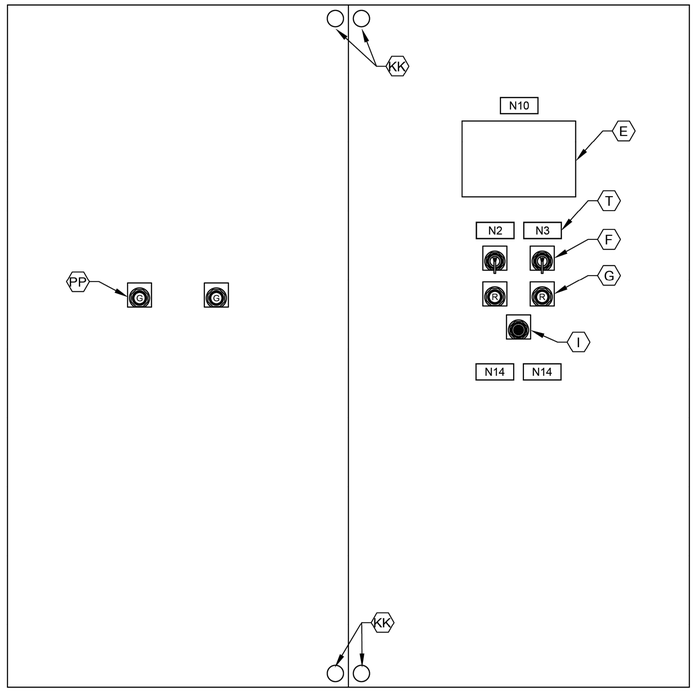

CONTROL PANEL FRONT INNER DOOR

ELEVATION

NTS

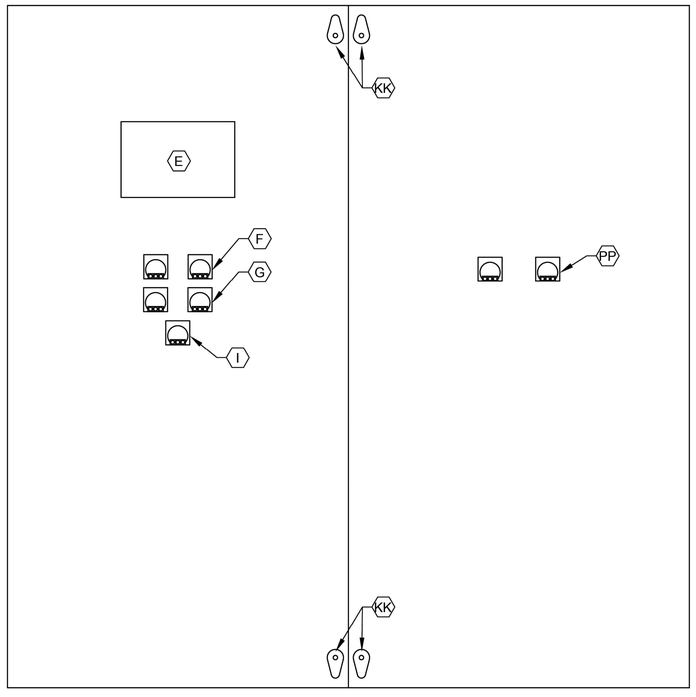

CONTROL PANEL BACK INNER DOOR

ELEVATION

NTS

NOTES:

1. NAMEPLATES SHALL BE MOUNTED TO PANELS USING STAINLESS STEEL HARDWARE.
2. REFER SPECIFICATIONS FOR ALL PANEL COMPONENTS.

GENERAL NOTES:

1. NO ELECTRICAL MATERIAL, APPARATUS, DEVICES, APPLIANCES, FIXTURES, OR EQUIPMENT SHALL BE SOLD OR INSTALLED IN THE CITY UNLESS THEY ARE IN CONFORMANCE WITH THE PROVISIONS OF SECTION 508 CITY OF HOUSTON ELECTRICAL CODE, THE LAWS OF THE STATE OF TEXAS AND ANY APPLICABLE RULES AND REGULATIONS ISSUED UNDER THE AUTHORITY OF THE STATE STATUES. THE MAKER'S NAME, TRADEMARK, OR OTHER IDENTIFICATION SYMBOL SHALL BE PLACED ON ALL ELECTRICAL MATERIALS, APPARATUS, DEVICES, APPLIANCES, FIXTURES, AND EQUIPMENT USED OR INSTALLED UNDER THE PROVISIONS OF THIS CODE. ALL ELECTRICAL MATERIALS AND EQUIPMENT SHALL BE LISTED AND LABELED FOR THE INTENDED USE AND SHALL BE INCLUDED IN A LIST PUBLISHED BY AN APPROVAL AGENCY.

NO.	DATE	REVISION	APP.

FOR INTERIM REVIEW
ONLY NOT INTENDED FOR
PERMIT, BIDDING OR
CONSTRUCTION PURPOSES.
ENGINEER:
HOSS FOROUZAN
P.E. SERIAL NO.77748
05/18/2026

GAI
Gupta & Associates, Inc.
CONSULTING ENGINEERING
Registration No. F-2593
302 Dennis St.,
Houston, Texas 77006
Tel: 713-636-2936
Fax: 713-636-2987
email: hforouzan@gaiconsulting.com

IDS Engineering Group
13430 NW. Freeway
Suite 700
Houston, Tx. 77040
713.462.3178
TxEng Firm 2726
TxSurv Firm 10110700

CITY OF HOUSTON
HOUSTON PUBLIC WORKS

LIFT STATION RENEWAL
AND REPLACEMENT FY 2023

MARKET ST. NO.2 LIFT STA. CONTROL PANEL EQUIP. LAYOUT & SCHEDULE

WBS NUMBER	FOR CITY OF HOUSTON USE ONLY
R-000267-0179-4	
DRAWING SCALE	
HORIZ: NTS VERT: NTS	
CITY OF HOUSTON PM	
NAWARAJ PANTA, P.E.	
SHEET NO. 212 OF 361	

DWG. NO. MKT-I-04

IDS JOB No. 0057-085-00

PLOTTED: 5/12/2026 8:56 PM

FILE PATH: O:\H8108_Lift Station Rehabilitation And Reconstruction (IDS)\6 Drawings\Instrumentation And Control\Working\Market St. #2\H8108_MKT-I-05.dwg

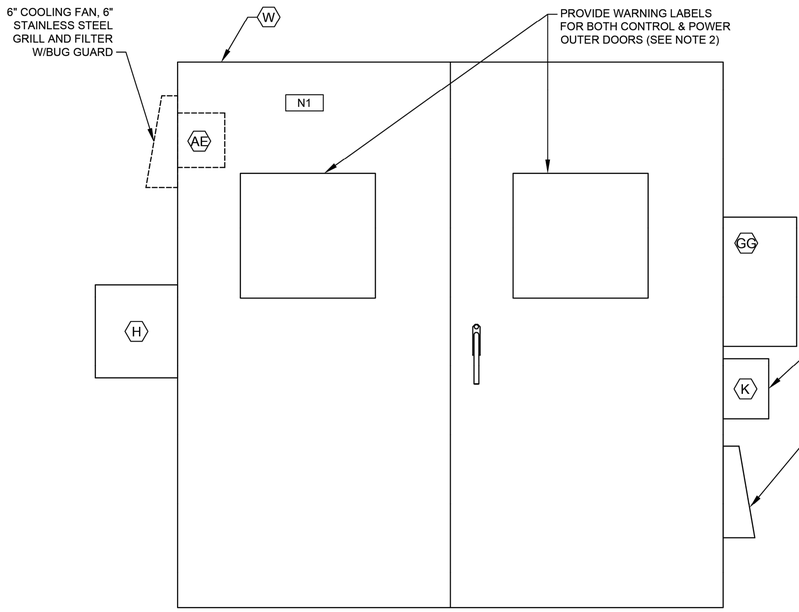

CONTROL CABINET (CONTROL SIDE)
OUTER DOOR

ELEVATION

NTS

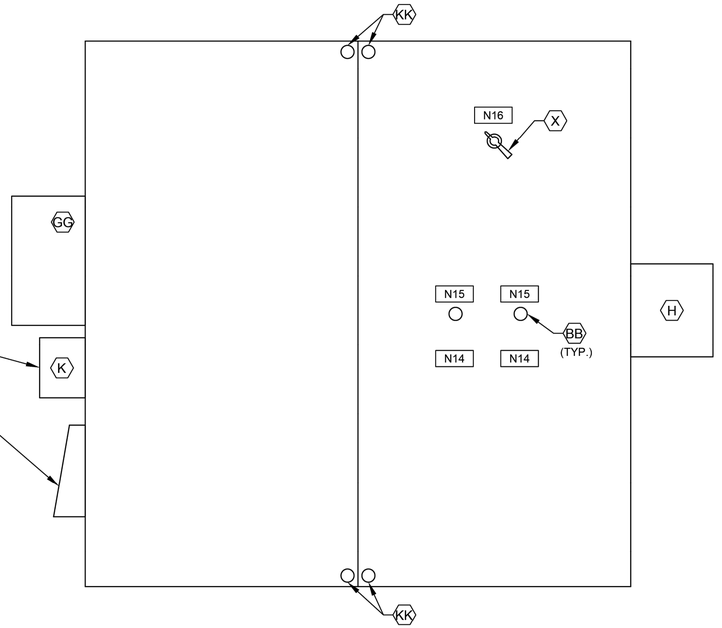

CONTROL CABINET (POWER SIDE)
INNER DOOR

ELEVATION

NTS

(SEE NOTE 1)

NAMEPLATE SCHEDULE

DESIGNATION	ENGRAVED
N1	PUMP STATION DESIGNATION
N2	PUMP NO. 1
N3	PUMP NO. 2
N4	NOT USED.
N5	NOT USED.
N6	NOT USED.
N7	NOT USED.
N8	NOT USED.
N9	NOT USED.
N10	PROGRAMMING SCREEN
N11	NOT USED.
N12	PRIMARY PLC
N13	BACKUP PLC
N14	MOTOR DATA HORSEPOWER (OUTPUT) ---------- RPM AT FULL LOAD ---------- TIME RATING ---------- FREQUENCY ---------- NUMBER OF PHASES ---------- MODEL NUMBER ---------- RATED VOLTAGE ---------- SERVICE FACTOR ---------- FULL LOAD AMPS ---------- INSULATION CLAS ---------- NEMA DESIGN LETTER ---------- TEMPERATURE RISE ---------- NEMA FRAME SIZE ---------- DATE OF MANUFACTURE ---------- THERMO PROTECTION (IF REQUIRED) -- MOISTURE PROTECTION (IF REQUIRED)-
N15	EXTERNAL OVERLOAD RESET PUSH BUTTON MECHANISM
N16	MAIN BREAKER

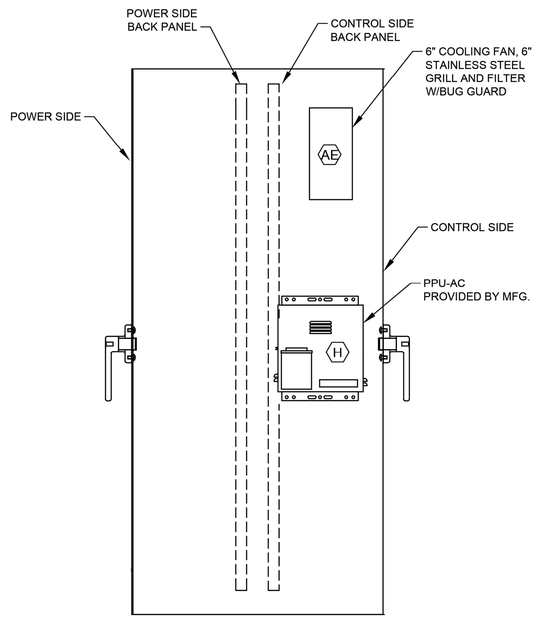

CONTROL CABINET (LEFT SIDE VIEW)

ELEVATION

NTS

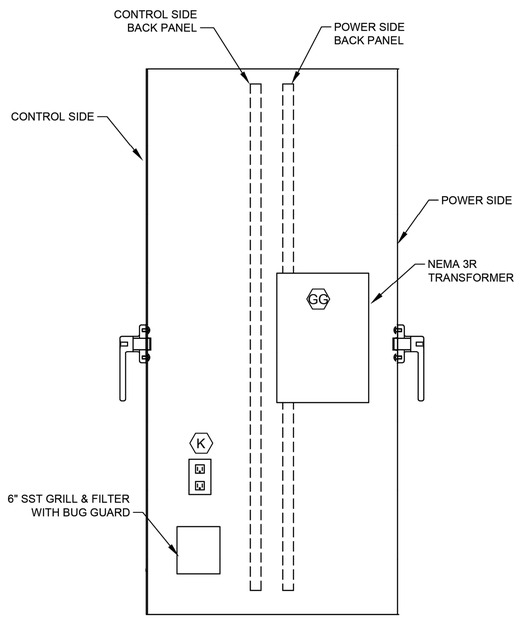

CONTROL CABINET (RIGHT SIDE VIEW)

ELEVATION

NTS

NOTES:

1. SEE SHEET MKT-I-4 FOR EQUIPMENT SCHEDULE.
2. REFER TO NEC SECTIONS 110.16 & 110.21

GENERAL NOTES:

1. NO ELECTRICAL MATERIAL, APPARATUS, DEVICES, APPLIANCES, FIXTURES, OR EQUIPMENT SHALL BE SOLD OR INSTALLED IN THE CITY UNLESS THEY ARE IN CONFORMANCE WITH THE PROVISIONS OF SECTION 508 CITY OF HOUSTON ELECTRICAL CODE, THE LAWS OF THE STATE OF TEXAS AND ANY APPLICABLE RULES AND REGULATIONS ISSUED UNDER THE AUTHORITY OF THE STATE STATUES. THE MAKER'S NAME, TRADEMARK, OR OTHER IDENTIFICATION SYMBOL SHALL BE PLACED ON ALL ELECTRICAL MATERIALS, APPARATUS, DEVICES, APPLIANCES, FIXTURES, AND EQUIPMENT USED OR INSTALLED UNDER THE PROVISIONS OF THIS CODE. ALL ELECTRICAL MATERIALS AND EQUIPMENT SHALL BE LISTED AND LABELED FOR THE INTENDED USE AND SHALL BE INCLUDED IN A LIST PUBLISHED BY AN APPROVAL AGENCY.

NO.	DATE	REVISION	APP.

FOR INTERIM REVIEW
ONLY NOT INTENDED FOR
PERMIT, BIDDING OR
CONSTRUCTION PURPOSES.
ENGINEER:
HOSS FOROUZAN
P.E. SERIAL NO.77748
05/18/2026

GAI
Gupta & Associates, Inc.
CONSULTING ENGINEERING
Registration No. F-2593
302 Dennis St.,
Houston, Texas 77006
Tel: 713-636-2936
Fax: 713-636-2987
email: hforouzan@gaiconsulting.com

IDS Engineering Group
13430 NW. Freeway
Suite 700
Houston, Tx. 77040
713.462.3178
TxEng Firm 2726
TxSurv Firm 10110700

CITY OF HOUSTON
HOUSTON PUBLIC WORKS

LIFT STATION RENEWAL
AND REPLACEMENT FY 2023

MARKET ST. NO.2 LIFT STA.
CONTROL PANEL
EQUIPMENT LAYOUT–I

WBS NUMBER	FOR CITY OF HOUSTON USE ONLY
R–000267–0179–4	
DRAWING SCALE	
HORIZ: NONE VERT: NONE	
CITY OF HOUSTON PM	
NAWARAJ PANTA, P.E.	

DWG. NO.	SHEET NO. 213 OF 361
MKT–I–05	

IDS JOB No. 0057-085-00

PLOTTED: 5/12/2026 8:56 PM

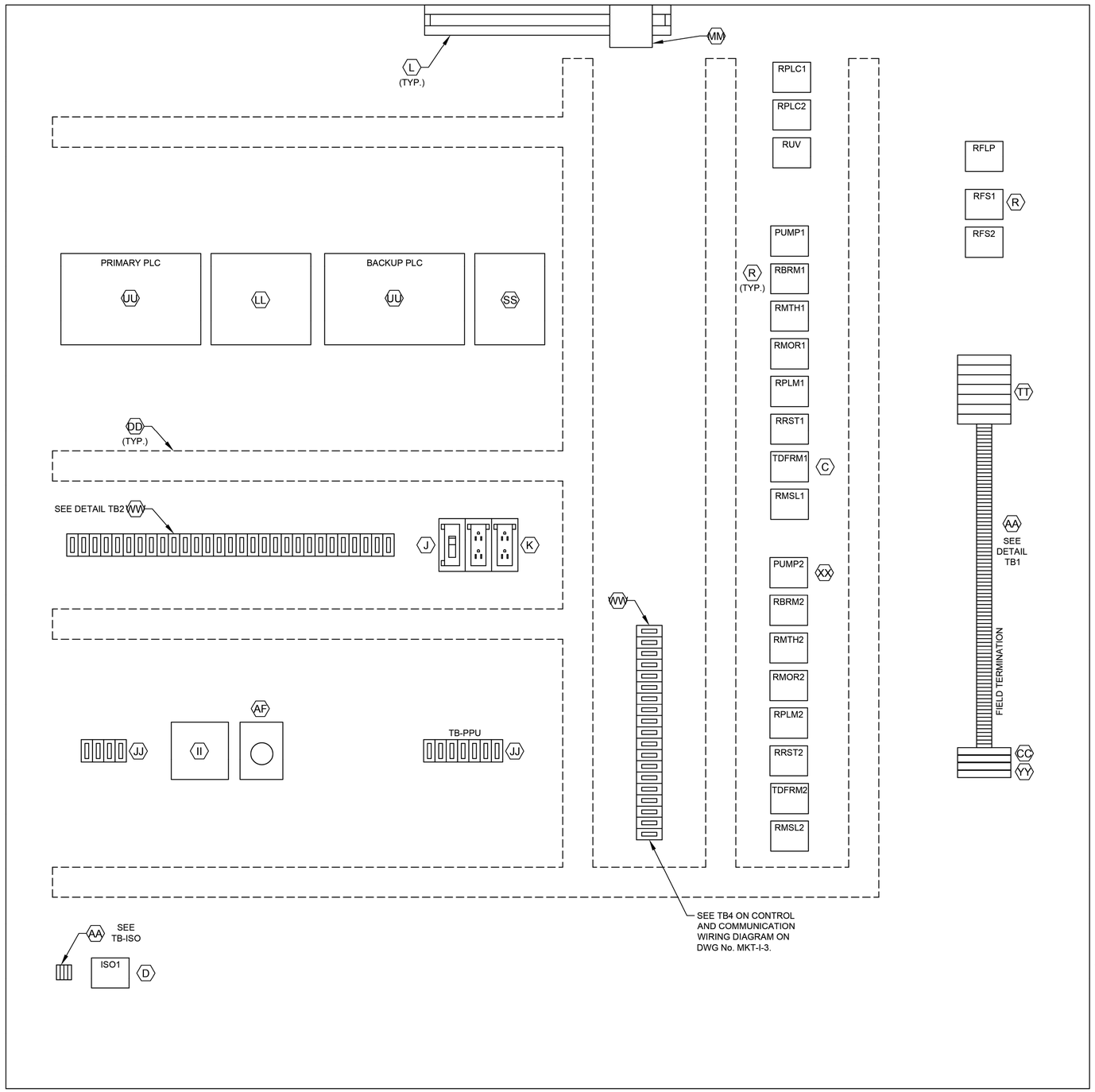

CONTROL PANEL ELEVATION

L1A
L1N
SPARE
3
3N
49
50
51
52
53
54
1004
1
24V-
24V-
1002
2
11
1001
1001A
12
1003
1003A
1002
1004
18
3N
19
20
36
36N
41
42
43
44
SPARE
L1A
L1N
103
104
105
106
107
108
110
113
115
116
119
SPARE
203
204
205
206
207
208
210
213
215
216
219

DETAIL TB1

ALL L AND N FOR EACH PUMP CONTROL TO BE FUSED

36A
37A
50
52
54
52A
54A
L+
M
35B
38B
41B
47B
13B
13AB
13GB
L+
M
14B
14AB
14GB
L+
M
13
13A
13G
14
14A
14G
SPARE
18
SPARE
28
29
32
35B
33
42
44
SPARE
103
104
115
109
110
118
120
121
122
123
SPARE
209
210
211
218
220
222
223

DETAIL TB2

1500
1501
1503
1504

DETAIL TB-ISO

LEGEND	
TAG	DESCRIPTION
RMTH	MOTOR HIGH TEMPERATURE ALARM RELAY
RPLM	PLC PUMP RUN RELAY
RRST	PUMP RESET AUX RELAY
RPLC	PLC MODE AUX RELAY
RMOR	MOTOR OVERLOAD ALARM RELAY
RBRM	BACKUP SYSTEM RUN RELAY
RUV	UNDER VOLTAGE RELAY
ISO	INTRINSICALLY SAFE RELAY
RFS	PUMP RUN FLOAT SWITCH RELAY
TDFRM	TIMER FLOAT SWITCH RUN RELAY
RMSL	MOTOR SEAL LEAK ALARM RELAY
RFLP	FLOAT LOCKOUT PUMP RELAY

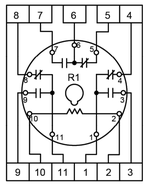

RELAY DETAIL ITEM R

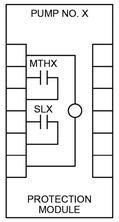

PUMP PROTECTION MODULE DETAIL, ITEM XX

NOTE: REPLACE "X" WITH APPROPRIATE PUMP NO.

NOTES:

1. SEE SHEET MKT-I-4 FOR EQUIPMENT SCHEDULE.

GENERAL NOTES:

1. NO ELECTRICAL MATERIAL, APPARATUS, DEVICES, APPLIANCES, FIXTURES, OR EQUIPMENT SHALL BE SOLD OR INSTALLED IN THE CITY UNLESS THEY ARE IN CONFORMANCE WITH THE PROVISIONS OF SECTION 508 CITY OF HOUSTON ELECTRICAL CODE, THE LAWS OF THE STATE OF TEXAS AND ANY APPLICABLE RULES AND REGULATIONS ISSUED UNDER THE AUTHORITY OF THE STATE STATUES. THE MAKER'S NAME, TRADEMARK, OR OTHER IDENTIFICATION SYMBOL SHALL BE PLACED ON ALL ELECTRICAL MATERIALS, APPARATUS, DEVICES, APPLIANCES, FIXTURES, AND EQUIPMENT USED OR INSTALLED UNDER THE PROVISIONS OF THIS CODE. ALL ELECTRICAL MATERIALS AND EQUIPMENT SHALL BE LISTED AND LABELED FOR THE INTENDED USE AND SHALL BE INCLUDED IN A LIST PUBLISHED BY AN APPROVAL AGENCY.

NO.	DATE	REVISION	APP.

FOR INTERIM REVIEW
ONLY NOT INTENDED FOR
PERMIT, BIDDING OR
CONSTRUCTION PURPOSES.
ENGINEER:
HOSS FOROUZAN
P.E. SERIAL NO.77748
05/18/2026

GAI
Gupta & Associates, Inc.
CONSULTING ENGINEERING
Registration No. F-2593
302 Dennis St.,
Houston, Texas 77006
Tel: 713-636-2936
Fax: 713-636-2987
email: hforouzan@gaiconsulting.com

IDS Engineering Group
13430 NW. Freeway
Suite 700
Houston, Tx. 77040
713.462.3178
TxEng Firm 2726
TxSurv Firm 10110700

CITY OF HOUSTON
HOUSTON PUBLIC WORKS

LIFT STATION RENEWAL AND REPLACEMENT FY 2023

MARKET ST. #2 LIFT STA. CONTROL PANEL EQUIPMENT LAYOUT–II

WBS NUMBER	FOR CITY OF HOUSTON USE ONLY
R–000267–0179–4	
DRAWING SCALE	
HORIZ: NONE VERT: NONE	
CITY OF HOUSTON PM	
NAWARAJ PANTA, P.E.	
SHEET NO. 214 OF 361	

DWG. NO. MKT–I–06

IDS JOB No. 0057-085-00

FILE PATH: O:\H8108_Lift Station Rehabilitation And Reconstruction (IDS)\6 Drawings\Instrumentation And Control\Working\Market St. #2\H8108_MKT–I–06.dwg

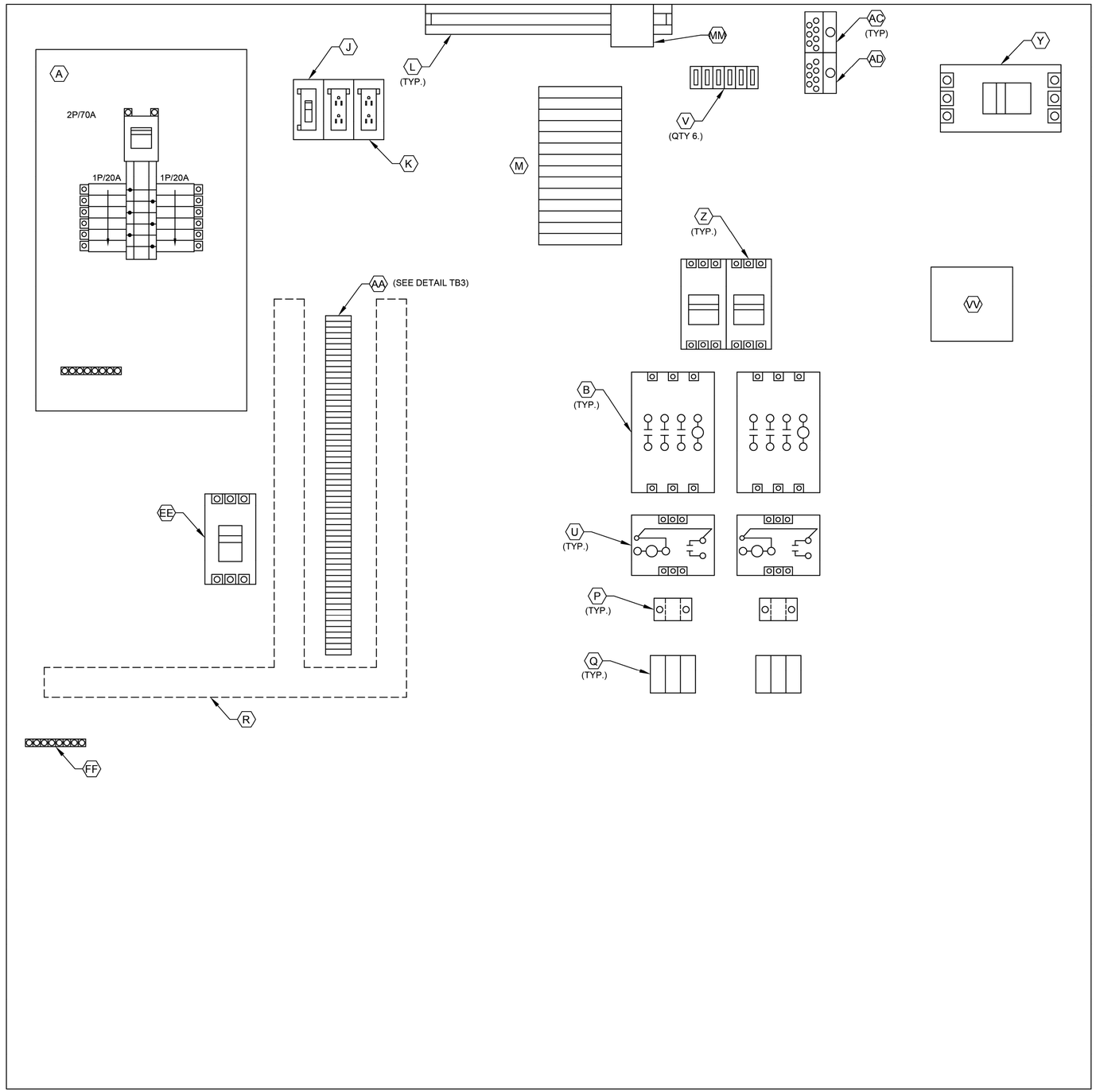

POWER PANEL
ELEVATION

3
18
L1A
L1N
SPARE
SPARE
103
104
105
106
107
108
110
113
115
116
119
SPARE
203
204
205
206
207
208
210
213
215
216
219
SPARE
SPARE
SPARE
SPARE
SPARE
SPARE
SPARE
SPARE
SPARE
SPARE

DETAIL TB3

NOTES:

1. SEE SHEET MKT-I-4 FOR EQUIPMENT SCHEDULE.

GENERAL NOTES:

1. NO ELECTRICAL MATERIAL, APPARATUS, DEVICES, APPLIANCES, FIXTURES, OR EQUIPMENT SHALL BE SOLD OR INSTALLED IN THE CITY UNLESS THEY ARE IN CONFORMANCE WITH THE PROVISIONS OF SECTION 508 CITY OF HOUSTON ELECTRICAL CODE, THE LAWS OF THE STATE OF TEXAS AND ANY APPLICABLE RULES AND REGULATIONS ISSUED UNDER THE AUTHORITY OF THE STATE STATUES. THE MAKER'S NAME, TRADEMARK, OR OTHER IDENTIFICATION SYMBOL SHALL BE PLACED ON ALL ELECTRICAL MATERIALS, APPARATUS, DEVICES, APPLIANCES, FIXTURES, AND EQUIPMENT USED OR INSTALLED UNDER THE PROVISIONS OF THIS CODE. ALL ELECTRICAL MATERIALS AND EQUIPMENT SHALL BE LISTED AND LABELED FOR THE INTENDED USE AND SHALL BE INCLUDED IN A LIST PUBLISHED BY AN APPROVAL AGENCY.

NO.	DATE	REVISION	APP.

FOR INTERIM REVIEW
ONLY NOT INTENDED FOR
PERMIT, BIDDING OR
CONSTRUCTION PURPOSES.
ENGINEER:
HOSS FOROUZAN
P.E. SERIAL NO.77748
05/18/2026

GAI
Gupta & Associates, Inc.
CONSULTING ENGINEERING
Registration No. F-2593
302 Dennis St.,
Houston, Texas 77006
Tel: 713-636-2936
Fax: 713-636-2987
email: hforouzan@gaiconsulting.com

IDS Engineering Group
13430 NW. Freeway
Suite 700
Houston, Tx. 77040
713.462.3178
TxEng Firm 2726
TxSurv Firm 10110700

CITY OF HOUSTON
HOUSTON PUBLIC WORKS

LIFT STATION RENEWAL
AND REPLACEMENT FY 2023

MARKET ST. #2 LIFT STA.
CONTROL PANEL
EQUIPMENT LAYOUT–III

WBS NUMBER	FOR CITY OF HOUSTON USE ONLY
R–000267–0179–4	
DRAWING SCALE	
HORIZ: NONE VERT: NONE	
CITY OF HOUSTON PM	
NAWARAJ PANTA, P.E.	
SHEET NO. 215 OF 361	

DWG. NO.
MKT–I–07

IDS JOB No. 0057-085-00

PLOTTED: 5/12/2026 8:56 PM

FILE PATH: O:\H8108_Lift Station Rehabilitation And Reconstruction (IDS)\6 Drawings\Instrumentation And Control\Working\Market St. #2\H8108_MKT–I–07.dwg

PLOTTED: 5/12/2026 8:56 PM

FILE PATH: O:\H8108_Lift Station Rehabilitation And Reconstruction (IDS)\6 Drawings\Instrumentation And Control\Working\Market St. #2\H8108_MKT-I-08.dwg

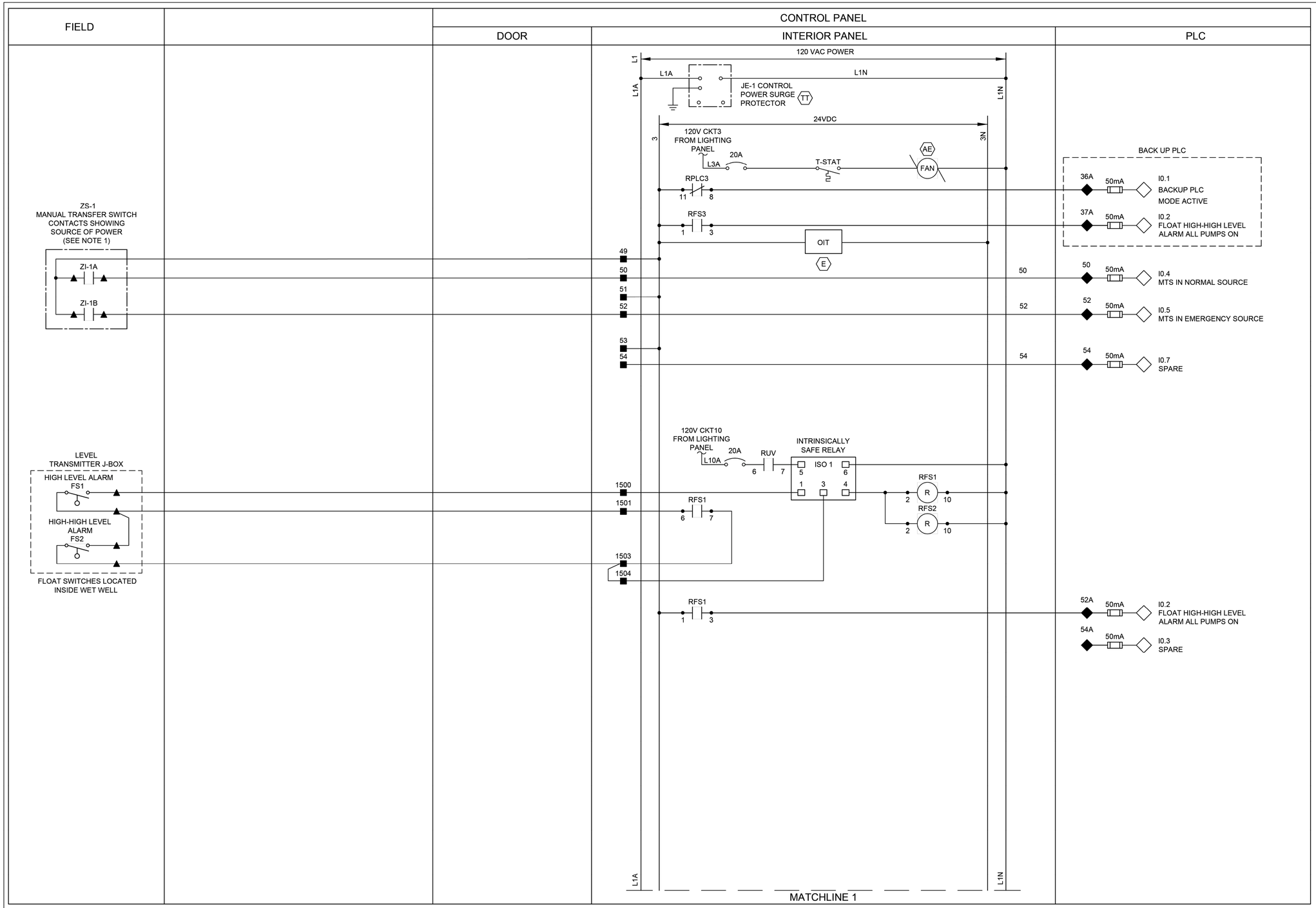

NOTES:

1. PROVIDE MANUAL TRANSFER SWITCH DRY CONTACT.
2. ALL FLOAT CONTROL CIRCUIT WIRES COLOR SHALL BE YELLOW.

GENERAL NOTES:

1. NO ELECTRICAL MATERIAL, APPARATUS, DEVICES, APPLIANCES, FIXTURES, OR EQUIPMENT SHALL BE SOLD OR INSTALLED IN THE CITY UNLESS THEY ARE IN CONFORMANCE WITH THE PROVISIONS OF SECTION 508 CITY OF HOUSTON ELECTRICAL CODE, THE LAWS OF THE STATE OF TEXAS AND ANY APPLICABLE RULES AND REGULATIONS ISSUED UNDER THE AUTHORITY OF THE STATE STATUES. THE MAKER'S NAME, TRADEMARK, OR OTHER IDENTIFICATION SYMBOL SHALL BE PLACED ON ALL ELECTRICAL MATERIALS, APPARATUS, DEVICES, APPLIANCES, FIXTURES, AND EQUIPMENT USED OR INSTALLED UNDER THE PROVISIONS OF THIS CODE. ALL ELECTRICAL MATERIALS AND EQUIPMENT SHALL BE LISTED AND LABELED FOR THE INTENDED USE AND SHALL BE INCLUDED IN A LIST PUBLISHED BY AN APPROVAL AGENCY.

LEGEND

- △ DEVICE OR FIELD TERMINAL LOCATED AT MOTOR
- ✳ DEVICE OR FIELD TERMINAL LOCATED REMOTE
- □ DEVICE OR FIELD TERMINAL LOCATED AT MCC/POWER PANEL
- ■ FIELD TERMINAL LOCATED AT CONTROL PANEL
- ▲ REMOTE TERMINAL
- ● DEVICE TERMINAL NO.
- ◆ PLC INTERFACE TERMINAL

NO.	DATE	REVISION	APP.

FOR INTERIM REVIEW
ONLY NOT INTENDED FOR
PERMIT, BIDDING OR
CONSTRUCTION PURPOSES.
ENGINEER:
HOSS FOROUZAN
P.E. SERIAL NO.77748
05/18/2026

GAI
Gupta & Associates, Inc.
CONSULTING ENGINEERING
Registration No. F-2593
302 Dennis St.,
Houston, Texas 77006
Tel: 713-636-2936
Fax: 713-636-2987
email: hforouzan@gaiconsulting.com

IDS Engineering Group
13430 NW. Freeway
Suite 700
Houston, Tx. 77040
713.462.3178
TxEng Firm 2726
TxSurv Firm 10110700

CITY OF HOUSTON
HOUSTON PUBLIC WORKS

LIFT STATION RENEWAL
AND REPLACEMENT FY 2023

MARKET ST. NO.2 LIFT STA.
CONTROL PANEL
CONTROL WIRING DIAGRAM–I

WBS NUMBER	FOR CITY OF HOUSTON USE ONLY
R–000267–0179–4	
DRAWING SCALE	
HORIZ: NONE VERT: NONE	
CITY OF HOUSTON PM	
NAWARAJ PANTA, P.E.	
SHEET NO. 216 OF 361	

DWG. NO. MKT–I–08

IDS JOB No. 0057-085-00

PLOTTED: 5/12/2026 8:56 PM

FILE PATH: O:\H8108_Lift Station Rehabilitation And Reconstruction (IDS)\6 Drawings\Instrumentation And Control\Working\Market St. #2\H8108_MKT-I-09.dwg

FIELD		CONTROL PANEL		
		DOOR	INTERIOR PANEL	PLC

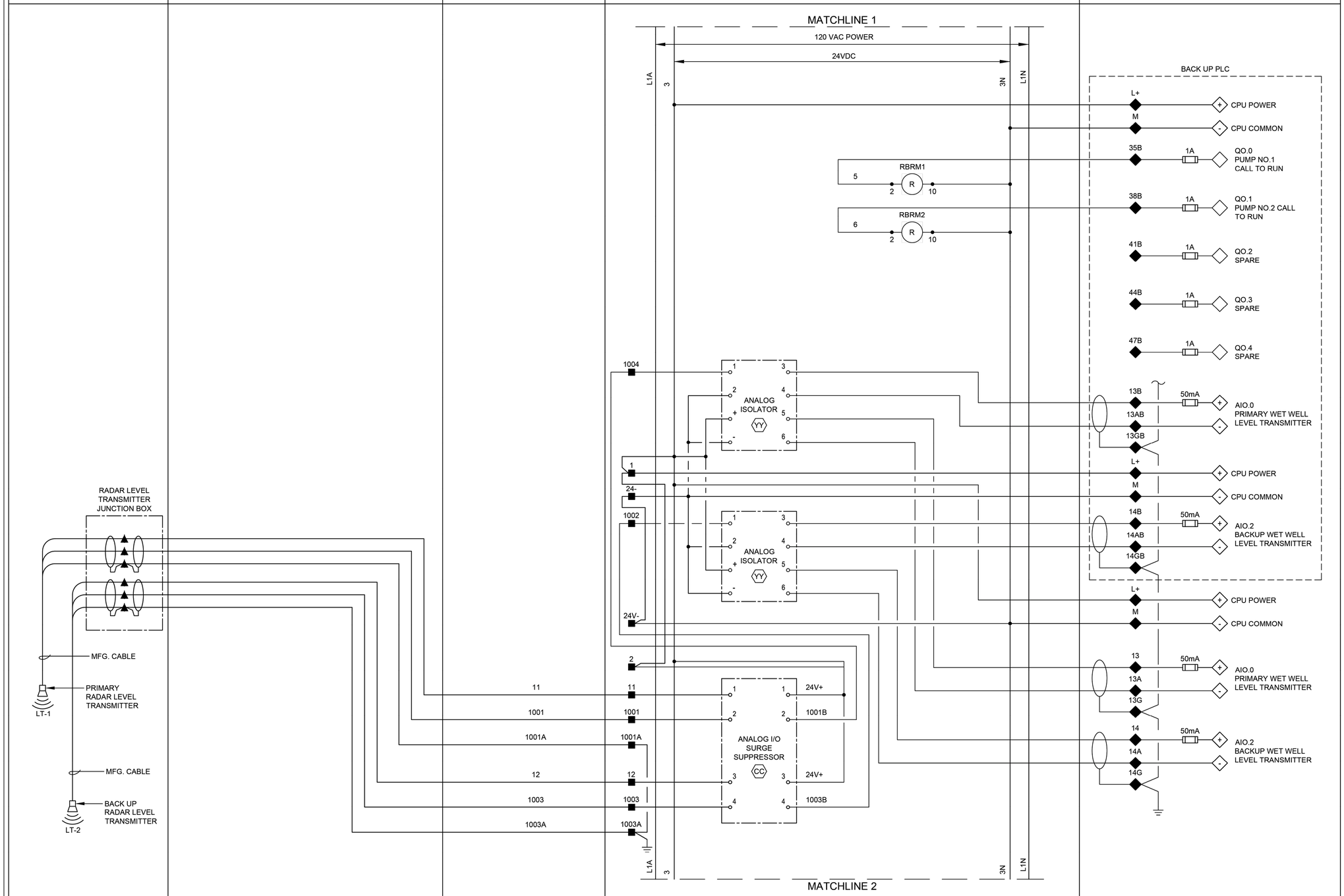

LEGEND

- △ DEVICE OR FIELD TERMINAL LOCATED AT MOTOR
- ✳ DEVICE OR FIELD TERMINAL LOCATED REMOTE
- □ DEVICE OR FIELD TERMINAL LOCATED AT MCC/POWER PANEL
- ■ FIELD TERMINAL LOCATED AT CONTROL PANEL
- ▲ REMOTE TERMINAL
- ● DEVICE TERMINAL NO.
- ◆ PLC INTERFACE TERMINAL

NO.	DATE	REVISION	APP.

GENERAL NOTES:

1. NO ELECTRICAL MATERIAL, APPARATUS, DEVICES, APPLIANCES, FIXTURES, OR EQUIPMENT SHALL BE SOLD OR INSTALLED IN THE CITY UNLESS THEY ARE IN CONFORMANCE WITH THE PROVISIONS OF SECTION 508 CITY OF HOUSTON ELECTRICAL CODE, THE LAWS OF THE STATE OF TEXAS AND ANY APPLICABLE RULES AND REGULATIONS ISSUED UNDER THE AUTHORITY OF THE STATE STATUES. THE MAKER'S NAME, TRADEMARK, OR OTHER IDENTIFICATION SYMBOL SHALL BE PLACED ON ALL ELECTRICAL MATERIALS, APPARATUS, DEVICES, APPLIANCES, FIXTURES, AND EQUIPMENT USED OR INSTALLED UNDER THE PROVISIONS OF THIS CODE. ALL ELECTRICAL MATERIALS AND EQUIPMENT SHALL BE LISTED AND LABELED FOR THE INTENDED USE AND SHALL BE INCLUDED IN A LIST PUBLISHED BY AN APPROVAL AGENCY.

FOR INTERIM REVIEW
ONLY NOT INTENDED FOR
PERMIT, BIDDING OR
CONSTRUCTION PURPOSES.
ENGINEER:
HOSS FOROUZAN
P.E. SERIAL NO.77748
05/18/2026

GAI
Gupta & Associates, Inc.
CONSULTING ENGINEERING
Registration No. F-2593
302 Dennis St.,
Houston, Texas 77006
Tel: 713-636-2936
Fax: 713-636-2987
email: hforouzan@gaiconsulting.com

IDS Engineering Group
13430 NW. Freeway
Suite 700
Houston, Tx. 77040
713.462.3178
TxEng Firm 2726
TxSurv Firm 10110700

CITY OF HOUSTON

HOUSTON PUBLIC WORKS

LIFT STATION RENEWAL AND REPLACEMENT FY 2023

MARKET ST. NO.2 LIFT STA. CONTROL PANEL CONTROL WIRING DIAGRAM—II

WBS NUMBER	FOR CITY OF HOUSTON USE ONLY
R-000267-0179-4	
DRAWING SCALE	
HORIZ: NONE VERT: NONE	
CITY OF HOUSTON PM	
NAWARAJ PANTA, P.E.	
SHEET NO. 217 OF 361	

DWG. NO.
MKT—I—09

IDS JOB No. 0057-085-00

PLOTTED: 5/12/2026 8:56 PM

FILE PATH: O:\H8108_Lift Station Rehabilitation And Reconstruction (IDS)\6 Drawings\Instrumentation And Control\Working\Market St. #2\H8108_MKT-I-10.dwg

FIELD	POWER PANEL	CONTROL PANEL		
		DOOR	INTERIOR PANEL	PLC

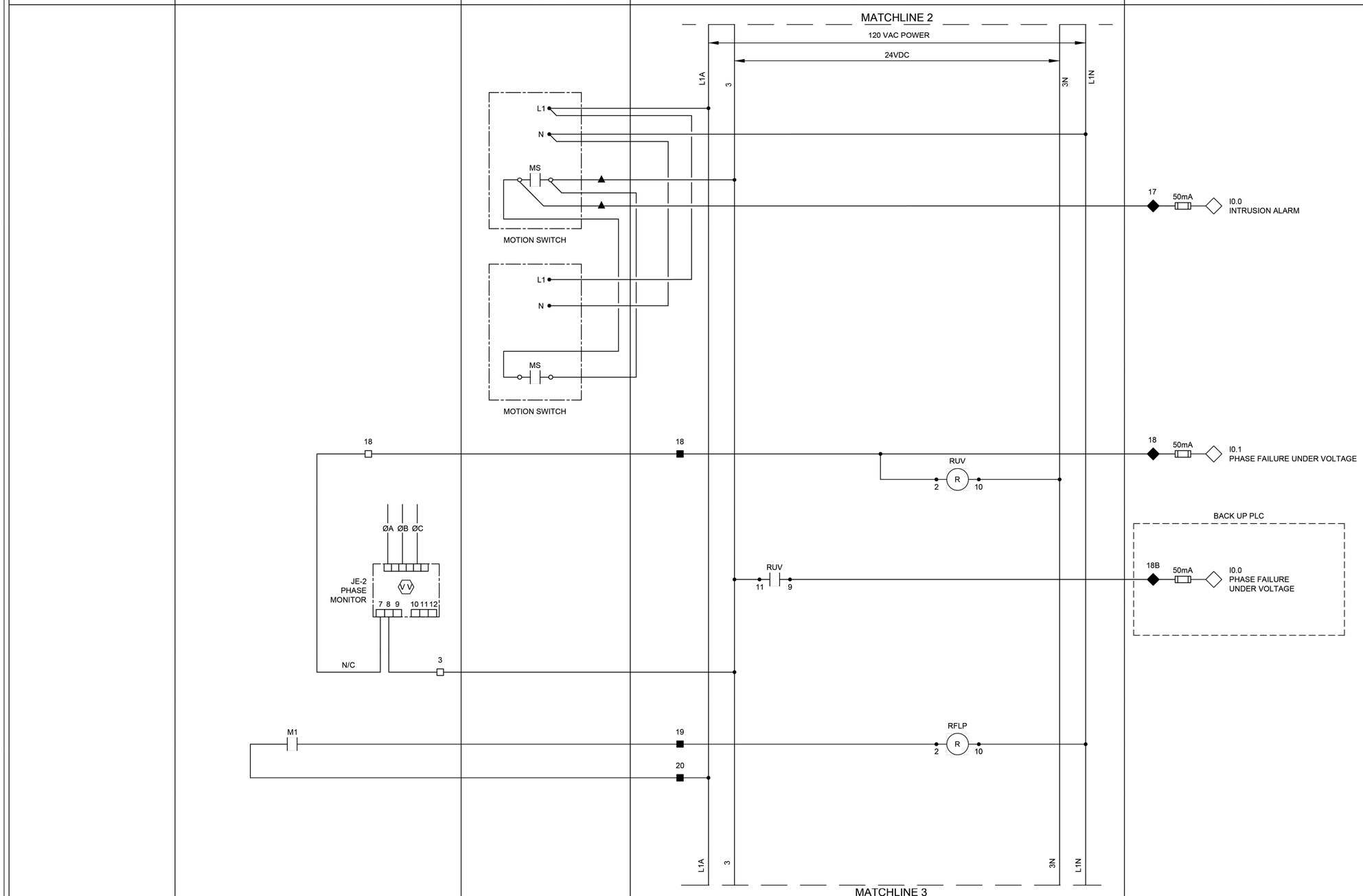

GENERAL NOTES:

1. NO ELECTRICAL MATERIAL, APPARATUS, DEVICES, APPLIANCES, FIXTURES, OR EQUIPMENT SHALL BE SOLD OR INSTALLED IN THE CITY UNLESS THEY ARE IN CONFORMANCE WITH THE PROVISIONS OF SECTION 508 CITY OF HOUSTON ELECTRICAL CODE, THE LAWS OF THE STATE OF TEXAS AND ANY APPLICABLE RULES AND REGULATIONS ISSUED UNDER THE AUTHORITY OF THE STATE STATUES. THE MAKER'S NAME, TRADEMARK, OR OTHER IDENTIFICATION SYMBOL SHALL BE PLACED ON ALL ELECTRICAL MATERIALS, APPARATUS, DEVICES, APPLIANCES, FIXTURES, AND EQUIPMENT USED OR INSTALLED UNDER THE PROVISIONS OF THIS CODE. ALL ELECTRICAL MATERIALS AND EQUIPMENT SHALL BE LISTED AND LABELED FOR THE INTENDED USE AND SHALL BE INCLUDED IN A LIST PUBLISHED BY AN APPROVAL AGENCY.

LEGEND

- △ DEVICE OR FIELD TERMINAL LOCATED AT MOTOR
- ✳ DEVICE OR FIELD TERMINAL LOCATED REMOTE
- □ DEVICE OR FIELD TERMINAL LOCATED AT MCC/POWER PANEL
- ■ FIELD TERMINAL LOCATED AT CONTROL PANEL
- ▲ REMOTE TERMINAL
- ● DEVICE TERMINAL NO.
- ◆ PLC INTERFACE TERMINAL

NO.	DATE	REVISION	APP.

FOR INTERIM REVIEW
ONLY NOT INTENDED FOR
PERMIT, BIDDING OR
CONSTRUCTION PURPOSES.
ENGINEER:
HOSS FOROUZAN
P.E. SERIAL NO.77748
05/18/2026

GAI
Gupta & Associates, Inc.
CONSULTING ENGINEERING
Registration No. F-2593
302 Dennis St.,
Houston, Texas 77006
Tel: 713-636-2936
Fax: 713-636-2987
email: hforouzan@gaiconsulting.com

IDS Engineering Group
13430 NW. Freeway
Suite 700
Houston, Tx. 77040
713.462.3178
TxEng Firm 2726
TxSurv Firm 10110700

CITY OF HOUSTON
HOUSTON PUBLIC WORKS

LIFT STATION RENEWAL
AND REPLACEMENT FY 2023

MARKET ST. NO.2 LIFT STATION CONTROL PANEL CONTROL WIRING DIAGRAM—III

WBS NUMBER	FOR CITY OF HOUSTON USE ONLY
R-000267-0179-4	
DRAWING SCALE	
HORIZ: NONE VERT: NONE	
CITY OF HOUSTON PM	
NAWARAJ PANTA, P.E.	
SHEET NO. 218 OF 361	

DWG. NO. MKT-I-10

IDS JOB No. 0057-085-00

PLOTTED: 5/12/2026 8:56 PM

FILE PATH: O:\H8108_Lift Station Rehabilitation And Reconstruction (IDS)\6 Drawings\Instrumentation And Control\Working\Market St. #2\H8108_MKT-I-11.dwg

FIELD	POWER PANEL	CONTROL PANEL		
		DOOR	INTERIOR PANEL	PLC

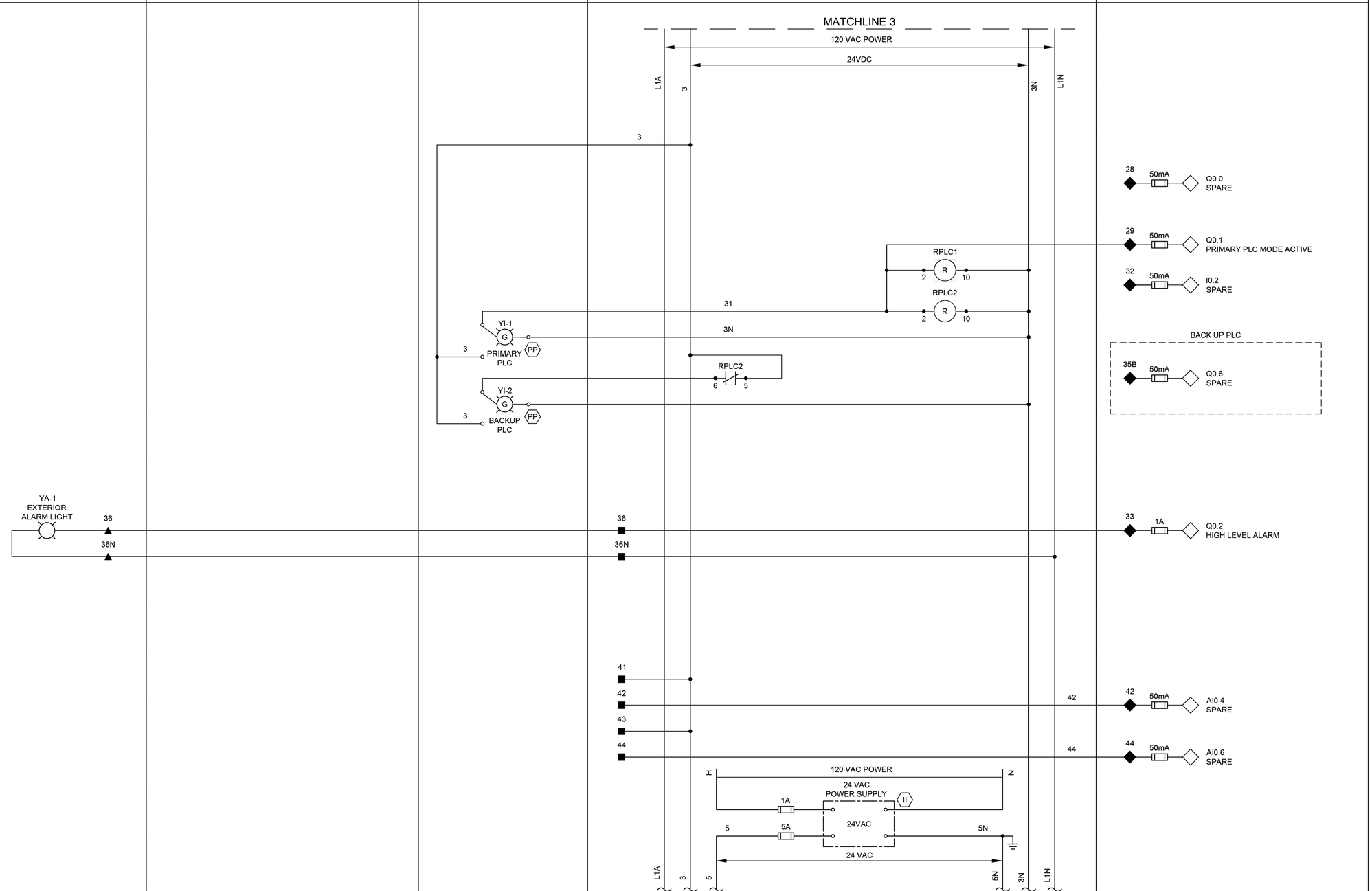

GENERAL NOTES:

1. NO ELECTRICAL MATERIAL, APPARATUS, DEVICES, APPLIANCES, FIXTURES, OR EQUIPMENT SHALL BE SOLD OR INSTALLED IN THE CITY UNLESS THEY ARE IN CONFORMANCE WITH THE PROVISIONS OF SECTION 508 CITY OF HOUSTON ELECTRICAL CODE, THE LAWS OF THE STATE OF TEXAS AND ANY APPLICABLE RULES AND REGULATIONS ISSUED UNDER THE AUTHORITY OF THE STATE STATUES. THE MAKER'S NAME, TRADEMARK, OR OTHER IDENTIFICATION SYMBOL SHALL BE PLACED ON ALL ELECTRICAL MATERIALS, APPARATUS, DEVICES, APPLIANCES, FIXTURES, AND EQUIPMENT USED OR INSTALLED UNDER THE PROVISIONS OF THIS CODE. ALL ELECTRICAL MATERIALS AND EQUIPMENT SHALL BE LISTED AND LABELED FOR THE INTENDED USE AND SHALL BE INCLUDED IN A LIST PUBLISHED BY AN APPROVAL AGENCY.

LEGEND

- △ DEVICE OR FIELD TERMINAL LOCATED AT MOTOR
- ✳ DEVICE OR FIELD TERMINAL LOCATED REMOTE
- □ DEVICE OR FIELD TERMINAL LOCATED AT MCC/POWER PANEL
- ■ FIELD TERMINAL LOCATED AT CONTROL PANEL
- ▲ REMOTE TERMINAL
- ● DEVICE TERMINAL NO.
- ◆ PLC INTERFACE TERMINAL

NO.	DATE	REVISION	APP.

FOR INTERIM REVIEW
ONLY NOT INTENDED FOR
PERMIT, BIDDING OR
CONSTRUCTION PURPOSES.
ENGINEER:
HOSS FOROUZAN
P.E. SERIAL NO.77748
05/18/2026

GAI
Gupta & Associates, Inc
CONSULTING ENGINEERING
Registration No. F-2593
302 Dennis St.,
Houston, Texas 77006
Tel: 713-636-2936
Fax: 713-636-2987
email: hforouzan@gaiconsulting.com

IDS Engineering Group
13430 NW. Freeway
Suite 700
Houston, Tx. 77040
713.462.3178
TxEng Firm 2726
TxSurv Firm 10110700

CITY OF HOUSTON
HOUSTON PUBLIC WORKS

LIFT STATION RENEWAL AND REPLACEMENT FY 2023

MARKET ST. NO.2 LIFT STATION CONTROL PANEL CONTROL WIRING DIAGRAM–IV

WBS NUMBER	FOR CITY OF HOUSTON USE ONLY
R–000267–0179–4	
DRAWING SCALE	
HORIZ: NONE VERT: NONE	
CITY OF HOUSTON PM	
NAWARAJ PANTA, P.E.	
SHEET NO. 219 OF 361	

DWG. NO.
MKT–I–11

IDS JOB No. 0057-085-00

PLOTTED: 5/12/2026 8:56 PM

FILE PATH: O:\H8108_Lift Station Rehabilitation And Reconstruction (IDS)\6 Drawings\Instrumentation And Control\Working\Market St. #2\H8108_MKT-I-12.dwg

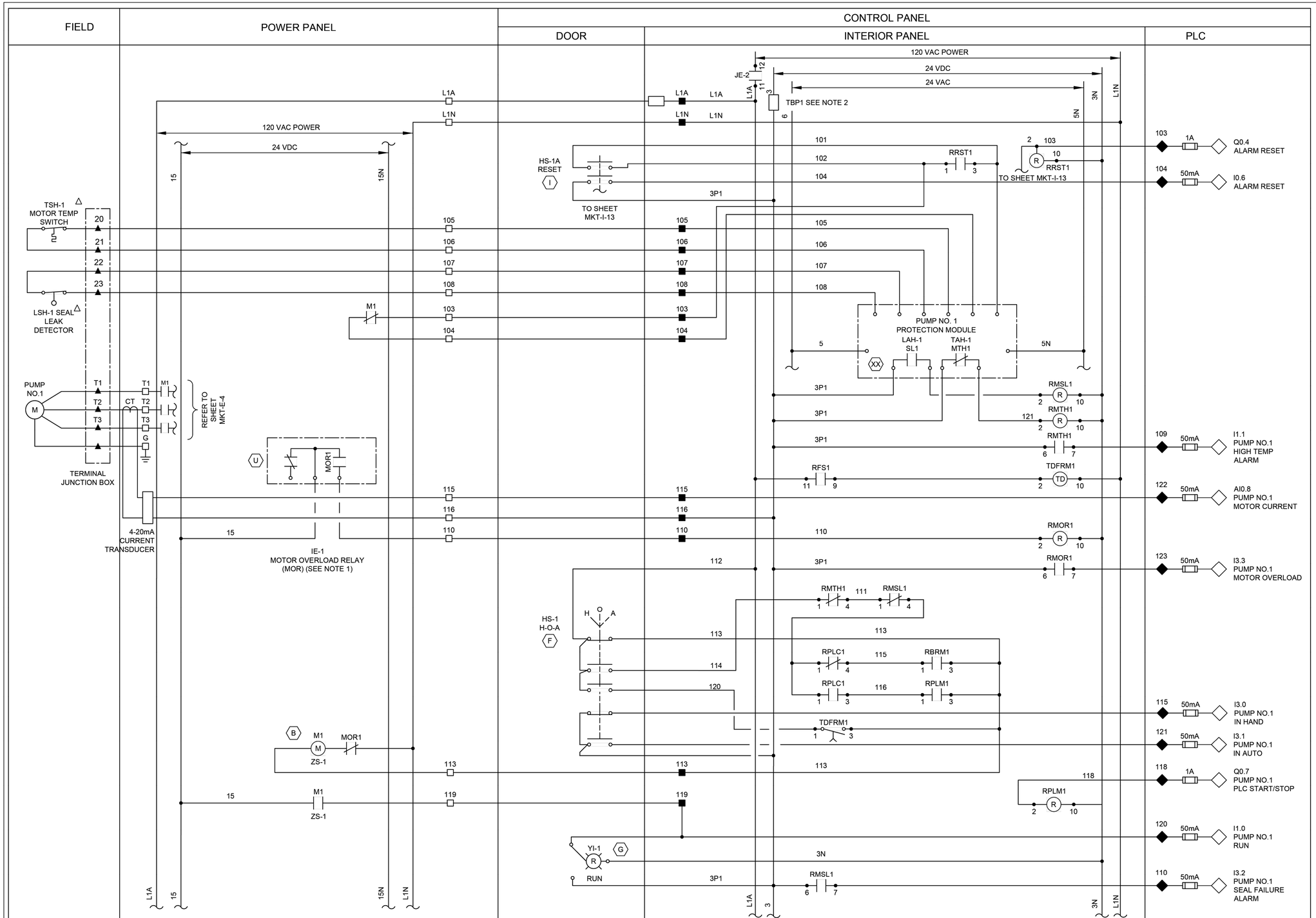

LEGEND

- △ DEVICE OR FIELD TERMINAL LOCATED AT MOTOR
- ✳ DEVICE OR FIELD TERMINAL LOCATED REMOTE
- □ DEVICE OR FIELD TERMINAL LOCATED AT MCC/POWER PANEL
- ■ FIELD TERMINAL LOCATED AT CONTROL PANEL
- ▲ REMOTE TERMINAL
- ● DEVICE TERMINAL NO.
- ◆ PLC INTERFACE TERMINAL

NOTES:

1. MOTOR OVERLOAD RELAY OUTPUT CONTACT SHOWN NORMALLY CLOSED WHEN RELAY IS DE-ENERGIZED, OPEN WHEN ENERGIZED, AND CLOSED WHEN IN ALARM. VERIFY OPERATION OF RELAY PROVIDED AND ADJUST CONNECTION OF RMOR AUXILIARY RELAYS.
2. FUSED TERMINAL ON TERMINAL BLOCK TB4 SEE CONTROL POWER AND COMMUNICATION WIRING DIAGRAM DRAWING NO. MKT-I-3.
3. ALL FLOAT CONTROL CIRCUIT WIRES COLOR SHALL BE YELLOW.

GENERAL NOTES:

1. NO ELECTRICAL MATERIAL, APPARATUS, DEVICES, APPLIANCES, FIXTURES, OR EQUIPMENT SHALL BE SOLD OR INSTALLED IN THE CITY UNLESS THEY ARE IN CONFORMANCE WITH THE PROVISIONS OF SECTION 508 CITY OF HOUSTON ELECTRICAL CODE, THE LAWS OF THE STATE OF TEXAS AND ANY APPLICABLE RULES AND REGULATIONS ISSUED UNDER THE AUTHORITY OF THE STATE STATUES. THE MAKER'S NAME, TRADEMARK, OR OTHER IDENTIFICATION SYMBOL SHALL BE PLACED ON ALL ELECTRICAL MATERIALS, APPARATUS, DEVICES, APPLIANCES, FIXTURES, AND EQUIPMENT USED OR INSTALLED UNDER THE PROVISIONS OF THIS CODE. ALL ELECTRICAL MATERIALS AND EQUIPMENT SHALL BE LISTED AND LABELED FOR THE INTENDED USE AND SHALL BE INCLUDED IN A LIST PUBLISHED BY AN APPROVAL AGENCY.

NO.	DATE	REVISION	APP.

FOR INTERIM REVIEW
ONLY NOT INTENDED FOR
PERMIT, BIDDING OR
CONSTRUCTION PURPOSES.
ENGINEER:
HOSS FOROUZAN
P.E. SERIAL NO.77748
05/18/2026

GAI
Gupta & Associates, Inc
CONSULTING ENGINEERING
Registration No. F-2593
302 Dennis St.,
Houston, Texas 77006
Tel: 713-636-2936
Fax: 713-636-2987
email: hforouzan@gaiconsulting.com

IDS Engineering Group
13430 NW. Freeway
Suite 700
Houston, Tx. 77040
713.462.3178
TxEng Firm 2726
TxSurv Firm 10110700

CITY OF HOUSTON
HOUSTON PUBLIC WORKS

LIFT STATION RENEWAL
AND REPLACEMENT FY 2023

MARKET ST. NO.2 LIFT STATION PUMP NO.1 CONTROL WIRING DIAGRAM

WBS NUMBER	FOR CITY OF HOUSTON USE ONLY
R-000267-0179-4	
DRAWING SCALE	
HORIZ: NONE VERT: NONE	
CITY OF HOUSTON PM	
NAWARAJ PANTA, P.E.	
DWG. NO. MKT-I-12	SHEET NO. 220 OF 361

IDS JOB No. 0057-085-00

PLOTTED: 5/12/2026 8:56 PM

FILE PATH: O:\H8108_Lift Station Rehabilitation And Reconstruction (IDS)\6 Drawings\Instrumentation And Control\Working\Market St. #2\H8108_MKT-I-13.dwg

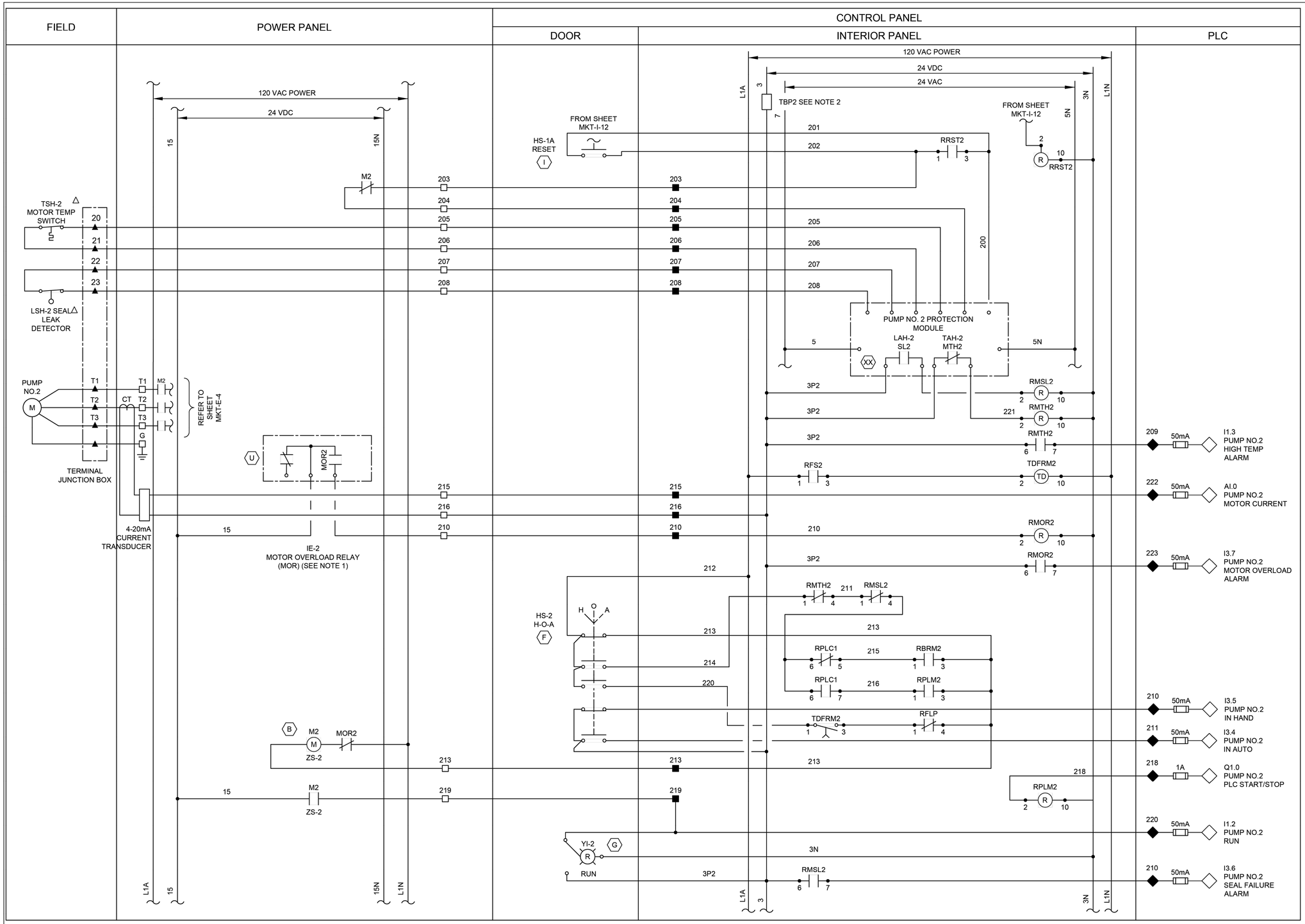

LEGEND

- △ DEVICE OR FIELD TERMINAL LOCATED AT MOTOR
- ✳ DEVICE OR FIELD TERMINAL LOCATED REMOTE
- □ DEVICE OR FIELD TERMINAL LOCATED AT MCC/POWER PANEL
- ■ FIELD TERMINAL LOCATED AT CONTROL PANEL
- ▲ REMOTE TERMINAL
- ● DEVICE TERMINAL NO.
- ◆ PLC INTERFACE TERMINAL

NOTES:

1. MOTOR OVERLOAD RELAY OUTPUT CONTACT SHOWN NORMALLY CLOSED WHEN RELAY IS DE-ENERGIZED, OPEN WHEN ENERGIZED, AND CLOSED WHEN IN ALARM. VERIFY OPERATION OF RELAY PROVIDED AND ADJUST CONNECTION OF RMOR AUXILIARY RELAYS.
2. FUSED TERMINAL ON TERMINAL BLOCK TB4 SEE CONTROL POWER AND COMMUNICATION WIRING DIAGRAM DRAWING NO. MKT-I-3.
3. ALL FLOAT CONTROL CIRCUIT WIRES COLOR SHALL BE YELLOW.

GENERAL NOTES:

1. NO ELECTRICAL MATERIAL, APPARATUS, DEVICES, APPLIANCES, FIXTURES, OR EQUIPMENT SHALL BE SOLD OR INSTALLED IN THE CITY UNLESS THEY ARE IN CONFORMANCE WITH THE PROVISIONS OF SECTION 508 CITY OF HOUSTON ELECTRICAL CODE, THE LAWS OF THE STATE OF TEXAS AND ANY APPLICABLE RULES AND REGULATIONS ISSUED UNDER THE AUTHORITY OF THE STATE STATUES. THE MAKER'S NAME, TRADEMARK, OR OTHER IDENTIFICATION SYMBOL SHALL BE PLACED ON ALL ELECTRICAL MATERIALS, APPARATUS, DEVICES, APPLIANCES, FIXTURES, AND EQUIPMENT USED OR INSTALLED UNDER THE PROVISIONS OF THIS CODE. ALL ELECTRICAL MATERIALS AND EQUIPMENT SHALL BE LISTED AND LABELED FOR THE INTENDED USE AND SHALL BE INCLUDED IN A LIST PUBLISHED BY AN APPROVAL AGENCY.

NO.	DATE	REVISION	APP.

FOR INTERIM REVIEW
ONLY NOT INTENDED FOR
PERMIT, BIDDING OR
CONSTRUCTION PURPOSES.
ENGINEER:
HOSS FOROUZAN
P.E. SERIAL NO.77748
05/18/2026

GAI
Gupta & Associates, Inc.
CONSULTING ENGINEERING
Registration No. F-2593
302 Dennis St.,
Houston, Texas 77006
Tel: 713-636-2936
Fax: 713-636-2987
email: hforouzan@gaiconsulting.com

IDS Engineering Group
13430 NW. Freeway
Suite 700
Houston, Tx. 77040
713.462.3178
TxEng Firm 2726
TxSurv Firm 10110700

CITY OF HOUSTON
HOUSTON PUBLIC WORKS

LIFT STATION RENEWAL
AND REPLACEMENT FY 2023

MARKET ST. NO.2 LIFT STATION PUMP NO.2 CONTROL WIRING DIAGRAM

WBS NUMBER	FOR CITY OF HOUSTON USE ONLY
R-000267-0179-4	
DRAWING SCALE	
HORIZ: NONE VERT: NONE	
CITY OF HOUSTON PM	
NAWARAJ PANTA, P.E.	
DWG. NO. MKT-I-13	SHEET NO. 221 OF 361

IDS JOB No. 0057-085-00

PLOTTED: 5/13/2026 6:41 PM

FILE PATH: \\idseg.com\FS\Projects\0000\005708500 CoH Lift Stations - FY 2023\CAD\DWG\PRODUCTION\222-MUD No 67 SITE PLAN OVERALL.dwg

LEGEND

- EXISTING CONCRETE PAVEMENT
- EXISTING CONCRETE SIDEWALK
- LIDAR CONTOUR DATED 2018

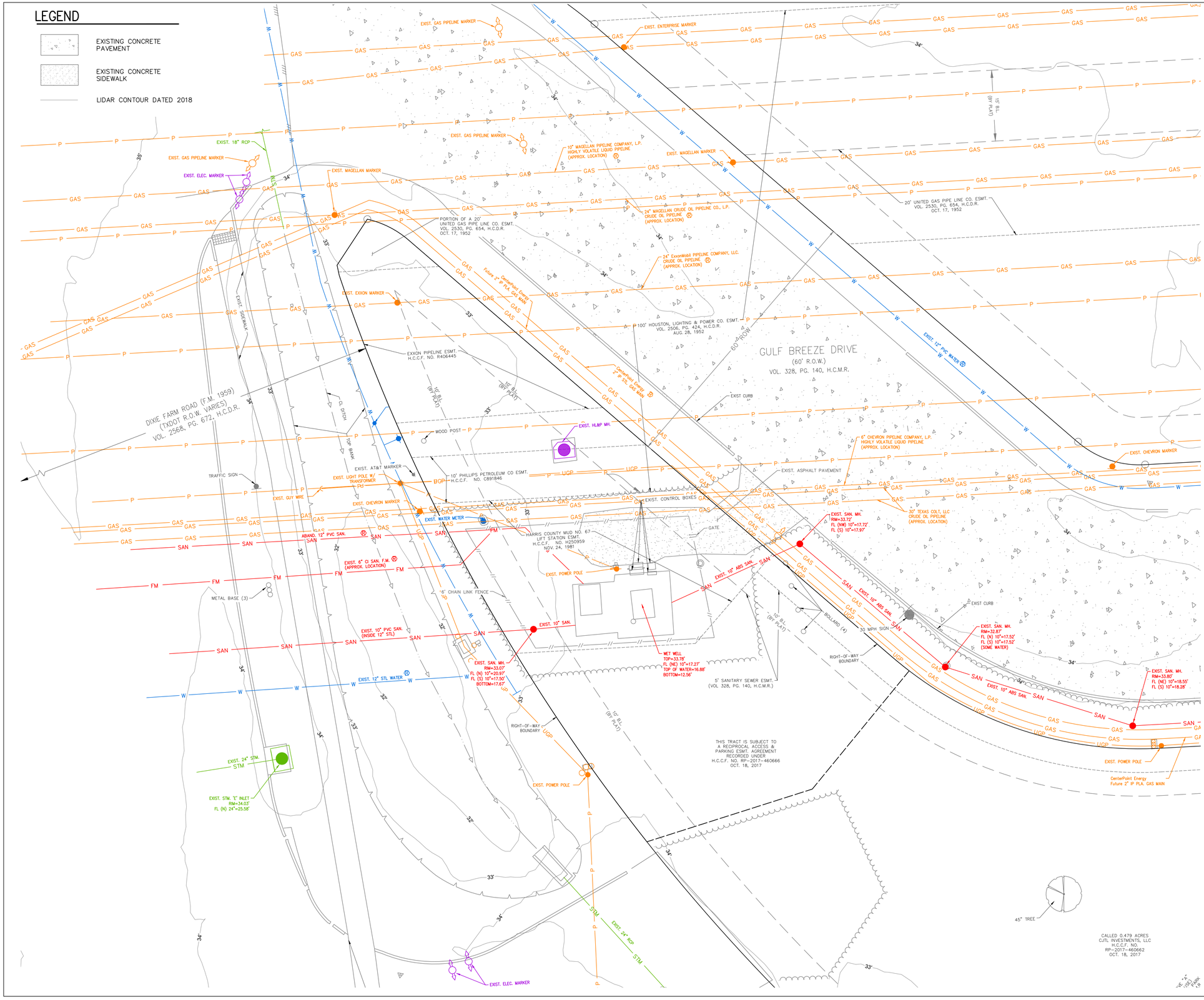

SCALE 1"=10'

NO.	DATE	REVISION	APP.

BENCHMARK:

CITY OF HOUSTON MONUMENT 5850-7913 IS AN ALUMINUM DISC SET IN CONCRETE APPROXIMATELY 1920' NORTHWEST FROM THE INTERSECTION OF GULF FREEWAY AND DIXIE FARM ROAD.

ELEV. 29.92 FEET NAVD 1988, 2001 ADJUSTMENT (PROJECT DATUM)
ELEV. 28.13 FEET NAVD 1988, (GEOID 18')

FLOODPLAIN NOTE:

AS PER FIRM PANEL 48201C1060M DATED JANUARY 6, 2017. THIS TRACT LIES WITHIN THE UNSHADED ZONE X.
100-YR FLOODPLAIN ELEV. 30.40'
500-YR FLOODPLAIN ELEV. 31.50'
FIRM PANEL: 48201C1060M

EXISTING UTILITY NOTE:

EXISTING UNDERGROUND UTILITY INFORMATION (TYPE, SIZE & OWNERSHIP) ARE SHOWN APPROXIMATELY BASED ON THE AVAILABLE RECORD DRAWINGS AND FIELD VERIFICATION (WHERE FEASIBLE) WITHOUT PROBING AND EXCAVATION. NO WARRANTY IS MADE AS TO THE ACCURACY OR COMPLETENESS OF UTILITY LOCATION SHOWN ON THE DRAWING. CAUTION SHOULD BE EXERCISED WHEN EXCAVATING OR BORE AND JACKING IN THE VICINITY OF UNDERGROUND UTILITIES. OWNERS OF THE UTILITIES SHOULD BE NOTIFIED PRIOR TO SUCH ACTIVITIES. CALL UTILITY COORDINATING COMMITTEE AT 713-223-4567, AT LEAST 48 HOURS PRIOR TO EXCAVATING IN THE STREET RIGHT-OF-WAY.

NOTICE:
FOR YOUR SAFETY, YOU ARE REQUIRED BY TEXAS LAW TO CALL 811 AT LEAST 48 HOURS BEFORE YOU DIG SO THAT UNDERGROUND LINES CAN BE MARKED. THIS SIGNATURE DOES NOT FULFILL YOUR OBLIGATION TO CALL 811

VERIFICATION OF PRIVATE UTILITY LINES

Date

CenterPoint Energy natural gas utilities shown. (Gas service lines are not shown). This signature not be used for conflict verification.

Signature valid for six months.

Date

CenterPoint Energy/UNDERGROUND Electrical Facilities Verification ONLY. (This signature verifies existing underground facilities – not to be used for conflict verification)

Signature valid for six months.

Date

Approved for AT&T underground conduit facilities only.
Signature valid for one year.

IDS Engineering Group
13430 NW. Freeway, Suite 700
Houston, Tx. 77040
713.462.3178
TxEng Firm 2726 | TxSurv Firm 10110700

THIS DOCUMENT IS RELEASED FOR THE PURPOSE OF REVIEW UNDER THE AUTHORITY OF MARCEL KHOUW, P.E. 101807 ON 05/27/2026. IT IS NOT TO BE USED FOR CONSTRUCTION PURPOSES.

SURVEYED BY: KUO & ASSOCIATES, INC.
TBPE FIRM #F-4578; TBPLS FIRM #1007560

CITY OF HOUSTON
HOUSTON PUBLIC WORKS

LIFT STATION RENEWAL AND REPLACEMENT FY 2023

MUD NO. 67 LIFT STATION EXISTING SITE PLAN

WBS NUMBER	FOR CITY OF HOUSTON USE ONLY
R-000267-0179-4	
DRAWING SCALE	
HORIZ: 1" = 10' VERT: N/A	
CITY OF HOUSTON PM	
NAWARAJ PANTA, P.E.	

DWG. NO.	SHEET NO. 222 OF 361
MUD-C-01	

PLOTTED: 5/13/2026 6:41 PM

LEGEND

- EXISTING CONCRETE PAVEMENT
- REMOVE EXISTING CONCRETE PAVEMENT
- SITE DEMOLITION
- EXISTING CONCRETE SIDEWALK
- REMOVE EXISTING CONCRETE SIDEWALK
- LIFT STATION PARTIAL DEMOLITION (SEE NOTE 1)
- ABANDON ANY UNDERGROUND UTILITY
- REMOVE ANY UNDERGROUND UTILITY
- REMOVE EXISTING FENCE
- FILTER FABRIC FENCE
- PROP. CLEARING AND GRUBBING
- ROCK FILTER DAM
- CONCRETE TRUCK WASHOUT
  - CONTRACTOR TOO PLACE CTW AS NECESSARY WITHIN COH PROPERTY OR EASEMENTS AS APPROVED BY PROJECT MANAGER

NOTES:

1. EXISTING LIFT STATION WET WELL TO REMAIN.
2. SEE ELECTRICAL PLANS ON DWG, NO.'S MUD-E-01 THROUGH MUD-I-13 FOR ELECTRICAL IMPROVEMENTS.
3. CONTRACTOR SHALL COORDINATE WITH CENTERPOINT ENERGY TO DE-ENERGIZE THE LIFT STATION AND OTHER ELECTRICAL EQUIPMENT ON SITE.
4. CONTRACTOR SHALL PROTECT THE EXISTING CONDUIT AND CABLE. IF CABLE OR CONDUIT IS DAMAGED CONTRACTOR SHALL REPLACE AT NO ADDITIONAL COST TO THE CITY.
5. REMOVE THE EXISTING FORCE MAIN TO THE NEAREST PIPE JOINT AND TIE PROPOSED FORCE MAIN TO EXISTING USING RESTRAINED JOINTS.
6. THE EXISTING FORCE MAIN IS ASSUMED TO BE DUCTILE IRON BELL AND SPIGOT AND SHALL BE FIELD VERIFIED BY THE CONTRACTOR.
7. CONTRACTOR SHALL NOT STORE MATERIAL, EQUIPMENT, OR PERFORM ANY WORK WITHIN THE EXISTING CENTERPOINT ENERGY AND GAS PIPELINE CORRIDOR.
8. THE CITY OF HOUSTON WILL RETAIN SALVAGE RIGHTS TO ALL MATERIAL AND EQUIPMENT. ALL MATERIALS AND EQUIPMENT RETAINED BY THE CITY OF HOUSTON SHALL BE DELIVERED TO A POINT DESIGNATED BY CITY OF HOUSTON REPRESENTATIVE (MR. ARTURO CARRILLO 832-395-3558). ANY MATERIAL OR EQUIPMENT NOT RETAINED BY THE CITY OF HOUSTON SHALL BE REMOVED FROM THE SITE AND DISPOSED OF BY THE CONTRACTOR IN ACCORDANCE WITH APPLICABLE REGULATIONS.
9. CONTRACTOR TO SAW-CUT, REMOVE, AND REPLACE CONCRETE AS NECESSARY. NO SEPARATE PAY.
10. FOR REQUIRED STORMWATER POLLUTION PREVENTION PLAN MEASURES ON PROPOSED INLETS, SEE DRAINAGE PLAN.

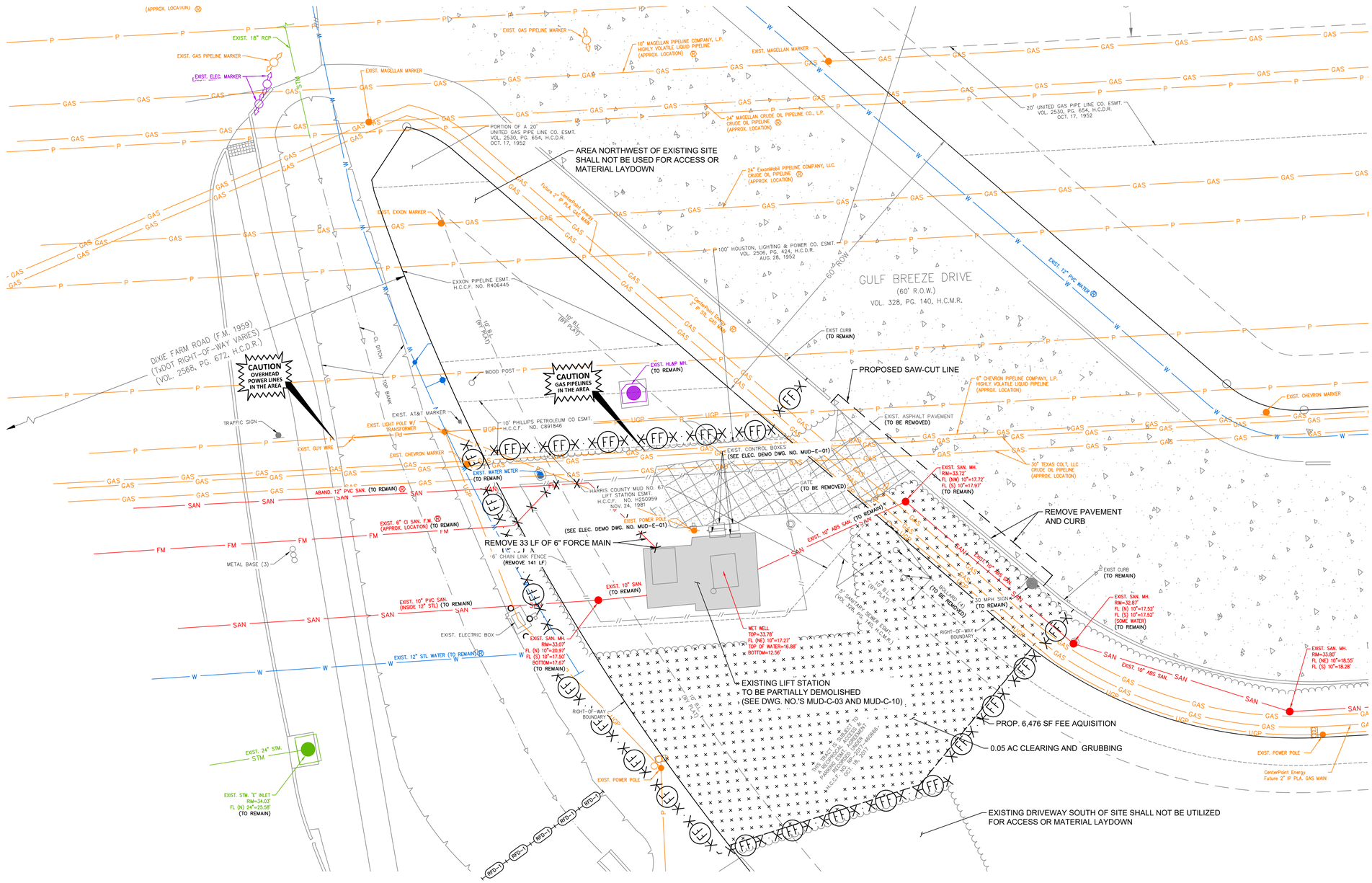

10' 0' 10'
SCALE
1"=10'

NO.	DATE	REVISION	APP.

BENCHMARK:

CITY OF HOUSTON MONUMENT 5850-7913 IS AN ALUMINUM DISC SET IN CONCRETE APPROXIMATELY 1920' NORTHWEST FROM THE INTERSECTION OF GULF FREEWAY AND DIXIE FARM ROAD.

ELEV. 29.92 FEET NAVD 1988, 2001 ADJUSTMENT (PROJECT DATUM)
ELEV. 28.13 FEET NAVD 1988, (GEOID 18')

FLOODPLAIN NOTE:

AS PER FIRM PANEL 48201C1060M DATED JANUARY 6, 2017. THIS TRACT LIES WITHIN THE UNSHADED ZONE X.
100-YR FLOODPLAIN ELEV. 30.40'
500-YR FLOODPLAIN ELEV. 31.50'
FIRM PANEL: 48201C1060M

EXISTING UTILITY NOTE:

EXISTING UNDERGROUND UTILITY INFORMATION (TYPE, SIZE & OWNERSHIP) ARE SHOWN APPROXIMATELY BASED ON THE AVAILABLE RECORD DRAWINGS AND FIELD VERIFICATION (WHERE FEASIBLE) WITHOUT PROBING AND EXCAVATION. NO WARRANTY IS MADE AS TO THE ACCURACY OR COMPLETENESS OF UTILITY LOCATION SHOWN ON THE DRAWING. CAUTION SHOULD BE EXERCISED WHEN EXCAVATING OR BORE AND JACKING IN THE VICINITY OF UNDERGROUND UTILITIES. OWNERS OF THE UTILITIES SHOULD BE NOTIFIED PRIOR TO SUCH ACTIVITIES. CALL UTILITY COORDINATING COMMITTEE AT 713-223-4567, AT LEAST 48 HOURS PRIOR TO EXCAVATING IN THE STREET RIGHT-OF-WAY.

NOTICE:
FOR YOUR SAFETY, YOU ARE REQUIRED BY TEXAS LAW TO CALL 811 AT LEAST 48 HOURS BEFORE YOU DIG SO THAT UNDERGROUND LINES CAN BE MARKED. THIS SIGNATURE DOES NOT FULFILL YOUR OBLIGATION TO CALL 811

VERIFICATION OF PRIVATE UTILITY LINES

Date

CenterPoint Energy natural gas utilities shown. (Gas service lines are not shown). This signature not be used for conflict verification.

Signature valid for six months.

Date

CenterPoint Energy/UNDERGROUND Electrical Facilities Verification ONLY. (This signature verifies existing underground facilities – not to be used for conflict verification)

Signature valid for six months.

Date

Approved for AT&T underground conduit facilities only.
Signature valid for one year.

IDS Engineering Group
13430 NW. Freeway, Suite 700
Houston, Tx. 77040
713.462.3178
TxEng Firm 2726 | TxSurv Firm 10110700

SURVEYED BY: KUO & ASSOCIATES, INC.
TBPE FIRM #F-4578; TBPLS FIRM #1007560

THIS DOCUMENT IS RELEASED FOR THE PURPOSE OF REVIEW UNDER THE AUTHORITY OF MARCEL KHOUW, P.E. 101807 ON 05/27/2026. IT IS NOT TO BE USED FOR CONSTRUCTION PURPOSES.

CITY OF HOUSTON
HOUSTON PUBLIC WORKS

LIFT STATION RENEWAL AND REPLACEMENT FY 2023

MUD NO. 67 LIFT STATION SITE DEMOLITION PLAN AND SWPPP

WBS NUMBER	FOR CITY OF HOUSTON USE ONLY
R-000267-0179-4	
DRAWING SCALE	
HORIZ: 1" = 10' VERT: N/A	
CITY OF HOUSTON PM	
NAWARAJ PANTA, P.E.	

DWG. NO.	SHEET NO.
MUD-C-02	223 OF 361

FILE PATH: \\idseg.com\FS\Projects\0000\005708500 CoH Lift Stations - FY 2023\CAD\DWG\PRODUCTION\223-MUD No 67 SITE PLAN AND DEMO.dwg

PLOTTED: 5/14/2026 3:34 PM

LIFT STATION DEMOLITION AND ABANDONMENT NOTES:

1. THIS DRAWING IS A REPRODUCTION OF THE EXISTING LIFT STATION CONSTRUCTION DRAWINGS AND INTENDED TO PROVIDE GENERAL INFORMATION FOR STATION DEMOLITION. THE CONTRACTOR IS RESPONSIBLE FOR DETERMINING THE ACTUAL WORK REQUIRED FOR DEMOLITION AND REMOVAL OF STRUCTURAL, MECHANICAL, AND ELECTRICAL COMPONENTS. A CLAIM FOR CHANGED CONDITIONS BETWEEN THE EXISTING CONDITIONS AND THE RECORD DRAWINGS WILL NOT BE CONSIDERED.
2. NO DEMOLITION IS TO BE PERFORMED UNTIL BYPASS PUMPING HAS BEEN INSTALLED AND OPERATIONAL.
3. THE CITY OF HOUSTON WILL RETAIN SALVAGE RIGHTS TO ALL MATERIAL AND EQUIPMENT. ALL MATERIALS AND EQUIPMENT RETAINED BY THE CITY OF HOUSTON SHALL BE DELIVERED TO A POINT DESIGNATED BY CITY OF HOUSTON REPRESENTATIVE (MR. ARTURO CARRILLO 832-395-3558). ANY MATERIAL OR EQUIPMENT NOT RETAINED BY THE CITY OF HOUSTON SHALL BE REMOVED FROM THE SITE AND DISPOSED OF BY THE CONTRACTOR IN ACCORDANCE WITH APPLICABLE REGULATIONS.
4. WHEN REMOVING EXISTING PUMPS, CONTRACTOR SHALL LEAVE AS MUCH WIRE/CABLE AS POSSIBLE IN ORDER FOR THE CITY TO REUSE THE PUMPS.
5. CONTRACTOR SHALL NOTIFY TEXAS DEPARTMENT OF HEALTH (DEPARTMENT) ON A FORM SPECIFIED BY THE DEPARTMENT OF ANY ASBESTOS ABATEMENT ACTIVITY, RENOVATION OR OPERATIONS AND MAINTENANCE ACTIVITY AFFECTING ASBESTOS-CONTAINING BUILDING MATERIALS, OR ANY DEMOLITION IN FACILITIES OR PUBLIC BUILDINGS.
6. CONCRETE SLAB AND WALLS INDICATED ON THIS PLAN SHALL BE REMOVED TO 5 FEET BELOW FINISHED GRADE AS PER SPECIFICATION SECTION 02220.
7. ALL REMAINING WALL OPENINGS IN THE VALVE VAULT SHALL BE SEALED WITH NON-SHRINK GROUT.
8. CONTRACTOR SHALL BACKFILL THE ABANDONED AND DEMOLISHED VALVE VAULT. BACKFILL SHALL BE SUITABLE FILL AND FLOWABLE FILL AS SHOWN AND COMPACTED PROPERLY UP TO THE PROPOSED CONCRETE DISCHARGE ASSEMBLY PAD.
9. THE CONTRACTOR SHALL COORDINATE WITH CENTERPOINT ENERGY TO TEMPORARILY DISCONNECT ELECTRICAL POWER AS NEEDED.
10. THE EXISTING WET WELL SHALL BE CLEANED OF ALL DEBRIS, WASTEWATER AND OTHER RESIDUES BY AN APPROVED CITY OF HOUSTON DISPOSAL CONTRACTOR.
11. THE CONTRACTOR SHALL DISPOSE OF ANY LIQUID OR SOLID WASTE FOUND IN THE WET WELL AT A DISPOSAL FACILITY LICENSED AND APPROVED BY THE STATE OF TEXAS. THE CONTRACTOR SHALL BE RESPONSIBLE FOR THE COST OF TRANSPORTATION, DISPOSAL AND TESTING REQUIRED BY STATE AND FEDERAL REGULATORY AGENCIES, AND BY THE DISPOSAL FACILITY.
12. PRIOR TO THE CLEAN-OUT AND CLEANING OF THE EXISTING LIFT STATION WET WELL, CONTRACTOR TO SUBMIT PROOF TO C.O.H. CONSTRUCTION PM THAT TRANSPORTER/HAULER TO BE USED FOR THE TRANSPORT OF THE CONTENTS OF THE WET WELL (I.E., SOLIDS, GRIT, SEWAGE SLUDGE, AND DOMESTIC SLUDGE, ETC.) IS REGISTERED BY THE TEXAS COMMISSION ON ENVIRONMENTAL QUALITY (TCEQ) AS A SLUDGE TRANSPORTER AND THE TRANSPORTER'S REGISTRATION IS CURRENT AND VALID DURING THE PERIOD OF PERFORMANCE.
13. CONTRACTOR SHALL SUBMIT PROOF OF SUBMISSION OF REQUIRED ASBESTOS/DEMOLITION NOTIFICATION FORM TO THE TEXAS DEPARTMENT OF STATE HEALTH SERVICES TO C.O.H. CONSTRUCTION PM. THE NOTIFICATION TO THE STATE MUST BE PROVIDED A MINIMUM OF 10 DAYS PRIOR TO THE STARTUP OF ANY DEMOLITION ACTIVITIES AT THE SITE.
14. CONTRACTOR SHALL OBTAIN CITY OF HOUSTON DEMOLITION PERMIT (SEE FORM CE 1075 REV. 01/01/2015 FOR GUIDELINES) OR SUBMIT PROOF OF NON-APPLICABILITY TO C.O.H. CONSTRUCTION PROJECT MANAGER PRIOR TO THE STARTUP OF DEMOLITION ACTIVITIES AT THE SITE. THE CONTRACTOR SHALL OBTAIN ANY STATE DEMOLITION PERMITS REQUIRED.

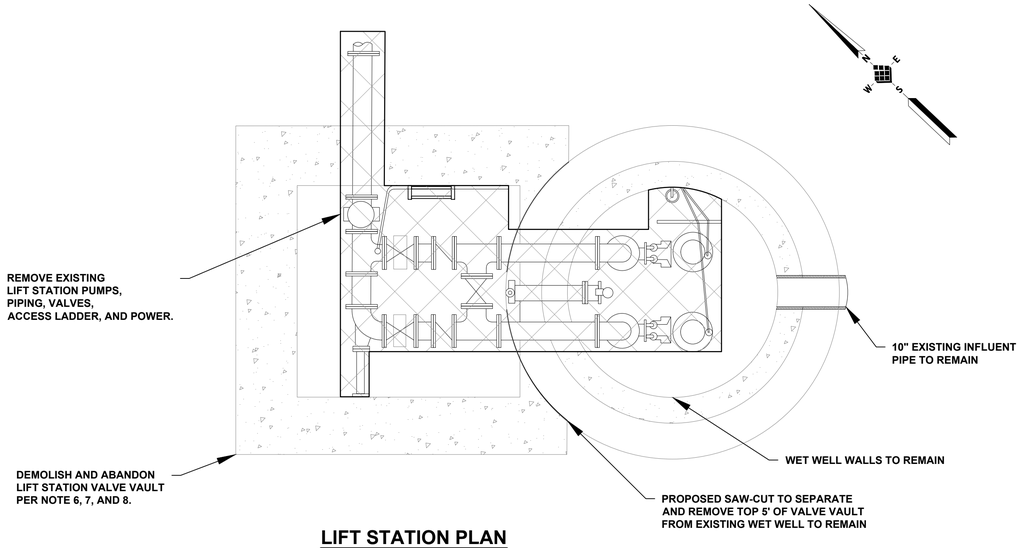

LIFT STATION PLAN

SCALE: N.T.S.

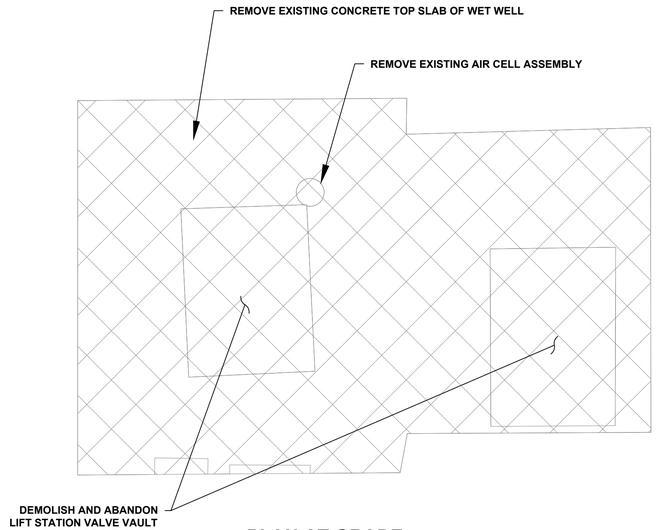

PLAN AT GRADE

SCALE: N.T.S.

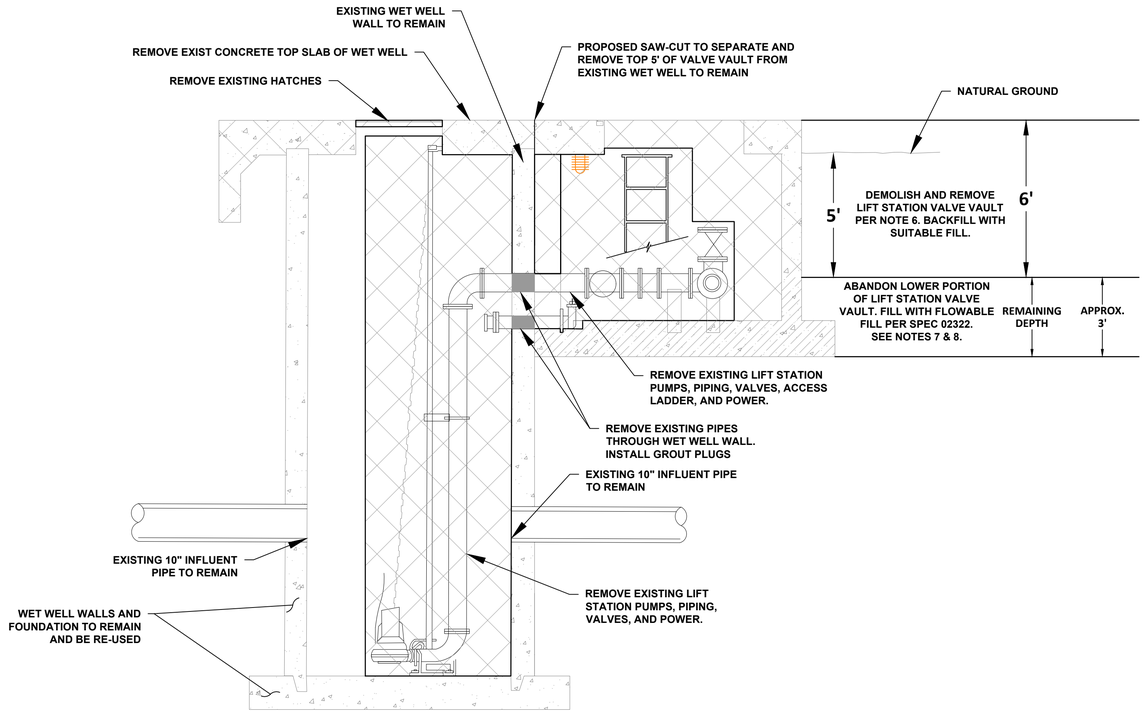

LIFT STATION SECTION

SCALE: N.T.S.

LEGEND

DEMOLITION AREA

ABANDON VALVE VAULT

NO.	DATE	REVISION	APP.

IDS Engineering Group
13430 NW. Freeway, Suite 700
Houston, Tx. 77040
713.462.3178
TxEng Firm 2726 | TxSurv Firm 10110700

SURVEYED BY: KUO & ASSOCIATES, INC.
TBPE FIRM #F-4578; TBPLS FIRM #1007560

THIS DOCUMENT IS RELEASED FOR THE PURPOSE OF REVIEW UNDER THE AUTHORITY OF MARCEL KHOUW. P.E. 101807 ON 05/27/2026. IT IS NOT TO BE USED FOR CONSTRUCTION PURPOSES.

CITY OF HOUSTON
HOUSTON PUBLIC WORKS

LIFT STATION RENEWAL AND REPLACEMENT FY 2023

MUD NO. 67 LIFT STATION SECTION DEMOLITION

WBS NUMBER	FOR CITY OF HOUSTON USE ONLY
R-000267-0179-4	
DRAWING SCALE	
HORIZ: AS NOTED VERT: N/A	
CITY OF HOUSTON PM	
NAWARAJ PANTA, P.E.	
SHEET NO. 224 OF 361	

DWG. NO. MUD-C-03

FILE PATH: \\tdseg.com\FS\Projects\0000\005708500 CoH Lift Stations - FY 2023\CAD\DWG\PRODUCTION\224-MUD No 67 SECTION DEMO.dwg

PLOTTED: 5/13/2026 6:41 PM

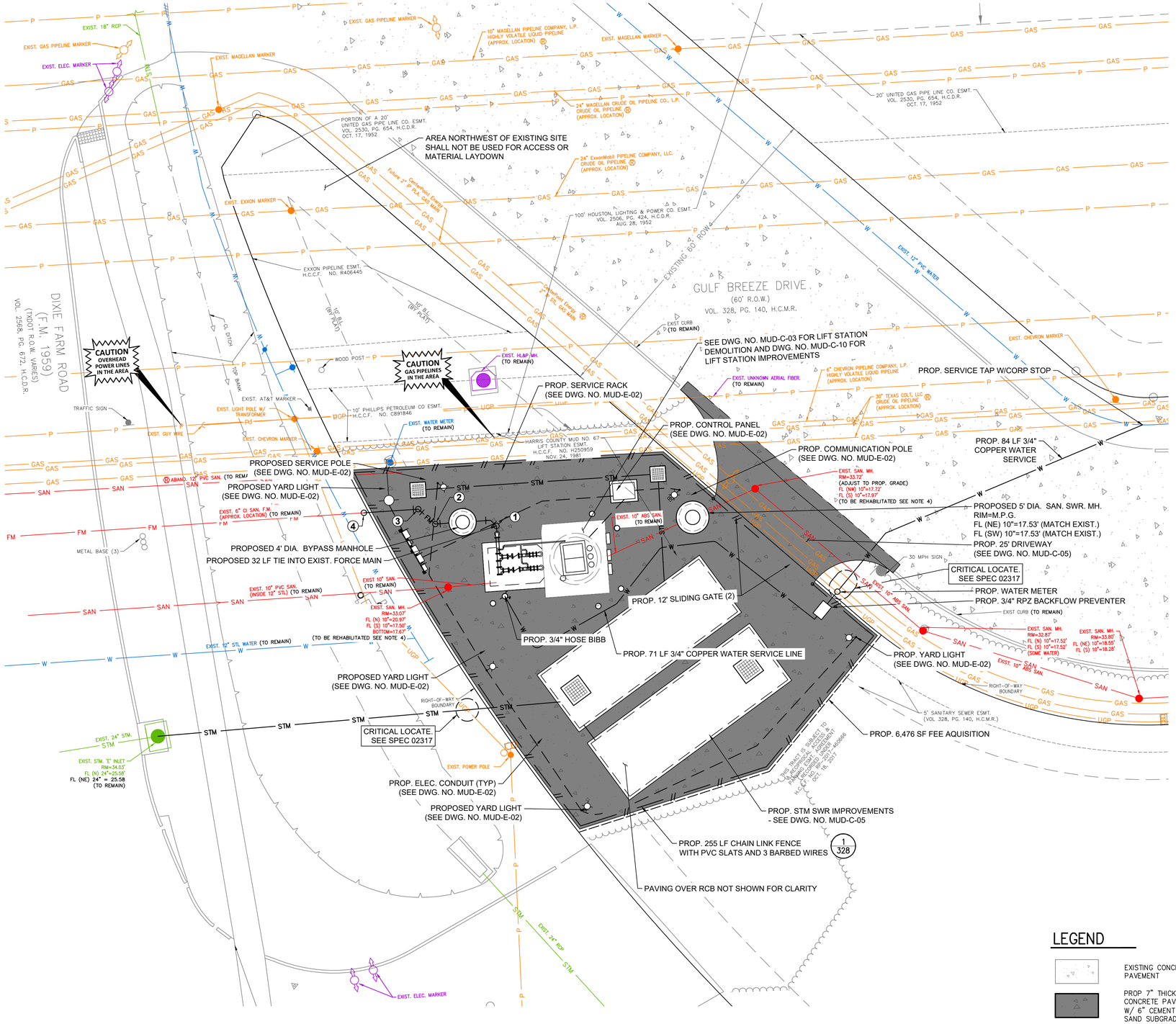

NOTES:

1. EXISTING LIFT STATION WET WELL TO REMAIN.
2. SEE ELECTRICAL PLANS ON DWG. NO.'S MUD-E-01 THROUGH MUD-I-13 FOR ELECTRICAL IMPROVEMENTS.
3. CONTRACTOR SHALL COORDINATE WITH CENTERPOINT ENERGY TO DE-ENERGIZE THE LIFT STATION AND OTHER ELECTRICAL EQUIPMENT ON SITE.
4. REMOVE EXISTING CEMENTITOUS LINER, REPAIR MANHOLE WALL AND RESTORE BENCH PER SPEC 02555, REPLACE MANHOLE FRAME, RING, AND COVER, AND RECOAT WITH A COH APPROVED MATERIAL PER SPEC 09901.
5. DOWEL INTO EXISTING PAVEMENT. USE 24" x #4 SMOOTH DOWELS AT 18" CENTER TO CENTER, CENTERED ON SAW-CUT.
6. SANITARY SEWER MANHOLES INSTALLED BELOW THE FLOODPLAIN ELEVATION SHALL HAVE WATERTIGHT MANHOLE FRAMES AND COVERS AS PER SPECIFICATION 02090.
7. CONTRACTOR SHALL FIELD VERIFY THE LOCATION OF THE HOLES DRILLED FOR THE RISER PIPE INSTALLATION THRU THE WET VAULT TOP SLAB.
8. REMOVE THE EXISTING FORCE MAIN TO THE NEAREST PIPE JOINT AND TIE PROP FORCE MAIN TO EXIST. USE RESTRAINED JOINTS.
9. THE EXISTING FORCE MAIN IS ASSUMED TO BE DUCTILE IRON BELL AND SPIGOT AND SHALL BE FIELD VERIFIED BY THE CONTRACTOR.
10. CONTOURS SHOWN ON THIS SHEET WERE DERIVED FROM 2018 HGAC LIDAR AND WERE USED TO CREATE EXISTING DRAINAGE AREAS SHOWN HERE.
11. CONTRACTOR TO PROTECT EXISTING CONDUIT AND CABLE. IF CABLE OR CONDUIT IS DAMAGED DURING CONSTRUCTION, CONTRACTOR SHALL REPLACE AT NO ADDITIONAL COST TO THE CITY.
12. YARD LIGHT POLES, ELECTRICAL & COMMUNICATION POLES, AND SERVICE POLES SHALL BE ABLE TO WITHSTAND ULTIMATE DESIGN WIND SPEED OF 130 MPH, V(ULT).
13. COAT MANHOLE IN ACCORDANCE WITH SYSTEM 108 PER SPEC SECTION 09901 PART 2.03J.
12. CONTRACTOR TO SAW-CUT, REMOVE, AND REPLACE CONCRETE AS NECESSARY. NO SEPARATE PAY.
13. TS&V SHALL BE 5' MIN FROM TAPS, BELLS, FITTINGS, VALVES ETC. CONTRACTOR TO FIELD VERIFY TAPPING LOCATION PRIOR TO TAPPING OR METER INSTALLATION. IF ANY FITTINGS, VALVES, BELLS ETC. ARE FOUND WITHIN 5' CONTRACTOR TO CONTACT ENGINEER AND MAKE NECESSARY REVISIONS.
14. WATER LINE SHALL BE CONTINUOUS TYPE K COPPER TUBING.

10' 0' 10'
SCALE
1"=10'

BENCHMARK:

CITY OF HOUSTON MONUMENT 5850-7913 IS AN ALUMINUM DISC SET IN CONCRETE APPROXIMATELY 1920' NORTHWEST FROM THE INTERSECTION OF GULF FREEWAY AND DIXIE FARM ROAD.

ELEV. 29.92 FEET NAVD 1988, 2001 ADJUSTMENT (PROJECT DATUM)
ELEV. 28.13 FEET NAVD 1988, (GEOID 18')

FLOODPLAIN NOTE:

AS PER FIRM PANEL 48201C1060M DATED JANUARY 6, 2017. THIS TRACT LIES WITHIN THE UNSHADED ZONE X.
100-YR FLOODPLAIN ELEV. 30.40'
500-YR FLOODPLAIN ELEV. 31.50'
FIRM PANEL: 48201C1060M

EXISTING UTILITY NOTE:

EXISTING UNDERGROUND UTILITY INFORMATION (TYPE, SIZE & OWNERSHIP) ARE SHOWN APPROXIMATELY BASED ON THE AVAILABLE RECORD DRAWINGS AND FIELD VERIFICATION (WHERE FEASIBLE) WITHOUT PROBING AND EXCAVATION. NO WARRANTY IS MADE AS TO THE ACCURACY OR COMPLETENESS OF UTILITY LOCATION SHOWN ON THE DRAWING. CAUTION SHOULD BE EXERCISED WHEN EXCAVATING OR BORE AND JACKING IN THE VICINITY OF UNDERGROUND UTILITIES. OWNERS OF THE UTILITIES SHOULD BE NOTIFIED PRIOR TO SUCH ACTIVITIES. CALL UTILITY COORDINATING COMMITTEE AT 713-223-4567, AT LEAST 48 HOURS PRIOR TO EXCAVATING IN THE STREET RIGHT-OF-WAY.

PROPOSED POINT TABLE

POINT	NORTHING	EASTING	DESCRIPTION	ELEVATION
1	13782954.35	3182043.59	PROP. 6" 45° BEND	±30.23'
2	13782963.25	3182036.76	PROP. 6" 45° BEND	±30.23'
3	13782967.38	3182036.89	PROP. 6" 45° BEND	±30.23'
4	13782974.66	3182030.06	PROP. 6" TIE-IN (MATCH EXIST.)	±26.17'

LEGEND

- EXISTING CONCRETE PAVEMENT
- PROP 7" THICK CONCRETE PAVEMENT W/ 6" CEMENT STABILIZED SAND SUBGRADE
- EXISTING CONCRETE SIDEWALK
- DETAIL NO. SHEET NO.
- SAW-CUT CONCRETE

NOTICE:
FOR YOUR SAFETY, YOU ARE REQUIRED BY TEXAS LAW TO CALL 811 AT LEAST 48 HOURS BEFORE YOU DIG SO THAT UNDERGROUND LINES CAN BE MARKED. THIS SIGNATURE DOES NOT FULFILL YOUR OBLIGATION TO CALL 811

VERIFICATION OF PRIVATE UTILITY LINES

Date

CenterPoint Energy natural gas utilities shown. (Gas service lines are not shown). This signature not be used for conflict verification.

Signature valid for six months.

Date

CenterPoint Energy/UNDERGROUND Electrical Facilities Verification ONLY. (This signature verifies existing underground facilities – not to be used for conflict verification)

Signature valid for six months.

Date

Approved for AT&T underground conduit facilities only.
Signature valid for one year.

IDS Engineering Group
13430 NW. Freeway, Suite 700
Houston, Tx. 77040
713.462.3178
TxEng Firm 2726 | TxSurv Firm 10110700

SURVEYED BY: KUO & ASSOCIATES, INC.
TBPE FIRM #F-4578; TBPLS FIRM #1007560

THIS DOCUMENT IS RELEASED FOR THE PURPOSE OF REVIEW UNDER THE AUTHORITY OF MARCEL KHOUW, P.E. 101807 ON 05/27/2026. IT IS NOT TO BE USED FOR CONSTRUCTION PURPOSES.

CITY OF HOUSTON
HOUSTON PUBLIC WORKS

LIFT STATION RENEWAL AND REPLACEMENT FY 2023

MUD NO. 67 LIFT STATION PROPOSED SITE PLAN

WBS NUMBER	FOR CITY OF HOUSTON USE ONLY
R-000267-0179-4	
DRAWING SCALE	
HORIZ: 1" = 10' VERT: N/A	
CITY OF HOUSTON PM	
NAWARAJ PANTA, P.E.	
SHEET NO. 225 OF 361	

DWG. NO. MUD-C-04

NO.	DATE	REVISION	APP.

FILE PATH: \\idseg.com\FS\Projects\0000\005708500 CoH Lift Stations - FY 2023\CAD\DWG\PRODUCTION\225-MUD No 67 PROP SITE PLAN.dwg

PLOTTED: 5/13/2026 6:41 PM

FILE PATH: \\idseg.com\FS\Projects\0000\005708500 CoH Lift Stations - FY 2023\CAD\DWG\PRODUCTION\226-MUD No 67 GRADING.dwg

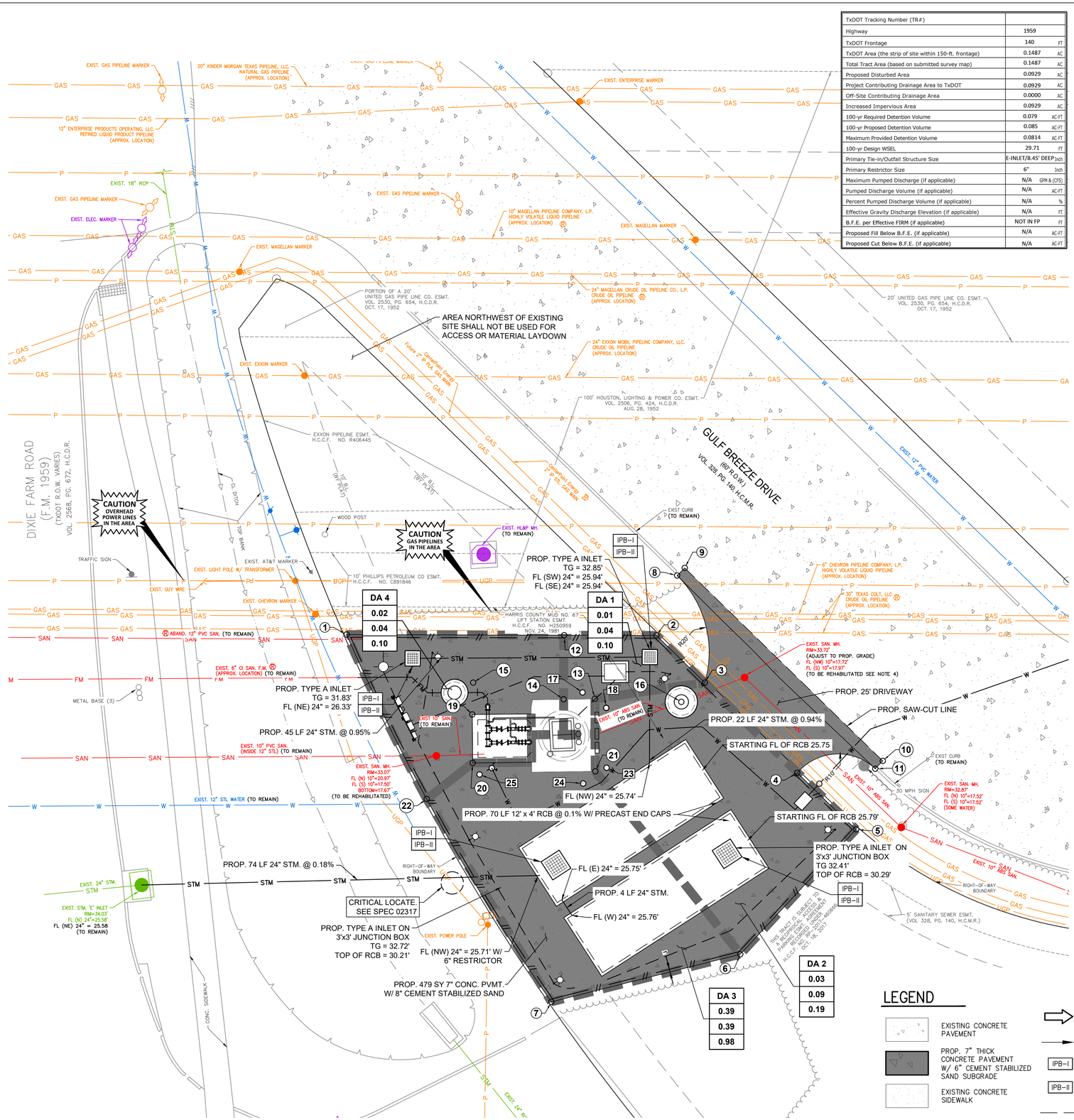

TxDOT Tracking Number (TR#)		
Highway	1959	
TxDOT Frontage	140	FT
TxDOT Area (the strip of site within 150-ft. frontage)	0.1487	AC
Total Tract Area (based on submitted survey map)	0.1487	AC
Proposed Disturbed Area	0.0929	AC
Project Contributing Drainage Area to TxDOT	0.0929	AC
Off-Site Contributing Drainage Area	0.0000	AC
Increased Impervious Area	0.0929	AC
100-yr Required Detention Volume	0.079	AC-FT
100-yr Proposed Detention Volume	0.085	AC-FT
Maximum Provided Detention Volume	0.0814	AC-FT
100-yr Design WSEL	29.71	FT
Primary Tie-in/Outfall Structure Size	E-INLET/8.45' DEEP	Inch
Primary Restrictor Size	6"	Inch
Maximum Pumped Discharge (if applicable)	N/A	GPM & (CFS)
Pumped Discharge Volume (if applicable)	N/A	AC-FT
Percent Pumped Discharge Volume (if applicable)	N/A	%
Effective Gravity Discharge Elevation (if applicable)	N/A	FT
B.F.E. per Effective FIRM (if applicable)	NOT IN FP	FT
Proposed Fill Below B.F.E. (if applicable)	N/A	AC-FT
Proposed Cut Below B.F.E. (if applicable)	N/A	AC-FT

STORMWATER DETENTION CALCULATIONS

• GROSS AREA	0.1487 AC
• PROP. IMPERVIOUS AREA	0.0929 AC
• STORAGE RATE	0.8500 AC-FT/AC
• STORAGE REQUIRED	0.0790 AC-FT

TOTAL DETENTION
- REQUIRED = 0.0790 AC-FT
- PROVIDED = 0.0814 AC-FT

10' 0' 10'
SCALE
1" = 10'

N E W S

NO.	DATE	REVISION	APP.

BENCHMARK:

CITY OF HOUSTON MONUMENT 5850–7913 IS AN ALUMINUM DISC SET IN CONCRETE APPROXIMATELY 1920' NORTHWEST FROM THE INTERSECTION OF GULF FREEWAY AND DIXIE FARM ROAD.

ELEV. 29.92 FEET NAVD 1988, 2001 ADJUSTMENT (PROJECT DATUM)
ELEV. 28.13 FEET NAVD 1988, (GEOID 18')

FLOODPLAIN NOTE:

AS PER FIRM PANEL 48201C1060M DATED JANUARY 6, 2017. THIS TRACT LIES WITHIN THE UNSHADED ZONE X.
100–YR FLOODPLAIN ELEV. 30.40'
500–YR FLOODPLAIN ELEV. 31.50'
FIRM PANEL: 48201C1060M

EXISTING UTILITY NOTE:

EXISTING UNDERGROUND UTILITY INFORMATION (TYPE, SIZE & OWNERSHIP) ARE SHOWN APPROXIMATELY BASED ON THE AVAILABLE RECORD DRAWINGS AND FIELD VERIFICATION (WHERE FEASIBLE) WITHOUT PROBING AND EXCAVATION. NO WARRANTY IS MADE AS TO THE ACCURACY OR COMPLETENESS OF UTILITY LOCATION SHOWN ON THE DRAWING. CAUTION SHOULD BE EXERCISED WHEN EXCAVATING OR BORE AND JACKING IN THE VICINITY OF UNDERGROUND UTILITIES. OWNERS OF THE UTILITIES SHOULD BE NOTIFIED PRIOR TO SUCH ACTIVITIES. CALL UTILITY COORDINATING COMMITTEE AT 713–223–4567, AT LEAST 48 HOURS PRIOR TO EXCAVATING IN THE STREET RIGHT–OF–WAY.

NOTES:

1. CONTRACTOR SHALL SUBMIT EXPANSION AND CONTROL JOINT PLAN FOR APPROVAL
2. EXPANSION JOINTS SHALL BE INSTALLED AT ALL CURB RETURNS AND AT A MAXIMUM SPACING OF 60–FT INTERVALS. PLACE 3/4 INCH PREFORMED EXPANSION JOINTS THROUGH CURB AND GUTTERS AT LOCATIONS OF JOINTS IN PAVEMENT, AT END OF RADIUS RETURNS, AT STREET INTERSECTIONS AND DRIVEWAYS, AND AT CURB INLETS.
3. LONGITUDINAL CONSTRUCTION JOINTS HALL BE SPACED AT A MAXIMUM OF 15 FEET. DEFORMED METAL STRIP TO BE INSTALLED MAXIMUM 1/4 INCH BELOW FINISHED TIP OF PAVEMENTS.
4. RESPONSIBILITY FOR MAINTENANCE OF THE DETENTION FACILITY WILL BE BY THE PROPERTY OWNER.
5. SUBSURFACE DRAINAGE SYSTEMS ARE REQUIRED TO BE DRAINED IN 48 HOURS.
6. OFFSITE FLOW IS UNAFFECTED BY THE PROPOSED LIFT STATION STRUCTURE AND CONCRETE PAVING.
7. DRAINAGE AREA EXTENDS BEYOND THE LIMITS OF THIS SHEET.

PROPOSED POINT TABLE

POINT	NORTHING	EASTING	DESCRIPTION	ELEVATION
1	13782981.63	3182034.47	PROP. TOP OF PAVEMENT/MEG	± 31.92'
2	13782939.32	3182073.49	PROP. TOP OF PAVEMENT/MEG	± 32.88'
3	13782926.77	3182073.18	PROP. TOP OF PAVEMENT	33.00'
4	13782902.78	3182072.58	PROP. TOP OF PAVEMENT	32.60'
5	13782887.61	3182072.32	PROP. TOP OF PAVEMENT/MEG	± 32.71'
6	13782887.61	3182040.67	PROP. TOP OF PAVEMENT/MEG	M.E.G.
7	13782907.33	3182010.31	PROP. TOP OF PAVEMENT/MEG	± 33.63'
8	13782944.07	3182084.28	PROP. TOP OF PAVEMENT	33.06'
9	13782943.99	3182086.28	PROP. TOP OF PAVEMENT/MEG	M.E.G.
10	13782892.63	3182085.51	PROP. TOP OF PAVEMENT/MEG	M.E.G.
11	13782892.67	3182082.99	PROP. TOP OF PAVEMENT/MEG	+/- 32.53'
12	13782974.60	3182030.93	PROP. TOP OF PAVEMENT/MEG	33.35'
13	13782973.95	3182040.24	PROP. TOP OF PAVEMENT	33.20'
14	13782969.10	3182044.79	PROP. TOP OF PAVEMENT	33.45'
15	13782958.32	3182043.92	PROP. FM BYPASS MANHOLE	M.P.G.
16	13782927.53	3182067.60	PROP. SANITARY SEWER MANHOLE	M.P.G.
19	13782954.43	3182039.46	PROP. TOP OF PAVEMENT	32.50'
20	13782948.24	3182032.92	PROP. TOP OF PAVEMENT	32.86'
21	13782930.47	3182047.26	PROP. TOP OF PAVEMENT	33.00'
22	13782949.95	3182022.19	PROP. TOP OF PAVEMENT/MEG	31.86'

PROPOSED POINT TABLE

POINT	NORTHING	EASTING	DESCRIPTION
17	13782942.18	3182056.40	PROP. BOLLARD
18	13782937.01	3182057.29	PROP. BOLLARD
23	13782929.39	3182049.18	PROP. BOLLARD
24	13782930.60	3182044.07	PROP. BOLLARD
25	13782945.84	3182032.20	PROP. BOLLARD

LEGEND

- EXISTING CONCRETE PAVEMENT
- PROP. 7" THICK CONCRETE PAVEMENT W/ 6" CEMENT STABILIZED SAND SUBGRADE
- EXISTING CONCRETE SIDEWALK
- ON–SITE SHEET FLOW DIRECTION
- OFFSITE SHEET FLOW DIRECTION (SEE NOTE 6)
- IPB–I — INLET PROTECTION BARRIER–STAGE I
- IPB–II — INLET PROTECTION BARRIER–STAGE II
- SAW–CUT CONCRETE
- DRAINAGE AREA BOUNDARY
- DRAINAGE AREA NO.
- ACRES
- 2–YR FLOW (CFS)
- 100–YR FLOW (CFS)
- DETAIL NO. / DRAWING NO.

NOTICE:
FOR YOUR SAFETY, YOU ARE REQUIRED BY TEXAS LAW TO CALL 811 AT LEAST 48 HOURS BEFORE YOU DIG SO THAT UNDERGROUND LINES CAN BE MARKED. THIS SIGNATURE DOES NOT FULFILL YOUR OBLIGATION TO CALL 811

VERIFICATION OF PRIVATE UTILITY LINES

Date

CenterPoint Energy natural gas utilities shown. (Gas service lines are not shown). This signature not be used for conflict verification.

Signature valid for six months.

Date

CenterPoint Energy/UNDERGROUND Electrical Facilities Verification ONLY. (This signature verifies existing underground facilities – not to be used for conflict verification)

Signature valid for six months.

Date

Approved for AT&T underground conduit facilities only.
Signature valid for one year.

IDS Engineering Group
13430 NW. Freeway, Suite 700
Houston, Tx. 77040
713.462.3178
TxEng Firm 2726 | TxSurv Firm 10110700

SURVEYED BY: KUO & ASSOCIATES, INC.
TBPE FIRM #F–4578; TBPLS FIRM #1007560

THIS DOCUMENT IS RELEASED FOR THE PURPOSE OF REVIEW UNDER THE AUTHORITY OF MARCEL KHOUW, P.E. 101807 ON 05/27/2026. IT IS NOT TO BE USED FOR CONSTRUCTION PURPOSES.

CITY OF HOUSTON
HOUSTON PUBLIC WORKS

LIFT STATION RENEWAL AND REPLACEMENT FY 2023

MUD NO. 67 LIFT STATION GRADING PLAN AND DRAINAGE PLAN

WBS NUMBER	FOR CITY OF HOUSTON USE ONLY
R–000267–0179–4	
DRAWING SCALE	
HORIZ: 1" = 10' VERT: N/A	
CITY OF HOUSTON PM	
NAWARAJ PANTA, P.E.	
DWG. NO. MUD–C–05	SHEET NO. 226 OF 361

PLOTTED: 5/13/2026 6:41 PM

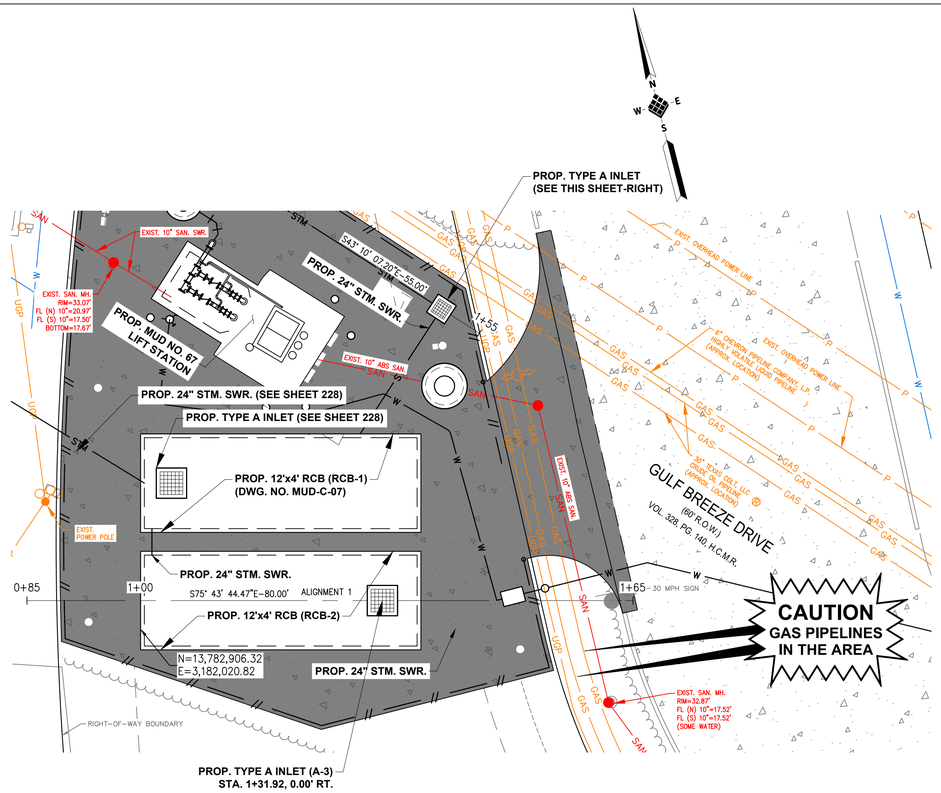

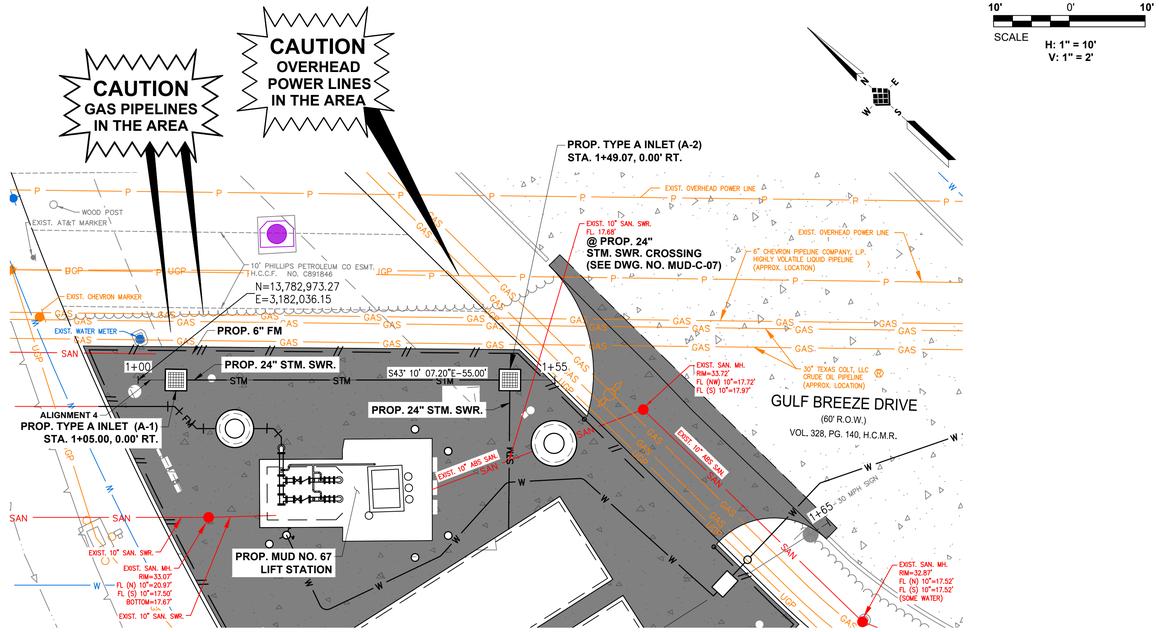

10' 0' 10'

SCALE

H: 1" = 10'
V: 1" = 2'

NO.	DATE	REVISION	APP.

RCB-2 DETENTION TO STM. SWR. INLET A-3

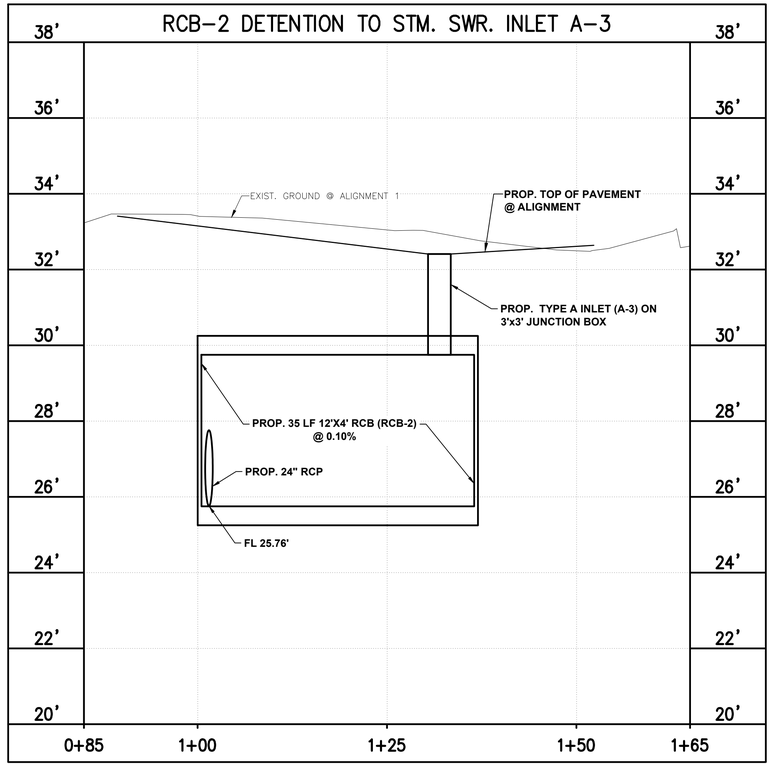

STM. SWR. INLET A-1 TO STM. SWR. INLET A-2

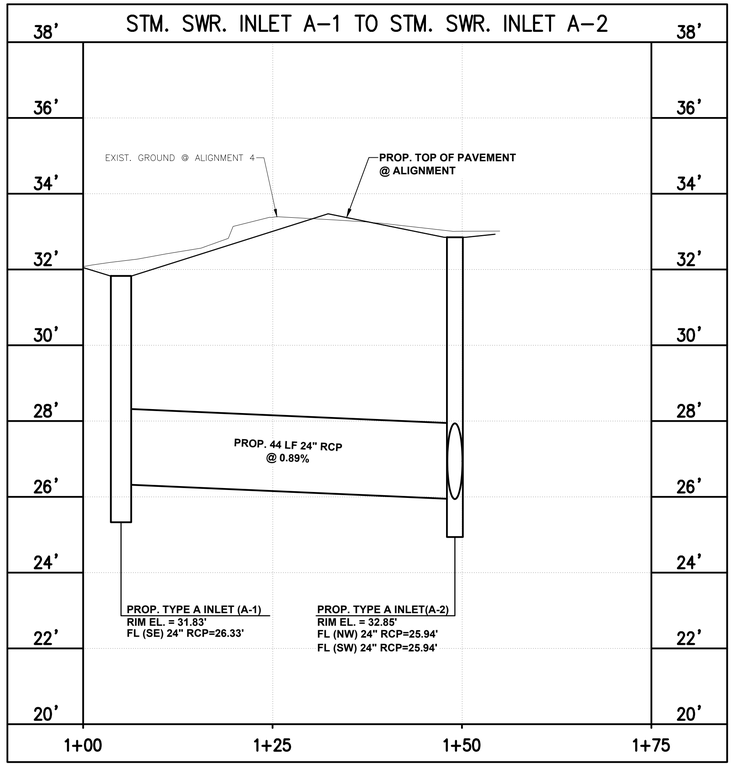

IDS Engineering Group
13430 NW. Freeway, Suite 700
Houston, Tx. 77040
713.462.3178
TxEng Firm 2726 | TxSurv Firm 10110700

SURVEYED BY: KUO & ASSOCIATES, INC.
TBPE FIRM #F-4578; TBPLS FIRM #1007560

THIS DOCUMENT IS RELEASED FOR THE PURPOSE OF REVIEW UNDER THE AUTHORITY OF MARCEL KHOUW, P.E. 101807 ON 05/27/2026. IT IS NOT TO BE USED FOR CONSTRUCTION PURPOSES.

CITY OF HOUSTON
HOUSTON PUBLIC WORKS

LIFT STATION RENEWAL AND REPLACEMENT FY 2023

MUD NO. 67 LIFT STATION PLAN AND PROFILE (SHEET 1 OF 2)

WBS NUMBER	FOR CITY OF HOUSTON USE ONLY
R-000267-0179-4	
DRAWING SCALE	
HORIZ: 1" = 10' VERT: 1" = 2'	
CITY OF HOUSTON PM	
NAWARAJ PANTA, P.E.	
SHEET NO. 227 OF 361	

DWG. NO. MUD-C-06

FILE PATH: \\idseg.com\FS\Projects\0000\005708500 CoH Lift Stations - FY 2023\CAD\DWG\PRODUCTION\227-MUD No 67 PLAN AND PROFILE.dwg

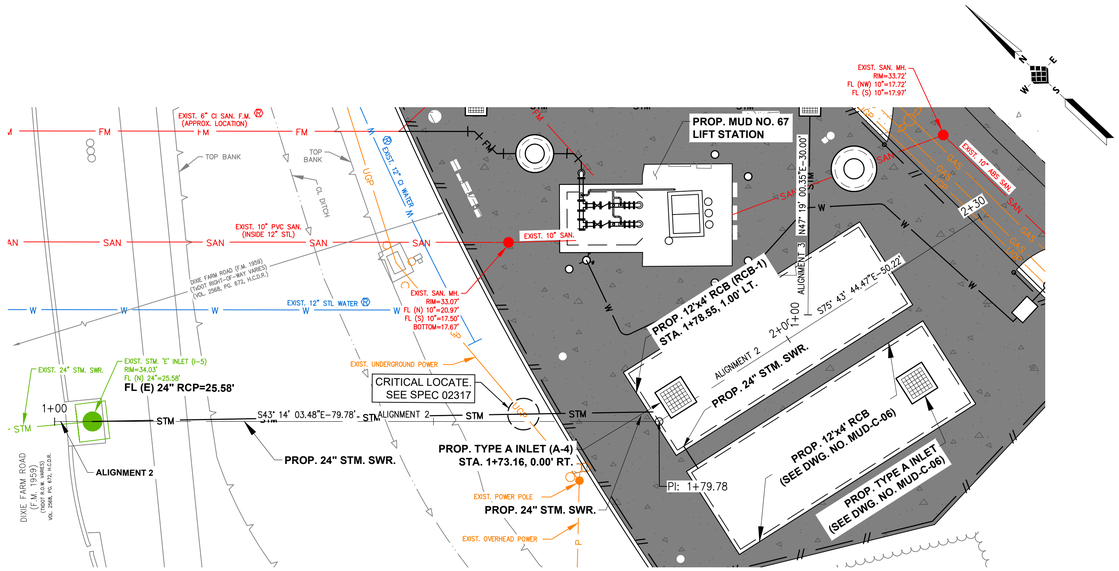

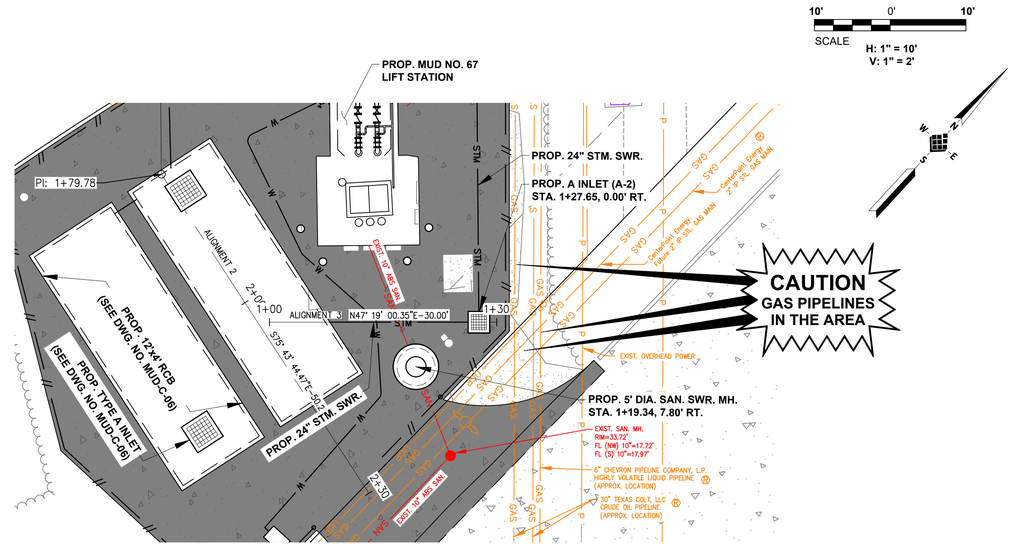

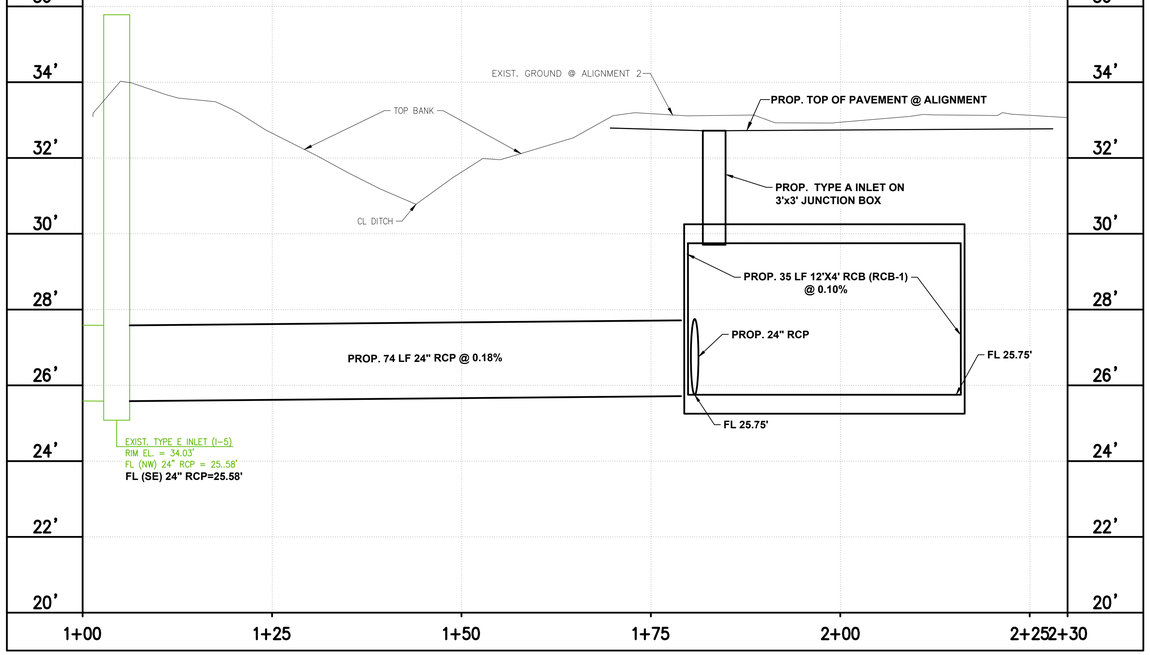

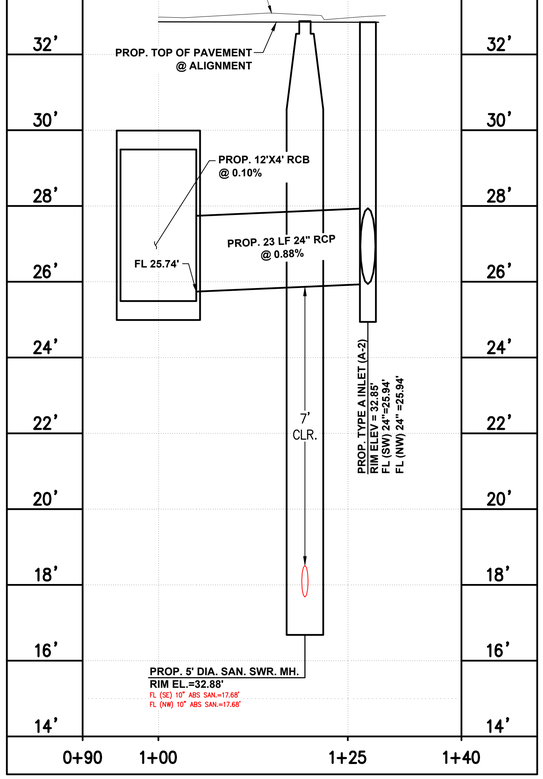

NO.	DATE	REVISION	APP.

IDS Engineering Group
13430 NW. Freeway, Suite 700
Houston, Tx. 77040
713.462.3178
TxEng Firm 2726 | TxSurv Firm 10110700

SURVEYED BY: KUO & ASSOCIATES, INC.
TBPE FIRM #F-4578; TBPLS FIRM #1007560

THIS DOCUMENT IS RELEASED FOR THE PURPOSE OF REVIEW UNDER THE AUTHORITY OF MARCEL KHOUW, P.E. 101807 ON 05/27/2026. IT IS NOT TO BE USED FOR CONSTRUCTION PURPOSES.

CITY OF HOUSTON
HOUSTON PUBLIC WORKS

LIFT STATION RENEWAL AND REPLACEMENT FY 2023

MUD NO. 67 LIFT STATION PLAN AND PROFILE

WBS NUMBER	FOR CITY OF HOUSTON USE ONLY
R-000267-0179-4	
DRAWING SCALE	
HORIZ: 1" = 10' VERT: 1" = 2'	
CITY OF HOUSTON PM	
NAWARAJ PANTA, P.E.	

DWG. NO.	SHEET NO. 228 OF 361
MUD-C-07	

PLOTTED: 5/13/2026 6:41 PM
FILE PATH: \\dseg.com\FS\Projects\0000\0005708500 CoH Lift Stations - FY 2023\CAD\DWG\PRODUCTION\228-MUD No 67 PLAN AND PROFILE.dwg

PLOTTED: 5/13/2026 6:41 PM

STORM SEWER CALCULATIONS
IDS ENGINEERING GROUP

CLIENT NAME: **CITY OF HOUSTON**
PROJECT NAME: **WBS NO. R-000267-0179-3 - MUD #67 LIFT STATION**
IDS JOB NO: **0057-085-00**
DATE PRINTED: May 12, 2026
DATE REVISED: May 12, 2026 BY: CM

SELECT STORM EVENT FREQUENCY: 2 year
SELECT APPROPRIATE LAND USE: Light Industrial
ENTER DESIGN CURB HEIGHT (inches): 0

Re-Generate Formulas

Line	Manhole or Inlet Number U / S	D / S	Reach Length (feet)	Diameter or Rise (inches)	Span (inches)	No. of Barrels	Pipe Material	Pipe Grade Minimum (%)	Pipe Grade Actual (%)	Area (acres)	Sum of Area (acres)	Runoff Coeff.	Sum of C x Area (acres)	Travel Time (minutes)	Time of Concentration (minutes)	Intensity (in./hr.)	Sum of Flows (cfs)	Design Flow (cfs)	Design Velocity (fps)	Actual Velocity (fps)	Hydraulic Gradient (%)	Change in Head (feet)	Upstream Top of Grate (feet)	Hydraulic Grade Upstream (feet)	Hydraulic Grade Downstream (feet)	Manhole Drop (D/S) (feet)	Pipe Flowline Upstream (feet)	Pipe Flowline Downstream (feet)	Depth from Gutter to HGL (feet)	Depth of Cover (feet)	Upstream NG Elev. (feet)	Depth from NG to HGL (feet)
1	A-1	A-2	41.26	24		1	RCP	0.180%	0.945%	0.02	0.02	0.65	0.01	49.43	19.8	4.23	0.04	21.99	7.00	0.01	0.000%	0.00	31.83	27.94	27.94	0.00	***26.33***	25.94	3.89	3.50	31.83	3.89
2	A-2	***RCB-1***	21.23	24		1	RCP	0.180%	0.942%	0.01	0.02	0.65	0.01	25.44	69.3	2.05	0.04	21.96	6.99	0.01	0.000%	0.00	32.85	27.74	27.74	0.00	***25.94***	***25.74***	5.11	4.91	32.85	5.11
3	***RCB-2***	***RCB-1***	4.00	24		1	RCP	0.180%	0.250%	0.03	0.03	0.65	0.02	2.43	20.4	4.16	0.09	11.31	3.60	0.03	0.000%	0.00	32.41	27.75	27.75	0.00	***25.76***	***25.75***	4.66	4.65	32.41	4.66
5	RCB-1	***OUT***	74.00	24		1	RCP	0.180%	0.230%	0.05	0.05	0.65	0.03	27.25	21.0	4.11	0.14	10.84	3.45	0.05	0.000%	0.00	32.72	27.58	27.58	0.00	***25.75***	***25.58***	5.14	4.97	32.72	5.14

NOTES:
1. This spreadsheet has been developed using the City of Houston criteria outlined in the November 2023 Infrastructure Design Manual. The Rational Method has been used to calculate flows, and Manning's Formula for pipes flowing full has been used to calculate velocities.
2. This spreadsheet calculates rainfall intensity using the b, d, and e constants for Harris County and the City of Houston, as outlined in Appendix H of the Harris County Infrastructure Regulations, and Chapter 9 of the November 2023 City of Houston Infrastructure Design Manual
3. Minimum storm sewer grades and maximum velocities as established in the City of Houston design criteria have been used to establish the grades used in this system.
4. Land Use "SFR" represents Single-Family Residential development. Land Use "MFR" represents Multi-Family Residential development.
5. Design flow and velocity are based entirely on pipe grade and represent the condition when pipe is flowing full with the hydraulic grade line equal to the pipe grade, and are used to demonstrate that the pipe slopes used in the calculations conform to the City of Houston minimum and maximum standards.

Runoff Coefficient Table	
Land Use	C
SFR (> ½ ac. lots)	0.35
SFR (¼ - ½ ac. lots)	0.45
SFR (< ¼ ac. lots)	0.55
MFR (< 20 d.u./ac.)	0.65
MFR (>= 20 d.u./ac.)	0.80
Business Districts	0.80
Light Industrial	0.65
Heavy Industrial	0.75
Railroad Yard Areas	0.30
Parks/Open Areas	0.18
Land Use Varies	ENTER

Pipe Material	Mannings "n" Value	Pipe Description
CLAY	0.012	Extra Strength Vitrified Clay Pipe
CMP	0.024	Corrugated Metal Pipe
CMPSI	0.013	CMP w/ Smooth Interior
HDPE	0.013	High Density Polyethylene Pipe
PVC	0.013	Polyvinyl Chloride Pipe
RCA	0.013	Reinforced Concrete Arch Pipe
RCB	0.015	Reinforced Concrete Box Culvert
RCE	0.013	Reinforced Concrete Elliptical Pipe
RCP	0.013	Reinforced Concrete Pipe

Rainfall Freq. (yrs)	b	d	e
2 year	***48.35***	***9.07***	***0.7244***
5 year	52.32	7.88	0.6900
10 year	54.68	6.96	0.6623
25 year	57.79	5.89	0.6294
50 year	61.00	5.46	0.6096
100 year	60.66	4.44	0.5797
500 year	62.17	2.95	0.5196

Master Spreadsheet - Storm Sewer Calculations Updated 02/10/2025
\\idseg.com\FS\Projects\0000\005708500 CoH Lift Stations - FY 2023\Eng\Calcs\Drainage\[5. MUD #67 Drainage Calcs.xlsx]CALCULATIONS

STORM SEWER CALCULATIONS
IDS ENGINEERING GROUP

CLIENT NAME: **CITY OF HOUSTON**
PROJECT NAME: **WBS NO. R-000267-0179-3 - MUD #67 LIFT STATION**
IDS JOB NO: **0057-085-00**
DATE PRINTED: May 12, 2026
DATE REVISED: May 12, 2026 BY: CM

SELECT STORM EVENT FREQUENCY: 100 year
SELECT APPROPRIATE LAND USE: Light Industrial
ENTER DESIGN CURB HEIGHT (inches): 0

Re-Generate Formulas

Line	Manhole or Inlet Number U / S	D / S	Reach Length (feet)	Diameter or Rise (inches)	Span (inches)	No. of Barrels	Pipe Material	Pipe Grade Minimum (%)	Pipe Grade Actual (%)	Area (acres)	Sum of Area (acres)	Runoff Coeff.	Sum of C x Area (acres)	Travel Time (minutes)	Time of Concentration (minutes)	Intensity (in./hr.)	Sum of Flows (cfs)	Design Flow (cfs)	Design Velocity (fps)	Actual Velocity (fps)	Hydraulic Gradient (%)	Change in Head (feet)	Upstream Top of Grate (feet)	Hydraulic Grade Upstream (feet)	Hydraulic Grade Downstream (feet)	Manhole Drop (D/S) (feet)	Pipe Flowline Upstream (feet)	Pipe Flowline Downstream (feet)	Depth from Gutter to HGL (feet)	Depth of Cover (feet)	Upstream NG Elev. (feet)	Depth from NG to HGL (feet)
1	A-1	A-2	41.26	24		1	RCP	0.180%	0.945%	0.02	0.02	0.65	0.01	21.89	19.8	9.55	0.10	21.99	7.00	0.03	0.000%	0.00	31.83	27.94	27.94	0.00	***26.33***	25.94	3.89	3.50	31.83	3.89
2	A-2	***RCB-1***	21.23	24		1	RCP	0.180%	0.942%	0.01	0.02	0.65	0.01	11.26	41.7	6.58	0.10	21.96	6.99	0.03	0.000%	0.00	32.85	27.74	27.74	0.00	***25.94***	***25.74***	5.11	4.91	32.85	5.11
3	***RCB-2***	***RCB-1***	4.00	24		1	RCP	0.180%	0.250%	0.03	0.03	0.65	0.02	1.08	20.4	9.41	0.19	11.31	3.60	0.06	0.000%	0.00	32.41	27.75	27.75	0.00	***25.76***	***25.75***	4.66	4.65	32.41	4.66
5	RCB-1	***OUT***	74.00	24		1	RCP	0.180%	0.230%	0.05	0.05	0.65	0.03	12.05	21.0	9.30	0.32	10.84	3.45	0.10	0.000%	0.00	32.72	27.58	27.58	0.00	***25.75***	***25.58***	5.14	4.97	32.72	5.14

NOTES:
1. This spreadsheet has been developed using the City of Houston criteria outlined in the November 2023 Infrastructure Design Manual. The Rational Method has been used to calculate flows, and Manning's Formula for pipes flowing full has been used to calculate velocities.
2. This spreadsheet calculates rainfall intensity using the b, d, and e constants for Harris County and the City of Houston, as outlined in Appendix H of the Harris County Infrastructure Regulations, and Chapter 9 of the November 2023 City of Houston Infrastructure Design Manual
3. Minimum storm sewer grades and maximum velocities as established in the City of Houston design criteria have been used to establish the grades used in this system.
4. Land Use "SFR" represents Single-Family Residential development. Land Use "MFR" represents Multi-Family Residential development.
5. Design flow and velocity are based entirely on pipe grade and represent the condition when pipe is flowing full with the hydraulic grade line equal to the pipe grade, and are used to demonstrate that the pipe slopes used in the calculations conform to the City of Houston minimum and maximum standards.

Runoff Coefficient Table	
Land Use	C
SFR (> ½ ac. lots)	0.35
SFR (¼ - ½ ac. lots)	0.45
SFR (< ¼ ac. lots)	0.55
MFR (< 20 d.u./ac.)	0.65
MFR (>= 20 d.u./ac.)	0.80
Business Districts	0.80
Light Industrial	0.65
Heavy Industrial	0.75
Railroad Yard Areas	0.30
Parks/Open Areas	0.18
Land Use Varies	ENTER

Pipe Material	Mannings "n" Value	Pipe Description
CLAY	0.012	Extra Strength Vitrified Clay Pipe
CMP	0.024	Corrugated Metal Pipe
CMPSI	0.013	CMP w/ Smooth Interior
HDPE	0.013	High Density Polyethylene Pipe
PVC	0.013	Polyvinyl Chloride Pipe
RCA	0.013	Reinforced Concrete Arch Pipe
RCB	0.015	Reinforced Concrete Box Culvert
RCE	0.013	Reinforced Concrete Elliptical Pipe
RCP	0.013	Reinforced Concrete Pipe

Rainfall Freq. (yrs)	b	d	e
2 year	48.35	9.07	0.7244
5 year	52.32	7.88	0.6900
10 year	54.68	6.96	0.6623
25 year	57.79	5.89	0.6294
50 year	61.00	5.46	0.6096
100 year	***60.66***	***4.44***	***0.5797***
500 year	62.17	2.95	0.5196

Master Spreadsheet - Storm Sewer Calculations Updated 02/10/2025
\\idseg.com\FS\Projects\0000\005708500 CoH Lift Stations - FY 2023\Eng\Calcs\Drainage\[5. MUD #67 Drainage Calcs.xlsx]CALCULATIONS

NO.	DATE	REVISION	APP.

IDS Engineering Group
13430 NW. Freeway, Suite 700
Houston, Tx. 77040
713.462.3178
TxEng Firm 2726 | TxSurv Firm 10110700

SURVEYED BY: KUO & ASSOCIATES, INC.
TBPE FIRM #F-4578; TBPLS FIRM #1007560

THIS DOCUMENT IS RELEASED FOR THE PURPOSE OF REVIEW UNDER THE AUTHORITY OF MARCEL KHOUW, P.E. 101807 ON 05/27/2026. IT IS NOT TO BE USED FOR CONSTRUCTION PURPOSES.

CITY OF HOUSTON
HOUSTON PUBLIC WORKS

LIFT STATION RENEWAL AND REPLACEMENT FY 2023

MUD NO. 67 LIFT STATION DRAINAGE CALCULATIONS

WBS NUMBER	FOR CITY OF HOUSTON USE ONLY
R-000267-0179-4	
DRAWING SCALE	
HORIZ: N/A VERT: N/A	
CITY OF HOUSTON PM	
NAWARAJ PANTA, P.E.	
SHEET NO. 229 OF 361	

DWG. NO. MUD-C-08

FILE PATH: \\idseg.com\FS\Projects\0000\005708500 CoH Lift Stations - FY 2023\CAD\DWG\PRODUCTION\229-MUD No 67 CALCULATIONS.dwg

PLOTTED: 5/13/2026 6:42 PM

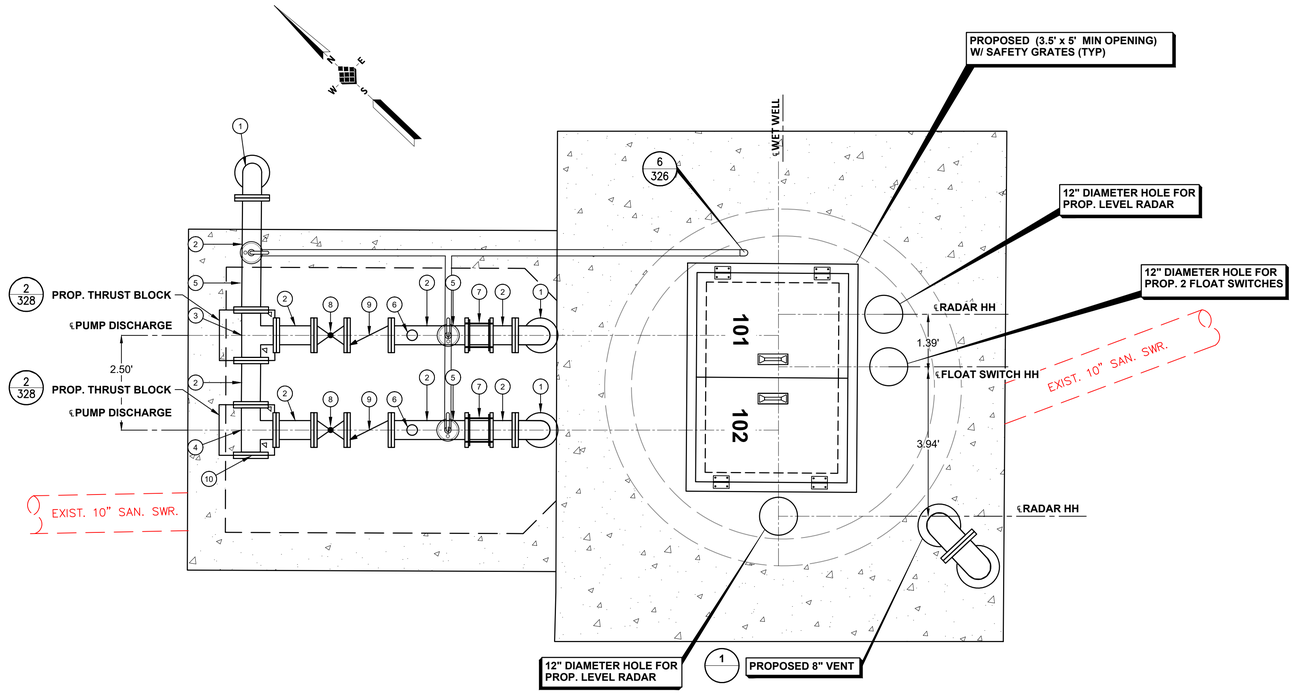

PLAN VIEW AT GRADE

SCALE: 1" = 2'

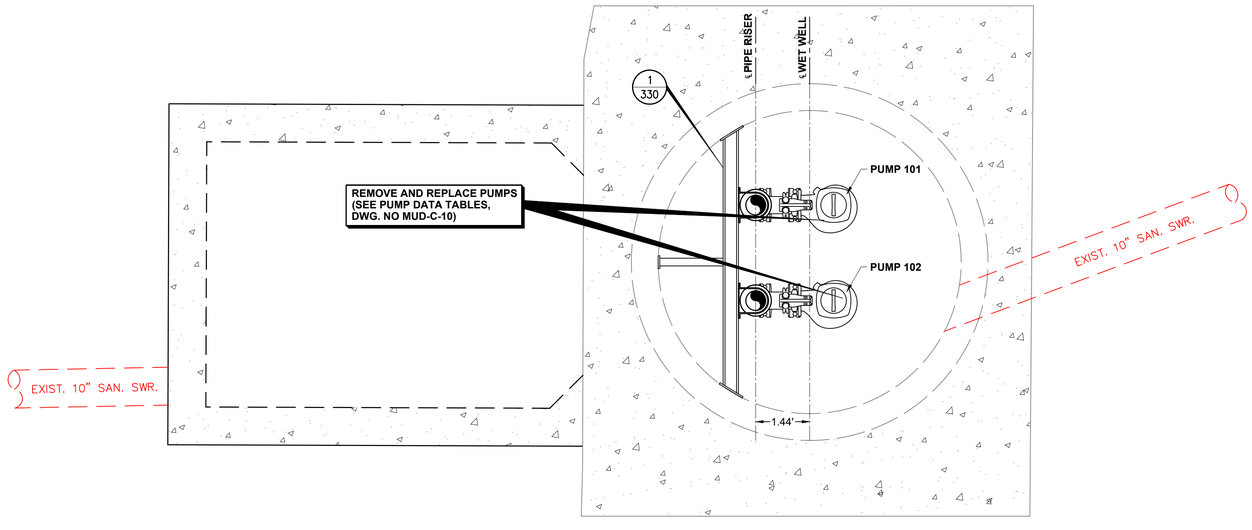

SECTION A-A VIEW (A)

SCALE: 1" = 2'

ITEMS TO BE REMOVED & REPLACED		
KEYED NOTES	ITEM	QTY
1	90° BEND (6")	3
2	SPOOL PIECE (6")	8
3	TEE (6" x 6")	1
4	TEE (6" x 6") W/ BLIND FLANGE (6")	1
5	2" AIR RELEASE & VACUUM VALVE ASSEMBLY	3
6	PRESSURE GAUGE ASSEMBLY	2
7	FLEXIBLE COUPLING (6")	2
8	PLUG VALVE (6")	2
9	CHECK VALVE (6")	2
10	BLIND FLANGE (6")	1

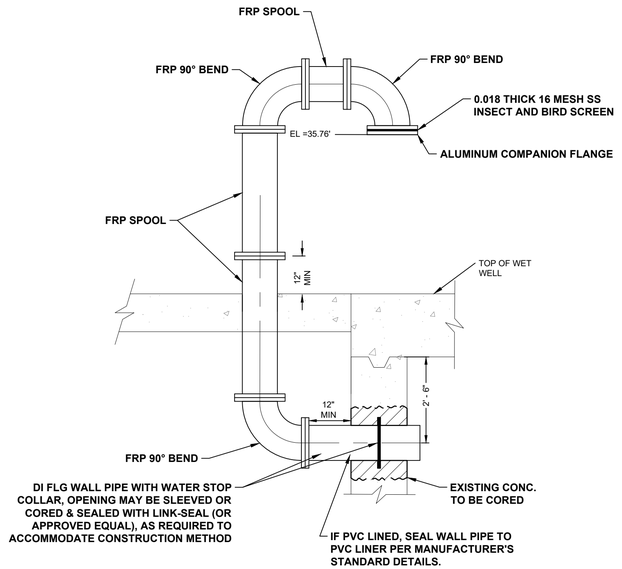

PROPOSED STRUCTURE PENETRATION (1)

SCALE: N.T.S.

NOTES:

1. ABRASIVE BLAST AND COAT ALL PIPING AND FITTINGS NOT BEING REPLACED IN WET WELL.
2. CONTRACTOR TO VERIFY DIMENSIONS REQUIRED TO INSTALL AND OPERATE VALVES.
3. EXISTING LIFT STATION WET WELL STRUCTURE TO REMAIN.
4. UV PROTECTIVE COATINGS ARE REQUIRED BY THE CITY OF HOUSTON ON ALL VENT PIPES.
5. LABEL HATCHES WITH THE CORRESPONDING PUMP NUMBER USING A 12–INCH BY 6–INCH ALUMINUM PLATE ENGRAVED WITH 1.5–INCH LETTERING WELDED TO THE HATCH.
6. CONTRACTOR TO CONFIRM SIZE AND LOCATION OF THE WET WELL HATCHES PER HATCH AND PUMP MANUFACTURER REQUIREMENTS.
7. PUMP AND ANCHOR BOLTS ARE TO BE ADHESIVE TYPE, AND EMBEDDED IN THE CONCRETE SLAB. CONTRACTOR TO SUBMIT DESIGN OF PUMP ANCHOR BOLTS AND PATTERNS, INCLUDING CALCULATIONS, DURING SHOP DRAWING SUBMISSION.
8. ACCESS HATCHES SHALL BE ALUMINUM AND FOREST GREEN. SAFETY GRATING SHALL BE FURNISHED WITH SAFETY ORANGE POWDER COAT FINISH.
9. WET WELL TO BE COATED WITH PROTECTIVE COATING PER PROJECT MANAGER FOR SPECIFICATIONS, CONSULT WITH THE CITY OF HOUSTON PROJECT MANAGER FOR APPROVED PRODUCTS. COATING SHALL COVER ALL CONCRETE SURFACES, AND SHALL EXTEND TO A MINIMUM OF 12" BELOW THE LOW WATER ELEVATION.

LEGEND

- (#/#) DETAIL NO. / SHEET NO.
- EXIST. CONCRETE
- PROP. CONCRETE

NO.	DATE	REVISION	APP.

IDS Engineering Group
13430 NW. Freeway, Suite 700
Houston, Tx. 77040
713.462.3178
TxEng Firm 2726 | TxSurv Firm 10110700

SURVEYED BY: KUO & ASSOCIATES, INC.
TBPE FIRM #F-4578; TBPLS FIRM #1007560

THIS DOCUMENT IS RELEASED FOR THE PURPOSE OF REVIEW UNDER THE AUTHORITY OF MARCEL KHOUW, P.E. 101807 ON 05/27/2026. IT IS NOT TO BE USED FOR CONSTRUCTION PURPOSES.

CITY OF HOUSTON
HOUSTON PUBLIC WORKS

LIFT STATION RENEWAL AND REPLACEMENT FY 2023

MUD NO. 67 LIFT STATION PLAN AT GRADE AND BASE

WBS NUMBER	FOR CITY OF HOUSTON USE ONLY
R–000267–0179–4	
DRAWING SCALE	
HORIZ: AS NOTED VERT: N.A	
CITY OF HOUSTON PM	
NAWARAJ PANTA, P.E.	

DWG. NO. MUD–C–09

SHEET NO. 230 OF 361

FILE PATH: \\idseg.com\FS\Projects\0000\005708500 CoH Lift Stations – FY 2023\CAD\DWG\PRODUCTION\230–MUD No 67 PLAN AT GRADE.dwg

PLOTTED: 5/13/2026 6:42 PM

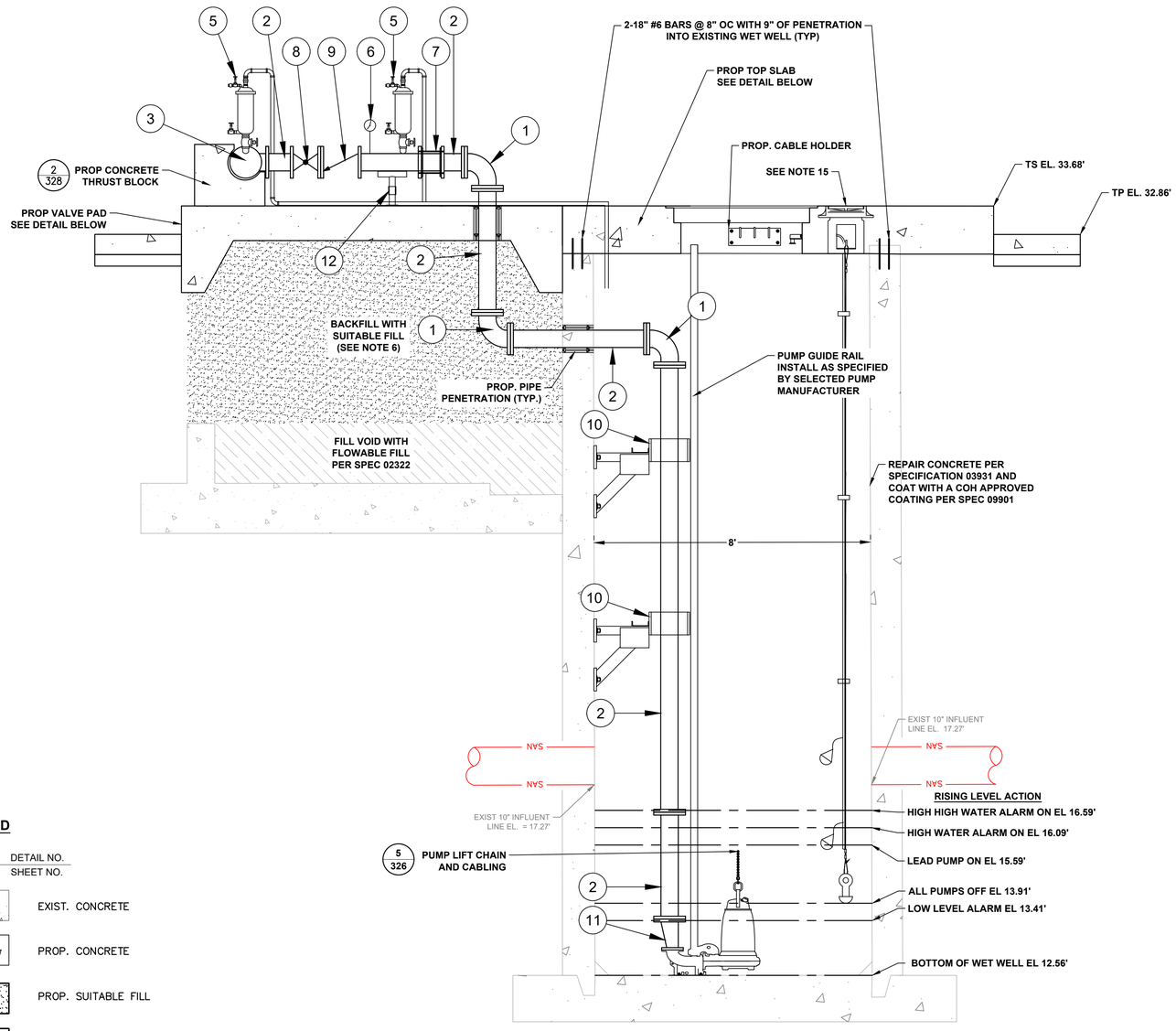

SECTIONAL ELEVATION A

SCALE: 1" = 2'

LEGEND

- # / # — DETAIL NO. / SHEET NO.
- EXIST. CONCRETE
- PROP. CONCRETE
- PROP. SUITABLE FILL
- PROP. FLOWABLE FILL

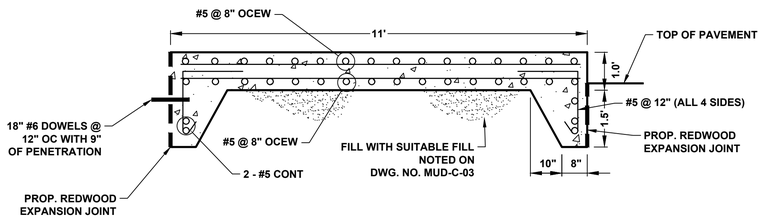

DISCHARGE PIPING CONCRETE SLAB DETAIL

SCALE: 1" = 2'

ITEMS TO BE REMOVED & REPLACED		
KEYED NOTES	ITEM	QTY
1	90° BEND (6")	2
2	SPOOL PIECE (6")	7
3	TEE (6" x 6")	1
4	TEE (6" x 6") W/ BLIND FLANGE (6")	0
5	2" AIR RELEASE & VACUUM VALVE ASSEMBLY	2
6	PRESSURE GAUGE ASSEMBLY	1
7	FLEXIBLE COUPLING (6")	1
8	PLUG VALVE	1
9	CHECK VALVE	1
10	316 STAINLESS STEEL SUPPORT	2
11	ECCENTRIC REDUCER (6" x 4")	1
12	ADJUSTABLE PIPE SUPPORT	2

PUMP DATA TABLE*

PUMP CHARACTERISTICS	PUMP NO. 1	PUMP NO. 2
MOTOR DATA NOMIMAL SIZE (HP)	5.5	5.5
MOTOR DATA MAX SPEED (RPM)	1800	1800
SOLIDS PASSAGE MINIMUM SPHERE (IN)	3	3
CAPACITY (GPM) DESIGN	413	413
CAPACITY (GPM) RUNOUT	761	761
DISCHARGE HEAD (FT) DESIGN	24.41	24.41
DISCHARGE HEAD (FT) RUNOUT	2	2
DISCHARGE HEAD (FT) SHUT OFF	46.1	46.1
EFFICIENCY (%) DESIGN	65.8	65.8
NPSHR (FT) DESIGN	15.8	15.8
NPSHR (FT) RUNOUT	29.4	29.4
PUMP CYCLE TIME (MIN)	6	6
CUMULATIVE CAPACITY (GPM)	413	-

*FLYGT NP 3102 MT 3 ~ Adaptive 464 used for all pump calculations.

NOTES:

1. ABRASIVE BLAST AND COAT ALL PIPING AND FITTINGS NOT BEING REPLACED IN WET WELL.
2. CONTRACTOR TO VERIFY DIMENSIONS REQUIRED TO INSTALL AND OPERATE VALVES.
3. EXISTING LIFT STATION WET WELL STRUCTURE TO REMAIN.
4. UV PROTECTIVE COATINGS ARE REQUIRED BY THE CITY OF HOUSTON ON ALL VENT PIPES.
5. LABEL HATCHES WITH THE CORRESPONDING PUMP NUMBER USING A 12–INCH BY 6–INCH ALUMINUM PLATE ENGRAVED WITH 1.5–INCH LETTERING WELDED TO THE HATCH.
6. FILL VOID LEFT BY REMOVAL OF EXISTING VALVE VAULT WITH SUITABLE FILL.
7. SEE ELECTRICAL PLANS FOR ADDITIONAL IMPROVEMENTS.
8. ABRASIVE BLAST AND COAT TO BE IN ACCORDANCE WITH SYSTEM 108 PER SPEC SECTION 09901 PART 2.03J.
9. CONTRACTOR TO CONFIRM SIZE AND LOCATION OF THE WET WELL HATCHES PER HATCH AND PUMP MANUFACTURER REQUIREMENTS
10. PUMP AND ANCHOR BOLTS ARE THE BE ADHESIVE TYPE, AND EMBEDDED IN THE CONCRETE SLAB. CONTRACTOR TO SUBMIT DESIGN OF PUMP ANCHOR BOLTS AND PATTERN, INCLUDING CALCULATIONS, DURING SHOP DRAWINGS SUBMISSION.
11. ALL PIPING IN THE WET WELL SHALL BE FLANGED. NO FLANGED COUPLING ADAPTORS, OR VICTAULIC STYLE COUPLINGS SHALL BE PERMITTED INSIDE OF THE WET WELL.
12. ACCESS HATCHES SHALL BE FOREST GREEN. SAFETY GRATING SHALL BE FURNISHED WITH SAFETY ORANGE POWDER COAT FINISH.
13. INSTALL PLUG VALVES TO OPEN UPWARD AND TO CLOSE TO A SEATING POSITION.
14. INSTALL CHECK VALVES SO THAT THE WEIGHT LEVER POSITION IS APPROXIMATELY 45 DEGREES BELOW THE VALVE HORIZONTAL CENTER LINE IN THE CLOSE POSITION AND APPROXIMATELY 45 DEGREES ABOVE THE HORIZONTAL CENTER LINE IN THE FULL OPEN POSITION.
15. PROPOSED FLOAT SWITCH AND LEVEL RADARS SHOWN FOR REFERENCE. REFER TO MUD–C–09 AND MUD–E–05 FOR LOCATION AND SIZE.
16. CONTRACTOR TO SUBMIT A WET WELL TOP SLAB STRUCTURAL PLAN SIGN AND SEALED BY A REGISTERED ENGINEER IN THE STATE OF TEXAS.
17. WET WELL TO BE COATED WITH PROTECTIVE COATING PER PROJECT SPECIFICATIONS, CONSULT WITH THE CITY OF HOUSTON PROJECT MANAGER FOR APPROVED PRODUCTS. COATING SHALL COVER ALL CONCRETE SURFACES, AND SHALL EXTEND TO A MINIMUM OF 12" BELOW THE LOW WATER ELEVATION.

NO.	DATE	REVISION	APP.

STATION OPERATING TABLES

PROPOSED CONDITION - 0.58 MGD

RISING WATER LEVEL

WATER LEVEL ELEVATION	ACTION	PUMP(S) IN OPERATION
13.91	PUMPS OFF LEVEL - NO ACTION	ALL PUMPS ARE OFF
15.59	LEAD PUMP TURNS ON	LEAD PUMP ON
16.09	HIGH WATER ALARM ON	HIGH WATER ALARM SOUND
16.59	HIGH HIGH WATER ALARM ON (FLOAT ON LEVEL)	FIRM PUMPS ON (FLOATS)

FALLING WATER LEVEL

WATER LEVEL ELEVATION	ACTION	PUMP(S) IN OPERATION
16.59	FLOAT OFF LEVEL	FIMR PUMPS OFF (FLOATS)
16.09	HIGH WATER LEVEL ALARM OFF	LEAD PUMP ON
13.91	LEAD PUMP TURNS OFF	ALL PUMPS STOPPED - STANDBY PUMP SWITCHES TO LEAD PUMP
13.41	LOW LEVEL ALARM	-

DESIGN POINT 403 GPM @ 24.41 FT

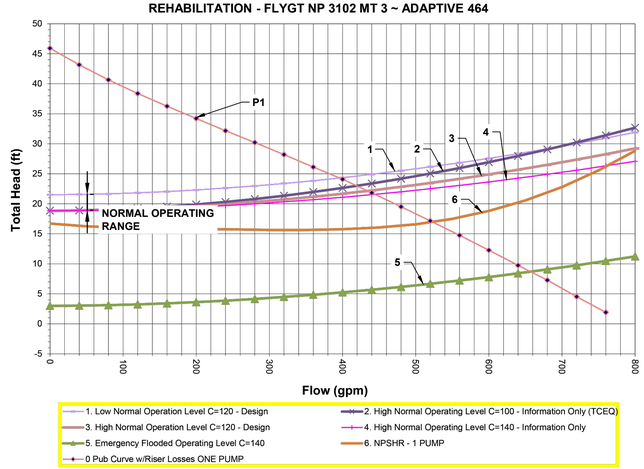

IDS Engineering Group
13430 NW. Freeway, Suite 700
Houston, Tx. 77040
713.462.3178
TxEng Firm 2726 | TxSurv Firm 10110700

SURVEYED BY: KUO & ASSOCIATES, INC.
TBPE FIRM #F–4578; TBPLS FIRM #1007560

THIS DOCUMENT IS RELEASED FOR THE PURPOSE OF REVIEW UNDER THE AUTHORITY OF MARCEL KHOUW, P.E. 101807 ON 05/27/2026. IT IS NOT TO BE USED FOR CONSTRUCTION PURPOSES.

CITY OF HOUSTON
HOUSTON PUBLIC WORKS

LIFT STATION RENEWAL AND REPLACEMENT FY 2023

MUD NO. 67 LIFT STATION ELEVATION SECTION

WBS NUMBER	FOR CITY OF HOUSTON USE ONLY
R–000267–0179–4	
DRAWING SCALE	
HORIZ: AS NOTED VERT: N/A	
CITY OF HOUSTON PM	
NAWARAJ PANTA, P.E.	
DWG. NO. MUD–C–10	SHEET NO. 231 OF 361

FILE PATH: \\idseg.com\FS\Projects\0000\005708500 CoH Lift Stations – FY 2023\CAD\DWG\PRODUCTION\231–MUD No 67 ELEV SECTION.dwg

PLOTTED: 5/13/2026 6:42 PM

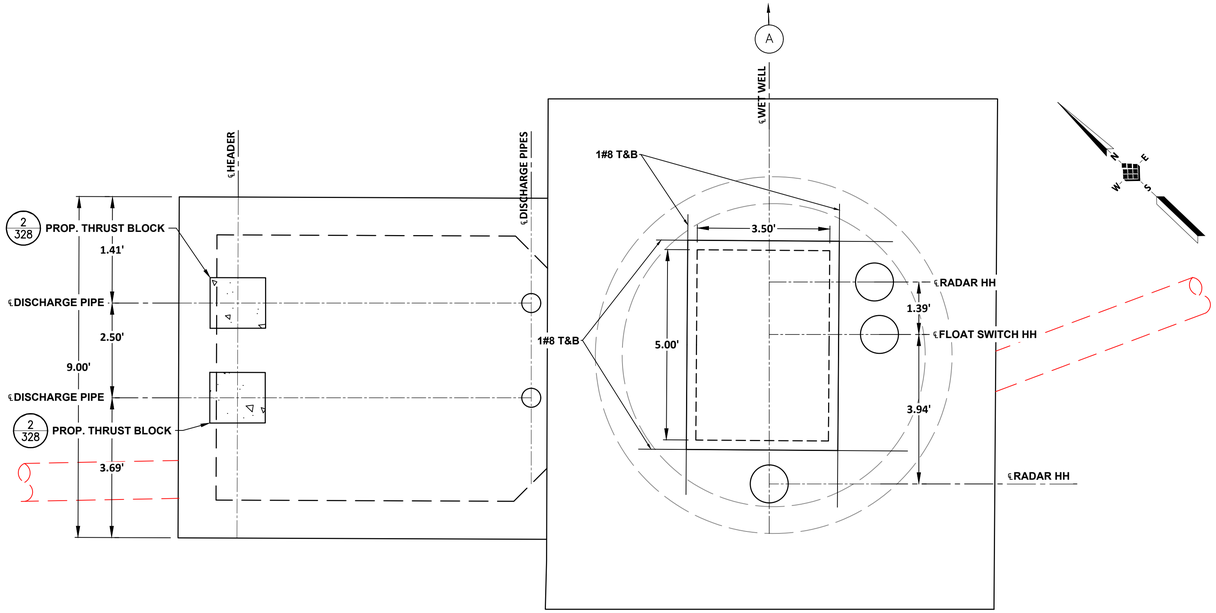

PLAN VIEW AT GRADE

SCALE: 1" = 2'

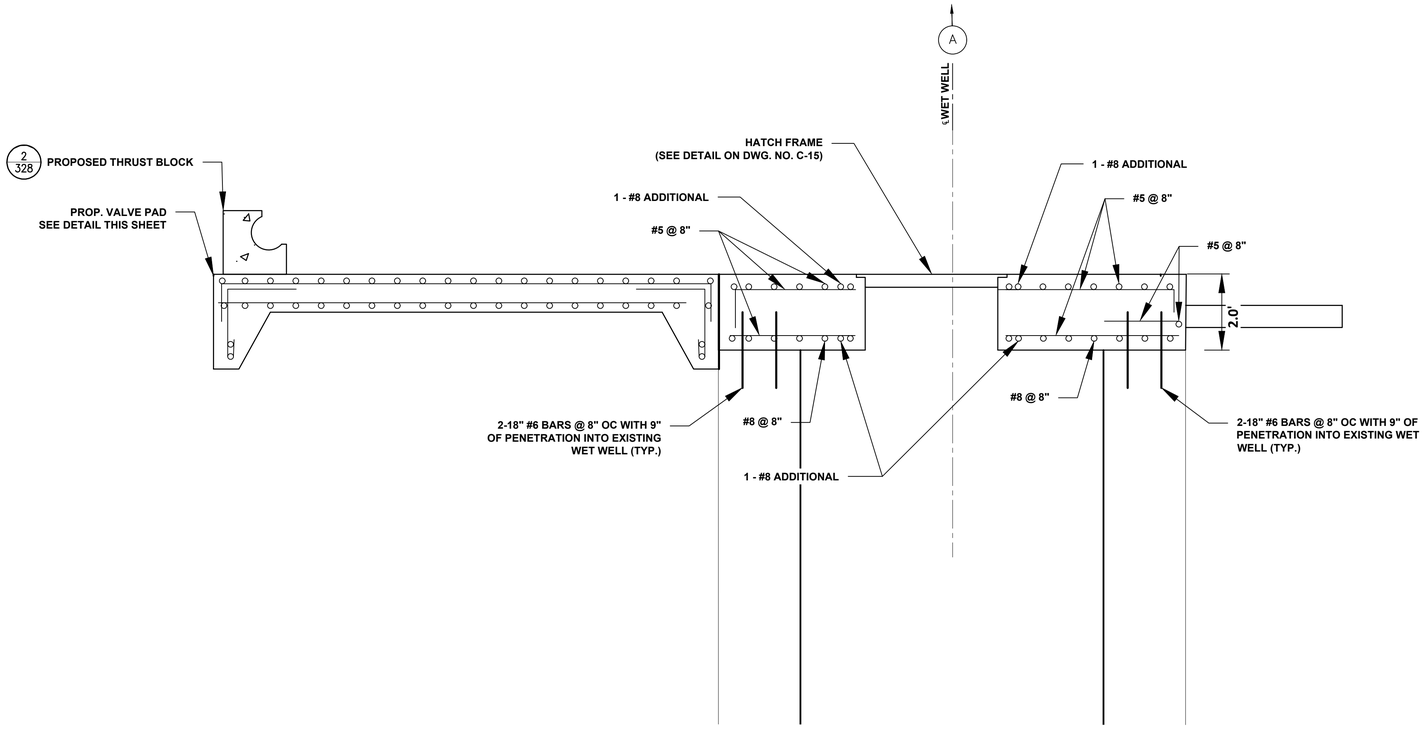

WET WELL TOP SLAB DETAIL

SCALE: 1" = 2' (SEE NOTE 2)

2' 0' 2'

SCALE

1" = 2'

NOTES:

1. CONTRACTOR TO CONFIRM SIZE AND LOCATION OF THE WET WELL HATCHES PER HATCH AND PUMP MANUFACTURER REQUIREMENTS
2. CONTRACTOR TO SUBMIT A WET WELL TOP SLAB STRUCTURAL PLAN SIGNED AND SEALED BY A REGISTERED ENGINEER IN THE STATE OF TEXAS.

NO.	DATE	REVISION	APP.

LEGEND

- DETAIL NO. / SHEET NO.
- EXIST. CONCRETE
- PROP. CONCRETE

IDS Engineering Group
13430 NW. Freeway, Suite 700
Houston, Tx. 77040
713.462.3178
TxEng Firm 2726 | TxSurv Firm 10110700

SURVEYED BY: KUO & ASSOCIATES, INC.
TBPE FIRM #F-4578; TBPLS FIRM #1007560

THIS DOCUMENT IS RELEASED FOR THE PURPOSE OF REVIEW UNDER THE AUTHORITY OF MARCEL KHOUW, P.E. 101807 ON 05/27/2026. IT IS NOT TO BE USED FOR CONSTRUCTION PURPOSES.

CITY OF HOUSTON

HOUSTON PUBLIC WORKS

LIFT STATION RENEWAL AND REPLACEMENT FY 2023

MUD NO. 67 LIFT STATION TOP SLAB DETAIL

WBS NUMBER	FOR CITY OF HOUSTON USE ONLY
R-000267-0179-4	
DRAWING SCALE	
HORIZ: 1" = 2' VERT: N/A	
CITY OF HOUSTON PM	
NAWARAJ PANTA, P.E.	

DWG. NO.	SHEET NO.
MUD-C-11	232 OF 361

FILE PATH: \\idseg.com\FS\Projects\0000\005708500 CoH Lift Stations - FY 2023\CAD\DWG\PRODUCTION\232-MUD No 67 TOP SLAB DETAIL.dwg

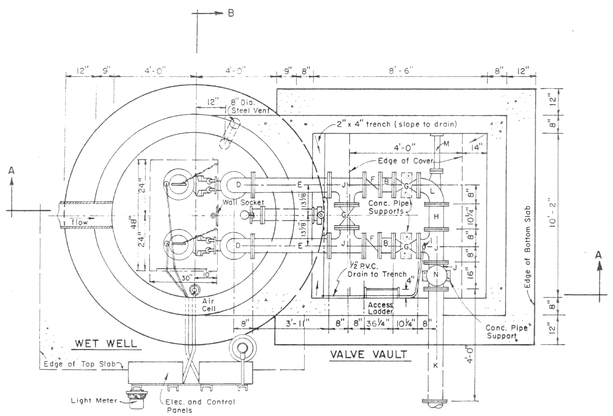

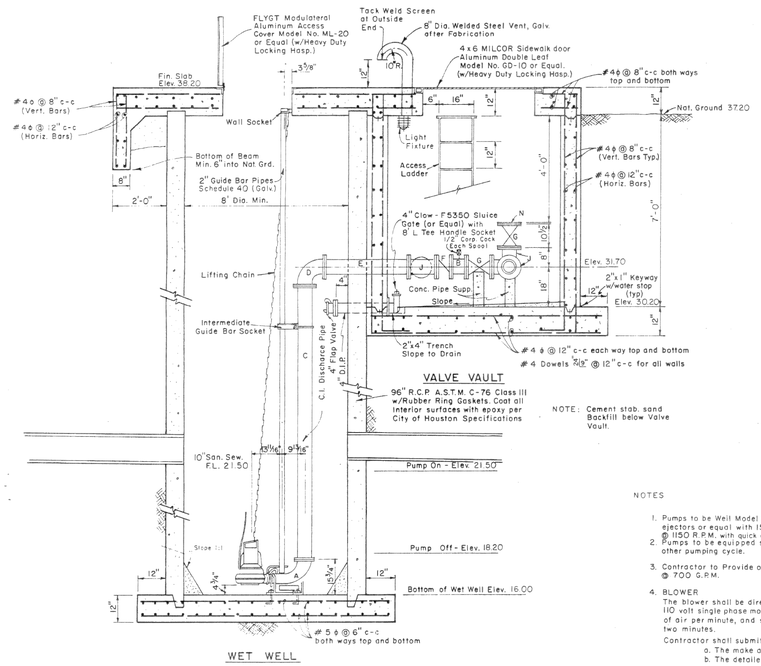

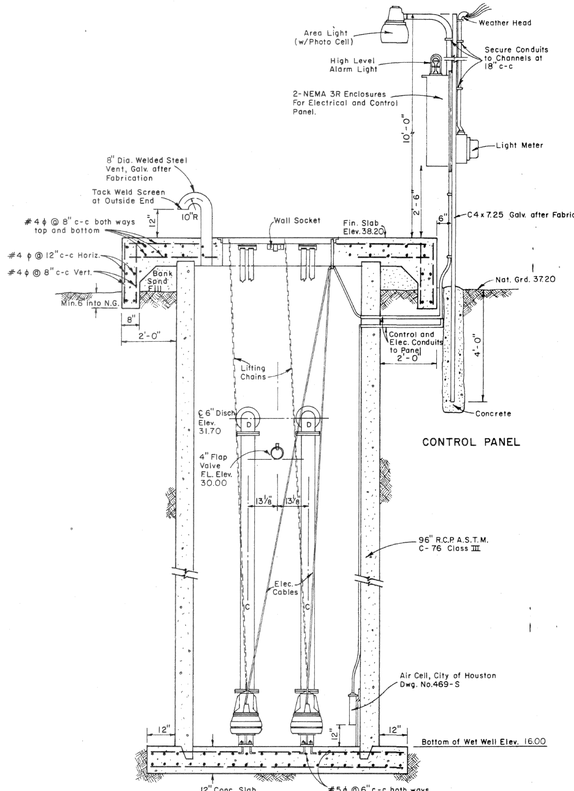

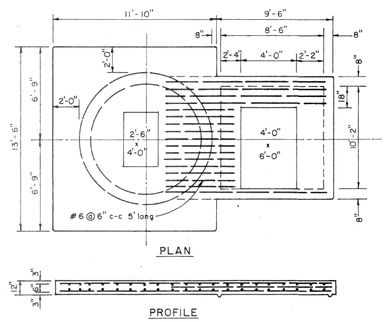

NOTES

1. Pumps to be Weil Model C-2606I6 submersible sewage ejectors or equal with 15 H.P. motors rated at 400 G.P.M. @ 1150 R.P.M. with quick disconnect system.
2. Pumps to be equipped so that they alternate on every other pumping cycle.
3. Contractor to Provide one set extra 11" impellers to rate pumps @ 700 G.P.M.
4. BLOWER
   The blower shall be direct connected to a 1/4 H.P., 1750 R.P.M., 110 volt single phase motor, capable of delivering 400 cubic feet of air per minute, and supply a complete change of air every two minutes.
   Contractor shall submit to Engineer for approval:
   a. The make and model of blower.
   b. The detailed proposed installation of blower.
5. LIGHTS
   2-150 Watt Multi Vaporproof Fixtures with Guard, Cat. 3225 or equal to be equipped with Door Switch so that Light and Blower are on when door is open.

PIPE FITTING SCHEDULE		
ITEM	DESCRIPTION	LENGTH
A	6" x 90° Bend with Base (By Pump Supplier)	15¾ B/F
B	6" D.I. Pipe Nipple	12" F/F
C	6" D.I. Pipe Nipple	14'-5½" F/F
D	6" x 90° Short Radius Bend	8" F/F
E	6" D.I. Pipe Nipple	47" F/F
F	6" FLYGT HDL Ball Check Valve, Type 2016	24¼" F/F
G	6" Homestead Non-Lubricated Ballcentric Valve	10¾ F/F
H	6" D.I. Pipe Nipple	10¾ F/F
I	Corporation Stop, Tapped into Top of 6"x6"x6" Tee	N/A
J	6"x6"x6" Tee	16" F/F
K	6" D.I. Pipe Nipple	48" F/PE
L	6" x 90° Short Radius Base Bend	8" F/F
M	2" Pipe Brace	Fld. Meas.
N	6" Blind Flange	1"

KEY MAP 617 A-B-E-F

ELLINGTON GULF BREEZE PARK

HARRIS COUNTY MUNICIPAL UTILITY DISTRICT NO. 67

LIFT STATION DETAILS

L. C. LOPER & ASSOCIATES, INC.
CONSULTING ENGINEER
HOUSTON, TEXAS
666-2838

3/4/17

SHEET 8 OF 13

NO.	DATE	REVISION	APP.

IDS Engineering Group
13430 NW. Freeway, Suite 700
Houston, Tx. 77040
713.462.3178
TxEng Firm 2726 | TxSurv Firm 10110700

SURVEYED BY: KUO & ASSOCIATES, INC.
TBPE FIRM #F-4578; TBPLS FIRM #1007560

THIS DOCUMENT IS RELEASED FOR THE PURPOSE OF REVIEW UNDER THE AUTHORITY OF MARCEL KHOUW, P.E. 101807 ON 05/27/2026. IT IS NOT TO BE USED FOR CONSTRUCTION PURPOSES.

CITY OF HOUSTON
HOUSTON PUBLIC WORKS

LIFT STATION RENEWAL AND REPLACEMENT FY 2023

EXISTING LIFT STATION RECORD DRAWING

WBS NUMBER	FOR CITY OF HOUSTON USE ONLY
R-000267-0179-4	
DRAWING SCALE	
HORIZ: AS NOTED VERT: N/A	
CITY OF HOUSTON PM	
NAWARAJ PANTA, P.E.	
DWG. NO. MUD-C-12	SHEET NO. 233 OF 361

FOR REFERENCE ONLY

PLOTTED: 5/13/2026 6:42 PM
FILE PATH: \\idseg.com\FS\Projects\0000\005708500 CoH Lift Stations - FY 2023\CAD\DWG\PRODUCTION\233-MUD No 67 RECORD DWG.dwg

PLOTTED: 5/12/2026 8:28 PM

FILE PATH: O:\H8108_Lift Station Rehabilitation And Reconstruction (IDS)\6 Drawings\Electrical\Working\MUD #67\H8108_MUD-E-01.dwg

NOTES BY SYMBOL "#":

1. EXISTING SERVICE POLE, SERVICE RACK , CONTROL PANEL AND WIMAX BOX TO BE DEMOLISHED AND REMOVED.

GENERAL NOTES:

1. THE OWNER HAS THE RIGHT OF FIRST REFUSAL TO THE EQUIPMENT BEING REMOVED. CONTRACTOR SHALL DELIVER THE EQUIPMENT WHICH OWNER WISHES TO KEEP AT LOCATION DESIGNATED BY THE OWNER. SEE SPECIFICATIONS SECTION 16060 FOR ELECTRICAL DEMOLITION.

SCALE: 1"= 3'

0' 3' 6' 9'

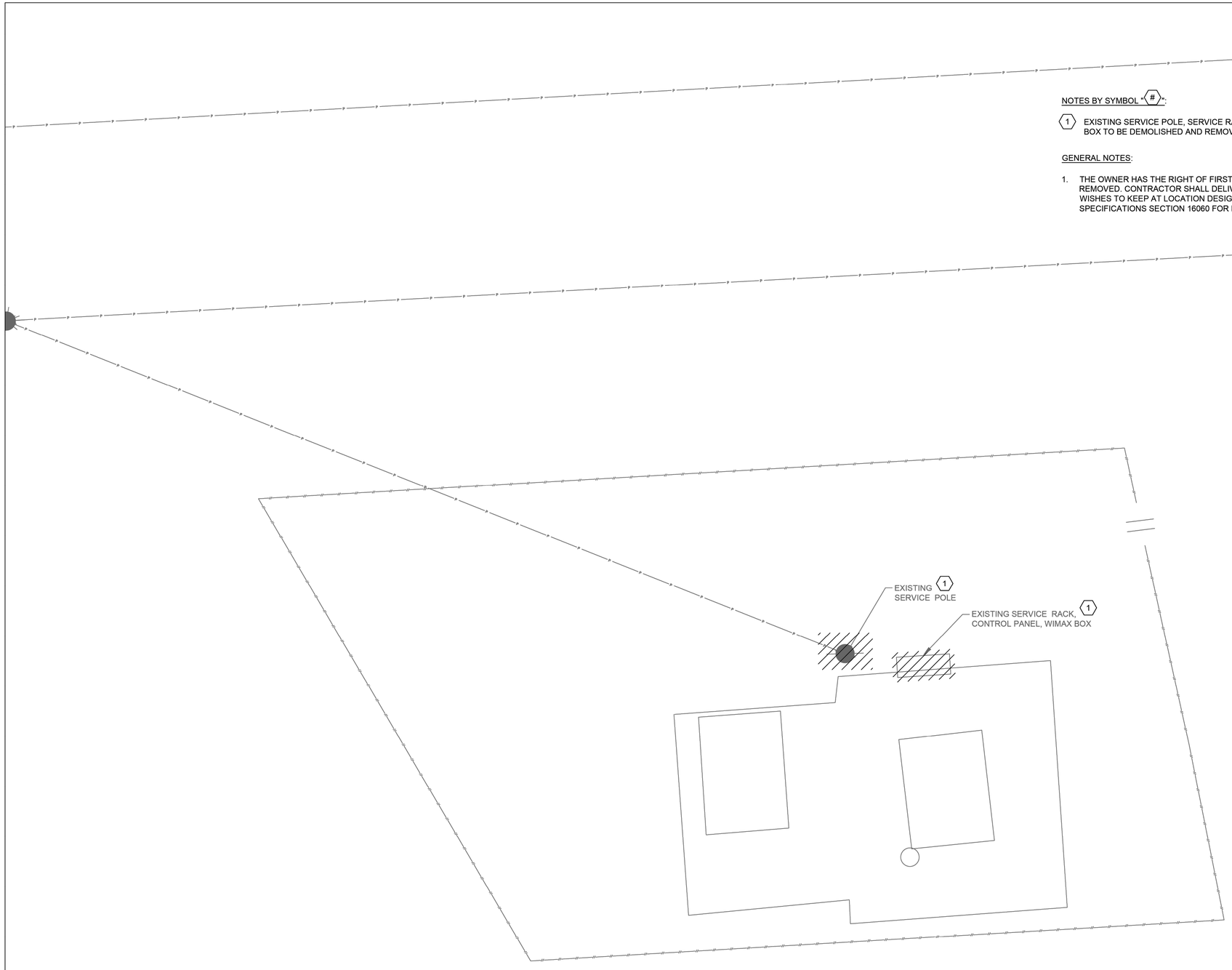

MUD #67 ELECTRICAL EXISTING SITE

PLAN

1"= 3'-0"



EXISTING SERVICE POLE & RACK

PHOTOGRAPH A 1

NTS



EXISTING CONTROL PANEL

PHOTOGRAPH B 1

NTS



EXISTING WIMAX BOX

PHOTOGRAPH B 1

NTS

FOR INTERIM REVIEW ONLY NOT INTENDED FOR PERMIT, BIDDING OR CONSTRUCTION PURPOSES.
ENGINEER:
HOSS FOROUZAN
P.E. SERIAL NO.77748
05/18/2026

GAI
Gupta & Associates, Inc.
CONSULTING ENGINEERING
Registration No. F-2593
302 Dennis St., Houston, Texas 77006
Tel: 713-636-2936
Fax: 713-636-2987
email: hforouzan@gaiconsulting.com

IDS Engineering Group
13430 NW. Freeway
Suite 700
Houston, Tx. 77040
713.462.3178
TxEng Firm 2726
TxSurv Firm 10110700

CITY OF HOUSTON
HOUSTON PUBLIC WORKS

LIFT STATION RENEWAL AND REPLACEMENT FY 2023

MUD NO.67 LIFT STATION ELECTRICAL DEMOLITION SITE PLAN

WBS NUMBER	FOR CITY OF HOUSTON USE ONLY
R-000267-0179-4	
DRAWING SCALE	
HORIZ:1"=3'-0" VERT1"=3'-0"	
CITY OF HOUSTON PM	
NAWARAJ PANTA, P.E.	
SHEET NO. 234 OF 361	

DWG. NO.
MUD-E-01

NO.	DATE	REVISION	APP.

IDS JOB No. 0057-085-00

PLOTTED: 5/12/2026 8:28 PM

TO CPE TRANSFORMER POLE

PROPOSED ELECTRIC SERVICE POLE

PROPOSED SERVICE RACK

GROUND WELL (TYP.)

GROUND ROD (TYP.)

6 (TYP.)

CONTROL PANEL

COMMUNICATION POLE WITH "D" FIXTURE 2

PUMP J-BOXES (TYP.)

REFER TO DRAWING MUD-E-5 FOR WORK IN THIS AREA

PROVIDE FLEX BONDING JUMPERS ACROSS GATE HINGES (TYP.)

#4/0 BARE COPPER GROUND, (TYP.) 5

FENCE

SCALE: 1"= 4'

0' 4' 8' 12'

NOTES:

1. THE ELECTRICAL INSTALLATION IN THE WET WELL SHALL BE EXPLOSION PROOF, IN ACCORDANCE WITH THE NATIONAL ELECTRICAL CODE FOR CLASS I, DIVISION 1 LOCATIONS.
2. YARD LIGHT CONTROLLED BY LIGHTING SWITCH.
3. TYPE "B" FIXTURE TO BE INSTALLED ON THE POLE PROVIDING WIRES FOR THE "B" LIGHT.
4. INSIDE WETWELL RATED NEMA CLASS , DIV. 1, OUTSIDE ABOVE GROUND, AROUND WETWELL RATED CLASS 1, DIV. 2 ACCORDING TO NFPA 820.
5. GROUNDING LOOP SHALL BE BURIED 30" BELOW FINISHED GRADE.

NO.	DATE	REVISION	APP.

DUCTBANK SECTION A NTS

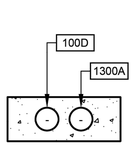

DUCTBANK SECTION B NTS

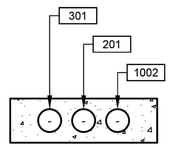

DUCTBANK SECTION C NTS

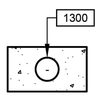

DUCTBANK SECTION D NTS

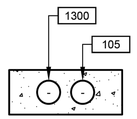

DUCTBANK SECTION E NTS

FOR INTERIM REVIEW ONLY NOT INTENDED FOR PERMIT, BIDDING OR CONSTRUCTION PURPOSES.
ENGINEER:
HOSS FOROUZAN
P.E. SERIAL NO.77748
05/18/2026

GAI
Gupta & Associates, Inc.
CONSULTING ENGINEERING
Registration No. F-2593
302 Dennis St.,
Houston, Texas 77006
Tel: 713-636-2936
Fax: 713-636-2987
email: hforouzan@gaiconsulting.com

IDS Engineering Group
13430 NW. Freeway
Suite 700
Houston, Tx. 77040
713.462.3178
TxEng Firm 2726
TxSurv Firm 10110700

CITY OF HOUSTON

HOUSTON PUBLIC WORKS

LIFT STATION RENEWAL AND REPLACEMENT FY 2023

MUD NO.67 LIFT STATION PROPOSED ELECTRICAL SITE PLAN

WBS NUMBER	FOR CITY OF HOUSTON USE ONLY
R-000267-0179-4	
DRAWING SCALE	
HORIZ:1"=4'-0" VERT1"=4'-0"	
CITY OF HOUSTON PM	
NAWARAJ PANTA, P.E.	
SHEET NO. 235 OF 361	

DWG. NO. MUD-E-02

IDS JOB No. 0057-085-00

FILE PATH: O:\H8108_Lift Station Rehabilitation And Reconstruction (IDS)\6 Drawings\Electrical\Working\MUD #67\H8108_MUD-E-02.dwg

PLOTTED: 5/12/2026 8:28 PM

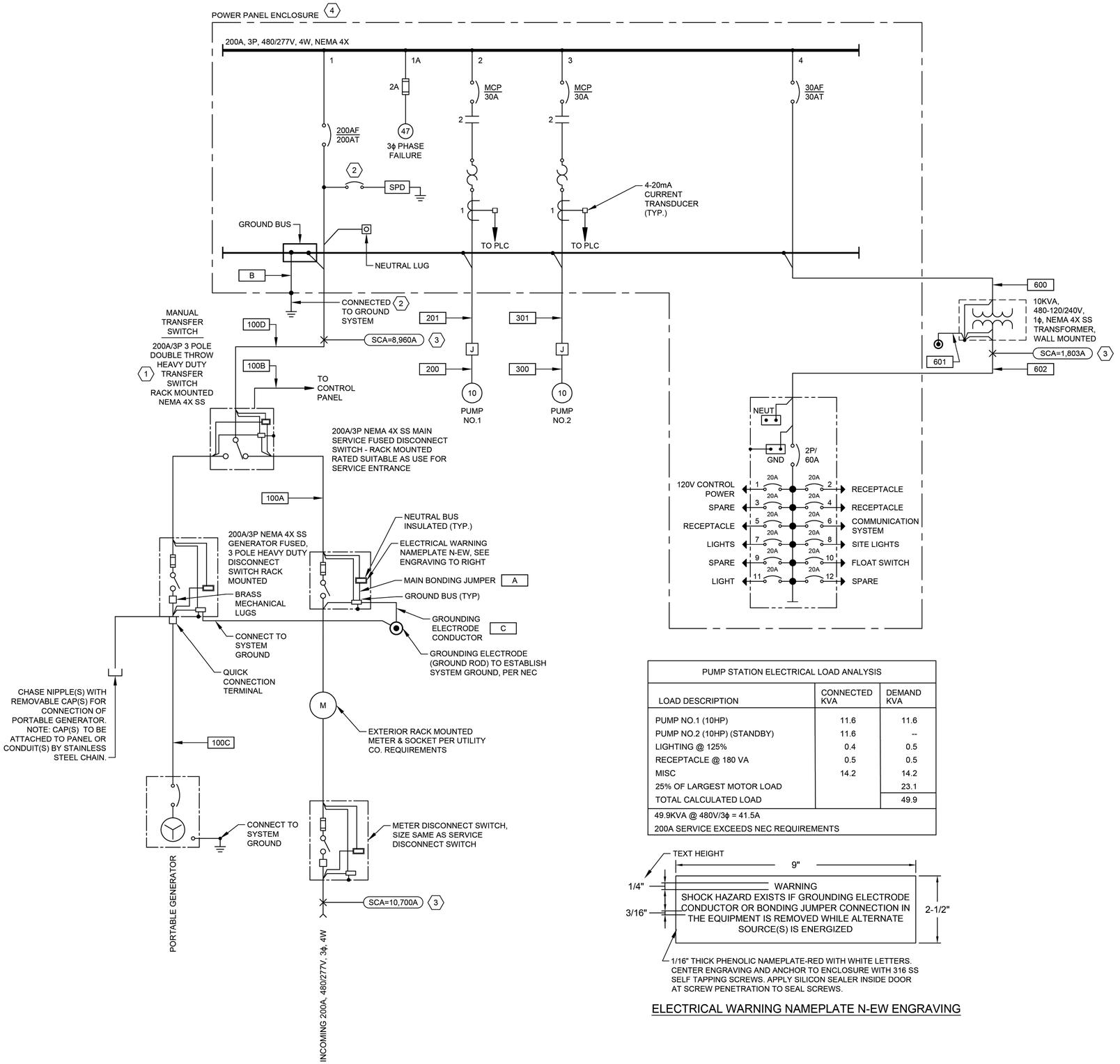

NOTES:

1. PROVIDE A NORMALLY OPEN (NO) AUXILIARY CONTACT ON BOTH ON POSITIONS.
2. PROVIDE BREAKER ACCORDING TO MANUFACTURER'S REQUIREMENTS.
3. POINT TO POINT METHOD IS USED FOR SHORT CIRCUIT CURRENT CALCULATION.
4. CONTRACTOR SHALL PROVIDE A PERMANENTLY AFFIXED LABEL (2" X 3"0 SHOWING THE AVAILABLE FAULT CURRENT AND CALCULATION DATE. THE LABEL SHALL BE BLUE LETTERING ON A CONTRASTING BACKGROUND.
5. THE INSULATION TYPES OF ALL ELECTRICAL CONDUCTORS USED IN THE PROJECT HAVE BEEN SPECIFIED IN ELECTRICAL SPECIFICATIONS (16120, 16121, AND 16122). THE TYPES OF CONDUITS USED IN THE PROJECT HAS BEEN SPECIFIED IN ELECTRICAL SPECIFICATIONS 16111.

PUMP STATION ELECTRICAL LOAD ANALYSIS		
LOAD DESCRIPTION	CONNECTED KVA	DEMAND KVA
PUMP NO.1 (10HP)	11.6	11.6
PUMP NO.2 (10HP) (STANDBY)	11.6	--
LIGHTING @ 125%	0.4	0.5
RECEPTACLE @ 180 VA	0.5	0.5
MISC	14.2	14.2
25% OF LARGEST MOTOR LOAD		23.1
TOTAL CALCULATED LOAD		49.9
49.9KVA @ 480V/3ϕ = 41.5A		
200A SERVICE EXCEEDS NEC REQUIREMENTS		

1/16" THICK PHENOLIC NAMEPLATE-RED WITH WHITE LETTERS. CENTER ENGRAVING AND ANCHOR TO ENCLOSURE WITH 316 SS SELF TAPPING SCREWS. APPLY SILICON SEALER INSIDE DOOR AT SCREW PENETRATION TO SEAL SCREWS.

ELECTRICAL WARNING NAMEPLATE N-EW ENGRAVING

NO.	DATE	REVISION	APP.

FOR INTERIM REVIEW
ONLY NOT INTENDED FOR
PERMIT, BIDDING OR
CONSTRUCTION PURPOSES.
ENGINEER:
HOSS FOROUZAN
P.E. SERIAL NO.77748
05/18/2026

GAI
Gupta & Associates, Inc.
CONSULTING ENGINEERING
Registration No. F-2593
302 Dennis St.,
Houston, Texas 77006
Tel: 713-636-2936
Fax: 713-636-2987
email: hforouzan@gaiconsulting.com

IDS Engineering Group
13430 NW. Freeway
Suite 700
Houston, Tx. 77040
713.462.3178
TxEng Firm 2726
TxSurv Firm 10110700

CITY OF HOUSTON
HOUSTON PUBLIC WORKS

LIFT STATION RENEWAL AND REPLACEMENT FY 2023

MUD NO.67 LIFT STATION SINGLE-LINE DIAGRAM

WBS NUMBER	FOR CITY OF HOUSTON USE ONLY
R-000267-0179-4	
DRAWING SCALE	
HORIZ: NONE VERT: NONE	
CITY OF HOUSTON PM	
NAWARAJ PANTA, P.E.	
SHEET NO. 236 OF 361	

DWG. NO. MUD-E-03

IDS JOB No. 0057-085-00

FILE PATH: O:\H8108_Lift Station Rehabilitation And Reconstruction (IDS)\6 Drawings\Electrical\Working\MUD #67\H8108_MUD-E-03.dwg

PLOTTED: 5/12/2026 8:28 PM

FILE PATH: O:\H8108_Lift Station Rehabilitation And Reconstruction (IDS)\6 Drawings\Electrical\Working\MUD #67\H8108_MUD-E-04.dwg

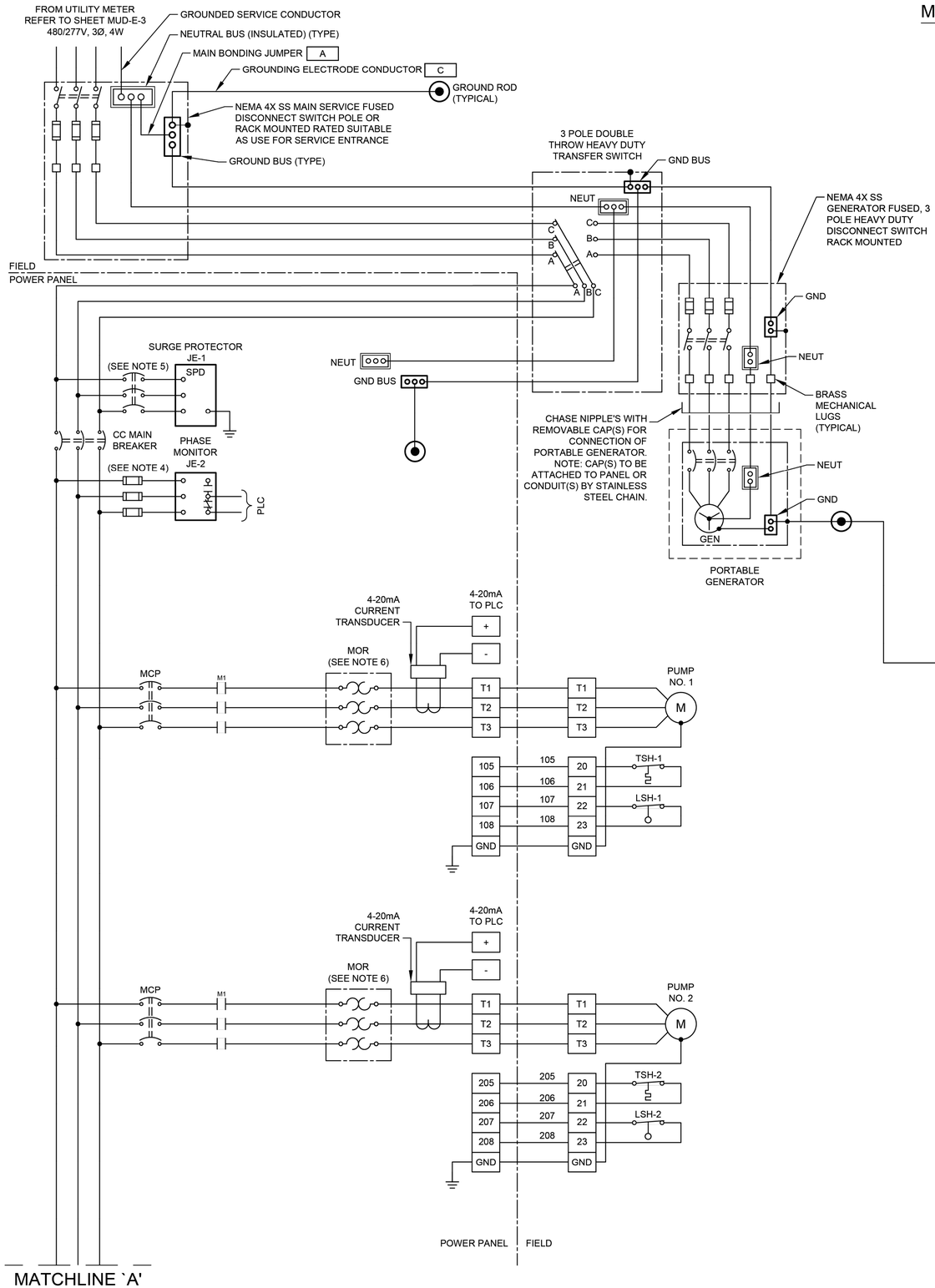

MATCHLINE `A'

POWER PANEL | FIELD

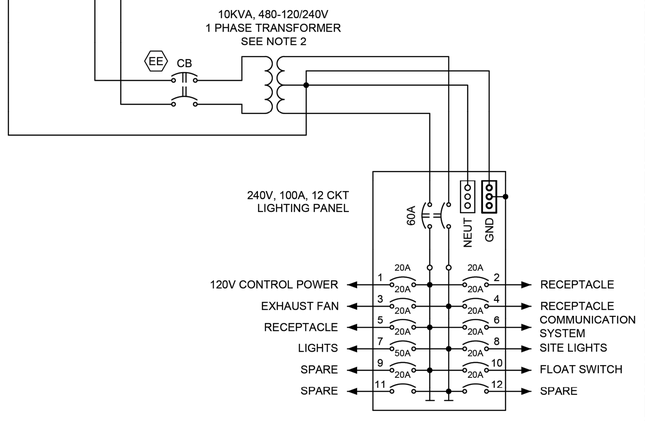

POWER WIRING DIAGRAM
NTS

NOTES:

1. UNLESS OTHERWISE INDICATED, ALL DEVICES WITHOUT FURTHER DESIGNATION ARE LOCATED AT THE MOTOR CONTROL CENTER (MCC).
2. CONTRACTOR TO REVISE DWG. BASED ON MANUFACTURE AND SIZE.
3. CONTRACTOR SHALL TERMINATE POWER & CONTROL WIRES PER MANUFACTURER'S REQUIREMENTS.
4. PROVIDE FUSE SIZE ACCORDING TO MANUFACTURER'S REQUIREMENTS.
5. PROVIDE BREAKER SIZE ACCORDING TO MANUFACTURER'S REQUIREMENTS.
6. THE COMBINATION OF CT AND MOTOR OVERLOAD RELAY IF REQUIRED.

NO.	DATE	REVISION	APP.

FOR INTERIM REVIEW
ONLY NOT INTENDED FOR
PERMIT, BIDDING OR
CONSTRUCTION PURPOSES.
ENGINEER:
HOSS FOROUZAN
P.E. SERIAL NO.77748
05/18/2026

GAI
Gupta & Associates, Inc.
CONSULTING ENGINEERING
Registration No. F-2593
302 Dennis St.,
Houston, Texas 77006
Tel: 713-636-2936
Fax: 713-636-2987
email: hforouzan@gaiconsulting.com

IDS Engineering Group
13430 NW. Freeway
Suite 700
Houston, Tx. 77040
713.462.3178
TxEng Firm 2726
TxSurv Firm 10110700

CITY OF HOUSTON
HOUSTON PUBLIC WORKS

LIFT STATION RENEWAL AND REPLACEMENT FY 2023

MUD NO.67 LIFT STATION THREE-LINE DIAGRAM

WBS NUMBER	FOR CITY OF HOUSTON USE ONLY
R-000267-0179-4	
DRAWING SCALE	
HORIZ: NONE VERT: NONE	
CITY OF HOUSTON PM	
NAWARAJ PANTA, P.E.	
SHEET NO. 237 OF 361	

DWG. NO. MUD-E-04

IDS JOB No. 0057-085-00

PLOTTED: 5/13/2026 10:27 AM

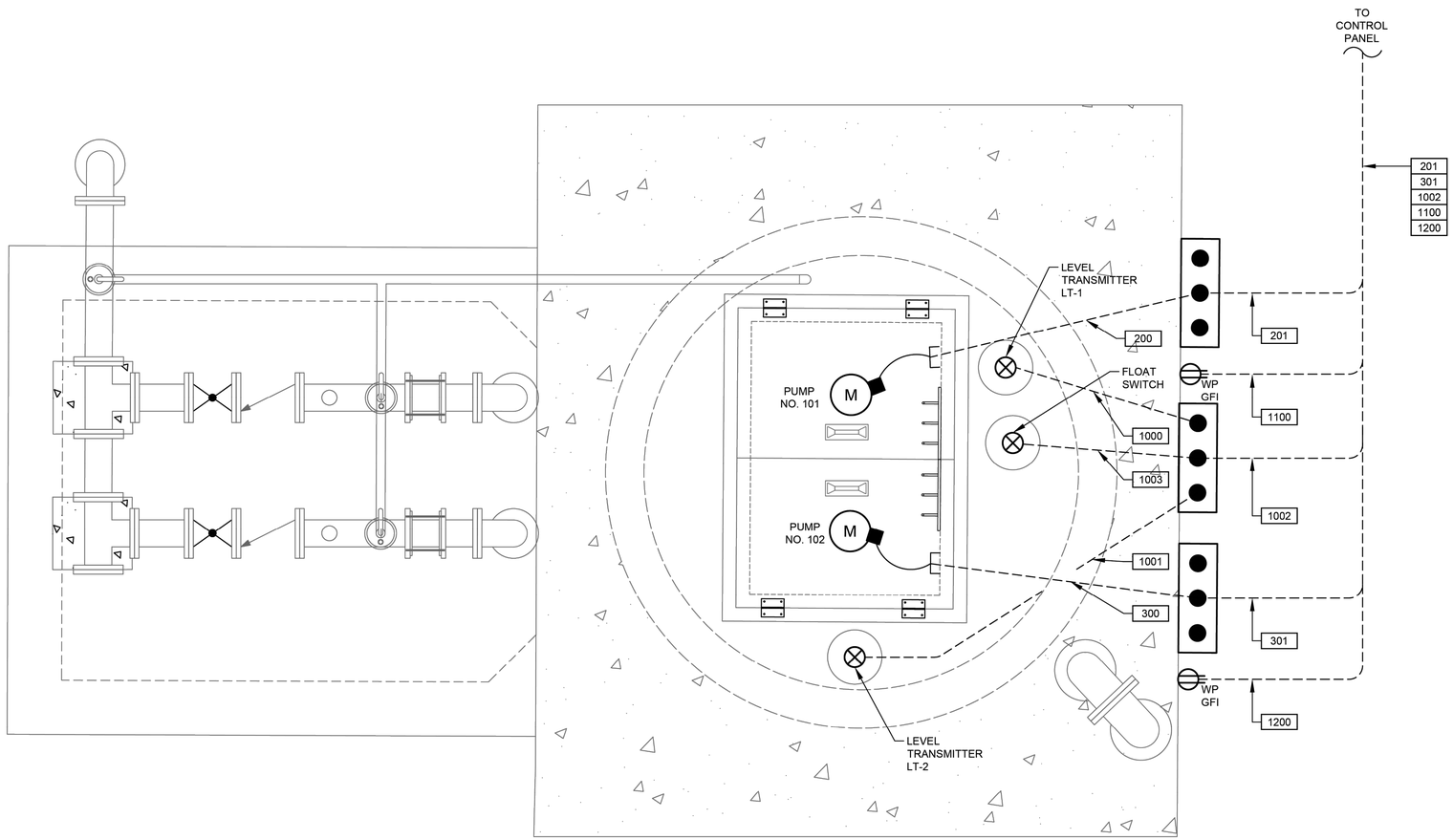

MUD NO.67 LIFT STATION
ELECTRICAL ENLARGED

PLAN

3/4"= 1'-0"

6" 0 1 2

SCALE: 3/4" = 1'-0"

NO.	DATE	REVISION	APP.

FOR INTERIM REVIEW
ONLY NOT INTENDED FOR
PERMIT, BIDDING OR
CONSTRUCTION PURPOSES.
ENGINEER:
HOSS FOROUZAN
P.E. SERIAL NO.77748
05/18/2026

GAI
Gupta & Associates, Inc.
CONSULTING ENGINEERING
Registration No. F-2593
302 Dennis St.,
Houston, Texas 77006
Tel: 713-636-2936
Fax: 713-636-2987
email: hforouzan@gaiconsulting.com

IDS Engineering Group
13430 NW. Freeway
Suite 700
Houston, Tx. 77040
713.462.3178
TxEng Firm 2726
TxSurv Firm 10110700

CITY OF HOUSTON

HOUSTON PUBLIC WORKS

LIFT STATION RENEWAL AND REPLACEMENT FY 2023

MUD NO.67 LIFT STATION ELECTRICAL ENLARGED PLAN

WBS NUMBER	FOR CITY OF HOUSTON USE ONLY
R-000267-0179-4	
DRAWING SCALE	
HORIZ 3/4"=1'-0"	
CITY OF HOUSTON PM	
NAWARAJ PANTA, P.E.	
DWG. NO. MUD-E-05	SHEET NO. 238 OF 361

IDS JOB No. 0057-085-00

FILE PATH: O:\H8108_Lift Station Rehabilitation And Reconstruction (IDS)\6 Drawings\Electrical\Working\MUD #67\H8108_MUD-E-05.dwg

PLOTTED: 5/12/2026 8:29 PM

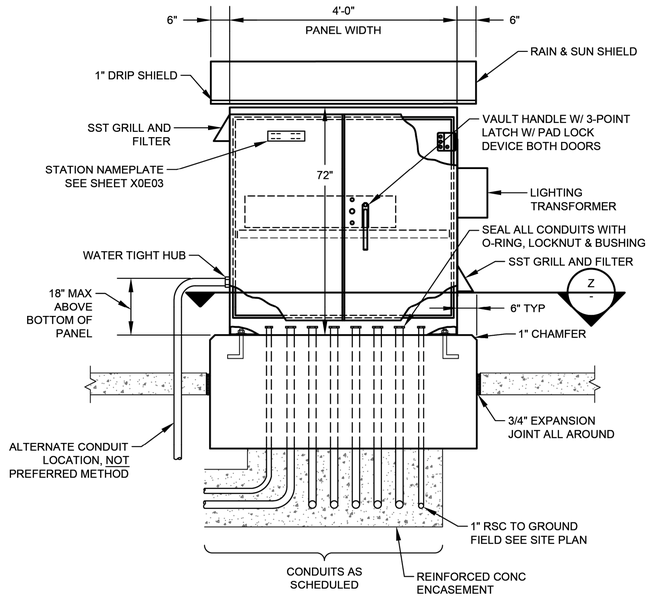

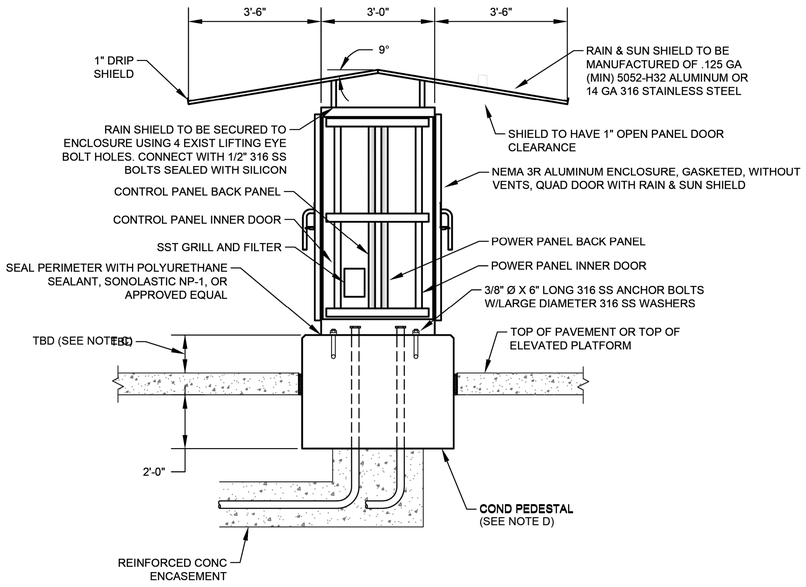

NOTES:

1. SEE SHEET MUD-I-4 FOR EQUIPMENT SCHEDULE.
2. REFER TO SPEC 13325-8 FOR PANEL DIMENSIONS.
3. EXPANSION JOINT FITTINGS AS REQUIRED.
4. REFER TO SERVICE RACK FOR DETAIL.
5. REFER TO STRUCTURAL DRAWINGS .

CONTROL CABINET ENCLOSURE WITH CONCRETE PEDESTAL FOUNDATION

(SEE NOTE 6)

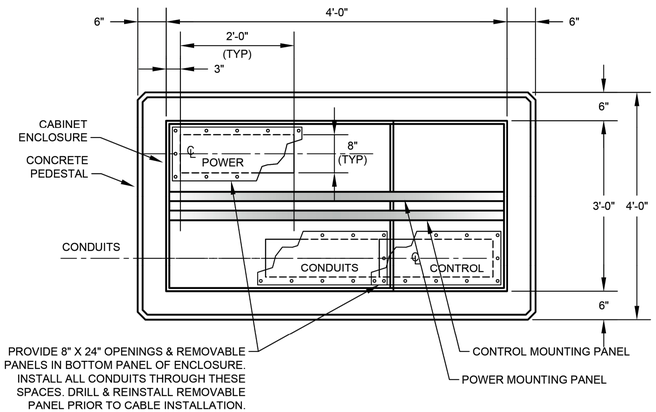

SECTION Z / - NTS

NO.	DATE	REVISION	APP.

FOR INTERIM REVIEW
ONLY NOT INTENDED FOR
PERMIT, BIDDING OR
CONSTRUCTION PURPOSES.
ENGINEER:
HOSS FOROUZAN
P.E. SERIAL NO.77748
05/18/2026

GAI
Gupta & Associates, Inc
CONSULTING ENGINEERING
Registration No. F-2593
302 Dennis St.,
Houston, Texas 77006
Tel: 713-636-2936
Fax: 713-636-2987
email: hforouzan@gaiconsulting.com

IDS Engineering Group
13430 NW. Freeway
Suite 700
Houston, Tx. 77040
713.462.3178
TxEng Firm 2726
TxSurv Firm 10110700

CITY OF HOUSTON
HOUSTON PUBLIC WORKS

LIFT STATION RENEWAL
AND REPLACEMENT FY 2023

MUD NO.67 LIFT STATION CONTROL CABINET ENCLOSURE DETAIL

WBS NUMBER	FOR CITY OF HOUSTON USE ONLY
R-000267-0179-4	
DRAWING SCALE	
HORIZ: NTS VERT: NTS	
CITY OF HOUSTON PM	
NAWARAJ PANTA, P.E.	
SHEET NO. 239 OF 361	

DWG. NO. MUD-E-06

IDS JOB No. 0057-085-00

FILE PATH: O:\H8108_Lift Station Rehabilitation And Reconstruction (IDS)\6 Drawings\Electrical\Working\MUD #67\H8108_MUD-E-06.dwg

PLOTTED: 5/12/2026 8:29 PM

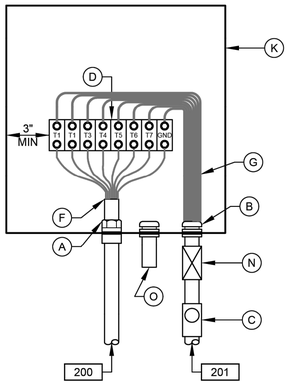

PUMP NO.1
JUNCTION BOX

DETAIL 3
NTS
(SEE NOTE 7)

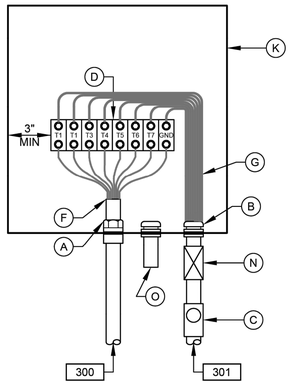

PUMP NO.2
JUNCTION BOX

DETAIL 4
NTS
(SEE NOTE 7)

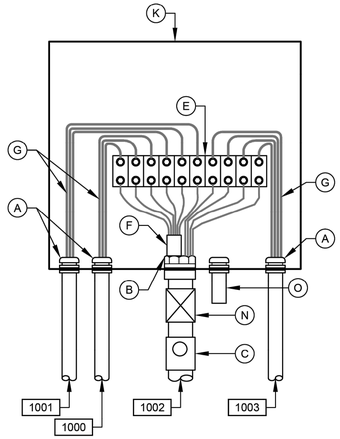

LEVEL TRANSMITTER
JUNCTION BOX

DETAIL 5
NTS
(SEE NOTE 7)

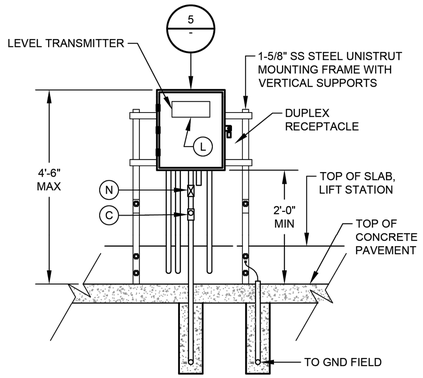

DETAIL 6
NTS
(SEE NOTE 9 & 12)

NOTES:

1. NAMEPLATES SHALL BE MOUNTED TO JUNCTION BOXES USING 316 STAINLESS STEEL HARDWARE.
2. MAINTAIN MINIMUM SEPARATION REQUIRED UNDER NEC ARTICLE 504, BETWEEN INTRINSICALLY SAFE CONTROL WIRING AND NON INTRINSICALLY SAFE MOTOR FEEDER WIRING.
3. UNLESS OTHERWISE NOTED, ALL EXTERIOR EXPOSED CONDUITS SHALL BE PVC COATED ALUMINUM.
4. UNLESS OTHERWISE NOTED, ALL NUTS, BOLTS, SCREWS WASHERS, ETC SHALL BE TYPE 316 STAINLESS STEEL.
5. ALL UNDERGROUND CONDUITS TO BE ENCASED IN REINFORCED CONCRETE DUCTBANK.
6. PROVIDE ANTI-CORROSIVE SPRAY ON ANY BARE METAL PARTS OR EXPOSED WIRE.
7. SEE WIRING SCHEMATICS FOR TERMINALS AND WIRE NUMBERS.
8. ANY CONDUIT REQUIRING A CSBE SEAL, SHALL BE A MINIMUM SIZE OF 2 1/2" PER CABLE.
9. DETAIL SHOWN MAY BE MODIFIED PER SITE SITUATION.
10. COORDINATE WITH WASTE WATER OPERATIONS ELECTRICAL ORGANIZATION FOR THE OPENING OF JUNCTION BOXES TO THE SIDE OF WET WELL IF REQUIRED DURING CONSTRUCTION.
11. THE ENCLOSURES WITH ELECTRICAL CIRCUITS SHALL BE A MINIMUM OF 5 FEET FROM ANY CLASSIFIED AREA, OTHERWISE EXPLOSION PROOF TYPE ENCLOSURES SHALL BE USED.

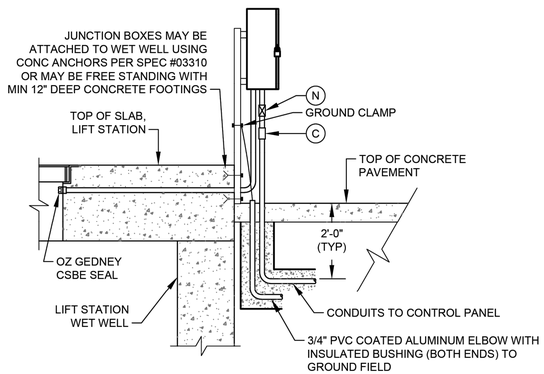

TYP SIDE VIEW FOR DETAIL 1, 2, & 6

(SEE NOTE 10)

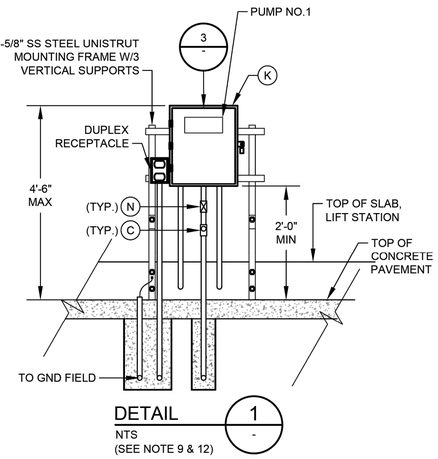

DETAIL 1
NTS
(SEE NOTE 9 & 12)

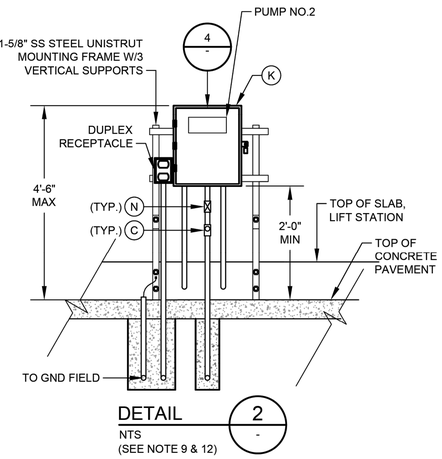

DETAIL 2
NTS
(SEE NOTE 9 & 12)

JUNCTION BOX EQUIPMENT SCHEDULE

A - OZ GEDNEY CSBE SEAL
B - WATERTIGHT CONDUIT HUB WITH INSULATED BUSHING
C - CLASS I, DIV 1, EXPLOSION PROOF SEAL INSTALLED PER NEC DIV 501
D - POWER TERMINAL BLOCK W/SCREW DOWN BOX LUGS
E - CONTROL TERM BLOCK W/SCREW DOWN BOX LUGS
F - MULTI-CONDUCTOR CABLE, REMOVE OUTER JACKET AS SHOWN
G - WIRING AS SCHEDULED
H - NOT USED.
I - NOT USED.
J - NOT USED
K - NEMA 4X STAINLESS STEEL JUNCTION BOX WITH GASKETED FRONT COVER, SINGLE QUARTER TURN, OIL-TIGHT LATCH AND PADLOCKING PROVISIONS, MINIMUM SIZE: 12"W X 16"H X 6"D
L - NAMEPLATE, SEE SPECIFICATIONES (SEE NAMEPLATE SCHEDULE)
M - NOT USED.
N - EXPANSION FITTING
O - DRAIN VENT

NO.	DATE	REVISION	APP.

FOR INTERIM REVIEW ONLY NOT INTENDED FOR PERMIT, BIDDING OR CONSTRUCTION PURPOSES.
ENGINEER:
HOSS FOROUZAN
P.E. SERIAL NO.77748
05/18/2026

GAI
Gupta & Associates, Inc.
CONSULTING ENGINEERING
Registration No. F-2593
302 Dennis St.,
Houston, Texas 77006
Tel: 713-636-2936
Fax: 713-636-2987
email: hforouzan@gaiconsulting.com

IDS Engineering Group
13430 NW. Freeway
Suite 700
Houston, Tx. 77040
713.462.3178
TxEng Firm 2726
TxSurv Firm 10110700

CITY OF HOUSTON
HOUSTON PUBLIC WORKS

LIFT STATION RENEWAL AND REPLACEMENT FY 2023

MUD NO.67 LIFT STATION JUNCTION BOX DETAILS

WBS NUMBER	FOR CITY OF HOUSTON USE ONLY
R-000267-0179-4	
DRAWING SCALE	
HORIZ: NTS VERT: NTS	
CITY OF HOUSTON PM	
NAWARAJ PANTA, P.E.	
SHEET NO. 240 OF 361	

DWG. NO. MUD-E-07

IDS JOB No. 0057-085-00

FILE PATH: O:\H8108_Lift Station Rehabilitation And Reconstruction (IDS)\6 Drawings\Electrical\Working\MUD #67\H8108_MUD-E-07.dwg

PLOTTED: 5/12/2026 8:29 PM

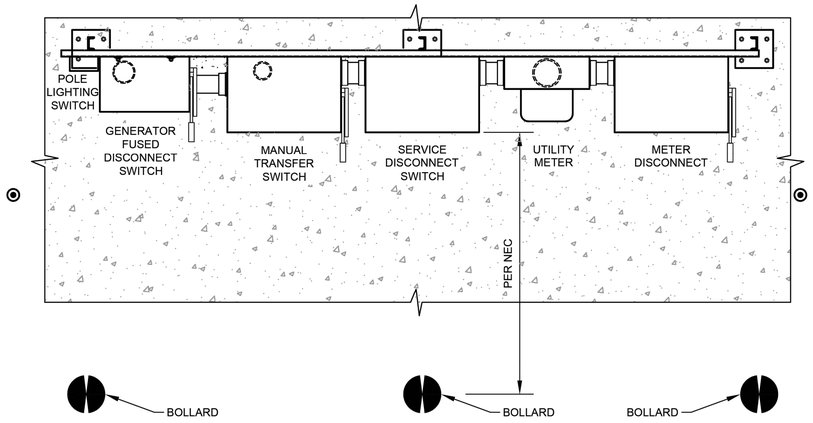

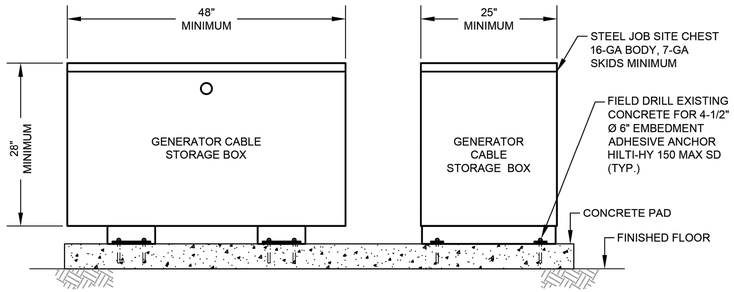

GENERATOR CABLE STORAGE BOX SIDE VIEW

DETAIL 20 NTS.

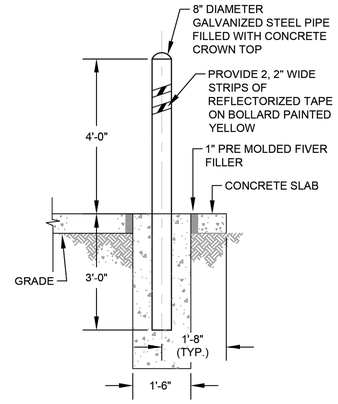

BOLLARD DETAIL

DETAIL 21 NTS.

ALLOWABLE DEVICE AMPACITY CHART DLO RHW-2 CAM-LOK CONNECTOR CABLE		
CABLE SIZE AWG	AMPS	CABLE LENGTH
#1	220	65 FEET
4/0	400	65 FEET

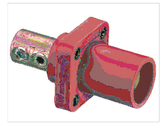

QUICK CONNECT FOR GENRATOR

PHOTOGRAPH 1 NTS.

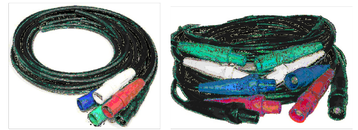

QUICK CONNECT FOR GENRATOR

PHOTOGRAPH 2 NTS.

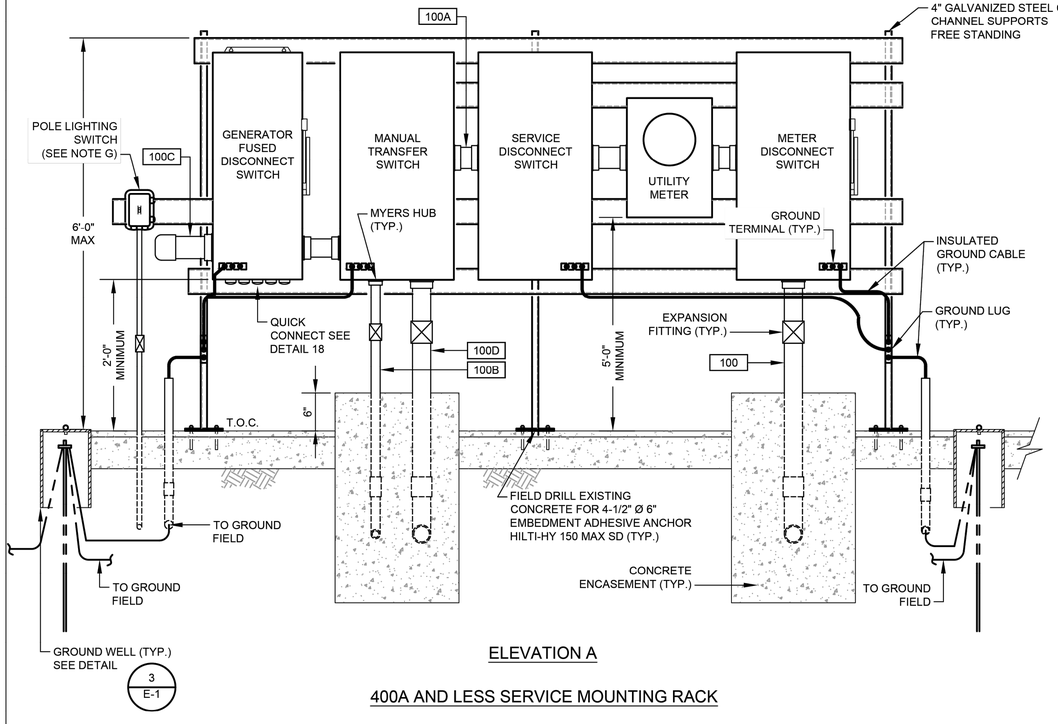

ELEVATION A

400A AND LESS SERVICE MOUNTING RACK

DETAIL 17 NTS.

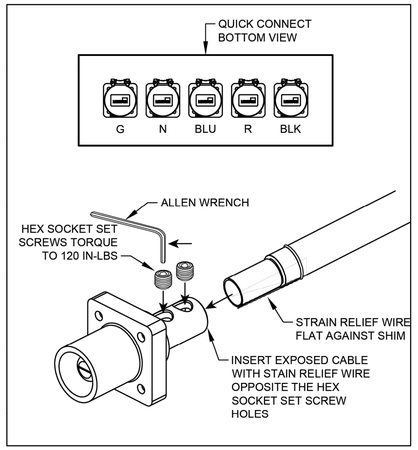

400A AND LESS FEMALE PLUG CABLE TERMINATION

DETAIL 18 NTS.

REFER TO PHOTO NO.1

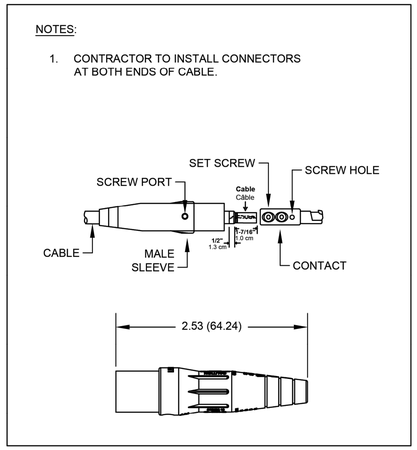

400A AND LESS MALE PLUG CABLE TERMINATION

DETAIL 19 NTS.

REFER TO PHOTO NO.2

NOTES:

1. CHASE NIPPLE(S) WITH REMOVABLE CAP(S) FOR CONNECTION OF PORTABLE GENERATOR. NOTE: CAP(S) TO BE ATTACHED TO PANEL OR CONDUIT(S) BY STAINLESS STEEL CHAIN.
2. T.O.C DEFINED AS TOP OF PAVEMENT OR TOP OF PANEL ENCLOSURE PEDESTAL WHICHEVER IS HIGHER. (SEE NOTE B).
3. PROVIDE CENTER BOLLARD WHEN SPACE BETWEEN OUTSIDE BOLLARDS IS GREATER THEN 4'-0".
4. CONTRACTOR SHALL COORDINATE THE LOCATION OF STORAGE BOX WITH COH WASTEWATER MAINTENANCE STAFF DURING CONSTRUCTION.

NO.	DATE	REVISION	APP.

FOR INTERIM REVIEW
ONLY NOT INTENDED FOR
PERMIT, BIDDING OR
CONSTRUCTION PURPOSES.
ENGINEER:
HOSS FOROUZAN
P.E. SERIAL NO.77748
05/18/2026

GAI
Gupta & Associates, Inc.
CONSULTING ENGINEERING
Registration No. F-2593
302 Dennis St.,
Houston, Texas 77006
Tel: 713-636-2936
Fax: 713-636-2987
email: hforouzan@gaiconsulting.com

IDS Engineering Group
13430 NW. Freeway
Suite 700
Houston, Tx. 77040
713.462.3178
TxEng Firm 2726
TxSurv Firm 10110700

CITY OF HOUSTON
HOUSTON PUBLIC WORKS

LIFT STATION RENEWAL AND REPLACEMENT FY 2023

MUD NO.67 LIFT STATION SERVICE RACK DETAIL

WBS NUMBER	FOR CITY OF HOUSTON USE ONLY
R-000267-0179-4	
DRAWING SCALE	
HORIZ: NTS VERT: NTS	
CITY OF HOUSTON PM	
NAWARAJ PANTA, P.E.	
SHEET NO. 241 OF 361	

DWG. NO. MUD-E-08

IDS JOB No. 0057-085-00

FILE PATH: O:\H8108_Lift Station Rehabilitation And Reconstruction (IDS)\6 Drawings\Electrical\Working\MUD #67\H8108_MUD-E-08.dwg

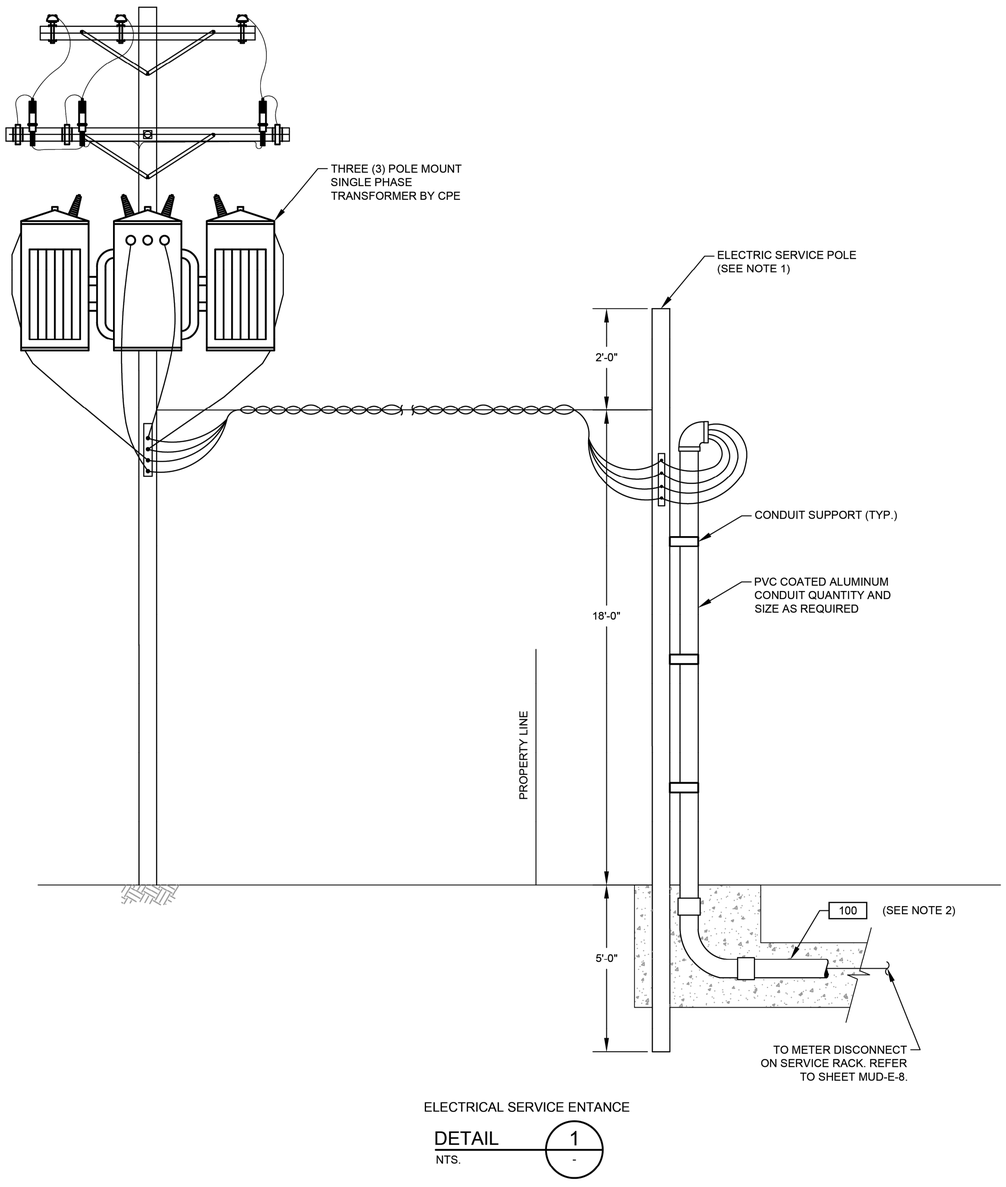

ELECTRICAL SERVICE ENTANCE

DETAIL 1
NTS. -

NOTES:

1. WOODEN POLE 20' LONG. TOP DIAMETER 6". BOTTOM DIAMETER 8" PROVIDED AND INSTALLED BY ELECTRICAL CONTRACTOR.
2. ELECTRICAL SERVICE FEEDER PROVIDED AND INSTALLED BY ELECTRICAL CONTRACTOR. COORDINATE WITH CPE FOR REQUIREMENTS OF THE INSTALLATION.

NO.	DATE	REVISION	APP.

FOR INTERIM REVIEW
ONLY NOT INTENDED FOR
PERMIT, BIDDING OR
CONSTRUCTION PURPOSES.
ENGINEER:
HOSS FOROUZAN
P.E. SERIAL NO.77748
05/18/2026

GAI
Gupta & Associates, Inc.
CONSULTING ENGINEERING
Registration No. F-2593
302 Dennis St.,
Houston, Texas 77006
Tel: 713-636-2936
Fax: 713-636-2987
email: hforouzan@gaiconsulting.com

IDS Engineering Group
13430 NW. Freeway
Suite 700
Houston, Tx. 77040
713.462.3178
TxEng Firm 2726
TxSurv Firm 10110700

CITY OF HOUSTON
HOUSTON PUBLIC WORKS

LIFT STATION RENEWAL AND REPLACEMENT FY 2023

MUD NO.67 LIFT STATION SERVICE POLE DETAIL

WBS NUMBER	FOR CITY OF HOUSTON USE ONLY
R-000267-0179-4	
DRAWING SCALE	
HORIZ: NTS VERT: NTS	
CITY OF HOUSTON PM	
NAWARAJ PANTA, P.E.	
SHEET NO. 242 OF 361	

DWG. NO. MUD-E-09

IDS JOB No. 0057-085-00

PLOTTED: 5/12/2026 8:29 PM
FILE PATH: O:\H8108_Lift Station Rehabilitation And Reconstruction (IDS)\6 Drawings\Electrical\Working\MUD #67\H8108_MUD-E-09.dwg

	DESCRIPTION	SERVICE		ROUTING			CONDUIT & WIRE SIZE
		VOLTAGE	AMPS OR HP	FROM	TO	VIA	
A	MAIN BONDING JUMPER	--	--	MAIN FUSED DISCONNECT NEUTRAL	MAIN FUSED DISCONNECT GROUND	--	#2 CU GND.
B	EQUIPMENT BONDING JUMPER	--	--	MCC/POWER PANEL ENCLOSURE	POWER/CONTROL PANEL & EQUIPMENT	--	#2 CU GND.
C	GROUNDED ELECTRODE CONDUCTOR	--	--	GROUNDING ELECTRODE	MAIN SERVICE FUSED DISCONNECT GROUNDING	--	#2 CU GND.
100	SERVICE ENTRANCE	480V	200A	UTILITY POWER SERVICE	METER DISCONNECT	--	4 #3/0 AWG., #2 GND., 2-1/2" C.
100A	UTILITY POWER ENTRANCE	480V	200A	SERVICE DISCONNECT SWITCH	MTS	--	4 #3/0 AWG., #2 GND., 2-1/2" C.
100B	NORMAL/EMERGENCY POWER STATUS	24VDC	--	MTS	CONTROL PANEL	--	4#14 AWG., #14 GND., 3/4"C.
100C	EMERGENCY POWER	480V	200A	GENERATOR DISCONNECT	PORTABLE GENERATOR	CAPPED CONDUIT	--
100D	MCC POWER	480V	--	MTS	CONTROL PANEL	--	4 #3/0 AWG., #2 GND., 2-1/2" C.
104	GROUND ELECTRODE CONDUCTOR	--	--	CONTROL PANEL	GROUND FIELD	--	#6 CU GND.
105	COMMUNICATION	--	--	COMMUNICATION POLE	CONTROL PANEL	--	1-1/2"C. CAT 5E
200	PUMP NO. 1 POWER	480V	10 HP	PUMP NO. 1	PUMP NO. 1 JUNCTION BOX	--	MANUFACTURER CABLE IN 2-1/2"C.
201	PUMP NO. 1 POWER	480V	10 HP	PUMP NO. 1 JUNCTION BOX	PUMP STARTER	--	3#10, #10 GND., 4#14., 2"C.
300	PUMP NO. 2 POWER	480V	10 HP	PUMP NO. 2	PUMP NO. 2 JUNCTION BOX	--	MANUFACTURER CABLE IN 2-1/2"C.
301	PUMP NO. 2 POWER	480V	10 HP	PUMP NO. 2 JUNCTION BOX	PUMP STARTER	--	3#10, #10 GND., 4#14, 2"C.
600	LIGHTING PANEL FEEDER	480V	30A	MOTOR CONTROL CENTER	LIGHTING TRANSFORMER	--	2#10, #10 GND., 3/4"C.
601	LIGHTING PANEL GROUND	--	--	LIGHTING PANEL	GROUND FIELD	--	#6 GND., 1"C.
602	LIGHTING PANEL FEEDER	120/240V	60A	LIGHTING TRANSFORMER	LIGHTING PANEL	--	3#4, #6 GND., 1-1/4" C.
1000	LEVEL TRANSMITTER	24VDC	--	TRANSMITTER JUNCTION BOX	TRANSMITTER JUNCTION BOX	--	MANUFACTURER'S CABLE IN 2-1/2"C
1001	LEVEL TRANSMITTER	24VDC	--	TRANSMITTER JUNCTION BOX	TRANSMITTER JUNCTION BOX	--	MANUFACTURER'S CABLE IN 2-1/2"C
1002	COMBINED LEVEL TRANSMITTERS & FLOAT SWITCH	24VDC	--	CONTROL PANEL	TRANSMITTER JUNCTION BOX	--	2-TRI, 4#14, 2" C.
1003	WELL FLOAT SWITCHES	24VDC	--	TRANSMITTER JUNCTION BOX	FLOAT SWITCH NO.1 & NO.2	--	MANUFACTURER'S CABLE IN 2-1/2"C
1100	120VAC FOR RECEPTACLE	-	--	LIGHTING PANEL	RECEPTACLE NEXT TO PUMP NO.1 J-BOX	--	2#12, #12G, 1" C.
1200	120VAC FOR RECEPTACLE	-	--	LIGHTING PANEL	RECEPTACLE NEXT TO PUMP NO.2 J-BOX	--	2#12, #12G, 1" C.
1300	SITE LIGHTING	120V	--	SITE LIGHTING	SITE LIGHTING SWITCH	--	2#12 AWG., #12 GND., 1"C.
1300A	SITE LIGHTING CONTROL	120V	--	LIGHTING PANEL	SITE LIGHTING SWITCH	--	2#12 AWG., #12 GND., 1"C.

NO.	DATE	REVISION	APP.

FOR INTERIM REVIEW
ONLY NOT INTENDED FOR
PERMIT, BIDDING OR
CONSTRUCTION PURPOSES.
ENGINEER:
HOSS FOROUZAN
P.E. SERIAL NO.77748
05/18/2026

GAI
Gupta & Associates, Inc.
CONSULTING ENGINEERING
Registration No. F-2593
302 Dennis St.,
Houston, Texas 77006
Tel: 713-636-2936
Fax: 713-636-2987
email: hforouzan@gaiconsulting.com

IDS Engineering Group
13430 NW. Freeway
Suite 700
Houston, Tx. 77040
713.462.3178
TxEng Firm 2726
TxSurv Firm 10110700

CITY OF HOUSTON
HOUSTON PUBLIC WORKS

LIFT STATION RENEWAL AND REPLACEMENT FY 2023

MUD NO.67 LIFT STATION CONDUIT SCHEDULE

WBS NUMBER	FOR CITY OF HOUSTON USE ONLY
R-000267-0179-4	
DRAWING SCALE	
HORIZ: NONE VERT: NONE	
CITY OF HOUSTON PM	
NAWARAJ PANTA, P.E.	
SHEET NO. 243 OF 361	

DWG. NO.
MUD-E-10

IDS JOB No. 0057-085-00

PLOTTED: 5/12/2026 8:29 PM
FILE PATH: O:\H8108_Lift Station Rehabilitation And Reconstruction (IDS)\6 Drawings\Electrical\Working\MUD #67\H8108_MUD-E-10.dwg

PLOTTED: 5/12/2026 8:58 PM

HMI

CONTROL PANEL PLC

CONTROL PANEL

INFLUENT PUMP NO. 1

SEAL FAIL ALARM MA 1

MOTOR OVERLOAD ALARM MO 1

MOTOR CURRENT II 1

HIGH TEMP ALARM TH 1

IN HAND HI 1

IN AUTO IA 1

ON/OFF YFS 1

START/ STOP YCS 1

INFLUENT PUMP NO. 2

SEAL FAIL ALARM MA 2

MOTOR OVERLOAD ALARM MO 2

MOTOR CURRENT II 2

HIGH TEMP ALARM TH 2

IN HAND HI 2

IN AUTO IA 2

ON/OFF YFS 2

START/ STOP YCS 2

ALARMS RESET RE 1

PRIMARY PLC

FLOAT HIGH-HIGH WETWELL LEVEL LAHH 1A

PUMP NO. 1 START/ STOP YCS 1A

PUMP NO. 2 START/ STOP YCS 2A

480V

INFLUENT PUMP NO. 1

H/O/A

RUN

INFLUENT PUMP NO. 2

H/O/A

RUN

PRIMARY PLC

BACKUP PLC

INFLUENT PUMP CONTROL PANEL

ALARMS RESET

OIT

TO SHEET MUD-I-2

MUD-I2

MUD-I2

WET WELL

LT 1

LE 1

LT 2

LE 2

LSH 1A

TSH 1A

M

FS2

HIGHHIGH LEVEL FLOAT SWITCH

LSH 2A

TSH 2A

M

INFLUENT DISCHARGE

FS1

HIGH LEVEL FLOAT SWITCH

NO.	DATE	REVISION	APP.

FOR INTERIM REVIEW
ONLY NOT INTENDED FOR
PERMIT, BIDDING OR
CONSTRUCTION PURPOSES.
ENGINEER:
HOSS FOROUZAN
P.E. SERIAL NO.77748
05/18/2026

GAI
Gupta & Associates, Inc
CONSULTING ENGINEERING
Registration No. F-2593

302 Dennis St.,
Houston, Texas 77006
Tel: 713-636-2936
Fax: 713-636-2987
email: hforouzan@gaiconsulting.com

IDS Engineering Group

13430 NW. Freeway
Suite 700
Houston, Tx. 77040
713.462.3178

TxEng Firm 2726
TxSurv Firm 10110700

CITY OF HOUSTON

HOUSTON PUBLIC WORKS

LIFT STATION RENEWAL AND REPLACEMENT FY 2023

MUD NO.67 LIFT STATION P&ID DIAGRAM–I

WBS NUMBER	FOR CITY OF HOUSTON USE ONLY
R–000267–0179–4	
DRAWING SCALE	
HORIZ: NONE VERT: NONE	
CITY OF HOUSTON PM	
NAWARAJ PANTA, P.E.	
SHEET NO. 244 OF 361	

DWG. NO.
MUD–I–01

IDS JOB No. 0057-085-00

FILE PATH: O:\H8108_Lift Station Rehabilitation And Reconstruction (IDS)\6 Drawings\Instrumentation And Control\Working\MUD #67\H8108_MUD–I–01.dwg

PLOTTED: 5/12/2026 8:58 PM

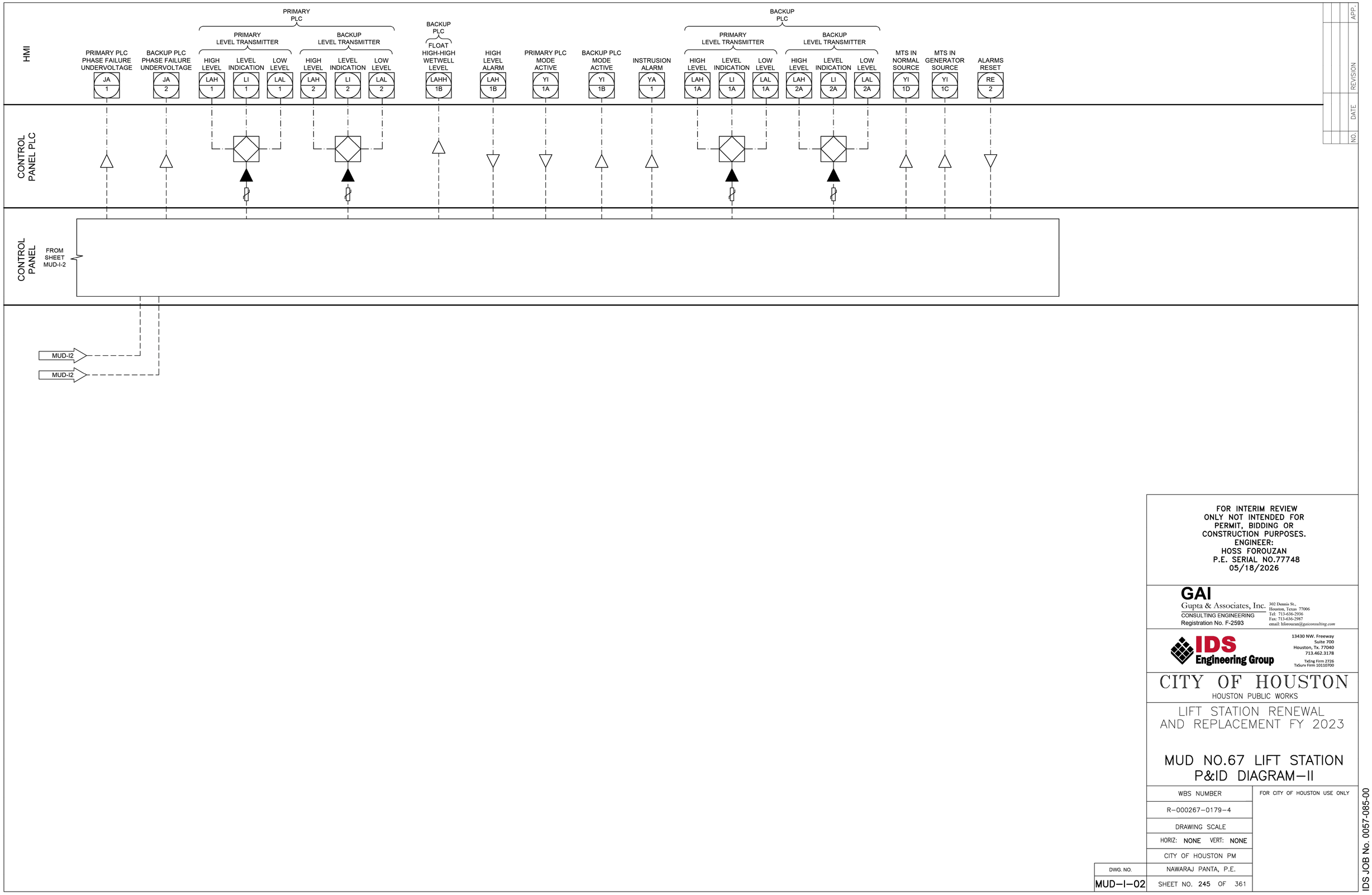

NO.	DATE	REVISION	APP.

FOR INTERIM REVIEW
ONLY NOT INTENDED FOR
PERMIT, BIDDING OR
CONSTRUCTION PURPOSES.
ENGINEER:
HOSS FOROUZAN
P.E. SERIAL NO.77748
05/18/2026

GAI
Gupta & Associates, Inc.
CONSULTING ENGINEERING
Registration No. F-2593
302 Dennis St.,
Houston, Texas 77006
Tel: 713-636-2936
Fax: 713-636-2987
email: hforouzan@gaiconsulting.com

IDS Engineering Group
13430 NW. Freeway
Suite 700
Houston, Tx. 77040
713.462.3178
TxEng Firm 2726
TxSurv Firm 10110700

CITY OF HOUSTON
HOUSTON PUBLIC WORKS

LIFT STATION RENEWAL
AND REPLACEMENT FY 2023

MUD NO.67 LIFT STATION P&ID DIAGRAM–II

WBS NUMBER	FOR CITY OF HOUSTON USE ONLY
R–000267–0179–4	
DRAWING SCALE	
HORIZ: NONE VERT: NONE	
CITY OF HOUSTON PM	
NAWARAJ PANTA, P.E.	
SHEET NO. 245 OF 361	

DWG. NO. MUD–I–02

IDS JOB No. 0057-085-00

FILE PATH: O:\H8108_Lift Station Rehabilitation And Reconstruction (IDS)\6 Drawings\Instrumentation And Control\1Working\MUD #67\H8108_MUD–I–02.dwg

PLOTTED: 5/12/2026 8:58 PM

FILE PATH: O:\H8108_Lift Station Rehabilitation And Reconstruction (IDS)\6 Drawings\Instrumentation And Control\Working\MUD #67\H8108_MUD-I-03.dwg

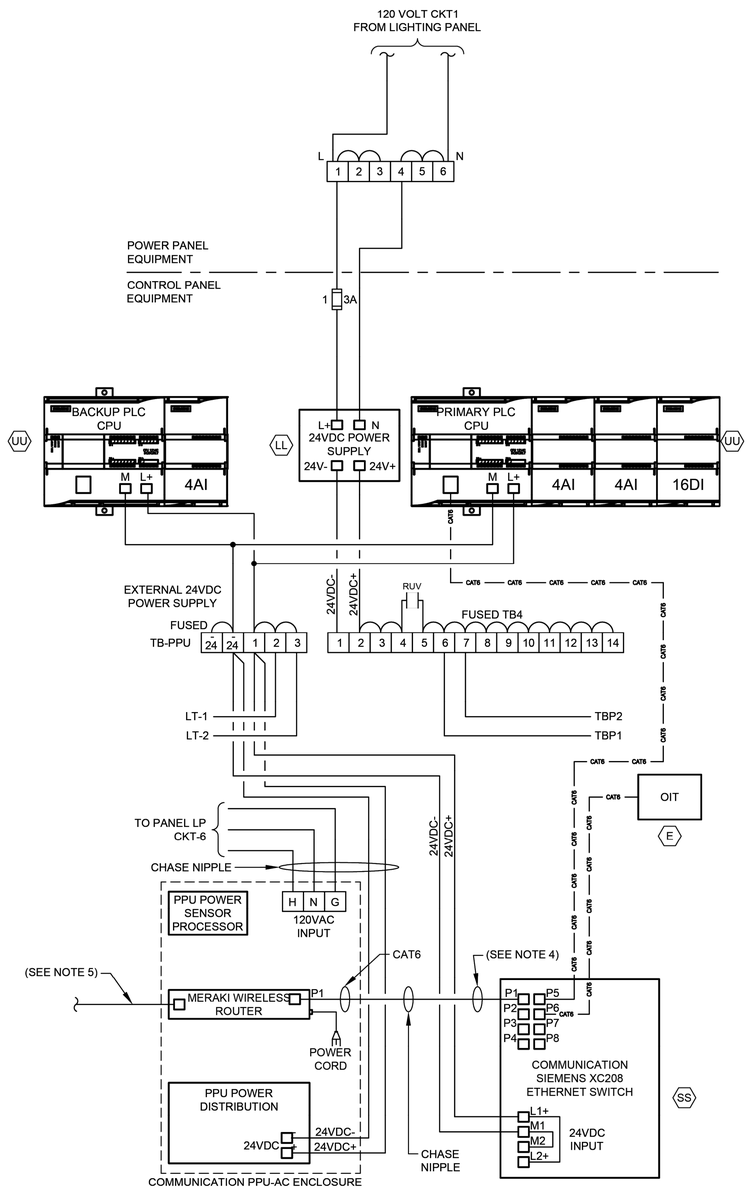

CONTROL POWER &
COMMUNICATIONS WIRING

DIAGRAM

NTS

(SEE NOTE 2 & 6)

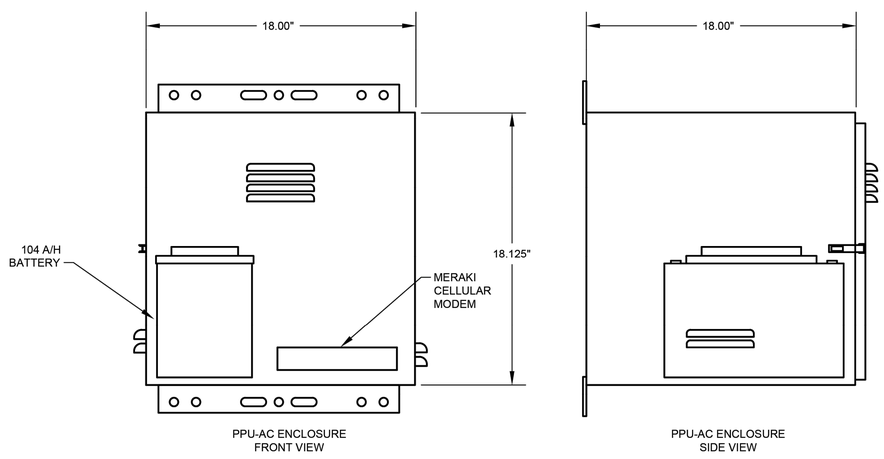

PPU-AC ENCLOSURE
FRONT VIEW

PPU-AC ENCLOSURE
SIDE VIEW

PPU-AC
CONTROL ENCLOSURE

ELEVATION

NTS

(SEE NOTE 7)

NOTES:

1. FOR DESCRIPTION AND RATINGS OF ITEMS INDICATED WITH ITEM TAG, SEE DEVICE RATINGS SCHEDULE.
2. REFER TO SPEC SECTION 16120 FOR CONDUCTOR COLOR CODE.
3. THE PLC POWER SUPPLY SHALL FEED THE 24VDC I/O.
4. CAT6 ETHERNET CABLE FOR MERAKI CELLULAR ROUTER (P1).
5. CAT6 POE CABLE TO RADIO.
6. COMMUNICATION PPU-AC & SCADA SHALL BE PROVIDED BY CONTRACTOR INCLUDING TO RUN CONDUITS & WIRES.
7. COORDINATE WITH VENDOR TO PROVIDE PROPER VENTILATION WHERE APPLICABLE.

GENERAL NOTES:

1. NO ELECTRICAL MATERIAL, APPARATUS, DEVICES, APPLIANCES, FIXTURES, OR EQUIPMENT SHALL BE SOLD OR INSTALLED IN THE CITY UNLESS THEY ARE IN CONFORMANCE WITH THE PROVISIONS OF SECTION 508 CITY OF HOUSTON ELECTRICAL CODE, THE LAWS OF THE STATE OF TEXAS AND ANY APPLICABLE RULES AND REGULATIONS ISSUED UNDER THE AUTHORITY OF THE STATE STATUES. THE MAKER'S NAME, TRADEMARK, OR OTHER IDENTIFICATION SYMBOL SHALL BE PLACED ON ALL ELECTRICAL MATERIALS, APPARATUS, DEVICES, APPLIANCES, FIXTURES, AND EQUIPMENT USED OR INSTALLED UNDER THE PROVISIONS OF THIS CODE. ALL ELECTRICAL MATERIALS AND EQUIPMENT SHALL BE LISTED AND LABELED FOR THE INTENDED USE AND SHALL BE INCLUDED IN A LIST PUBLISHED BY AN APPROVAL AGENCY.

NO.	DATE	REVISION	APP.

FOR INTERIM REVIEW
ONLY NOT INTENDED FOR
PERMIT, BIDDING OR
CONSTRUCTION PURPOSES.
ENGINEER:
HOSS FOROUZAN
P.E. SERIAL NO.77748
05/18/2026

GAI
Gupta & Associates, Inc.
CONSULTING ENGINEERING
Registration No. F-2593
302 Dennis St.,
Houston, Texas 77006
Tel: 713-636-2936
Fax: 713-636-2987
email: hforouzan@gaiconsulting.com

IDS Engineering Group
13430 NW. Freeway
Suite 700
Houston, Tx. 77040
713.462.3178
TxEng Firm 2726
TxSurv Firm 10110700

CITY OF HOUSTON
HOUSTON PUBLIC WORKS

LIFT STATION RENEWAL
AND REPLACEMENT FY 2023

MUD NO.67 LIFT STATION COMMUNICATION DIAGRAM

WBS NUMBER	FOR CITY OF HOUSTON USE ONLY
R-000267-0179-4	
DRAWING SCALE	
HORIZ: NTS VERT: NTS	
CITY OF HOUSTON PM	
NAWARAJ PANTA, P.E.	
SHEET NO. 246 OF 361	

DWG. NO. MUD-I-03

IDS JOB No. 0057-085-00

PLOTTED: 5/12/2026 8:58 PM

EQUIPMENT AND DEVICE SCHEDULE

ITEM	QUANTITY	DESCRIPTION
A	1	PANEL BOARD, 120/240V, 1 PHASE, 3 WIRE, 100A, 12 CKTS
B	2	FULL VOLTAGE, NON-REVERSING, SINGLE SPEED, AUTOMATIC MOTOR STARTER W/120 VOLT CONTROL COIL, NEMA SIZE AS SCHEDULED.
C	2	TIME DELAY RELAY WITH THREE FORM C CONTACTS, 120VAC COIL AND 11 PIN SOCKET BASE.
D	1	SINGLE CHANNEL INTRINSICALLY SAFE RELAY
E	1	PROGRAMMING SCREEN (OIT)
F	2	HAND-OFF-AUTO SWITCH, 3 POSITION, HEAVY-DUTY, OILTIGHT WITH 2 SETS OF CONTACT BLOCKS (PUMP CONTROL)
G	2	INDICATING LIGHT, HEAVY DUTY, OILTIGHT, RED, 24 VDC, LED, WITH "RUN" LEGEND
H	1	PERPETUAL POWER UNIT (PPU)
I	1	PUMP ALARM RESET PUSHBUTTON
J	2	SWITCH FOR CABINET LIGHT, 120V, 20A, SPST
K	3	DUPLEX RECEPTACLE, 120V, 20A, 2 WIRE, GROUNDED
L	2	24" LED STRIP LIGHT 120V SUITABLE FOR ZERO DEGREE OPERATION.
M	1	SURGE PROTECTOR - INCOMING POWER
N	*	NOT USED.
P	2	CURRENT TRANSFORMER, RATIO AS SCHEDULED W/4-20mA OUTPUT.
Q	12	TERMINAL BLOCKS, SIZED FOR MOTOR POWER REQUIREMENTS
R	*	RELAY WITH THREE FORM C CONTACTS, AND 11 PIN SOCKET BASE
S	*	NOT USED.
T	*	NAMEPLATES, SEE SPECIFICATIONS (SEE NAMEPLATE SCHEDULE)
U	2	SOLID STATE MOTOR OVERLOAD RELAY
V	6	FUSE HOLDER & FUSES - PHASE FAILURE
W	1	NEMA 3R GASKETED ALUMINUM ENCLOSURE WITHOUT VENTS 72"H x 48"w x 36"D
X	1	DOOR MOUNTED ROTARY HANDLE DISCONNECT SWITCH (SUITABLE FOR ENVIRONMENT)
Y	1	THERMAL-MAGNETIC MOLDED CASE MAIN CIRCUIT BREAKER, SIZE AS SCHEDULED
Z	2	ADJUSTABLE INSTANTENOUS TRIP MOTOR CIRCUIT PROTECTOR, SIZE AS SCHEDULED
AA	*	TERMINAL BLOCKS
BB	2	EXTERNAL OVERLOAD RESET PUSHBUTTON MECHANISM
CC	2	ANALOG I/O SURGE SUPPRESSOR
DD	1	WIRE DUCT 2" WIDE x 2" DEEP MINIMUM
EE	1	THERMAL-MAGNETIC MODLED CASE CIRCUIT BREAKER FOR LIGHTING TRANSFORMER, SIZE AS SCHEDULED
FF	1	GROUND BUS
GG	1	10 KVA, 480 - 240/120V,1ϕ, 3W DRY TYPE NEMA 3R ENCLOSURE TRANSFORMER
HH	*	NOT USED.
II	1	120VAC - 24VAC POWER SUPPLY (AS REQUIRED)
JJ	11	CARTRIDGE FUSES & FUSE HOLDER
KK	8	QUARTER TURN CAPTIVE DOOR CLOSURE
LL	1	120VAC - 24VDC PLC POWER SUPPLY 5A
MM	2	MOTION SWITCH
NN	*	NOT USED
PP	2	INDICATING LED LIGHT, HEAVY DUTY, OILTIGHT, GREEN, 24 VDC, LED WITH " PRIMARY PLC" & "BACKUP PLC" LEGEND
QQ	*	NOT USED
RR	*	NOT USED
SS	1	COMMUNICATION ETHERNET SWITCH
TT	1	POWER SURGE PROTECTOR - CONTROL POWER
UU	2	PROGRAMMABLE LOGIC CONTROLLER WITH EXPANSION UNIT
VV	1	PHASE AND UNDER VOLTAGE MONITOR
WW	*	FUSED TERMINAL BLOCKS
XX	2	PUMP PROTECTION MODULE RATED FOR CLASS I, DIVISION I
YY	2	ANALOG SIGNAL ISOLATOR
ZZ	-	NOT USED
AB	-	NOT USED.
AC	1	POWER DISTRIBUTION BLOCK
AD	1	NEUTRAL LUG
AE	1	6" EXHAUST FAN, 120V, STAINLESS FILTERS & GRILL PACKAGE W/BUG GUARD
AF	1	T-STAT FOR EXHAUST FAN

* - AS SCHEDULED

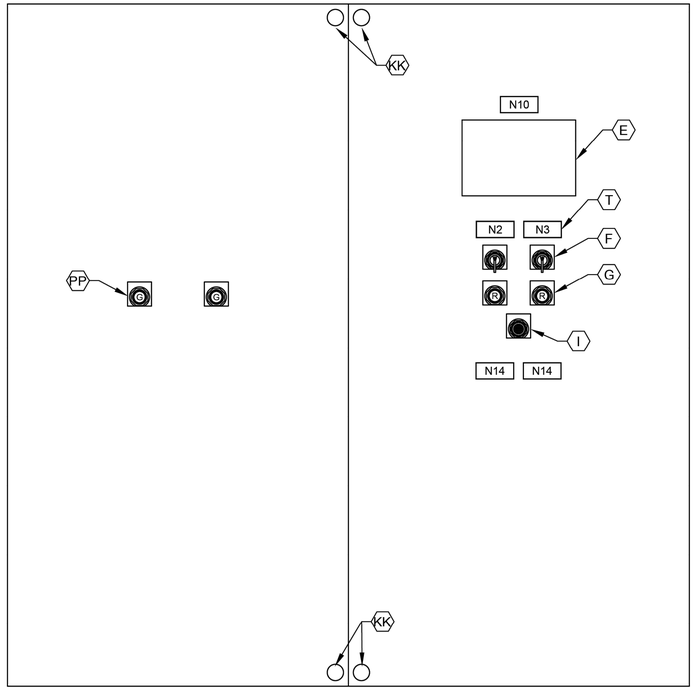

CONTROL PANEL FRONT INNER DOOR

ELEVATION

NTS

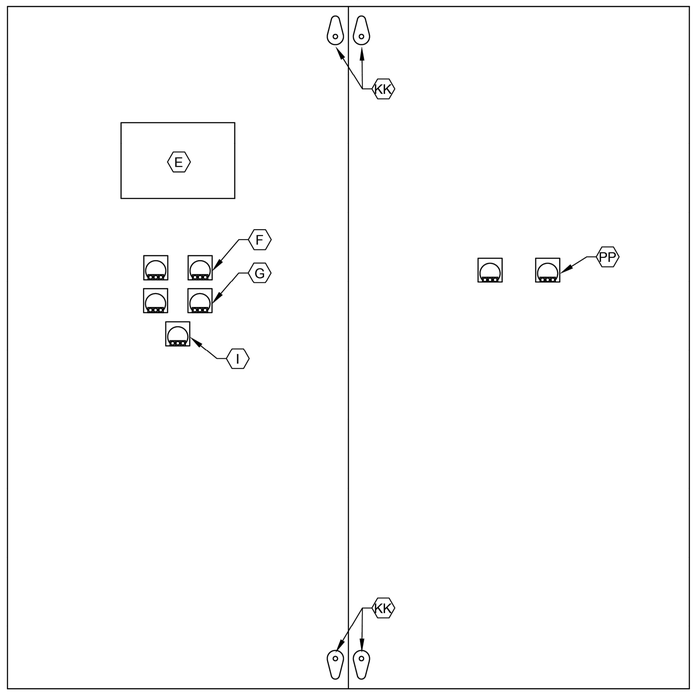

CONTROL PANEL BACK INNER DOOR

ELEVATION

NTS

NOTES:

1. NAMEPLATES SHALL BE MOUNTED TO PANELS USING STAINLESS STEEL HARDWARE.
2. REFER SPECIFICATIONS FOR ALL PANEL COMPONENTS.

GENERAL NOTES:

1. NO ELECTRICAL MATERIAL, APPARATUS, DEVICES, APPLIANCES, FIXTURES, OR EQUIPMENT SHALL BE SOLD OR INSTALLED IN THE CITY UNLESS THEY ARE IN CONFORMANCE WITH THE PROVISIONS OF SECTION 508 CITY OF HOUSTON ELECTRICAL CODE, THE LAWS OF THE STATE OF TEXAS AND ANY APPLICABLE RULES AND REGULATIONS ISSUED UNDER THE AUTHORITY OF THE STATE STATUES. THE MAKER'S NAME, TRADEMARK, OR OTHER IDENTIFICATION SYMBOL SHALL BE PLACED ON ALL ELECTRICAL MATERIALS, APPARATUS, DEVICES, APPLIANCES, FIXTURES, AND EQUIPMENT USED OR INSTALLED UNDER THE PROVISIONS OF THIS CODE. ALL ELECTRICAL MATERIALS AND EQUIPMENT SHALL BE LISTED AND LABELED FOR THE INTENDED USE AND SHALL BE INCLUDED IN A LIST PUBLISHED BY AN APPROVAL AGENCY.

NO.	DATE	REVISION	APP.

FOR INTERIM REVIEW
ONLY NOT INTENDED FOR
PERMIT, BIDDING OR
CONSTRUCTION PURPOSES.
ENGINEER:
HOSS FOROUZAN
P.E. SERIAL NO.77748
05/18/2026

GAI
Gupta & Associates, Inc.
CONSULTING ENGINEERING
Registration No. F-2593
302 Dennis St.,
Houston, Texas 77006
Tel: 713-636-2936
Fax: 713-636-2987
email: hforouzan@gaiconsulting.com

IDS Engineering Group
13430 NW. Freeway
Suite 700
Houston, Tx. 77040
713.462.3178
TxEng Firm 2726
TxSurv Firm 10110700

CITY OF HOUSTON

HOUSTON PUBLIC WORKS

LIFT STATION RENEWAL AND REPLACEMENT FY 2023

MUD NO.67 LIFT STATION CONTROL PANEL EQUIP. LAYOUT & SCHEDULE

WBS NUMBER	FOR CITY OF HOUSTON USE ONLY
R-000267-0179-4	
DRAWING SCALE	
HORIZ: NTS VERT: NTS	
CITY OF HOUSTON PM	
NAWARAJ PANTA, P.E.	
SHEET NO. 247 OF 361	

DWG. NO. MUD-I-04

IDS JOB No. 0057-085-00

FILE PATH: O:\H8108_Lift Station Rehabilitation And Reconstruction (IDS)\6 Drawings\Instrumentation And Control\Working\MUD #67\H8108_MUD-I-04.dwg

PLOTTED: 5/12/2026 8:58 PM

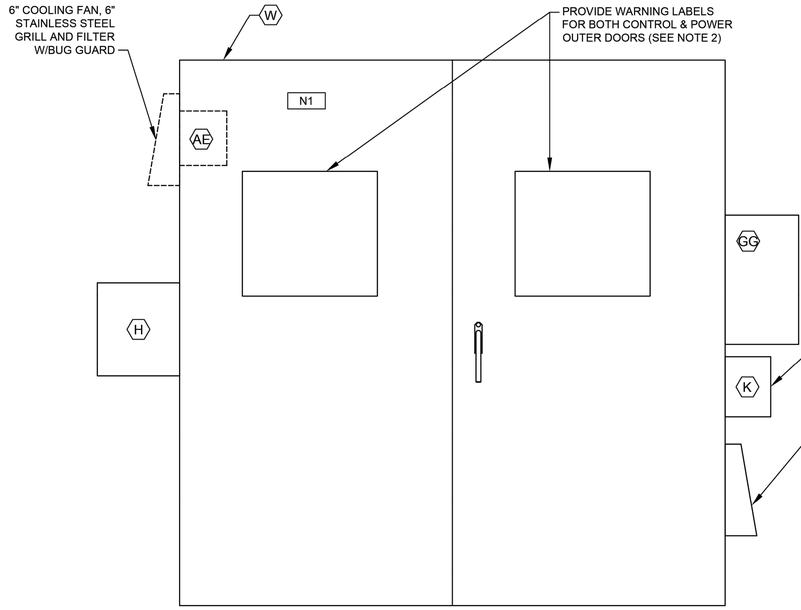

CONTROL CABINET (CONTROL SIDE)
OUTER DOOR

ELEVATION

NTS

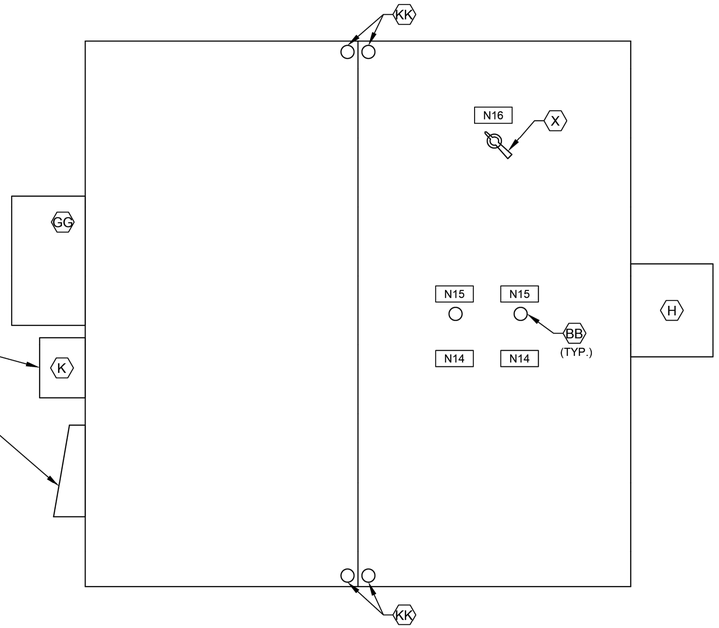

CONTROL CABINET (POWER SIDE)
INNER DOOR

ELEVATION

NTS
(SEE NOTE 1)

NOTES:

1. SEE SHEET MUD-I-4 FOR EQUIPMENT SCHEDULE.
2. REFER TO NEC SECTIONS 110.16 & 110.21

GENERAL NOTES:

1. NO ELECTRICAL MATERIAL, APPARATUS, DEVICES, APPLIANCES, FIXTURES, OR EQUIPMENT SHALL BE SOLD OR INSTALLED IN THE CITY UNLESS THEY ARE IN CONFORMANCE WITH THE PROVISIONS OF SECTION 508 CITY OF HOUSTON ELECTRICAL CODE, THE LAWS OF THE STATE OF TEXAS AND ANY APPLICABLE RULES AND REGULATIONS ISSUED UNDER THE AUTHORITY OF THE STATE STATUES. THE MAKER'S NAME, TRADEMARK, OR OTHER IDENTIFICATION SYMBOL SHALL BE PLACED ON ALL ELECTRICAL MATERIALS, APPARATUS, DEVICES, APPLIANCES, FIXTURES, AND EQUIPMENT USED OR INSTALLED UNDER THE PROVISIONS OF THIS CODE. ALL ELECTRICAL MATERIALS AND EQUIPMENT SHALL BE LISTED AND LABELED FOR THE INTENDED USE AND SHALL BE INCLUDED IN A LIST PUBLISHED BY AN APPROVAL AGENCY.

NAMEPLATE SCHEDULE

DESIGNATION	ENGRAVED	DESIGNATION	ENGRAVED
N1	PUMP STATION DESIGNATION	N8	NOT USED.
N2	PUMP NO. 1	N9	NOT USED.
N3	PUMP NO. 2	N10	PROGRAMMING SCREEN
N4	NOT USED.	N11	NOT USED.
N5	NOT USED.	N12	PRIMARY PLC
N6	NOT USED.	N13	BACKUP PLC
N7	NOT USED.	N14	MOTOR DATA HORSEPOWER (OUTPUT) ---------- RPM AT FULL LOAD ---------- TIME RATING ---------- FREQUENCY ---------- NUMBER OF PHASES ---------- MODEL NUMBER ---------- RATED VOLTAGE ---------- SERVICE FACTOR ---------- FULL LOAD AMPS ---------- INSULATION CLAS ---------- NEMA DESIGN LETTER ---------- TEMPERATURE RISE ---------- NEMA FRAME SIZE ---------- DATE OF MANUFACTURE ---------- THERMO PROTECTION (IF REQUIRED) -- MOISTURE PROTECTION (IF REQUIRED)-
		N15	EXTERNAL OVERLOAD RESET PUSH BUTTON MECHANISM
		N16	MAIN BREAKER

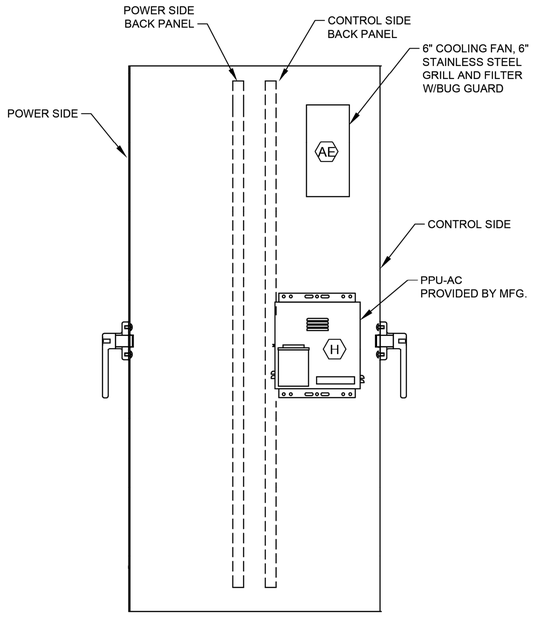

CONTROL CABINET (LEFT SIDE VIEW)

ELEVATION

NTS

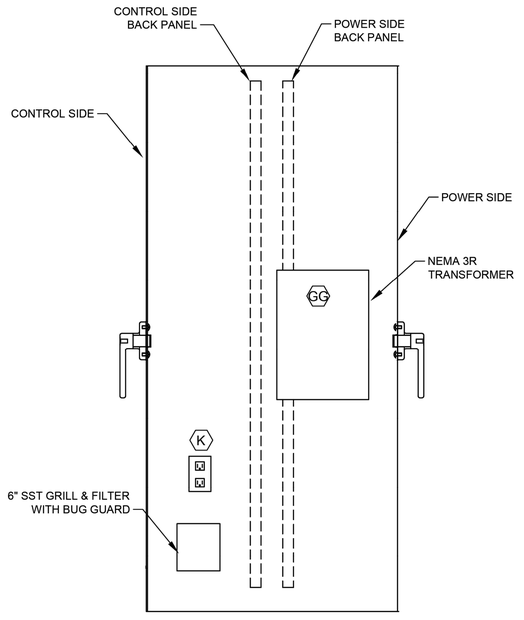

CONTROL CABINET (RIGHT SIDE VIEW)

ELEVATION

NTS

NO.	DATE	REVISION	APP.

FOR INTERIM REVIEW
ONLY NOT INTENDED FOR
PERMIT, BIDDING OR
CONSTRUCTION PURPOSES.
ENGINEER:
HOSS FOROUZAN
P.E. SERIAL NO.77748
05/18/2026

GAI
Gupta & Associates, Inc.
CONSULTING ENGINEERING
Registration No. F-2593
302 Dennis St.,
Houston, Texas 77006
Tel: 713-636-2936
Fax: 713-636-2987
email: hforouzan@gaiconsulting.com

IDS Engineering Group
13430 NW. Freeway
Suite 700
Houston, Tx. 77040
713.462.3178
TxEng Firm 2726
TxSurv Firm 10110700

CITY OF HOUSTON
HOUSTON PUBLIC WORKS

LIFT STATION RENEWAL
AND REPLACEMENT FY 2023

MUD NO.67 LIFT STATION CONTROL PANEL EQUIPMENT LAYOUT–I

WBS NUMBER	FOR CITY OF HOUSTON USE ONLY
R–000267–0179–4	
DRAWING SCALE	
HORIZ: NTS VERT: NTS	
CITY OF HOUSTON PM	
NAWARAJ PANTA, P.E.	
SHEET NO. 248 OF 361	

DWG. NO. MUD–I–05

IDS JOB No. 0057-085-00

FILE PATH: O:\H8108_Lift Station Rehabilitation And Reconstruction (IDS)\6 Drawings\Instrumentation And Control\Working\MUD #67\H8108_MUD–I–05.dwg

PLOTTED: 5/12/2026 8:58 PM

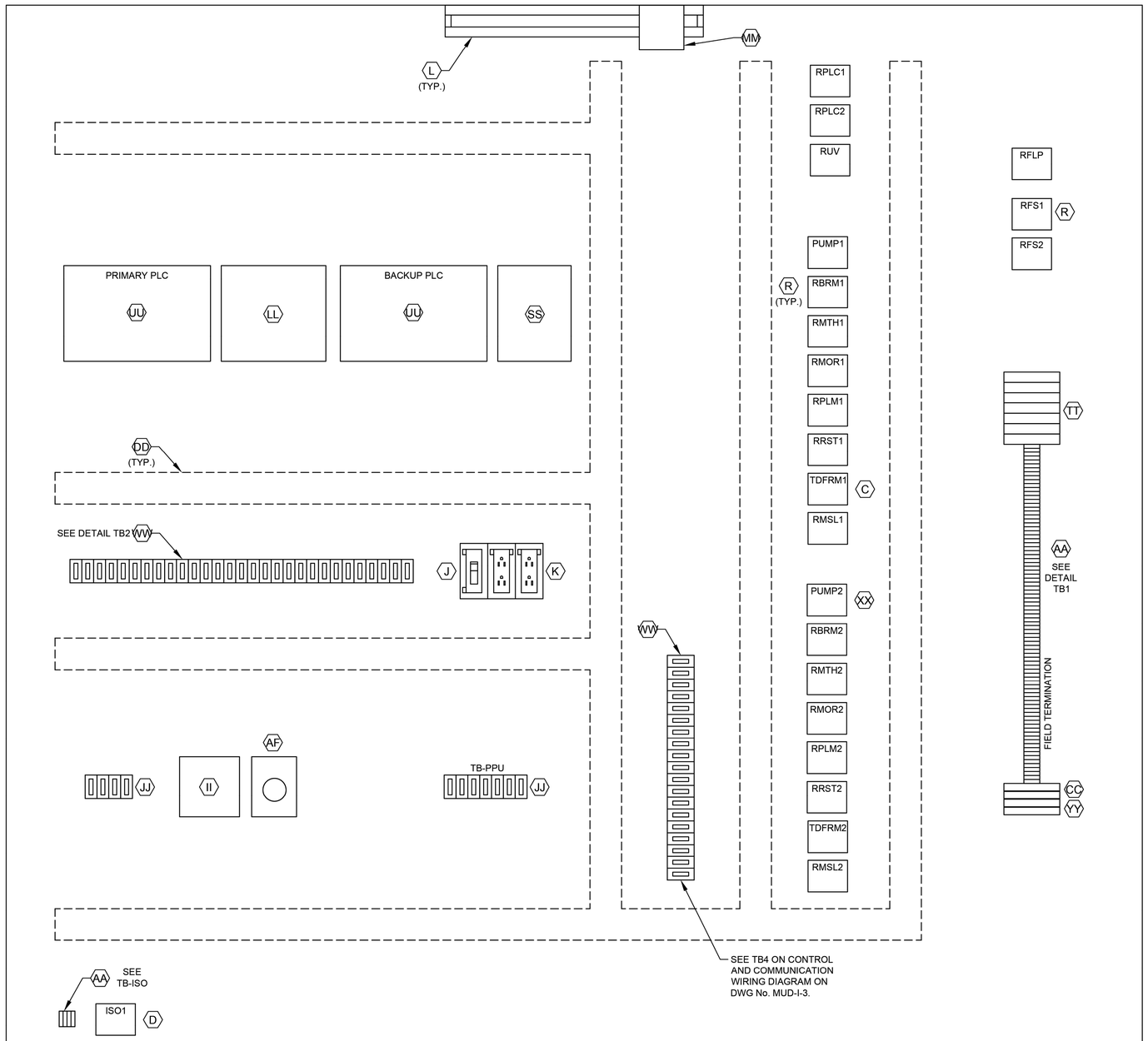

CONTROL PANEL ELEVATION

L1A
L1N
SPARE
3
3N
49
50
51
52
53
54
1004
1
24V-
24V-
1002
2
11
1001
1001A
12
1003
1003A
1002
1004
18
3N
19
20
36
36N
41
42
43
44
SPARE
L1A
L1N
103
104
105
106
107
108
110
113
115
116
119
SPARE
203
204
205
206
207
208
210
213
215
216
219

DETAIL TB1

ALL L AND N FOR EACH PUMP CONTROL TO BE FUSED

36A
37A
50
52
54
52A
54A
L+
M
35B
38B
41B
47B
13B
13AB
13GB
L+
M
14B
14AB
14GB
L+
M
13
13A
13G
14
14A
14G
SPARE
18
SPARE
28
29
32
35B
33
42
44
SPARE
103
104
115
109
110
118
120
121
122
123
SPARE
209
210
211
218
220
222
223

DETAIL TB2

1500
1501
1503
1504

DETAIL TB-ISO

LEGEND	
TAG	DESCRIPTION
RMTH	MOTOR HIGH TEMPERATURE ALARM RELAY
RPLM	PLC PUMP RUN RELAY
RRST	PUMP RESET AUX RELAY
RPLC	PLC MODE AUX RELAY
RMOR	MOTOR OVERLOAD ALARM RELAY
RBRM	BACKUP SYSTEM RUN RELAY
RUV	UNDER VOLTAGE RELAY
ISO	INTRINSICALLY SAFE RELAY
RFS	PUMP RUN FLOAT SWITCH RELAY
TDFRM	TIMER FLOAT SWITCH RUN RELAY
RMSL	MOTOR SEAL LEAK ALARM RELAY
RFLP	FLOAT LOCKOUT PUMP RELAY

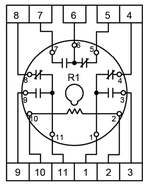

RELAY DETAIL ITEM R

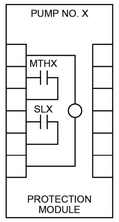

PUMP PROTECTION MODULE DETAIL, ITEM XX

NOTE: REPLACE "X" WITH APPROPRIATE PUMP NO.

NOTES:

1. SEE SHEET MUD-I-4 FOR EQUIPMENT SCHEDULE.

GENERAL NOTES:

1. NO ELECTRICAL MATERIAL, APPARATUS, DEVICES, APPLIANCES, FIXTURES, OR EQUIPMENT SHALL BE SOLD OR INSTALLED IN THE CITY UNLESS THEY ARE IN CONFORMANCE WITH THE PROVISIONS OF SECTION 508 CITY OF HOUSTON ELECTRICAL CODE, THE LAWS OF THE STATE OF TEXAS AND ANY APPLICABLE RULES AND REGULATIONS ISSUED UNDER THE AUTHORITY OF THE STATE STATUES. THE MAKER'S NAME, TRADEMARK, OR OTHER IDENTIFICATION SYMBOL SHALL BE PLACED ON ALL ELECTRICAL MATERIALS, APPARATUS, DEVICES, APPLIANCES, FIXTURES, AND EQUIPMENT USED OR INSTALLED UNDER THE PROVISIONS OF THIS CODE. ALL ELECTRICAL MATERIALS AND EQUIPMENT SHALL BE LISTED AND LABELED FOR THE INTENDED USE AND SHALL BE INCLUDED IN A LIST PUBLISHED BY AN APPROVAL AGENCY.

NO.	DATE	REVISION	APP.

FOR INTERIM REVIEW
ONLY NOT INTENDED FOR
PERMIT, BIDDING OR
CONSTRUCTION PURPOSES.
ENGINEER:
HOSS FOROUZAN
P.E. SERIAL NO.77748
05/18/2026

GAI
Gupta & Associates, Inc.
CONSULTING ENGINEERING
Registration No. F-2593
302 Dennis St.,
Houston, Texas 77006
Tel: 713-636-2936
Fax: 713-636-2987
email: hforouzan@gaiconsulting.com

IDS Engineering Group
13430 NW. Freeway
Suite 700
Houston, Tx. 77040
713.462.3178
TxEng Firm 2726
TxSurv Firm 10110700

CITY OF HOUSTON
HOUSTON PUBLIC WORKS

LIFT STATION RENEWAL AND REPLACEMENT FY 2023

MUD NO.67 LIFT STATION CONTROL PANEL EQUIPMENT LAYOUT–II

WBS NUMBER	FOR CITY OF HOUSTON USE ONLY
R–000267–0179–4	
DRAWING SCALE	
HORIZ: NONE VERT: NONE	
CITY OF HOUSTON PM	
NAWARAJ PANTA, P.E.	
SHEET NO. 249 OF 361	

DWG. NO. MUD–I–06

IDS JOB No. 0057-085-00

FILE PATH: O:\H8108_Lift Station Rehabilitation And Reconstruction (IDS)\6 Drawings\Instrumentation And Control\Working\MUD #67\H8108_MUD–I–06.dwg

PLOTTED: 5/12/2026 8:58 PM

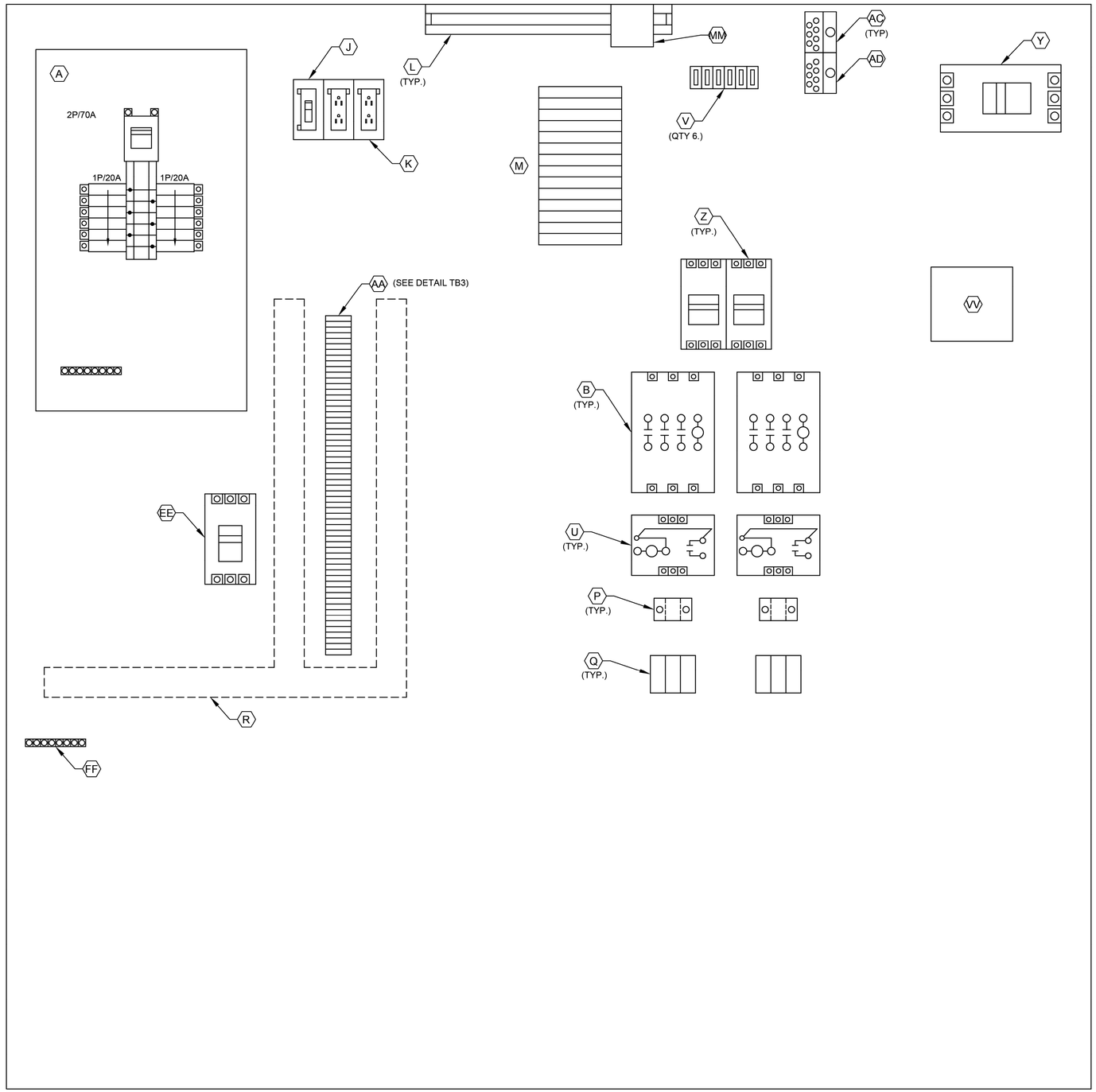

POWER PANEL
ELEVATION

3
18
L1A
L1N
SPARE
SPARE
103
104
105
106
107
108
110
113
115
116
119
SPARE
203
204
205
206
207
208
210
213
215
216
219
SPARE
SPARE
SPARE
SPARE
SPARE
SPARE
SPARE
SPARE
SPARE
SPARE

DETAIL TB3

NOTES:

1. SEE SHEET MUD-I-4 FOR EQUIPMENT SCHEDULE.

GENERAL NOTES:

1. NO ELECTRICAL MATERIAL, APPARATUS, DEVICES, APPLIANCES, FIXTURES, OR EQUIPMENT SHALL BE SOLD OR INSTALLED IN THE CITY UNLESS THEY ARE IN CONFORMANCE WITH THE PROVISIONS OF SECTION 508 CITY OF HOUSTON ELECTRICAL CODE, THE LAWS OF THE STATE OF TEXAS AND ANY APPLICABLE RULES AND REGULATIONS ISSUED UNDER THE AUTHORITY OF THE STATE STATUES. THE MAKER'S NAME, TRADEMARK, OR OTHER IDENTIFICATION SYMBOL SHALL BE PLACED ON ALL ELECTRICAL MATERIALS, APPARATUS, DEVICES, APPLIANCES, FIXTURES, AND EQUIPMENT USED OR INSTALLED UNDER THE PROVISIONS OF THIS CODE. ALL ELECTRICAL MATERIALS AND EQUIPMENT SHALL BE LISTED AND LABELED FOR THE INTENDED USE AND SHALL BE INCLUDED IN A LIST PUBLISHED BY AN APPROVAL AGENCY.

NO.	DATE	REVISION	APP.

FOR INTERIM REVIEW
ONLY NOT INTENDED FOR
PERMIT, BIDDING OR
CONSTRUCTION PURPOSES.
ENGINEER:
HOSS FOROUZAN
P.E. SERIAL NO.77748
05/18/2026

GAI
Gupta & Associates, Inc.
CONSULTING ENGINEERING
Registration No. F-2593
302 Dennie St.,
Houston, Texas 77006
Tel: 713-636-2936
Fax: 713-636-2987
email: hforouzan@gaiconsulting.com

IDS Engineering Group
13430 NW. Freeway
Suite 700
Houston, Tx. 77040
713.462.3178
TxEng Firm 2726
TxSurv Firm 10110700

CITY OF HOUSTON
HOUSTON PUBLIC WORKS

LIFT STATION RENEWAL AND REPLACEMENT FY 2023

MUD NO.67 LIFT STATION CONTROL PANEL EQUIPMENT LAYOUT–III

WBS NUMBER	FOR CITY OF HOUSTON USE ONLY
R–000267–0179–4	
DRAWING SCALE	
HORIZ: NONE VERT: NONE	
CITY OF HOUSTON PM	
NAWARAJ PANTA, P.E.	
SHEET NO. 250 OF 361	

DWG. NO.
MUD–I–07

IDS JOB No. 0057-085-00

FILE PATH: O:\H8108_Lift Station Rehabilitation And Reconstruction (IDS)\6 Drawings\Instrumentation And Control\Working\MUD #67\H8108_MUD–I–07.dwg

PLOTTED: 5/12/2026 8:58 PM

FILE PATH: O:\H8108_Lift Station Rehabilitation And Reconstruction (IDS)\6 Drawings\Instrumentation And Control\Working\MUD #67\H8108_MUD-I-08.dwg

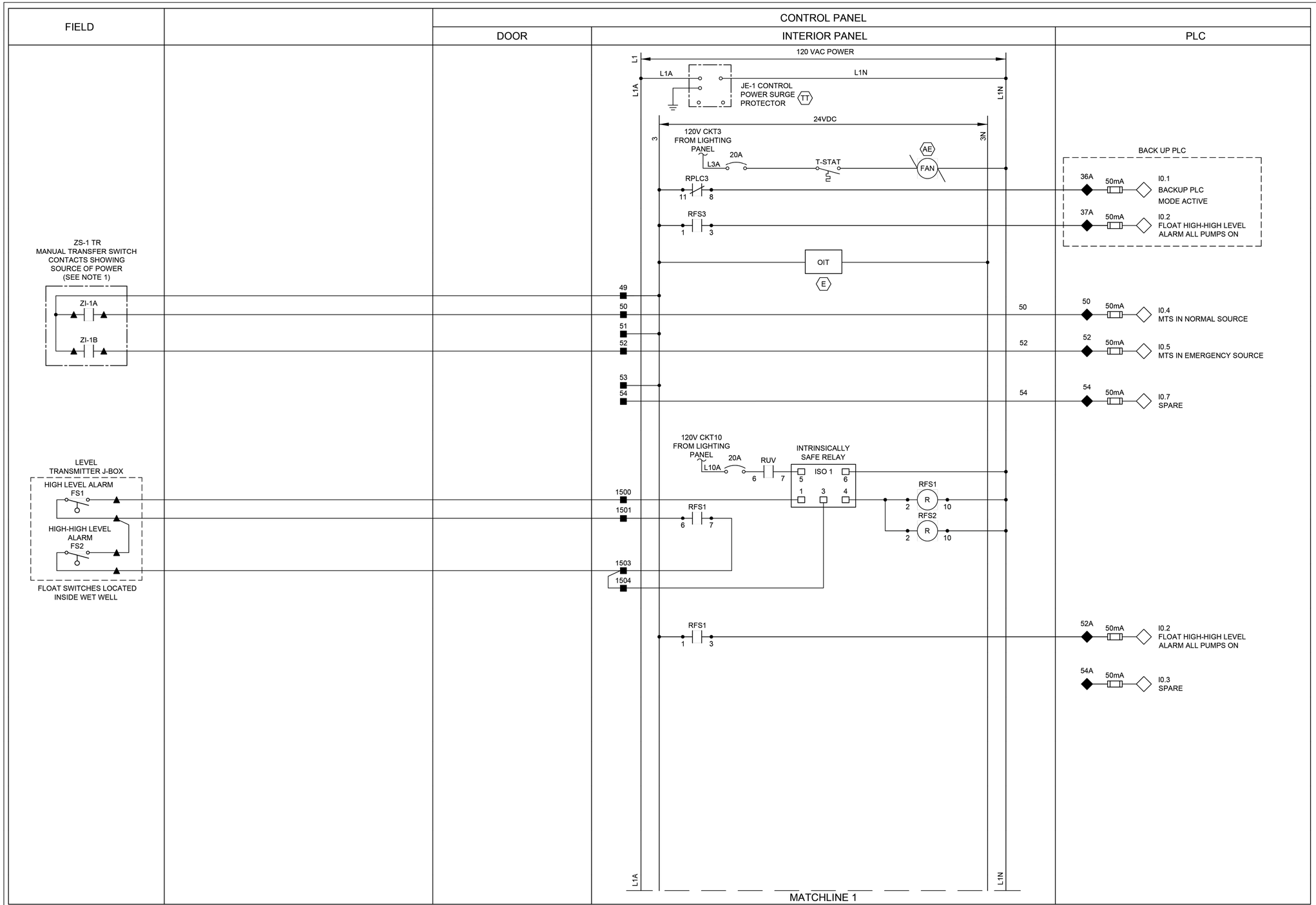

NOTES:

1. PROVIDE MANUAL TRANSFER SWITCH DRY CONTACT.
2. ALL FLOAT CONTROL CIRCUIT WIRES COLOR SHALL BE YELLOW.

GENERAL NOTES:

1. NO ELECTRICAL MATERIAL, APPARATUS, DEVICES, APPLIANCES, FIXTURES, OR EQUIPMENT SHALL BE SOLD OR INSTALLED IN THE CITY UNLESS THEY ARE IN CONFORMANCE WITH THE PROVISIONS OF SECTION 508 CITY OF HOUSTON ELECTRICAL CODE, THE LAWS OF THE STATE OF TEXAS AND ANY APPLICABLE RULES AND REGULATIONS ISSUED UNDER THE AUTHORITY OF THE STATE STATUES. THE MAKER'S NAME, TRADEMARK, OR OTHER IDENTIFICATION SYMBOL SHALL BE PLACED ON ALL ELECTRICAL MATERIALS, APPARATUS, DEVICES, APPLIANCES, FIXTURES, AND EQUIPMENT USED OR INSTALLED UNDER THE PROVISIONS OF THIS CODE. ALL ELECTRICAL MATERIALS AND EQUIPMENT SHALL BE LISTED AND LABELED FOR THE INTENDED USE AND SHALL BE INCLUDED IN A LIST PUBLISHED BY AN APPROVAL AGENCY.

LEGEND

- △ DEVICE OR FIELD TERMINAL LOCATED AT MOTOR
- ✳ DEVICE OR FIELD TERMINAL LOCATED REMOTE
- □ DEVICE OR FIELD TERMINAL LOCATED AT MCC/POWER PANEL
- ■ FIELD TERMINAL LOCATED AT CONTROL PANEL
- ▲ REMOTE TERMINAL
- ● DEVICE TERMINAL NO.
- ◆ PLC INTERFACE TERMINAL

NO.	DATE	REVISION	APP.

FOR INTERIM REVIEW
ONLY NOT INTENDED FOR
PERMIT, BIDDING OR
CONSTRUCTION PURPOSES.
ENGINEER:
HOSS FOROUZAN
P.E. SERIAL NO.77748
05/18/2026

GAI
Gupta & Associates, Inc.
CONSULTING ENGINEERING
Registration No. F-2593
302 Dennis St.,
Houston, Texas 77006
Tel: 713-636-2916
Fax: 713-636-2987
email: hforouzan@gaiconsulting.com

IDS Engineering Group
13430 NW. Freeway
Suite 700
Houston, Tx. 77040
713.462.3178
TxEng Firm 2726
TxSurv Firm 10110700

CITY OF HOUSTON
HOUSTON PUBLIC WORKS

LIFT STATION RENEWAL
AND REPLACEMENT FY 2023

MUD NO.67 LIFT STATION CONTROL PANEL CONTROL WIRING DIAGRAM-I

WBS NUMBER	FOR CITY OF HOUSTON USE ONLY
R-000267-0179-4	
DRAWING SCALE	
HORIZ: NONE VERT: NONE	
CITY OF HOUSTON PM	
NAWARAJ PANTA, P.E.	
SHEET NO. 251 OF 361	

DWG. NO. MUD-I-08

IDS JOB No. 0057-085-00

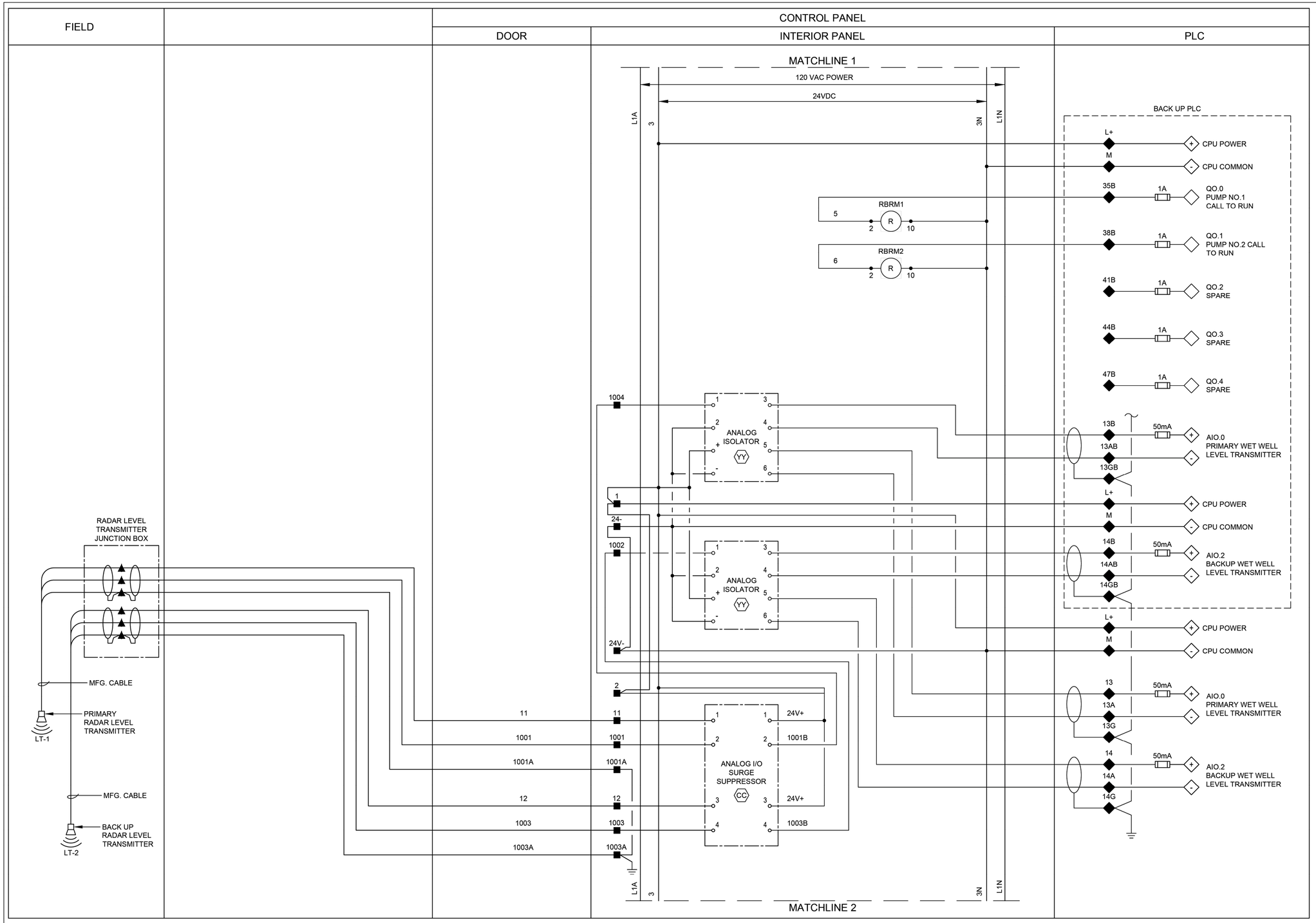

GENERAL NOTES:

1. NO ELECTRICAL MATERIAL, APPARATUS, DEVICES, APPLIANCES, FIXTURES, OR EQUIPMENT SHALL BE SOLD OR INSTALLED IN THE CITY UNLESS THEY ARE IN CONFORMANCE WITH THE PROVISIONS OF SECTION 508 CITY OF HOUSTON ELECTRICAL CODE, THE LAWS OF THE STATE OF TEXAS AND ANY APPLICABLE RULES AND REGULATIONS ISSUED UNDER THE AUTHORITY OF THE STATE STATUES. THE MAKER'S NAME, TRADEMARK, OR OTHER IDENTIFICATION SYMBOL SHALL BE PLACED ON ALL ELECTRICAL MATERIALS, APPARATUS, DEVICES, APPLIANCES, FIXTURES, AND EQUIPMENT USED OR INSTALLED UNDER THE PROVISIONS OF THIS CODE. ALL ELECTRICAL MATERIALS AND EQUIPMENT SHALL BE LISTED AND LABELED FOR THE INTENDED USE AND SHALL BE INCLUDED IN A LIST PUBLISHED BY AN APPROVAL AGENCY.

FOR INTERIM REVIEW
ONLY NOT INTENDED FOR
PERMIT, BIDDING OR
CONSTRUCTION PURPOSES.
ENGINEER:
HOSS FOROUZAN
P.E. SERIAL NO.77748
05/18/2026

GAI
Gupta & Associates, Inc.
CONSULTING ENGINEERING
Registration No. F-2593
302 Dennis St.,
Houston, Texas 77006
Tel: 713-636-2936
Fax: 713-636-2987
email: hforouzan@gaiconsulting.com

IDS Engineering Group
13430 NW. Freeway
Suite 700
Houston, Tx. 77040
713.462.3178
TxEng Firm 2726
TxSurv Firm 10110700

CITY OF HOUSTON
HOUSTON PUBLIC WORKS

LIFT STATION RENEWAL
AND REPLACEMENT FY 2023

MUD NO.67 LIFT STATION
CONTROL PANEL
CONTROL WIRING DIAGRAM–II

WBS NUMBER	FOR CITY OF HOUSTON USE ONLY
R–000267–0179–4	
DRAWING SCALE	
HORIZ: NONE VERT: NONE	
CITY OF HOUSTON PM	
NAWARAJ PANTA, P.E.	
SHEET NO. 252 OF 361	

DWG. NO.
MUD–I–09

LEGEND

- △ DEVICE OR FIELD TERMINAL LOCATED AT MOTOR
- ✳ DEVICE OR FIELD TERMINAL LOCATED REMOTE
- □ DEVICE OR FIELD TERMINAL LOCATED AT MCC/POWER PANEL
- ■ FIELD TERMINAL LOCATED AT CONTROL PANEL
- ▲ REMOTE TERMINAL
- ● DEVICE TERMINAL NO.
- ◆ PLC INTERFACE TERMINAL

NO.	DATE	REVISION	APP.

PLOTTED: 5/12/2026 8:58 PM

FILE PATH: O:\H8108_Lift Station Rehabilitation And Reconstruction (IDS)\6 Drawings\Instrumentation And Control\Working\MUD #67\H8108_MUD-I-09.dwg

IDS JOB No. 0057-085-00

PLOTTED: 5/12/2026 8:58 PM

FILE PATH: O:\H8108_Lift Station Rehabilitation And Reconstruction (IDS)\6 Drawings\Instrumentation And Control\Working\MUD #67\H8108_MUD-I-10.dwg

FIELD	POWER PANEL	CONTROL PANEL		
		DOOR	INTERIOR PANEL	PLC

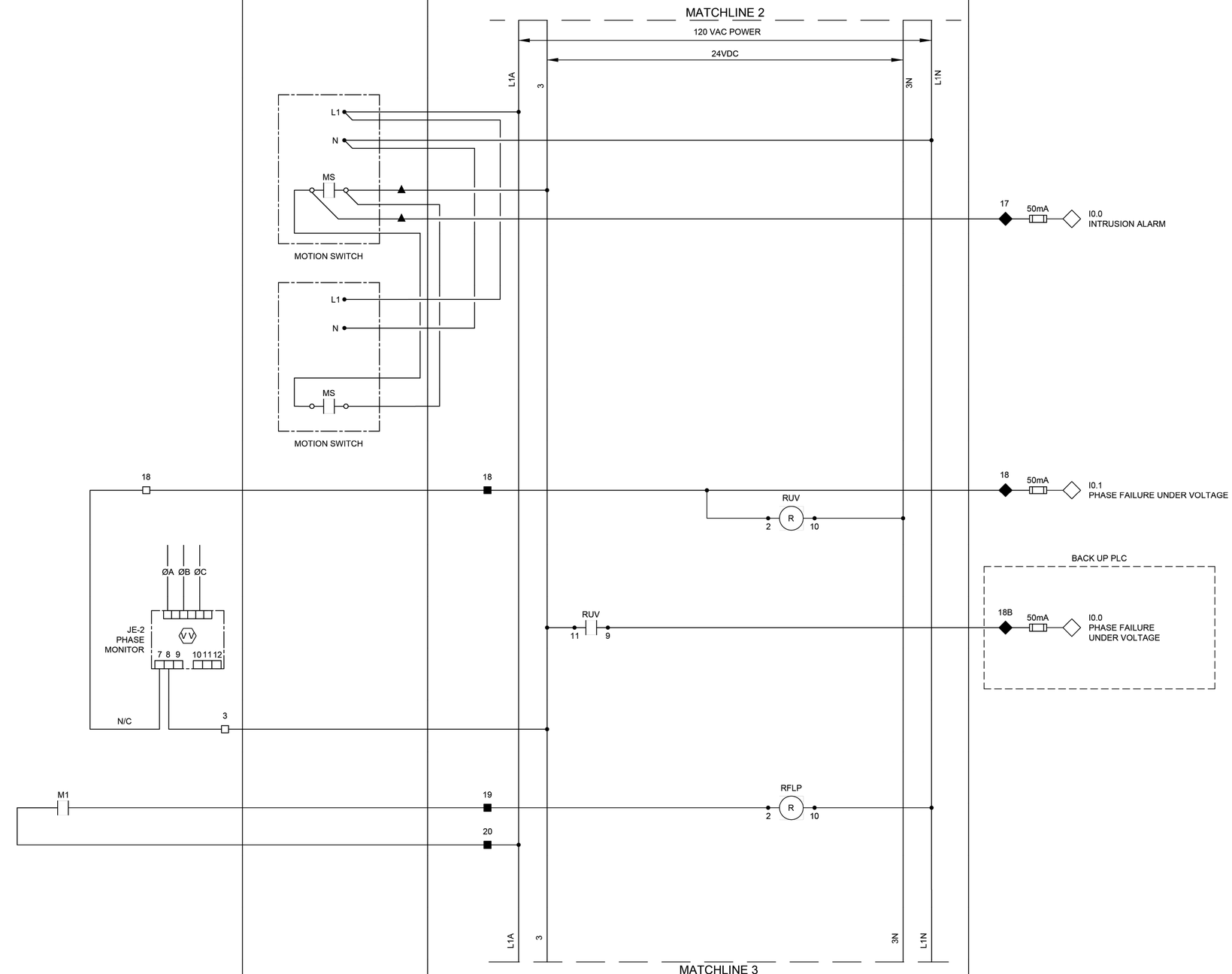

NO.	DATE	REVISION	APP.

GENERAL NOTES:

1. NO ELECTRICAL MATERIAL, APPARATUS, DEVICES, APPLIANCES, FIXTURES, OR EQUIPMENT SHALL BE SOLD OR INSTALLED IN THE CITY UNLESS THEY ARE IN CONFORMANCE WITH THE PROVISIONS OF SECTION 508 CITY OF HOUSTON ELECTRICAL CODE, THE LAWS OF THE STATE OF TEXAS AND ANY APPLICABLE RULES AND REGULATIONS ISSUED UNDER THE AUTHORITY OF THE STATE STATUES. THE MAKER'S NAME, TRADEMARK, OR OTHER IDENTIFICATION SYMBOL SHALL BE PLACED ON ALL ELECTRICAL MATERIALS, APPARATUS, DEVICES, APPLIANCES, FIXTURES, AND EQUIPMENT USED OR INSTALLED UNDER THE PROVISIONS OF THIS CODE. ALL ELECTRICAL MATERIALS AND EQUIPMENT SHALL BE LISTED AND LABELED FOR THE INTENDED USE AND SHALL BE INCLUDED IN A LIST PUBLISHED BY AN APPROVAL AGENCY.

FOR INTERIM REVIEW
ONLY NOT INTENDED FOR
PERMIT, BIDDING OR
CONSTRUCTION PURPOSES.
ENGINEER:
HOSS FOROUZAN
P.E. SERIAL NO.77748
05/18/2026

GAI
Gupta & Associates, Inc.
CONSULTING ENGINEERING
Registration No. F-2593
302 Dennis St.,
Houston, Texas 77006
Tel: 713-636-2936
Fax: 713-636-2987
email: hforouzan@gaiconsulting.com

IDS Engineering Group
13430 NW. Freeway
Suite 700
Houston, Tx. 77040
713.462.3178
TxEng Firm 2726
TxSurv Firm 10110700

CITY OF HOUSTON
HOUSTON PUBLIC WORKS

LIFT STATION RENEWAL
AND REPLACEMENT FY 2023

MUD NO.67 LIFT STATION CONTROL PANEL CONTROL WIRING DIAGRAM–III

WBS NUMBER	FOR CITY OF HOUSTON USE ONLY
R–000267–0179–4	
DRAWING SCALE	
HORIZ: NONE VERT: NONE	
CITY OF HOUSTON PM	
NAWARAJ PANTA, P.E.	
SHEET NO. 253 OF 361	

DWG. NO.
MUD–I–10

LEGEND

- △ DEVICE OR FIELD TERMINAL LOCATED AT MOTOR
- ✳ DEVICE OR FIELD TERMINAL LOCATED REMOTE
- □ DEVICE OR FIELD TERMINAL LOCATED AT MCC/POWER PANEL
- ■ FIELD TERMINAL LOCATED AT CONTROL PANEL
- ▲ REMOTE TERMINAL
- ● DEVICE TERMINAL NO.
- ◆ PLC INTERFACE TERMINAL

IDS JOB No. 0057-085-00

PLOTTED: 5/12/2026 8:58 PM

FILE PATH: O:\H8108_Lift Station Rehabilitation And Reconstruction (IDS)\6 Drawings\Instrumentation And Control\Working\MUD #67\H8108_MUD-I-11.dwg

FIELD	POWER PANEL	CONTROL PANEL		
		DOOR	INTERIOR PANEL	PLC

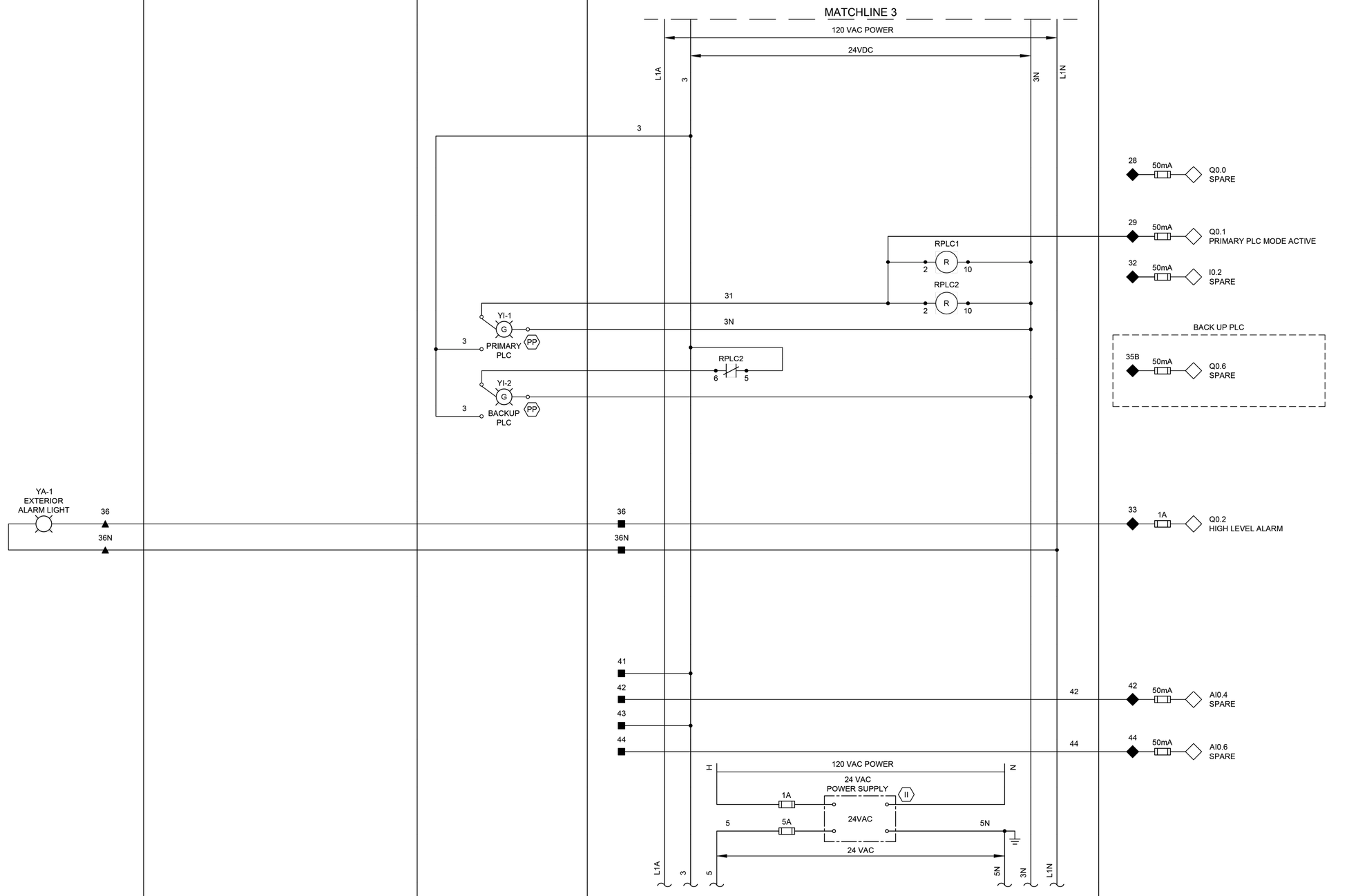

LEGEND

- △ DEVICE OR FIELD TERMINAL LOCATED AT MOTOR
- ✳ DEVICE OR FIELD TERMINAL LOCATED REMOTE
- □ DEVICE OR FIELD TERMINAL LOCATED AT MCC/POWER PANEL
- ■ FIELD TERMINAL LOCATED AT CONTROL PANEL
- ▲ REMOTE TERMINAL
- ● DEVICE TERMINAL NO.
- ◆ PLC INTERFACE TERMINAL

GENERAL NOTES:

1. NO ELECTRICAL MATERIAL, APPARATUS, DEVICES, APPLIANCES, FIXTURES, OR EQUIPMENT SHALL BE SOLD OR INSTALLED IN THE CITY UNLESS THEY ARE IN CONFORMANCE WITH THE PROVISIONS OF SECTION 508 CITY OF HOUSTON ELECTRICAL CODE, THE LAWS OF THE STATE OF TEXAS AND ANY APPLICABLE RULES AND REGULATIONS ISSUED UNDER THE AUTHORITY OF THE STATE STATUES. THE MAKER'S NAME, TRADEMARK, OR OTHER IDENTIFICATION SYMBOL SHALL BE PLACED ON ALL ELECTRICAL MATERIALS, APPARATUS, DEVICES, APPLIANCES, FIXTURES, AND EQUIPMENT USED OR INSTALLED UNDER THE PROVISIONS OF THIS CODE. ALL ELECTRICAL MATERIALS AND EQUIPMENT SHALL BE LISTED AND LABELED FOR THE INTENDED USE AND SHALL BE INCLUDED IN A LIST PUBLISHED BY AN APPROVAL AGENCY.

NO.	DATE	REVISION	APP.

FOR INTERIM REVIEW
ONLY NOT INTENDED FOR
PERMIT, BIDDING OR
CONSTRUCTION PURPOSES.
ENGINEER:
HOSS FOROUZAN
P.E. SERIAL NO.77748
05/18/2026

GAI
Gupta & Associates, Inc.
CONSULTING ENGINEERING
Registration No. F-2593
302 Dennis St.,
Houston, Texas 77006
Tel: 713-636-2936
Fax: 713-636-2987
email: hforouzan@gaiconsulting.com

IDS Engineering Group
13430 NW. Freeway
Suite 700
Houston, Tx. 77040
713.462.3178
TxEng Firm 2726
TxSurv Firm 10110700

CITY OF HOUSTON
HOUSTON PUBLIC WORKS

LIFT STATION RENEWAL
AND REPLACEMENT FY 2023

MUD NO.67 LIFT STATION CONTROL PANEL CONTROL WIRING DIAGRAM–IV

WBS NUMBER	FOR CITY OF HOUSTON USE ONLY
R–000267–0179–4	
DRAWING SCALE	
HORIZ: NONE VERT: NONE	
CITY OF HOUSTON PM	
NAWARAJ PANTA, P.E.	
DWG. NO. MUD–I–11	SHEET NO. 254 OF 361

IDS JOB No. 0057-085-00

PLOTTED: 5/12/2026 8:58 PM

FILE PATH: O:\H8108_Lift Station Rehabilitation And Reconstruction (IDS)\6 Drawings\Instrumentation And Control\Working\MUD #67\H8108_MUD-I-12.dwg

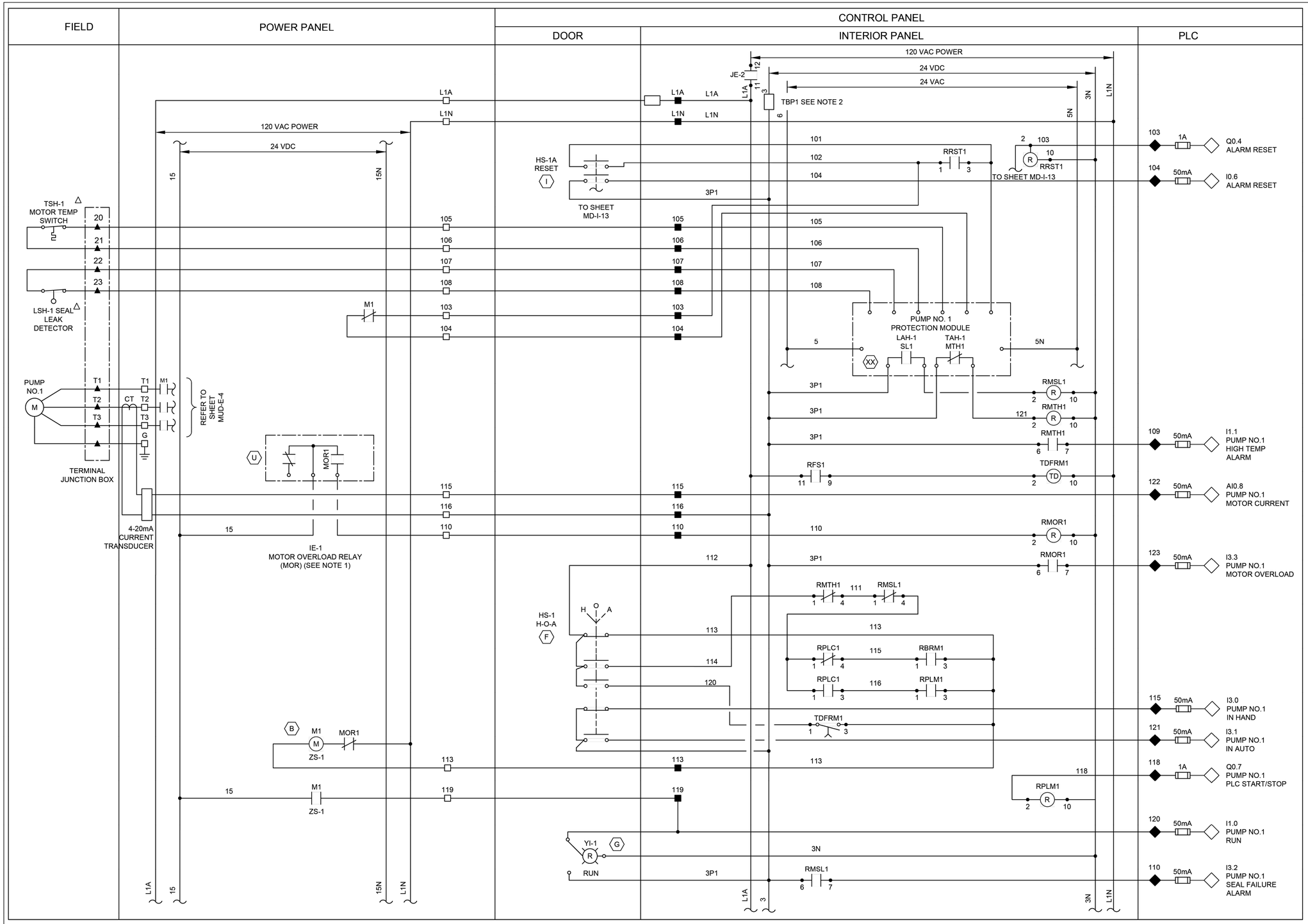

LEGEND

- △ DEVICE OR FIELD TERMINAL LOCATED AT MOTOR
- ✳ DEVICE OR FIELD TERMINAL LOCATED REMOTE
- □ DEVICE OR FIELD TERMINAL LOCATED AT MCC/POWER PANEL
- ■ FIELD TERMINAL LOCATED AT CONTROL PANEL
- ▲ REMOTE TERMINAL
- ● DEVICE TERMINAL NO.
- ◆ PLC INTERFACE TERMINAL

NOTES:

1. MOTOR OVERLOAD RELAY OUTPUT CONTACT SHOWN NORMALLY CLOSED WHEN RELAY IS DE-ENERGIZED, OPEN WHEN ENERGIZED, AND CLOSED WHEN IN ALARM. VERIFY OPERATION OF RELAY PROVIDED AND ADJUST CONNECTION OF RMOR AUXILIARY RELAYS.
2. FUSED TERMINAL ON TERMINAL BLOCK TB4 SEE CONTROL POWER AND COMMUNICATION WIRING DIAGRAM DRAWING NO. MUD-I-3.
3. ALL FLOAT CONTROL CIRCUIT WIRES COLOR SHALL BE YELLOW.

GENERAL NOTES:

1. NO ELECTRICAL MATERIAL, APPARATUS, DEVICES, APPLIANCES, FIXTURES, OR EQUIPMENT SHALL BE SOLD OR INSTALLED IN THE CITY UNLESS THEY ARE IN CONFORMANCE WITH THE PROVISIONS OF SECTION 508 CITY OF HOUSTON ELECTRICAL CODE, THE LAWS OF THE STATE OF TEXAS AND ANY APPLICABLE RULES AND REGULATIONS ISSUED UNDER THE AUTHORITY OF THE STATE STATUES. THE MAKER'S NAME, TRADEMARK, OR OTHER IDENTIFICATION SYMBOL SHALL BE PLACED ON ALL ELECTRICAL MATERIALS, APPARATUS, DEVICES, APPLIANCES, FIXTURES, AND EQUIPMENT USED OR INSTALLED UNDER THE PROVISIONS OF THIS CODE. ALL ELECTRICAL MATERIALS AND EQUIPMENT SHALL BE LISTED AND LABELED FOR THE INTENDED USE AND SHALL BE INCLUDED IN A LIST PUBLISHED BY AN APPROVAL AGENCY.

NO.	DATE	REVISION	APP.

FOR INTERIM REVIEW
ONLY NOT INTENDED FOR
PERMIT, BIDDING OR
CONSTRUCTION PURPOSES.
ENGINEER:
HOSS FOROUZAN
P.E. SERIAL NO.77748
05/18/2026

GAI
Gupta & Associates, Inc.
CONSULTING ENGINEERING
Registration No. F-2593
302 Dennis St.,
Houston, Texas 77006
Tel: 713-636-2936
Fax: 713-636-2987
email: hforouzan@gaiconsulting.com

IDS Engineering Group
13430 NW. Freeway
Suite 700
Houston, Tx. 77040
713.462.3178
TxEng Firm 2726
TxSurv Firm 10110700

CITY OF HOUSTON
HOUSTON PUBLIC WORKS

LIFT STATION RENEWAL AND REPLACEMENT FY 2023

MUD NO.67 LIFT STATION PUMP NO.1 CONTROL WIRING DIAGRAM

WBS NUMBER	FOR CITY OF HOUSTON USE ONLY
R-000267-0179-4	
DRAWING SCALE	
HORIZ: NONE VERT: NONE	
CITY OF HOUSTON PM	
NAWARAJ PANTA, P.E.	
DWG. NO. MUD-I-12	SHEET NO. 255 OF 361

IDS JOB No. 0057-085-00

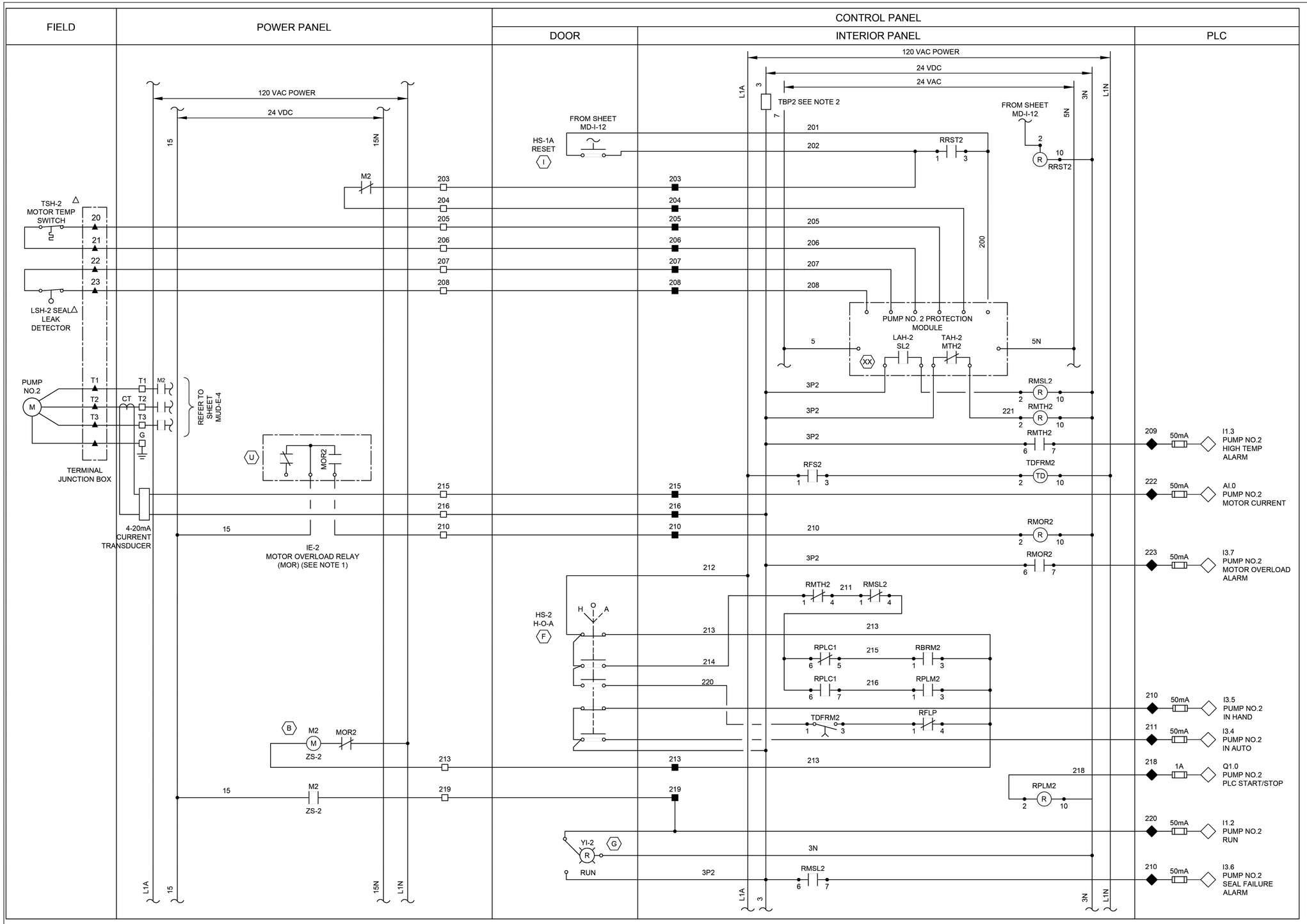

NOTES:

1. MOTOR OVERLOAD RELAY OUTPUT CONTACT SHOWN NORMALLY CLOSED WHEN RELAY IS DE-ENERGIZED, OPEN WHEN ENERGIZED, AND CLOSED WHEN IN ALARM. VERIFY OPERATION OF RELAY PROVIDED AND ADJUST CONNECTION OF RMOR AUXILIARY RELAYS.
2. FUSED TERMINAL ON TERMINAL BLOCK TB4 SEE CONTROL POWER AND COMMUNICATION WIRING DIAGRAM DRAWING NO. MUD-I-3.
3. ALL FLOAT CONTROL CIRCUIT WIRES COLOR SHALL BE YELLOW.

GENERAL NOTES:

1. NO ELECTRICAL MATERIAL, APPARATUS, DEVICES, APPLIANCES, FIXTURES, OR EQUIPMENT SHALL BE SOLD OR INSTALLED IN THE CITY UNLESS THEY ARE IN CONFORMANCE WITH THE PROVISIONS OF SECTION 508 CITY OF HOUSTON ELECTRICAL CODE, THE LAWS OF THE STATE OF TEXAS AND ANY APPLICABLE RULES AND REGULATIONS ISSUED UNDER THE AUTHORITY OF THE STATE STATUES. THE MAKER'S NAME, TRADEMARK, OR OTHER IDENTIFICATION SYMBOL SHALL BE PLACED ON ALL ELECTRICAL MATERIALS, APPARATUS, DEVICES, APPLIANCES, FIXTURES, AND EQUIPMENT USED OR INSTALLED UNDER THE PROVISIONS OF THIS CODE. ALL ELECTRICAL MATERIALS AND EQUIPMENT SHALL BE LISTED AND LABELED FOR THE INTENDED USE AND SHALL BE INCLUDED IN A LIST PUBLISHED BY AN APPROVAL AGENCY.

FOR INTERIM REVIEW ONLY NOT INTENDED FOR PERMIT, BIDDING OR CONSTRUCTION PURPOSES.
ENGINEER:
HOSS FOROUZAN
P.E. SERIAL NO.77748
05/18/2026

GAI
Gupta & Associates, Inc.
CONSULTING ENGINEERING
Registration No. F-2593
302 Dennis St., Houston, Texas 77006
Tel: 713-636-2936
Fax: 713-636-2987
email: hforouzan@gaiconsulting.com

IDS Engineering Group
13430 NW. Freeway
Suite 700
Houston, Tx. 77040
713.462.3178
TxEng Firm 2726
TxSurv Firm 10110700

CITY OF HOUSTON
HOUSTON PUBLIC WORKS

LIFT STATION RENEWAL AND REPLACEMENT FY 2023

MUD NO.67 LIFT STATION PUMP NO.2 CONTROL WIRING DIAGRAM

WBS NUMBER	FOR CITY OF HOUSTON USE ONLY
R-000267-0179-4	
DRAWING SCALE	
HORIZ: NONE VERT: NONE	
CITY OF HOUSTON PM	
NAWARAJ PANTA, P.E.	
SHEET NO. 256 OF 361	

DWG. NO. MUD-I-13

LEGEND

- △ DEVICE OR FIELD TERMINAL LOCATED AT MOTOR
- ✳ DEVICE OR FIELD TERMINAL LOCATED REMOTE
- □ DEVICE OR FIELD TERMINAL LOCATED AT MCC/POWER PANEL
- ■ FIELD TERMINAL LOCATED AT CONTROL PANEL
- ▲ REMOTE TERMINAL
- ● DEVICE TERMINAL NO.
- ◆ PLC INTERFACE TERMINAL

NO.	DATE	REVISION	APP.

PLOTTED: 5/12/2026 8:58 PM

FILE PATH: O:\H8108_Lift Station Rehabilitation And Reconstruction (IDS)\6 Drawings\Instrumentation And Control\Working\MUD #67\H8108_MUD-I-13.dwg

IDS JOB No. 0057-085-00

PLOTTED: 5/13/2026 6:44 PM

FILE PATH: \\idseg.com\FS\Projects\0000\005708500 CoH Lift Stations - FY 2023\CAD\DWG\PRODUCTION\257-WOODFOREST OVERALL SITE PLAN.dwg

LEGEND

- EXISTING CONCRETE PAVEMENT
- EXISTING CONCRETE SIDEWALK
- LIDAR CONTOUR DATED 2018

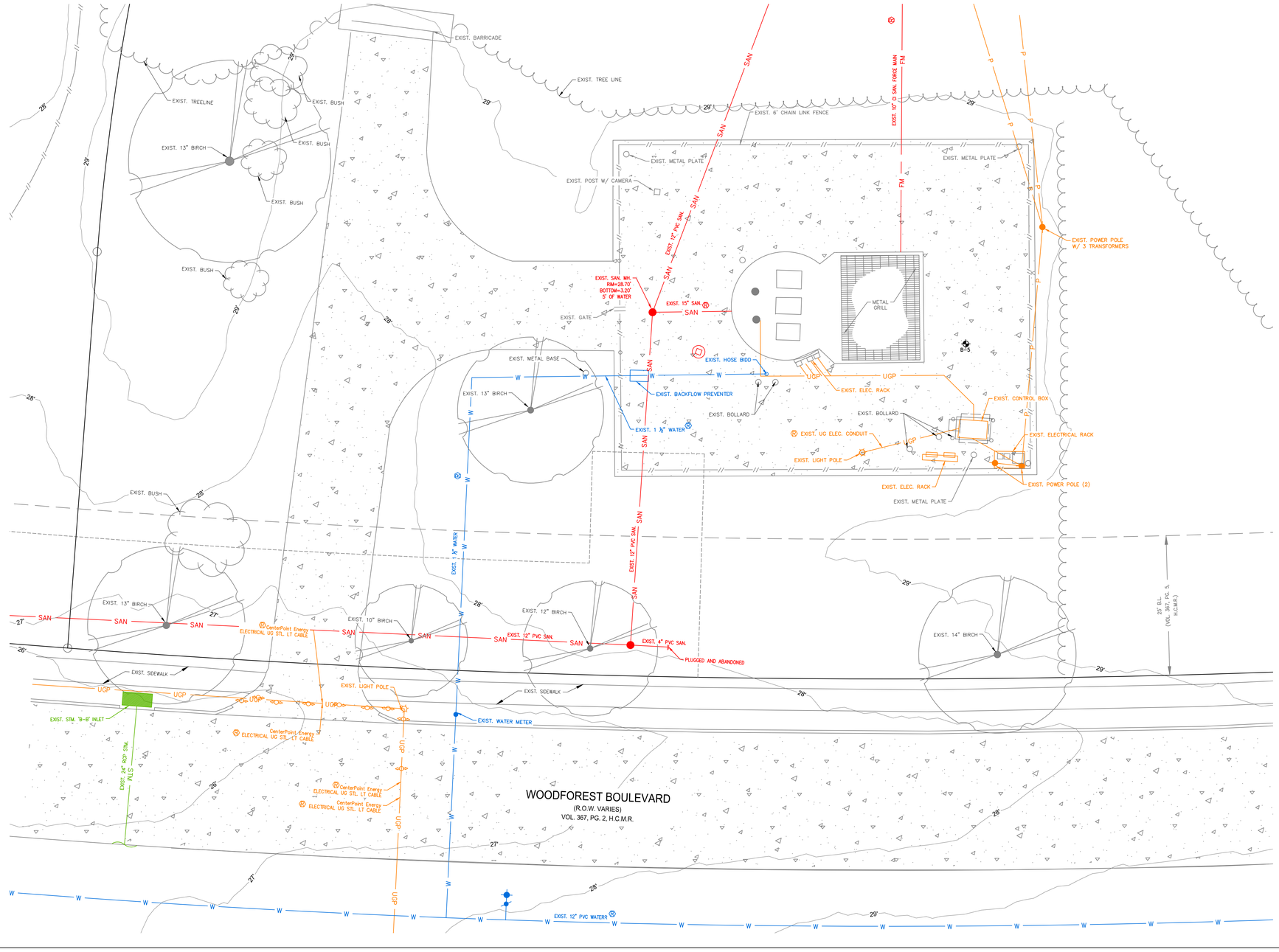



10' 0' 10'

SCALE

1"=10'

NO.	DATE	REVISION	APP.

BENCHMARK:

CITY OF HOUSTON MONUMENT 5759-8502 IS AN ALUMINUM DISK ON TOP OF INLET LOCATED ALONG WOODFOREST BOULEVARD APPROXIMATELY 450 FEET WEST FROM THE GREENS BAYOU BRIDGE.

ELEV. 32.40 FEET NAVD 1988, 2001 ADJUSTMENT (PROJECT DATUM)
ELEV. 29.14 FEET NAVD 1988, (GEOID 88')*

* OBSERVED BY GPS SURVEYING AND PROCESSED IN REFERENCE TO THE CORS DATED NOVEMBER 12, 2005

FLOODPLAIN NOTE:

AS PER FIRM PANEL 48201C0715M. THIS TRACT LIES WITHIN THE 500-YEAR FLOODPLAIN.
100-YR FLOODPLAIN ELEV. 25.00'
500-YR FLOODPLAIN ELEV. 28.50'
FIRM PANEL: 48201C0715M

T.B.M #46:

SET "X" CUT IN CONCRETE ON MEDIAN NOSE ON WOODFOREST BLVD ABOUT 0.3 MILE WEST FORM THE INTERSECTION OF NORMANDY ST
ELEV.= 29.98 FT.

EXISTING UTILITY NOTE:

EXISTING UNDERGROUND UTILITY INFORMATION (TYPE, SIZE & OWNERSHIP) ARE SHOWN APPROXIMATELY BASED ON THE AVAILABLE RECORD DRAWINGS AND FIELD VERIFICATION (WHERE FEASIBLE) WITHOUT PROBING AND EXCAVATION. NO WARRANTY IS MADE AS TO THE ACCURACY OR COMPLETENESS OF UTILITY LOCATION SHOWN ON THE DRAWING. CAUTION SHOULD BE EXERCISED WHEN EXCAVATING OR BORE AND JACKING IN THE VICINITY OF UNDERGROUND UTILITIES. OWNERS OF THE UTILITIES SHOULD BE NOTIFIED PRIOR TO SUCH ACTIVITIES. CALL UTILITY COORDINATING COMMITTEE AT 713-223-4567, AT LEAST 48 HOURS PRIOR TO EXCAVATING IN THE STREET RIGHT-OF-WAY.

NOTICE:
FOR YOUR SAFETY, YOU ARE REQUIRED BY TEXAS LAW TO CALL 811 AT LEAST 48 HOURS BEFORE YOU DIG SO THAT UNDERGROUND LINES CAN BE MARKED. THIS SIGNATURE DOES NOT FULFILL YOUR OBLIGATION TO CALL 811

VERIFICATION OF PRIVATE UTILITY LINES

Date

CenterPoint Energy natural gas utilities shown. (Gas service lines are not shown). This signature not be used for conflict verification.

Signature valid for six months.

Date

CenterPoint Energy/UNDERGROUND Electrical Facilities Verification ONLY. (This signature verifies existing underground facilities - not to be used for conflict verification)

Signature valid for six months.

Date

Approved for AT&T underground conduit facilities only.
Signature valid for one year.

IDS Engineering Group
13430 NW. Freeway, Suite 700
Houston, Tx. 77040
713.462.3178
TxEng Firm 2726 | TxSurv Firm 10110700

THIS DOCUMENT IS RELEASED FOR THE PURPOSE OF REVIEW UNDER THE AUTHORITY OF MARCEL KHOUW, P.E. 101807 ON 05/27/2026. IT IS NOT TO BE USED FOR CONSTRUCTION PURPOSES.

SURVEYED BY: KUO & ASSOCIATES, INC.
TBPE FIRM #F-4578; TBPLS FIRM #1007560

CITY OF HOUSTON

HOUSTON PUBLIC WORKS

LIFT STATION RENEWAL AND REPLACEMENT FY 2023

WOODFOREST LIFT STATION EXISTING SITE PLAN

WBS NUMBER	FOR CITY OF HOUSTON USE ONLY
R-000267-0179-4	
DRAWING SCALE	
HORIZ: 1" = 10' VERT: N/A	
CITY OF HOUSTON PM	
NAWARAJ PANTA, P.E.	
DWG. NO. WDF-C-01	SHEET NO. 257 OF 361

PLOTTED: 5/13/2026 6:44 PM

LEGEND

- EXISTING CONCRETE PAVEMENT
- REMOVE EXISTING CONCRETE PAVEMENT
- SITE DEMOLITION
- EXISTING CONCRETE SIDEWALK
- REMOVE EXISTING CONCRETE SIDEWALK
- LIFT STATION PARTIAL DEMOLITION (SEE NOTE 1)
- ABANDON ANY UNDERGROUND UTILITY
- REMOVE ANY UNDERGROUND UTILITY
- REMOVE EXISTING FENCE
- FILTER FABRIC FENCE
- CTW — CONCRETE TRUCK WASHOUT
  * CONTRACTOR TOO PLACE CTW AS NECESSARY WITHIN COH PROPERTY OR EASEMENTS AS APPROVED BY PROJECT MANAGER
- I.P.B.-II — INLET PROTECTION BARRIER

NOTES:

1. EXISTING LIFT STATION WET WELL TO REMAIN.
2. SEE ELECTRICAL PLANS ON DWG. NO.'S WDF-E-01 THROUGH WDF-I-15 FOR ELECTRICAL IMPROVEMENTS.
3. CONTRACTOR SHALL COORDINATE WITH CENTERPOINT ENERGY TO DE-ENERGIZE THE LIFT STATION AND OTHER ELECTRICAL EQUIPMENT ON SITE.
4. CONTRACTOR SHALL PROTECT THE EXISTING CONDUIT AND CABLE. IF CABLE OR CONDUIT IS DAMAGED CONTRACTOR SHALL REPLACE AT NO ADDITIONAL COST TO THE CITY.
5. REMOVE DAMAGED AND CRACKED SIDEWALK.
6. REMOVE THE EXISTING FORCE MAIN TO THE NEAREST PIPE JOINT AND TIE PROPOSED FORCE MAIN TO EXISTING USING RESTRAINED JOINTS.
7. THE EXISTING FORCE MAIN IS ASSUMED TO BE DUCTILE IRON BELL AND SPIGOT AND SHALL BE FIELD VERIFIED BY THE CONTRACTOR.
8. THE CITY OF HOUSTON WILL RETAIN SALVAGE RIGHTS TO ALL MATERIAL AND EQUIPMENT. ALL MATERIALS AND EQUIPMENT RETAINED BY THE CITY OF HOUSTON SHALL BE DELIVERED TO A POINT DESIGNATED BY CITY OF HOUSTON REPRESENTATIVE (MR. ARTURO CARRILLO 832-395-3558). ANY MATERIAL OR EQUIPMENT NOT RETAINED BY THE CITY OF HOUSTON SHALL BE REMOVED FROM THE SITE AND DISPOSED OF BY THE CONTRACTOR IN ACCORDANCE WITH APPLICABLE REGULATIONS.
9. CONTRACTOR TO SAW-CUT, REMOVE, AND REPLACE CONCRETE AS NECESSARY. NO SEPARATE PAY.
10. FOR REQUIRED STORMWATER POLLUTION PREVENTION PLAN MEASURES ON PROPOSED INLETS, SEE DRAINAGE PLAN.

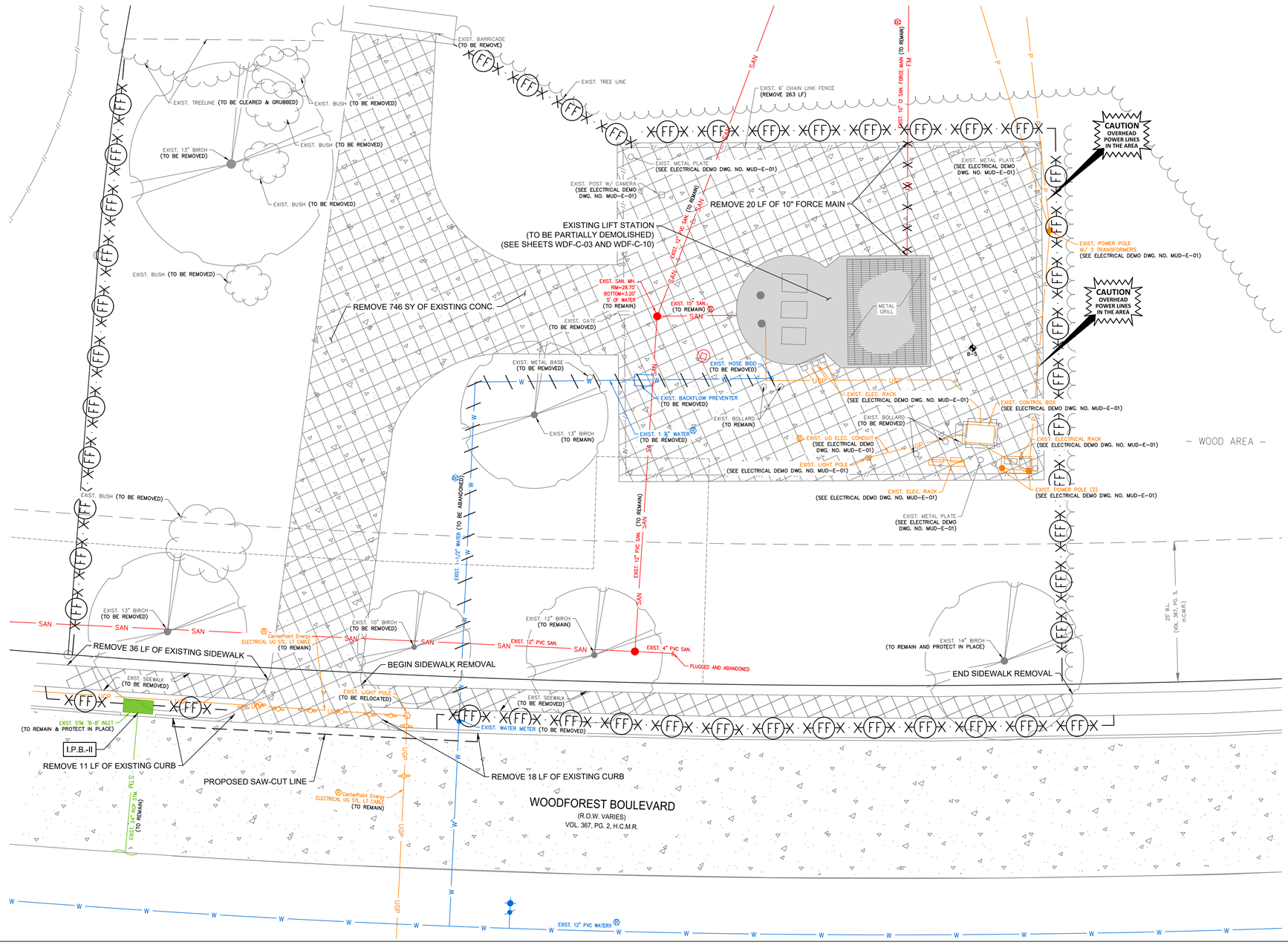

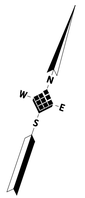

10' 0' 10'
SCALE
1"=10'

BENCHMARK:
CITY OF HOUSTON MONUMENT 5759-8502 IS AN ALUMINUM DISK ON TOP OF INLET LOCATED ALONG WOODFOREST BOULEVARD APPROXIMATELY 450 FEET WEST FROM THE GREENS BAYOU BRIDGE.

ELEV. 32.40 FEET NAVD 1988, 2001 ADJUSTMENT (PROJECT DATUM)
ELEV. 29.14 FEET NAVD 1988, (GEOID 88')*

* OBSERVED BY GPS SURVEYING AND PROCESSED IN REFERENCE TO THE CORS DATED NOVEMBER 12, 2005

FLOODPLAIN NOTE:
AS PER FIRM PANEL 48201C0715M. THIS TRACT LIES WITHIN THE 500-YEAR FLOODPLAIN.
100-YR FLOODPLAIN ELEV. 25.00'
500-YR FLOODPLAIN ELEV. 28.50'
FIRM PANEL: 48201C0715M

T.B.M #46:

SET "X" CUT IN CONCRETE ON MEDIAN NOSE ON WOODFOREST BLVD ABOUT 0.3 MILE WEST FORM THE INTERSECTION OF NORMANDY ST
ELEV.= 29.98 FT.

EXISTING UTILITY NOTE:
EXISTING UNDERGROUND UTILITY INFORMATION (TYPE, SIZE & OWNERSHIP) ARE SHOWN APPROXIMATELY BASED ON THE AVAILABLE RECORD DRAWINGS AND FIELD VERIFICATION (WHERE FEASIBLE) WITHOUT PROBING AND EXCAVATION. NO WARRANTY IS MADE AS TO THE ACCURACY OR COMPLETENESS OF UTILITY LOCATION SHOWN ON THE DRAWING. CAUTION SHOULD BE EXERCISED WHEN EXCAVATING OR BORE AND JACKING IN THE VICINITY OF UNDERGROUND UTILITIES. OWNERS OF THE UTILITIES SHOULD BE NOTIFIED PRIOR TO SUCH ACTIVITIES. CALL UTILITY COORDINATING COMMITTEE AT 713-223-4567, AT LEAST 48 HOURS PRIOR TO EXCAVATING IN THE STREET RIGHT-OF-WAY.

NO.	DATE	REVISION	APP.

NOTICE:
FOR YOUR SAFETY, YOU ARE REQUIRED BY TEXAS LAW TO CALL 811 AT LEAST 48 HOURS BEFORE YOU DIG SO THAT UNDERGROUND LINES CAN BE MARKED. THIS SIGNATURE DOES NOT FULFILL YOUR OBLIGATION TO CALL 811

VERIFICATION OF PRIVATE UTILITY LINES

Date

CenterPoint Energy natural gas utilities shown. (Gas service lines are not shown). This signature not be used for conflict verification.

Signature valid for six months.

Date

CenterPoint Energy/UNDERGROUND Electrical Facilities Verification ONLY. (This signature verifies existing underground facilities – not to be used for conflict verification)

Signature valid for six months.

Date

Approved for AT&T underground conduit facilities only. Signature valid for one year.

IDS Engineering Group
13430 NW. Freeway, Suite 700
Houston, Tx. 77040
713.462.3178
TxEng Firm 2726 | TxSurv Firm 10110700

SURVEYED BY: KUO & ASSOCIATES, INC.
TBPE FIRM #F-4578; TBPLS FIRM #1007560

THIS DOCUMENT IS RELEASED FOR THE PURPOSE OF REVIEW UNDER THE AUTHORITY OF MARCEL KHOUW, P.E. 101807 ON 05/27/2026. IT IS NOT TO BE USED FOR CONSTRUCTION PURPOSES.

CITY OF HOUSTON
HOUSTON PUBLIC WORKS

LIFT STATION RENEWAL AND REPLACEMENT FY 2023

WOODFOREST LIFT STATION SITE DEMOLITION PLAN AND SWPPP

WBS NUMBER	FOR CITY OF HOUSTON USE ONLY
R-000267-0179-4	
DRAWING SCALE	
HORIZ: 1" = 10' VERT: N/A	
CITY OF HOUSTON PM	
NAWARAJ PANTA, P.E.	
SHEET NO. 258 OF 361	

DWG. NO. WDF-C-02

FILE PATH: \\idseg.com\FS\Projects\0000\005708500 CoH Lift Stations - FY 2023\CAD\DWG\PRODUCTION\258-WOODFOREST SITE PLAN AND DEMO.dwg

PLOTTED: 5/14/2026 2:16 PM

LIFT STATION DEMOLITION AND ABANDONMENT NOTES:

1. THIS DRAWING IS A REPRODUCTION OF THE EXISTING LIFT STATION CONSTRUCTION DRAWINGS AND INTENDED TO PROVIDE GENERAL INFORMATION FOR STATION DEMOLITION. THE CONTRACTOR IS RESPONSIBLE FOR DETERMINING THE ACTUAL WORK REQUIRED FOR DEMOLITION AND REMOVAL OF STRUCTURAL, MECHANICAL, AND ELECTRICAL COMPONENTS. A CLAIM FOR CHANGED CONDITIONS BETWEEN THE EXISTING CONDITIONS AND THE RECORD DRAWINGS WILL NOT BE CONSIDERED.
2. NO DEMOLITION IS TO BE PERFORMED UNTIL BYPASS PUMPING HAS BEEN INSTALLED AND OPERATIONAL.
3. THE CITY OF HOUSTON WILL RETAIN SALVAGE RIGHTS TO ALL MATERIAL AND EQUIPMENT. ALL MATERIALS AND EQUIPMENT RETAINED BY THE CITY OF HOUSTON SHALL BE DELIVERED TO A POINT DESIGNATED BY CITY OF HOUSTON REPRESENTATIVE (MR. ARTURO CARRILLO 832-395-3558). ANY MATERIAL OR EQUIPMENT NOT RETAINED BY THE CITY OF HOUSTON SHALL BE REMOVED FROM THE SITE AND DISPOSED OF BY THE CONTRACTOR IN ACCORDANCE WITH APPLICABLE REGULATIONS.
4. WHEN REMOVING EXISTING PUMPS, CONTRACTOR SHALL LEAVE AS MUCH WIRE/CABLE AS POSSIBLE IN ORDER FOR THE CITY TO REUSE THE PUMPS.
5. CONTRACTOR SHALL NOTIFY TEXAS DEPARTMENT OF HEALTH (DEPARTMENT) ON A FORM SPECIFIED BY THE DEPARTMENT OF ANY ASBESTOS ABATEMENT ACTIVITY, RENOVATION OR OPERATIONS AND MAINTENANCE ACTIVITY AFFECTING ASBESTOS-CONTAINING BUILDING MATERIALS, OR ANY DEMOLITION IN FACILITIES OR PUBLIC BUILDINGS.
6. CONCRETE SLAB AND WALLS INDICATED ON THIS PLAN SHALL BE REMOVED TO 5 FEET BELOW FINISHED GRADE AS PER SPECIFICATION SECTION 02220.
7. ALL REMAINING WALL OPENINGS IN THE VALVE VAULT SHALL BE SEALED WITH NON-SHRINK GROUT.
8. CONTRACTOR SHALL BACKFILL THE ABANDONED AND DEMOLISHED VALVE VAULT. BACKFILL SHALL BE SUITABLE FILL AND FLOWABLE FILL AS SHOWN AND COMPACTED PROPERLY UP TO THE PROPOSED CONCRETE DISCHARGE ASSEMBLY PAD.
9. THE CONTRACTOR SHALL COORDINATE WITH CENTERPOINT ENERGY TO TEMPORARILY DISCONNECT ELECTRICAL POWER AS NEEDED.
10. THE EXISTING WET WELL SHALL BE CLEANED OF ALL DEBRIS, WASTEWATER AND OTHER RESIDUES BY AN APPROVED CITY OF HOUSTON DISPOSAL CONTRACTOR.
11. THE CONTRACTOR SHALL DISPOSE OF ANY LIQUID OR SOLID WASTE FOUND IN THE WET WELL AT A DISPOSAL FACILITY LICENSED AND APPROVED BY THE STATE OF TEXAS. THE CONTRACTOR SHALL BE RESPONSIBLE FOR THE COST OF TRANSPORTATION, DISPOSAL AND TESTING REQUIRED BY STATE AND FEDERAL REGULATORY AGENCIES, AND BY THE DISPOSAL FACILITY.
12. PRIOR TO THE CLEAN-OUT AND CLEANING OF THE EXISTING LIFT STATION WET WELL, CONTRACTOR TO SUBMIT PROOF TO C.O.H. CONSTRUCTION PM THAT TRANSPORTER/HAULER TO BE USED FOR THE TRANSPORT OF THE CONTENTS OF THE WET WELL (I.E., SOLIDS, GRIT, SEWAGE SLUDGE, AND DOMESTIC SLUDGE, ETC.) IS REGISTERED BY THE TEXAS COMMISSION ON ENVIRONMENTAL QUALITY (TCEQ) AS A SLUDGE TRANSPORTER AND THE TRANSPORTER'S REGISTRATION IS CURRENT AND VALID DURING THE PERIOD OF PERFORMANCE.
13. CONTRACTOR SHALL SUBMIT PROOF OF SUBMISSION OF REQUIRED ASBESTOS/DEMOLITION NOTIFICATION FORM TO THE TEXAS DEPARTMENT OF STATE HEALTH SERVICES TO C.O.H. CONSTRUCTION PM. THE NOTIFICATION TO THE STATE MUST BE PROVIDED A MINIMUM OF 10 DAYS PRIOR TO THE STARTUP OF ANY DEMOLITION ACTIVITIES AT THE SITE.
14. CONTRACTOR SHALL OBTAIN CITY OF HOUSTON DEMOLITION PERMIT (SEE FORM CE 1075 REV. 01/01/2015 FOR GUIDELINES) OR SUBMIT PROOF OF NON-APPLICABILITY TO C.O.H. CONSTRUCTION PROJECT MANAGER PRIOR TO THE STARTUP OF DEMOLITION ACTIVITIES AT THE SITE. THE CONTRACTOR SHALL OBTAIN ANY STATE DEMOLITION PERMITS REQUIRED.

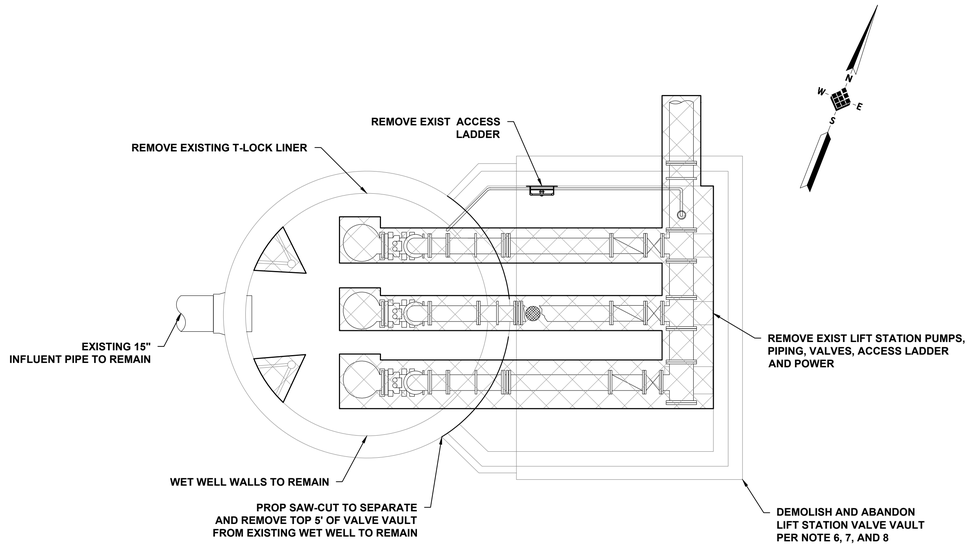

LIFT STATION PLAN

SCALE: N.T.S.

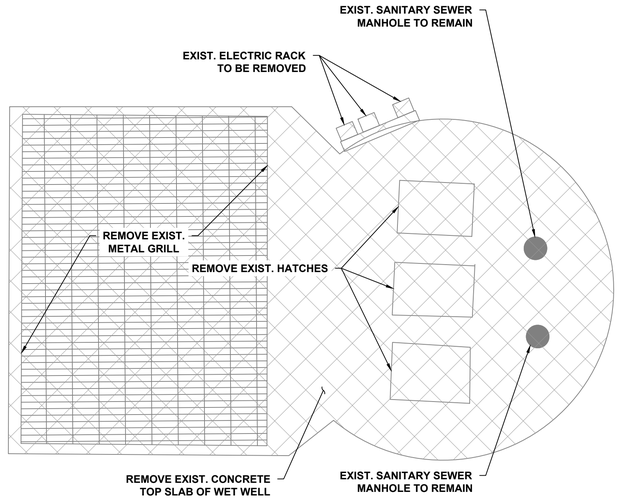

PLAN AT GRADE

SCALE: N.T.S.

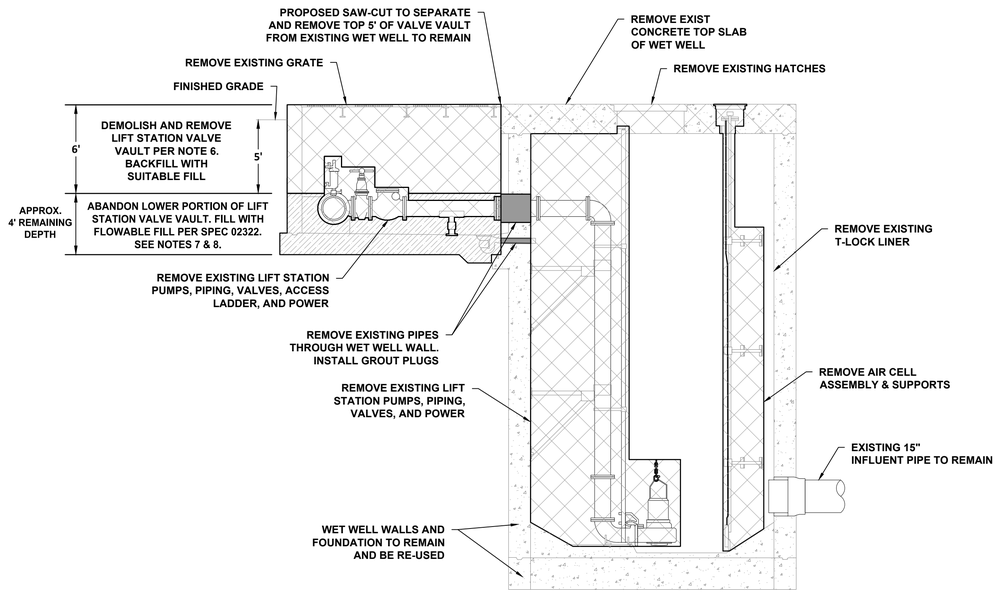

LIFT STATION SECTION

SCALE: N.T.S.

LEGEND

DEMOLITION AREA

ABANDON VALVE VAULT

NO.	DATE	REVISION	APP.

IDS Engineering Group
13430 NW. Freeway, Suite 700
Houston, Tx. 77040
713.462.3178
TxEng Firm 2726 | TxSurv Firm 10110700

SURVEYED BY: KUO & ASSOCIATES, INC.
TBPE FIRM #F-4578; TBPLS FIRM #1007560

THIS DOCUMENT IS RELEASED FOR THE PURPOSE OF REVIEW UNDER THE AUTHORITY OF MARCEL KHOUW. P.E. 101807 ON 05/27/2026. IT IS NOT TO BE USED FOR CONSTRUCTION PURPOSES.

CITY OF HOUSTON
HOUSTON PUBLIC WORKS

LIFT STATION RENEWAL AND REPLACEMENT FY 2023

WOODFOREST LIFT STATION SECTION DEMOLITION

WBS NUMBER	FOR CITY OF HOUSTON USE ONLY
R-000267-0179-4	
DRAWING SCALE	
HORIZ: AS NOTED VERT: N/A	
CITY OF HOUSTON PM	
NAWARAJ PANTA, P.E.	
SHEET NO. 259 OF 361	

DWG. NO. WDF-C-03

FILE PATH: \\tdseg.com\FS\Projects\0000\005708500 CoH Lift Stations - FY 2023\CAD\DWG\PRODUCTION\259-WOODFOREST SECTION DEMO.dwg

PLOTTED: 5/13/2026 6:44 PM

FILE PATH: \\idseg.com\FS\Projects\0000\005708500 CoH Lift Stations - FY 2023\CAD\DWG\PRODUCTION\260-WOODFOREST PROP SITE PLAN.dwg

PROPOSED POINT TABLE

POINT	NORTHING	EASTING	DESCRIPTION	ELEVATION
1	13856458.23	3171592.04	PROP. 45° BEND	23.72'
2	13856462.92	3171594.26	PROP. 45° BEND	23.72'
3	13856480.76	3171587.62	PROP. TIE-IN TO EXIST. FM	23.72'

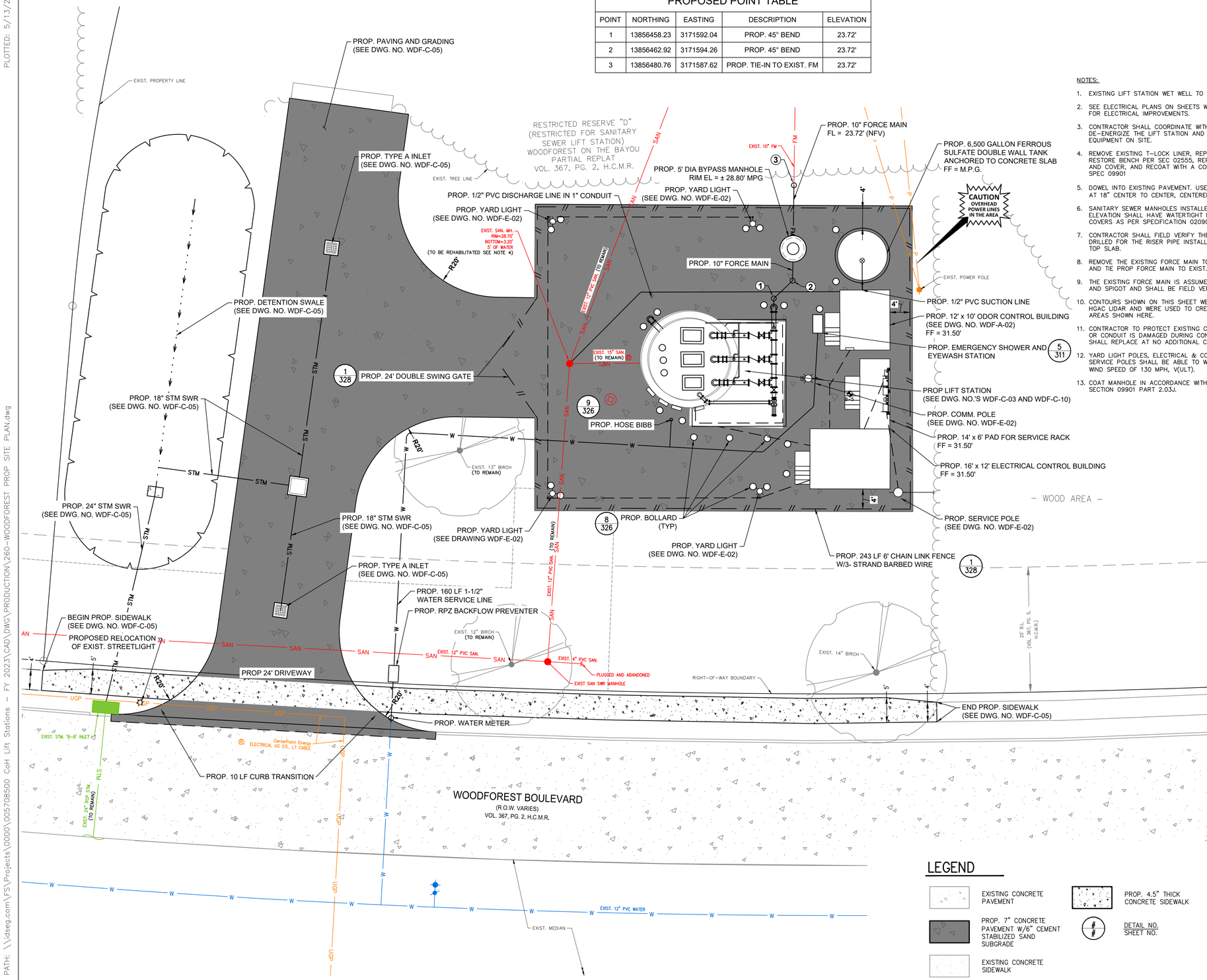

NOTES:

1. EXISTING LIFT STATION WET WELL TO REMAIN.
2. SEE ELECTRICAL PLANS ON SHEETS WDF-E-01 THROUGH WDF-I-15 FOR ELECTRICAL IMPROVEMENTS.
3. CONTRACTOR SHALL COORDINATE WITH CENTERPOINT ENERGY TO DE-ENERGIZE THE LIFT STATION AND OTHER ELECTRICAL EQUIPMENT ON SITE.
4. REMOVE EXISTING T-LOCK LINER, REPAIR MANHOLE WALL AND RESTORE BENCH PER SEC 02555, REPLACE MANHOLE FRAME, RING, AND COVER, AND RECOAT WITH A COH APPROVED MATERIAL PER SPEC 09901
5. DOWEL INTO EXISTING PAVEMENT. USE 24" x #4 SMOOTH DOWELS AT 18" CENTER TO CENTER, CENTERED ON SAWCUT.
6. SANITARY SEWER MANHOLES INSTALLED BELOW THE FLOODPLAIN ELEVATION SHALL HAVE WATERTIGHT MANHOLE FRAMES AND COVERS AS PER SPECIFICATION 02090.
7. CONTRACTOR SHALL FIELD VERIFY THE LOCATION OF THE HOLES DRILLED FOR THE RISER PIPE INSTALLATION THRU THE WET VAULT TOP SLAB.
8. REMOVE THE EXISTING FORCE MAIN TO THE NEAREST PIPE JOINT AND TIE PROP FORCE MAIN TO EXIST. USE RESTRAINED JOINTS.
9. THE EXISTING FORCE MAIN IS ASSUMED TO BE DUCTILE IRON BELL AND SPIGOT AND SHALL BE FIELD VERIFIED BY THE CONTRACTOR.
10. CONTOURS SHOWN ON THIS SHEET WERE DERIVED FROM 2018 HGAC LIDAR AND WERE USED TO CREATE EXISTING DRAINAGE AREAS SHOWN HERE.
11. CONTRACTOR TO PROTECT EXISTING CONDUIT AND CABLE. IF CABLE OR CONDUIT IS DAMAGED DURING CONSTRUCTION, CONTRACTOR SHALL REPLACE AT NO ADDITIONAL COST TO THE CITY.
12. YARD LIGHT POLES, ELECTRICAL & COMMUNICATION POLES, AND SERVICE POLES SHALL BE ABLE TO WITHSTAND ULTIMATE DESIGN WIND SPEED OF 130 MPH, V(ULT).
13. COAT MANHOLE IN ACCORDANCE WITH SYSTEM 108 PER SPEC SECTION 09901 PART 2.03J.

10' 0' 10'
SCALE
1"=10'

BENCHMARK:

CITY OF HOUSTON MONUMENT 5759-8502 IS AN ALUMINUM DISK ON TOP OF INLET LOCATED ALONG WOODFOREST BOULEVARD APPROXIMATELY 450 FEET WEST FROM THE GREENS BAYOU BRIDGE.

ELEV. 32.40 FEET NAVD 1988, 2001 ADJUSTMENT (PROJECT DATUM)
ELEV. 29.14 FEET NAVD 1988, (GEOID 88')*

* OBSERVED BY GPS SURVEYING AND PROCESSED IN REFERENCE TO THE CORS DATED NOVEMBER 12, 2005

FLOODPLAIN NOTE:

AS PER FIRM PANEL 48201C0715M. THIS TRACT LIES WITHIN THE
500-YEAR FLOODPLAIN.
100-YR FLOODPLAIN ELEV. 25.00'
500-YR FLOODPLAIN ELEV. 28.50'
FIRM PANEL: 48201C0715M

T.B.M #46:

SET "X" CUT IN CONCRETE ON MEDIAN NOSE ON WOODFOREST BLVD ABOUT 0.3 MILE WEST FORM THE INTERSECTION OF NORMANDY ST
ELEV.= 29.98 FT.

EXISTING UTILITY NOTE:

EXISTING UNDERGROUND UTILITY INFORMATION (TYPE, SIZE & OWNERSHIP) ARE SHOWN APPROXIMATELY BASED ON THE AVAILABLE RECORD DRAWINGS AND FIELD VERIFICATION (WHERE FEASIBLE) WITHOUT PROBING AND EXCAVATION. NO WARRANTY IS MADE AS TO THE ACCURACY OR COMPLETENESS OF UTILITY LOCATION SHOWN ON THE DRAWING. CAUTION SHOULD BE EXERCISED WHEN EXCAVATING OR BORE AND JACKING IN THE VICINITY OF UNDERGROUND UTILITIES. OWNERS OF THE UTILITIES SHOULD BE NOTIFIED PRIOR TO SUCH ACTIVITIES. CALL UTILITY COORDINATING COMMITTEE AT 713-223-4567, AT LEAST 48 HOURS PRIOR TO EXCAVATING IN THE STREET RIGHT-OF-WAY.

LEGEND

- EXISTING CONCRETE PAVEMENT
- PROP. 7" CONCRETE PAVEMENT W/6" CEMENT STABILIZED SAND SUBGRADE
- EXISTING CONCRETE SIDEWALK
- PROP. 4.5" THICK CONCRETE SIDEWALK
- # / # DETAIL NO. / SHEET NO.

NOTICE:
FOR YOUR SAFETY, YOU ARE REQUIRED BY TEXAS LAW TO CALL 811 AT LEAST 48 HOURS BEFORE YOU DIG SO THAT UNDERGROUND LINES CAN BE MARKED. THIS SIGNATURE DOES NOT FULFILL YOUR OBLIGATION TO CALL 811

VERIFICATION OF PRIVATE UTILITY LINES

Date

CenterPoint Energy natural gas utilities shown. (Gas service lines are not shown). This signature not be used for conflict verification.

Signature valid for six months.

Date

CenterPoint Energy/UNDERGROUND Electrical Facilities Verification ONLY. (This signature verifies existing underground facilities - not to be used for conflict verification)

Signature valid for six months.

Date

Approved for AT&T underground conduit facilities only.
Signature valid for one year.

NO.	DATE	REVISION	APP.

IDS Engineering Group
13430 NW. Freeway, Suite 700
Houston, Tx. 77040
713.462.3178
TxEng Firm 2726 | TxSurv Firm 10110700

SURVEYED BY: KUO & ASSOCIATES, INC.
TBPE FIRM #F-4578; TBPLS FIRM #1007560

THIS DOCUMENT IS RELEASED FOR THE PURPOSE OF REVIEW UNDER THE AUTHORITY OF MARCEL KHOUW, P.E. 101807 ON 05/27/2026. IT IS NOT TO BE USED FOR CONSTRUCTION PURPOSES.

CITY OF HOUSTON
HOUSTON PUBLIC WORKS

LIFT STATION RENEWAL AND REPLACEMENT FY 2023

WOODFOREST LIFT STATION PROPOSED SITE PLAN

WBS NUMBER	FOR CITY OF HOUSTON USE ONLY
R-000267-0179-4	
DRAWING SCALE	
HORIZ: 1" = 10' VERT: N/A	
CITY OF HOUSTON PM	
NAWARAJ PANTA, P.E.	
DWG. NO. WDF-C-04	SHEET NO. 260 OF 361

PLOTTED: 5/13/2026 6:44 PM

NOTES:

1. CONTRACTOR SHALL SUBMIT EXPANSION AND CONTROL JOINT PLAN FOR APPROVAL.
2. EXPANSION JOINTS SHALL BE INSTALLED AT ALL CURB RETURNS AND AT A MAXIMUM SPACING OF 60–FT INTERVALS. PLACE 3/4 INCH PREFORMED EXPANSION JOINTS THROUGH CURB AND GUTTERS AT LOCATIONS OF EXPANSION JOINTS IN PAVEMENT, AT END OF RADIUS RETURNS, AT STREET INTERSECTIONS AND DRIVEWAYS, AND AT CURB INLETS.
3. LONGITUDINAL CONSTRUCTION JOINTS SHALL BE SPACED AT A MAXIMUM OF 15 FEET. DEFORMED METAL STRIP TO BE INSTALLED MAXIMUM 1/4 INCH BELOW FINISHED TOP OF PAVEMENTS.
4. RESPONSIBILITY FOR MAINTENANCE OF THE DETENTION FACILITY WILL BE BY THE PROPERTY OWNER.
5. SUBSURFACE DRAINAGE SYSTEMS ARE REQUIRED TO BE DRAINED IN 48 HOURS.
6. OFFSITE FLOW IS UNAFFECTED BY THE PROPOSED LIFT STATION STRUCTURE AND CONCRETE PAVING.
7. DRAINAGE AREA EXTENDS BEYOND THE LIMITS OF THIS SHEET.
8. SIDEWALK THICKNESS SHALL BE 7" THICK WHEN LOCATED WITHIN THE DRIVEWAY. SIDEWALK LOCATED OUTSIDE OF DRIVEWAY SHALL BE 4.5" THICK PER DETAIL ON DWG. NO. C–07

STORMWATER DETENTION CALCULATIONS

- GROSS AREA 1.8855 AC
- PROP. IMPERVIOUS AREA 0.1862 AC
- STORAGE RATE 0.8000 AC-FT/AC
- STORAGE REQUIRED 0.1490 AC-FT

DETENTION CREDIT

- EXIST. IMPERVIOUS AREA REMOVED 0.1565 AC
- DETENTION CREDIT RATE 0.4000 AC-FT/AC
- DETENTION CREDIT VOLUME 0.0626 AC-FT

MITIGATION CALCULATIONS

- VOLUME OF FILL = (192 SF)(2.72 FT) + (120 SF)(2.72 FT) + (93 SF)(2.72 FT) + (84 SF)(2.72 FT)
  V_F=0.0290 AC-FT
- VOLUME OF CUT = 138 FT^3 (DEMO OF EXIST MCC BUILDING)
  V_C=0.0032 AC-FT
- VOLUME REQUIRED
  V_F-V_C = 0.0290 - 0.0032 = 0.0258 AC-FT

TOTAL DETENTION

- REQUIRED = 0.1397 AC-FT - 0.0626 AC-FT + 0.0258 AC-FT = 0.1029 AC-FT
- PROVIDED = 0.1092 AC-FT

PROPOSED POINT TABLE			
POINT	NORTHING	EASTING	DESCRIPTION
73	13856426.50	3171607.05	PROP. BOLLARD
74	13856432.13	3171605.11	PROP. BOLLARD
75	13856429.06	3171593.84	PROP. BOLLARD
76	13856426.63	3171587.15	PROP. BOLLARD
77	13856428.88	3171583.80	PROP. BOLLARD
78	13856429.18	3171578.85	PROP. BOLLARD
79	13856443.61	3171569.79	PROP. BOLLARD
80	13856447.28	3171571.29	PROP. BOLLARD
81	13856456.30	3171590.67	PROP. BOLLARD
82	13856457.68	3171594.44	PROP. BOLLARD
83	13856459.59	3171601.33	PROP. BOLLARD
84	13856465.88	3171602.39	PROP. BOLLARD

PROPOSED POINT TABLE			
POINT	NORTHING	EASTING	DESCRIPTION
87	13856475.53	3171598.63	PROP. BOLLARD
88	13856407.33	3171564.01	PROP. BOLLARD
89	13856406.14	3171566.53	PROP. BOLLARD
90	13856421.70	3171601.73	PROP. BOLLARD
91	13856422.64	3171604.35	PROP. BOLLARD
92	13856470.35	3171584.35	PROP. BOLLARD
93	13856469.26	3171581.79	PROP. BOLLARD
94	13856457.57	3171546.64	PROP. BOLLARD
95	13856454.99	3171545.58	PROP. BOLLARD

PROPOSED POINT TABLE				
POINT	NORTHING	EASTING	DESCRIPTION	ELEVATION
1	13856430.80	3171459.55	PROP. TOP BANK/MEG	28.74'
2	13856446.44	3171471.23	PROP. TOP BANK/MEG	27.70'
3	13856437.77	3171488.73	PROP. TOP BANK	27.72'
4	13856379.39	3171502.67	PROP. TOP BANK	26.15'
5	13856361.43	3171491.54	PROP. TOP BANK/MEG	27.25'
6	13856372.43	3171473.49	PROP. TOP BANK/MEG	27.95'
7	13856460.60	3171487.38	PROP. TOP OF PAVEMENT	28.70'
8	13856463.39	3171499.06	PROP. TOP OF PAVEMENT	28.58'
9	13856466.17	3171510.73	PROP. TOP OF PAVEMENT	28.81'
10	13856441.12	3171547.42	PROP. TOP OF PAVEMENT	28.38'
11	13856458.57	3171540.80	PROP. TOP OF PAVEMENT/MEG	28.84'
12	13856469.57	3171569.56	PROP. TOP OF PAVEMENT/MEG	28.88'
13	13856476.74	3171588.30	PROP. TOP OF PAVEMENT/MEG	28.84'
14	13856484.55	3171611.14	PROP. TOP OF PAVEMENT/MEG	28.81'
15	13856456.55	3171622.41	PROP. TOP OF PAVEMENT/MEG	28.78'
16	13856428.59	3171633.31	PROP. TOP OF PAVEMENT/MEG	28.55'
17	13856412.47	3171591.40	PROP. TOP OF PAVEMENT/MEG	28.54'
18	13856401.47	3171562.81	PROP. TOP OF PAVEMENT/MEG	28.53'
19	13856418.76	3171556.13	PROP. TOP OF PAVEMENT	28.19'
20	13856356.24	3171540.35	PROP. TOP OF PAVEMENT	26.36'
21	13856355.68	3171540.97	PROP. TOP OF PAVEMENT	26.36'
22	13856352.23	3171546.57	PROP. TOP OF PAVEMENT	26.36'
23	13856350.78	3171555.19	PROP. TOP OF PAVEMENT/MEG	26.36'
24	13856334.05	3171503.62	PROP. TOP OF PAVEMENT/MEG	25.52'
25	13856340.42	3171510.00	PROP. TOP OF PAVEMENT	25.72'
26	13856346.49	3171512.51	PROP. TOP OF PAVEMENT	25.89'
27	13856347.34	3171512.68	PROP. TOP OF PAVEMENT	25.92'
28	13856332.38	3171483.88	PROP. TOP OF PAVEMENT/MEG	25.85'
29	13856336.24	3171482.70	PROP. TOP OF PAVEMENT	25.95'
30	13856394.81	3171651.50	PROP. TOP OF PAVEMENT/MEG	28.76'
31	13856391.15	3171652.98	PROP. TOP OF PAVEMENT/MEG	28.49'
32	13856351.79	3171526.52	PROP. TOP OF PAVEMENT	26.07'
33	13856414.51	3171510.94	PROP. TOP OF PAVEMENT	27.09'
34	13856430.05	3171551.99	PROP. TOP OF PAVEMENT	28.07'
35	13856437.51	3171571.68	PROP. TOP OF PAVEMENT	28.84'
36	13856449.76	3171577.14	PROP. TOP OF PAVEMENT	28.84'
37	13856455.21	3171595.80	PROP. TOP OF PAVEMENT	28.82'
38	13856449.88	3171598.44	PROP. TOP OF SLAB	29.82'
39	13856435.33	3171603.55	PROP. TOP OF PAVEMENT	28.75'
40	13856431.90	3171584.74	PROP. TOP OF PAVEMENT	28.70'
41	13856436.63	3171572.05	PROP. TOP OF SLAB	29.84'
42	13856454.36	3171560.73	PROP. TOP OF PAVEMENT	28.39'
43	13856465.50	3171589.68	PROP. TOP OF PAVEMENT	28.78'
44	13856456.34	3171599.90	PROP. TOP OF PAVEMENT	28.70'
45	13856447.54	3171602.86	PROP. TOP OF PAVEMENT	28.63'
46	13856438.38	3171605.93	PROP. TOP OF PAVEMENT	28.56'
47	13856427.65	3171602.07	PROP. TOP OF PAVEMENT	28.47'
48	13856419.58	3171581.10	PROP. TOP OF PAVEMENT	28.30'
49	13856463.63	3171604.08	PROP. TOP OF PAVEMENT	28.80'
50	13856467.26	3171613.40	PROP. TOP OF PAVEMENT	28.80'
51	13856456.08	3171617.76	PROP. TOP OF PAVEMENT	28.75'
52	13856452.45	3171608.44	PROP. TOP OF PAVEMENT	28.70'
53	13856454.22	3171607.76	PROP. STAIRS	SEE DWG. NO. C-01
54	13856453.13	3171604.96	PROP. STAIRS	SEE DWG. NO. C-01
55	13856459.28	3171602.56	PROP. STAIRS	SEE DWG. NO. C-01
56	13856460.37	3171605.36	PROP. STAIRS	SEE DWG. NO. C-01
57	13856453.23	3171612.43	PROP. TOP OF PAVEMENT	M.P.G
58	13856455.39	3171618.03	PROP. TOP OF PAVEMENT	M.P.G
59	13856442.32	3171623.06	PROP. TOP OF PAVEMENT	M.P.G
60	13856442.34	3171623.12	PROP. TOP OF PAVEMENT	M.P.G
61	13856431.14	3171627.43	PROP. TOP OF PAVEMENT	M.P.G
62	13856425.40	3171612.49	PROP. TOP OF PAVEMENT	M.P.G
63	13856426.24	3171612.17	PROP. STAIRS	SEE DWG. NO. C-01
64	13856425.16	3171609.37	PROP. STAIRS	SEE DWG. NO. C-01
65	13856431.32	3171607.00	PROP. STAIRS	SEE DWG. NO. C-01
66	13856432.40	3171609.80	PROP. STAIRS	SEE DWG. NO. C-01
67	13856436.60	3171608.19	PROP. TOP OF PAVEMENT	M.P.G
68	13856440.16	3171617.46	PROP. TOP OF PAVEMENT	M.P.G.
69	13856443.80	3171616.06	PROP. STAIRS	SEE DWG. NO. C-01
70	13856442.73	3171613.26	PROP. STAIRS	SEE DWG. NO. C-01
71	13856448.89	3171610.89	PROP. STAIRS	SEE DWG. NO. C-01
72	13856449.96	3171613.69	PROP. STAIRS	SEE DWG. NO. C-01
85	13856468.89	3171592.04	PROP. BYPASS MANHOLE	M.P.G.
86	13856472.63	3171605.45	PROP. CHEMICAL TANK	M.P.G.

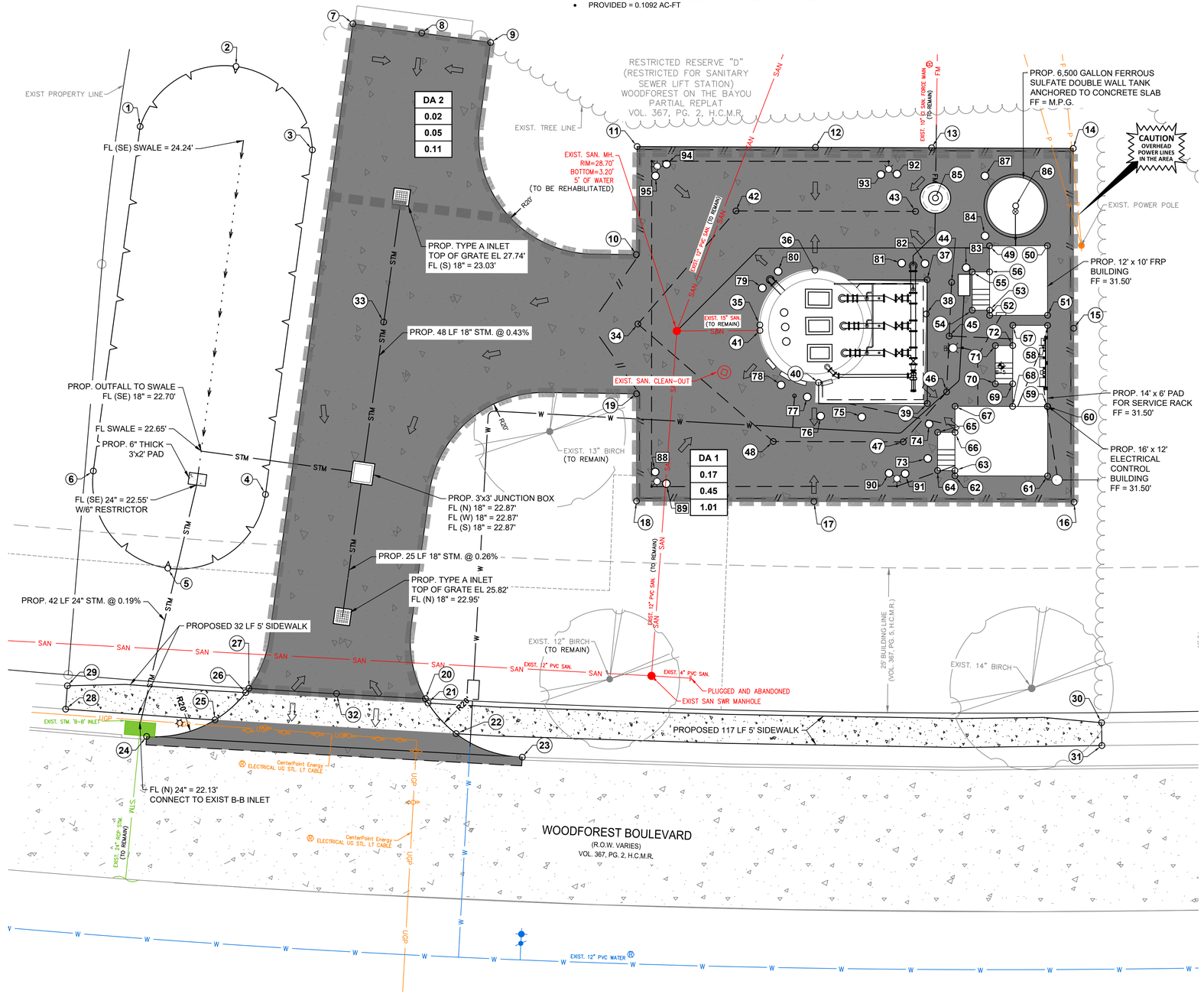

LEGEND

- EXISTING CONCRETE PAVEMENT
- PROP. 7" THICK CONCRETE PAVEMENT W/6" CEMENT STABILIZED SAND SUBGRADE
- EXISTING CONCRETE SIDEWALK
- PROP. CONCRETE SIDEWALK (SEE NOTE 8)
- ON-SITE SHEET FLOW DIRECTION
- OFFSITE SHEET FLOW DIRECTION (SEE NOTE 6)
- DRAINAGE AREA BOUNDARY
- SAW-CUT CONCRETE
- XX DRAINAGE AREA NO.
- X.XX ACRES
- X.XX 2-YR FLOW (CFS)
- X.XX 100-YR FLOW (CFS)
- (#) DETAIL NO. / SHEET NO.

SCALE
10' 0' 10'
1" = 10'

BENCHMARK:

CITY OF HOUSTON MONUMENT 5759–8502 IS AN ALUMINUM DISK ON TOP OF INLET LOCATED ALONG WOODFOREST BOULEVARD APPROXIMATELY 450 FEET WEST FROM THE GREENS BAYOU BRIDGE.

ELEV. 32.40 FEET NAVD 1988, 2001 ADJUSTMENT (PROJECT DATUM)
ELEV. 29.14 FEET NAVD 1988, (GEOID 88')*

* OBSERVED BY GPS SURVEYING AND PROCESSED IN REFERENCE TO THE CORS DATED NOVEMBER 12, 2005

FLOODPLAIN NOTE:

AS PER FIRM PANEL 48201C0715M. THIS TRACT LIES WITHIN THE 500–YEAR FLOODPLAIN.
100–YR FLOODPLAIN ELEV. 25.00'
500–YR FLOODPLAIN ELEV. 28.50'
FIRM PANEL: 48201C0715M

T.B.M #46:

SET "X" CUT IN CONCRETE ON MEDIAN NOSE ON WOODFOREST BLVD ABOUT 0.3 MILE WEST FORM THE INTERSECTION OF NORMANDY ST
ELEV.= 29.98 FT.

EXISTING UTILITY NOTE:

EXISTING UNDERGROUND UTILITY INFORMATION (TYPE, SIZE & OWNERSHIP) ARE SHOWN APPROXIMATELY BASED ON THE AVAILABLE RECORD DRAWINGS AND FIELD VERIFICATION (WHERE FEASIBLE) WITHOUT PROBING AND EXCAVATION. NO WARRANTY IS MADE AS TO THE ACCURACY OR COMPLETENESS OF UTILITY LOCATION SHOWN ON THE DRAWING. CAUTION SHOULD BE EXERCISED WHEN EXCAVATING OR BORE AND JACKING IN THE VICINITY OF UNDERGROUND UTILITIES. OWNERS OF THE UTILITIES SHOULD BE NOTIFIED PRIOR TO SUCH ACTIVITIES. CALL UTILITY COORDINATING COMMITTEE AT 713–223–4567, AT LEAST 48 HOURS PRIOR TO EXCAVATING IN THE STREET RIGHT–OF–WAY.

NOTICE:
FOR YOUR SAFETY, YOU ARE REQUIRED BY TEXAS LAW TO CALL 811 AT LEAST 48 HOURS BEFORE YOU DIG SO THAT UNDERGROUND LINES CAN BE MARKED. THIS SIGNATURE DOES NOT FULFILL YOUR OBLIGATION TO CALL 811

VERIFICATION OF PRIVATE UTILITY LINES

Date

CenterPoint Energy natural gas utilities shown. (Gas service lines are not shown). This signature not be used for conflict verification.

Signature valid for six months.

Date

CenterPoint Energy/UNDERGROUND Electrical Facilities Verification ONLY. (This signature verifies existing underground facilities – not to be used for conflict verification)

Signature valid for six months.

Date

Approved for AT&T underground conduit facilities only.
Signature valid for one year.

IDS Engineering Group
13430 NW. Freeway, Suite 700
Houston, Tx. 77040
713.462.3178
TxEng Firm 2726 | TxSurv Firm 10110700

SURVEYED BY: KUO & ASSOCIATES, INC.
TBPE FIRM #F–4578; TBPLS FIRM #1007560

THIS DOCUMENT IS RELEASED FOR THE PURPOSE OF REVIEW UNDER THE AUTHORITY OF MARCEL KHOUW, P.E. 101807 ON 05/27/2026. IT IS NOT TO BE USED FOR CONSTRUCTION PURPOSES.

CITY OF HOUSTON
HOUSTON PUBLIC WORKS

LIFT STATION RENEWAL AND REPLACEMENT FY 2023

WOODFOREST LIFT STATION GRADING PLAN AND DRAINAGE PLAN

WBS NUMBER	FOR CITY OF HOUSTON USE ONLY
R–000267–0179–4	
DRAWING SCALE	
HORIZ: 1" = 10' VERT: N/A	
CITY OF HOUSTON PM	
NAWARAJ PANTA, P.E.	

DWG. NO.	SHEET NO.
WDF–C–05	261 OF 361

NO.	DATE	REVISION	APP.

FILE PATH: \\idseg.com\FS\Projects\0000\005708500 CoH Lift Stations – FY 2023\CAD\DWG\PRODUCTION\261–WOODFOREST GRADING.dwg

PLOTTED: 5/13/2026 6:45 PM

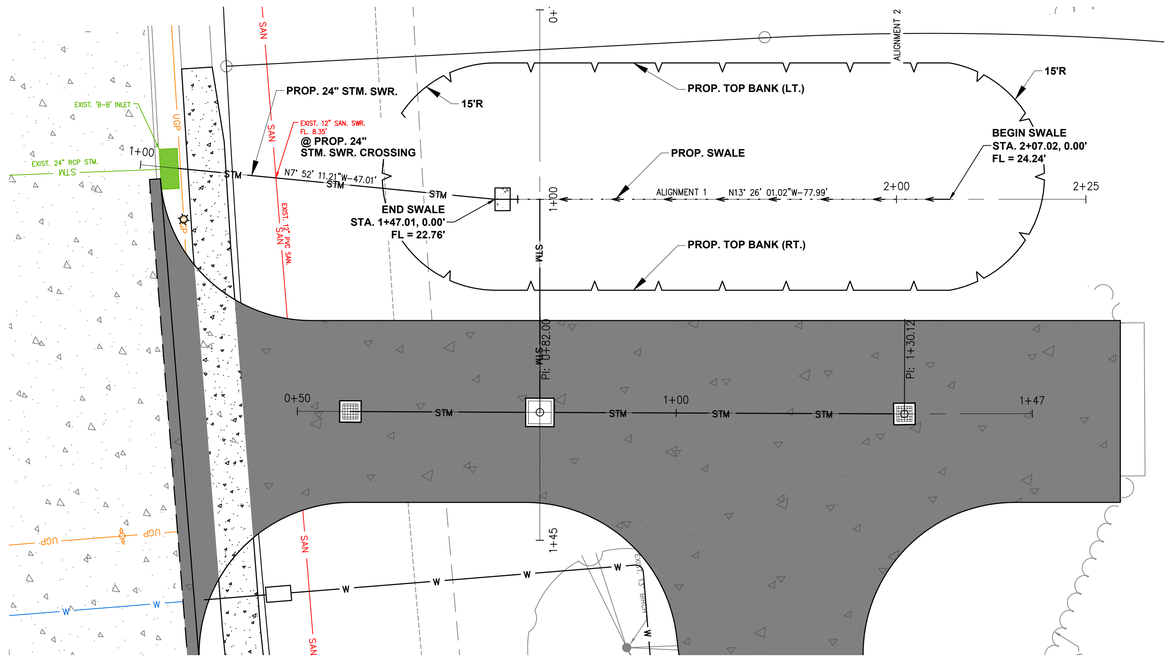

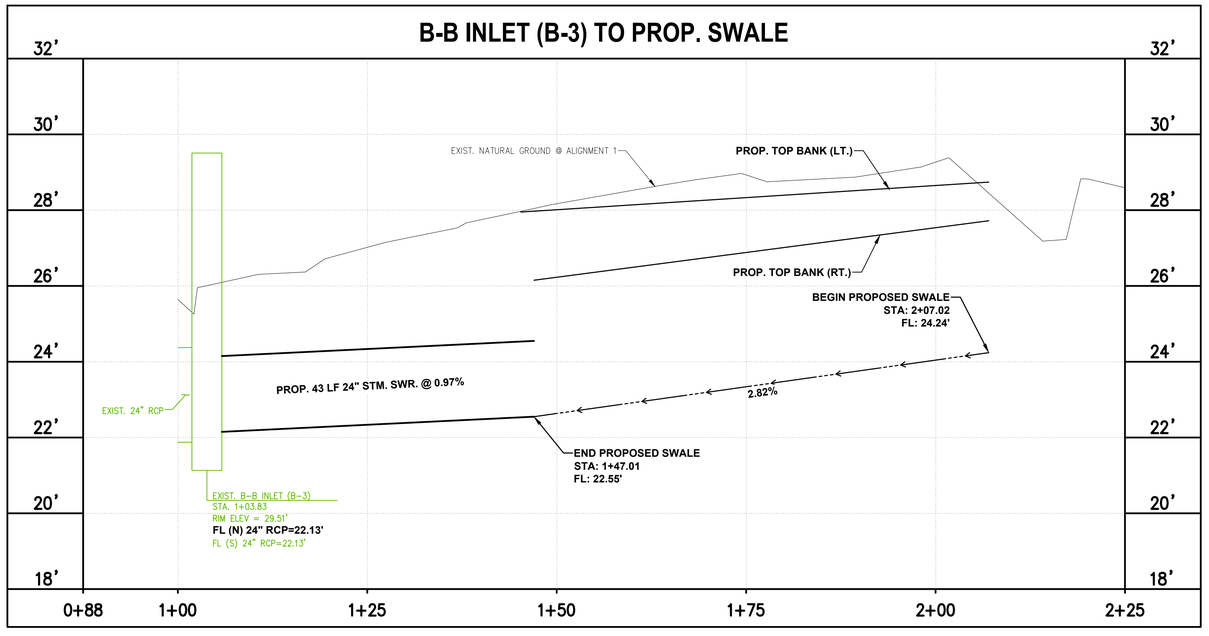

NO.	DATE	REVISION	APP.

IDS Engineering Group
13430 NW. Freeway, Suite 700
Houston, Tx. 77040
713.462.3178
TxEng Firm 2726 | TxSurv Firm 10110700

SURVEYED BY: KUO & ASSOCIATES, INC.
TBPE FIRM #F-4578; TBPLS FIRM #1007560

THIS DOCUMENT IS RELEASED FOR THE PURPOSE OF REVIEW UNDER THE AUTHORITY OF MARCEL KHOUW, P.E. 101807 ON 05/27/2026. IT IS NOT TO BE USED FOR CONSTRUCTION PURPOSES.

CITY OF HOUSTON
HOUSTON PUBLIC WORKS

LIFT STATION RENEWAL AND REPLACEMENT FY 2023

WOODFOREST LIFT STATION PLAN AND PROFILE (SHEET 1 OF 2)

WBS NUMBER	FOR CITY OF HOUSTON USE ONLY
R-000267-0179-4	
DRAWING SCALE	
HORIZ: 1" = 10' VERT: 1" = 2'	
CITY OF HOUSTON PM	
NAWARAJ PANTA, P.E.	

DWG. NO.	SHEET NO.
WDF-C-06	262 OF 361

FILE PATH: \\idseg.com\FS\Projects\0000\005708500 CoH Lift Stations - FY 2023\CAD\DWG\PRODUCTION\262-WOODFOREST PLAN AND PROFILE.dwg

PLOTTED: 5/13/2026 6:45 PM

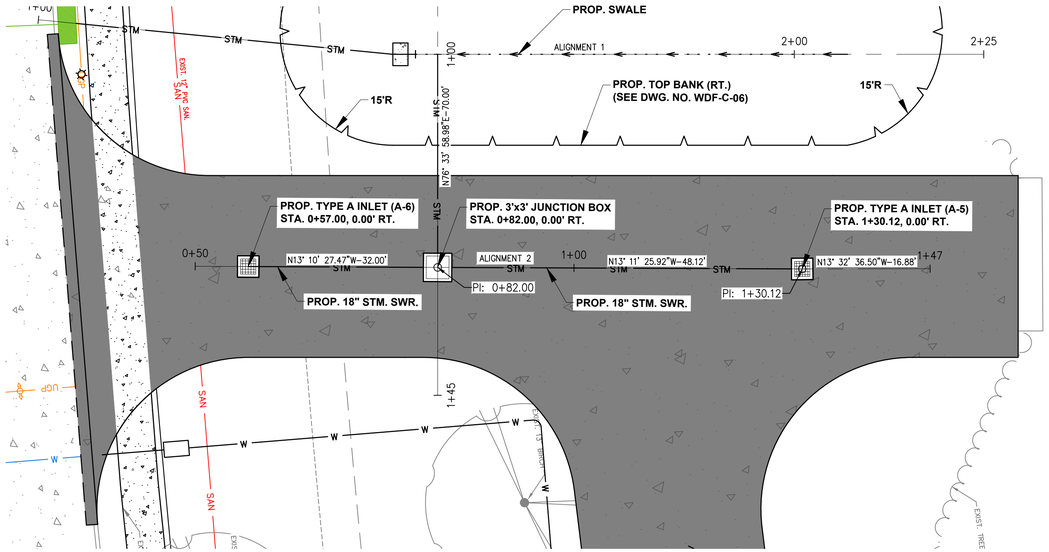

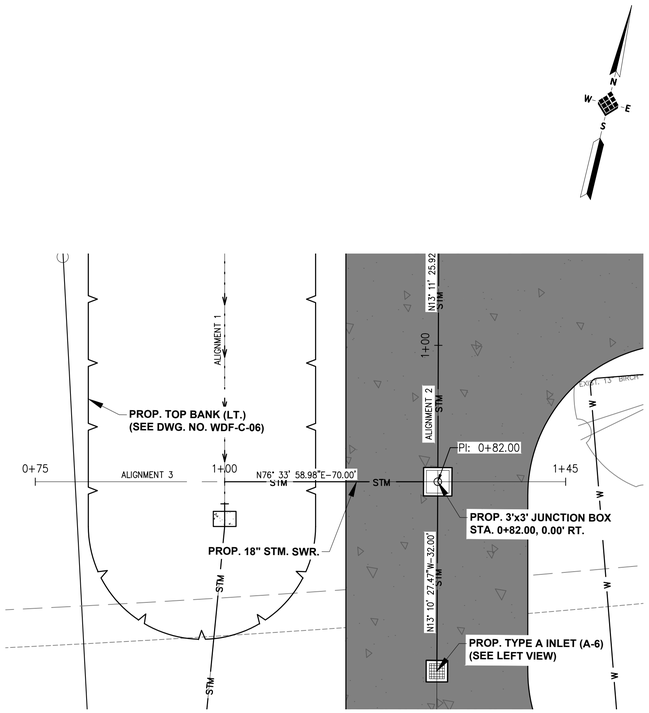

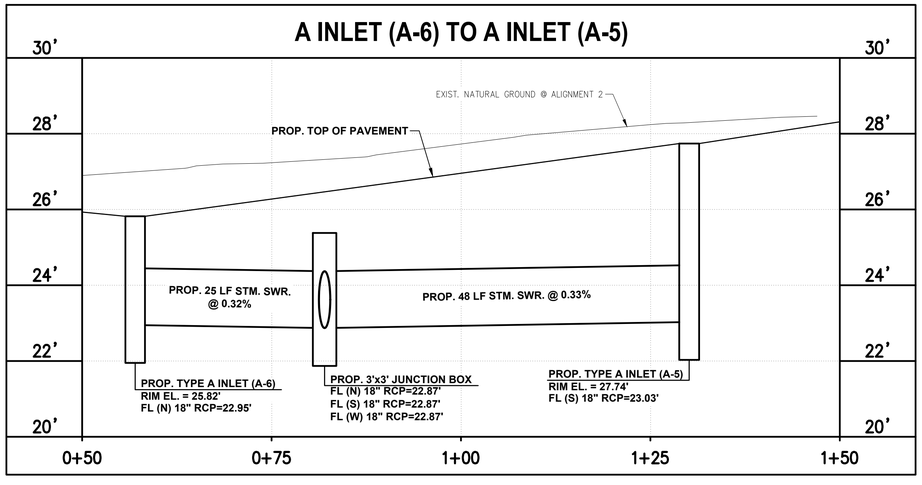

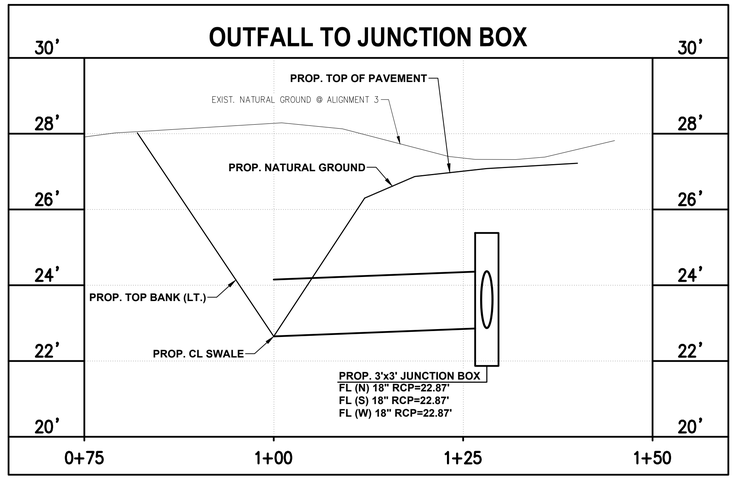

NO.	DATE	REVISION	APP.

IDS Engineering Group
13430 NW. Freeway, Suite 700
Houston, Tx. 77040
713.462.3178
TxEng Firm 2726 | TxSurv Firm 10110700

SURVEYED BY: KUO & ASSOCIATES, INC.
TBPE FIRM #F-4578; TBPLS FIRM #1007560

THIS DOCUMENT IS RELEASED FOR THE PURPOSE OF REVIEW UNDER THE AUTHORITY OF MARCEL KHOUW, P.E. 101807 ON 05/27/2026. IT IS NOT TO BE USED FOR CONSTRUCTION PURPOSES.

CITY OF HOUSTON
HOUSTON PUBLIC WORKS

LIFT STATION RENEWAL AND REPLACEMENT FY 2023

WOODFOREST LIFT STATION PLAN AND PROFILE (SHEET 2 OF 2)

WBS NUMBER	FOR CITY OF HOUSTON USE ONLY
R-000267-0179-4	
DRAWING SCALE	
HORIZ: 1" = 10' VERT: 1" = 2'	
CITY OF HOUSTON PM	
NAWARAJ PANTA, P.E.	

DWG. NO.	SHEET NO. 262 OF 361
WDF-C-06	

FILE PATH: \\idseg.com\FS\Projects\0000\005708500 CoH Lift Stations - FY 2023\CAD\DWG\PRODUCTION\263-WOODFOREST PLAN AND PROFILE.dwg

PLOTTED: 5/13/2026 6:45 PM

STORM SEWER CALCULATIONS

IDS ENGINEERING GROUP

CLIENT NAME: **CITY OF HOUSTON**
PROJECT NAME: **WBS NO. R-000267-0179-3 - WOODFOREST LIFT STATION**
IDS JOB NO: **0057-085-00**
DATE PRINTED: May 12, 2026
DATE REVISED: May 12, 2026 BY: CM

SELECT STORM EVENT FREQUENCY: 2 year
SELECT APPROPRIATE LAND USE: Light Industrial
ENTER DESIGN CURB HEIGHT (inches): 0

Re-Generate Formulas

Line	Manhole or Inlet Number U / S	D / S	Reach Length (feet)	Diameter or Rise (inches)	Span (inches)	No. of Barrels	Pipe Material	Pipe Grade Minimum (%)	Pipe Grade Actual (%)	Area (acres)	Sum of Area (acres)	Runoff Coeff.	Sum of C x Area (acres)	Travel Time (minutes)	Time of Concentration (minutes)	Intensity (in./hr.)	Sum of Flows (cfs)	Design Flow (cfs)	Design Velocity (fps)	Actual Velocity (fps)	Hydraulic Gradient (%)	Change in Head (feet)	Upstream Top of Grate (feet)	Hydraulic Grade Upstream (feet)	Hydraulic Grade Downstream (feet)	Manhole Drop (D/S) (feet)	Pipe Flowline Upstream (feet)	Pipe Flowline Downstream (feet)	Depth from Gutter to HGL (feet)	Depth of Cover (feet)	Upstream NG Elev. (feet)	Depth from NG to HGL (feet)
1	A-1	J-1	25.00	18		1	RCP	0.260%	0.320%	0.17	0.17	0.65	0.11	1.67	22.3	3.98	0.44	5.94	3.36	0.25	0.002%	0.00	25.82	24.37	24.37		***22.95***	22.87	1.45	1.37		-24.37
2	A-2	J-1	48.00	18		1	RCP	0.260%	0.333%	0.02	0.02	0.65	0.01	25.84	20.0	4.21	0.05	6.06	3.43	0.03	0.000%	0.00	27.74	24.37	24.37		***23.03***	***22.87***	3.37	3.21		-24.37
3	J-1	SWALE	28.00	18		1	RCP	0.260%	0.607%	0.19	0.19	0.65	0.12	1.68	22.5	3.97	0.49	8.18	4.63	0.28	0.002%	0.00	25.82	24.20	24.20		***22.87***	***22.70***	1.62	1.45		-24.20
4	SWALE	***OUT***	42.00	24		1	RCP	0.180%	1.000%	0.19	0.19	0.65	0.12	4.49	22.5	3.97	0.49	22.62	7.20	0.16	0.000%	0.00	27.74	24.13	24.13		***22.55***	***22.13***	3.61	3.19		-24.13

NOTES:
1. This spreadsheet has been developed using the City of Houston criteria outlined in the November 2023 Infrastructure Design Manual. The Rational Method has been used to calculate flows, and Manning's Formula for pipes flowing full has been used to calculate velocities.
2. This spreadsheet calculates rainfall intensity using the b, d, and e constants for Harris County and the City of Houston, as outlined in Appendix H of the Harris County Infrastructure Regulations, and Chapter 9 of the November 2023 City of Houston Infrastructure Design Manual.
3. Minimum storm sewer grades and maximum velocities as established in the City of Houston design criteria have been used to establish the grades used in this system.
4. Land Use "SFR" represents Single-Family Residential development. Land Use "MFR" represents Multi-Family Residential development.
5. Design flow and velocity are based entirely on pipe grade and represent the condition when pipe is flowing full with the hydraulic grade line equal to the pipe grade, and are used to demonstrate that the pipe slopes used in the calculations conform to the City of Houston minimum and maximum standards.

Runoff Coefficient Table	
Land Use	C
SFR (> ½ ac. lots)	0.35
SFR (¼ - ½ ac. lots)	0.45
SFR (< ¼ ac. lots)	0.55
MFR (< 20 d.u./ac.)	0.65
MFR (>= 20 d.u./ac.)	0.80
Business Districts	0.80
Light Industrial	0.65
Heavy Industrial	0.75
Railroad Yard Areas	0.30
Parks/Open Areas	0.18
Land Use Varies	ENTER

Pipe Material	Mannings "n" Value	Pipe Description
CLAY	0.012	Extra Strength Vitrified Clay Pipe
CMP	0.024	Corrugated Metal Pipe
CMPSI	0.013	CMP w/ Smooth Interior
HDPE	0.013	High Density Polyethylene Pipe
PVC	0.013	Polyvinyl Chloride Pipe
RCA	0.013	Reinforced Concrete Arch Pipe
RCB	0.015	Reinforced Concrete Box Culvert
RCE	0.013	Reinforced Concrete Elliptical Pipe
RCP	0.013	Reinforced Concrete Pipe

Rainfall Freq. (yrs)	b	d	e
2 year	***48.35***	***9.07***	***0.7244***
5 year	52.32	7.88	0.6900
10 year	54.68	6.96	0.6623
25 year	57.79	5.89	0.6294
50 year	61.00	5.46	0.6096
100 year	60.66	4.44	0.5797
500 year	62.17	2.95	0.5196

Master Spreadsheet - Storm Sewer Calculations Updated 02/10/2025
\\idseg.com\FS\Projects\0000\005708500 CoH Lift Stations - FY 2023\Eng\Calcs\Drainage\[6. Woodforest Drainage Calcs.xlsx]CALCULATIONS

STORM SEWER CALCULATIONS

IDS ENGINEERING GROUP

CLIENT NAME: **CITY OF HOUSTON**
PROJECT NAME: **WBS NO. R-000267-0179-3 - WOODFOREST LIFT STATION**
IDS JOB NO: **0057-085-00**
DATE PRINTED: May 12, 2026
DATE REVISED: May 12, 2026 BY: CM

SELECT STORM EVENT FREQUENCY: 100 year
SELECT APPROPRIATE LAND USE: Light Industrial
ENTER DESIGN CURB HEIGHT (inches): 0

Re-Generate Formulas

Line	Manhole or Inlet Number U / S	D / S	Reach Length (feet)	Diameter or Rise (inches)	Span (inches)	No. of Barrels	Pipe Material	Pipe Grade Minimum (%)	Pipe Grade Actual (%)	Area (acres)	Sum of Area (acres)	Runoff Coeff.	Sum of C x Area (acres)	Travel Time (minutes)	Time of Concentration (minutes)	Intensity (in./hr.)	Sum of Flows (cfs)	Design Flow (cfs)	Design Velocity (fps)	Actual Velocity (fps)	Hydraulic Gradient (%)	Change in Head (feet)	Upstream Top of Grate (feet)	Hydraulic Grade Upstream (feet)	Hydraulic Grade Downstream (feet)	Manhole Drop (D/S) (feet)	Pipe Flowline Upstream (feet)	Pipe Flowline Downstream (feet)	Depth from Gutter to HGL (feet)	Depth of Cover (feet)	Upstream NG Elev. (feet)	Depth from NG to HGL (feet)
1	A-1	J-1	25.00	18		1	RCP	0.260%	0.320%	0.17	0.17	0.65	0.11	0.74	22.3	9.02	1.00	5.94	3.36	0.56	0.009%	0.00	25.82	24.37	24.37		***22.95***	22.87	1.45	1.37		-24.37
2	A-2	J-1	48.00	18		1	RCP	0.260%	0.333%	0.02	0.02	0.65	0.01	11.44	20.0	9.51	0.12	6.06	3.43	0.07	0.000%	0.00	27.74	24.37	24.37		***23.03***	***22.87***	3.37	3.21		-24.37
3	J-1	SWALE	28.00	18		1	RCP	0.260%	0.607%	0.19	0.19	0.65	0.12	0.74	22.5	9.00	1.11	8.18	4.63	0.63	0.011%	0.00	25.82	24.20	24.20		***22.87***	***22.70***	1.62	1.45		-24.20
4	SWALE	***OUT***	42.00	24		1	RCP	0.180%	1.000%	0.19	0.19	0.65	0.12	1.98	22.5	9.00	1.11	22.62	7.20	0.35	0.002%	0.00	27.74	24.13	24.13		***22.55***	***22.13***	3.61	3.19		-24.13

NOTES:
1. This spreadsheet has been developed using the City of Houston criteria outlined in the November 2023 Infrastructure Design Manual. The Rational Method has been used to calculate flows, and Manning's Formula for pipes flowing full has been used to calculate velocities.
2. This spreadsheet calculates rainfall intensity using the b, d, and e constants for Harris County and the City of Houston, as outlined in Appendix H of the Harris County Infrastructure Regulations, and Chapter 9 of the November 2023 City of Houston Infrastructure Design Manual.
3. Minimum storm sewer grades and maximum velocities as established in the City of Houston design criteria have been used to establish the grades used in this system.
4. Land Use "SFR" represents Single-Family Residential development. Land Use "MFR" represents Multi-Family Residential development.
5. Design flow and velocity are based entirely on pipe grade and represent the condition when pipe is flowing full with the hydraulic grade line equal to the pipe grade, and are used to demonstrate that the pipe slopes used in the calculations conform to the City of Houston minimum and maximum standards.

Runoff Coefficient Table	
Land Use	C
SFR (> ½ ac. lots)	0.35
SFR (¼ - ½ ac. lots)	0.45
SFR (< ¼ ac. lots)	0.55
MFR (< 20 d.u./ac.)	0.65
MFR (>= 20 d.u./ac.)	0.80
Business Districts	0.80
Light Industrial	0.65
Heavy Industrial	0.75
Railroad Yard Areas	0.30
Parks/Open Areas	0.18
Land Use Varies	ENTER

Pipe Material	Mannings "n" Value	Pipe Description
CLAY	0.012	Extra Strength Vitrified Clay Pipe
CMP	0.024	Corrugated Metal Pipe
CMPSI	0.013	CMP w/ Smooth Interior
HDPE	0.013	High Density Polyethylene Pipe
PVC	0.013	Polyvinyl Chloride Pipe
RCA	0.013	Reinforced Concrete Arch Pipe
RCB	0.015	Reinforced Concrete Box Culvert
RCE	0.013	Reinforced Concrete Elliptical Pipe
RCP	0.013	Reinforced Concrete Pipe

Rainfall Freq. (yrs)	b	d	e
2 year	48.35	9.07	0.7244
5 year	52.32	7.88	0.6900
10 year	54.68	6.96	0.6623
25 year	57.79	5.89	0.6294
50 year	61.00	5.46	0.6096
100 year	***60.66***	***4.44***	***0.5797***
500 year	62.17	2.95	0.5196

Master Spreadsheet - Storm Sewer Calculations Updated 02/10/2025
\\idseg.com\FS\Projects\0000\005708500 CoH Lift Stations - FY 2023\Eng\Calcs\Drainage\[6. Woodforest Drainage Calcs.xlsx]CALCULATIONS

NO.	DATE	REVISION	APP.

IDS Engineering Group
13430 NW. Freeway, Suite 700
Houston, Tx. 77040
713.462.3178
TxEng Firm 2726 | TxSurv Firm 10110700

SURVEYED BY: KUO & ASSOCIATES, INC.
TBPE FIRM #F-4578; TBPLS FIRM #1007560

THIS DOCUMENT IS RELEASED FOR THE PURPOSE OF REVIEW UNDER THE AUTHORITY OF MARCEL KHOUW, P.E. 101807 ON 05/27/2026. IT IS NOT TO BE USED FOR CONSTRUCTION PURPOSES.

CITY OF HOUSTON
HOUSTON PUBLIC WORKS

LIFT STATION RENEWAL AND REPLACEMENT FY 2023

WOODFOREST LIFT STATION DRAINAGE CALCULATIONS

WBS NUMBER	FOR CITY OF HOUSTON USE ONLY
R-000267-0179-4	
DRAWING SCALE	
HORIZ: N/A VERT: N/A	
CITY OF HOUSTON PM	
NAWARAJ PANTA, P.E.	
DWG. NO. WDF-C-08	SHEET NO. 264 OF 361

FILE PATH: \\idseg.com\FS\Projects\0000\005708500 CoH Lift Stations - FY 2023\CAD\DWG\PRODUCTION\264-WOODFOREST CALCULATIONS.dwg

PLOTTED: 5/13/2026 6:45 PM

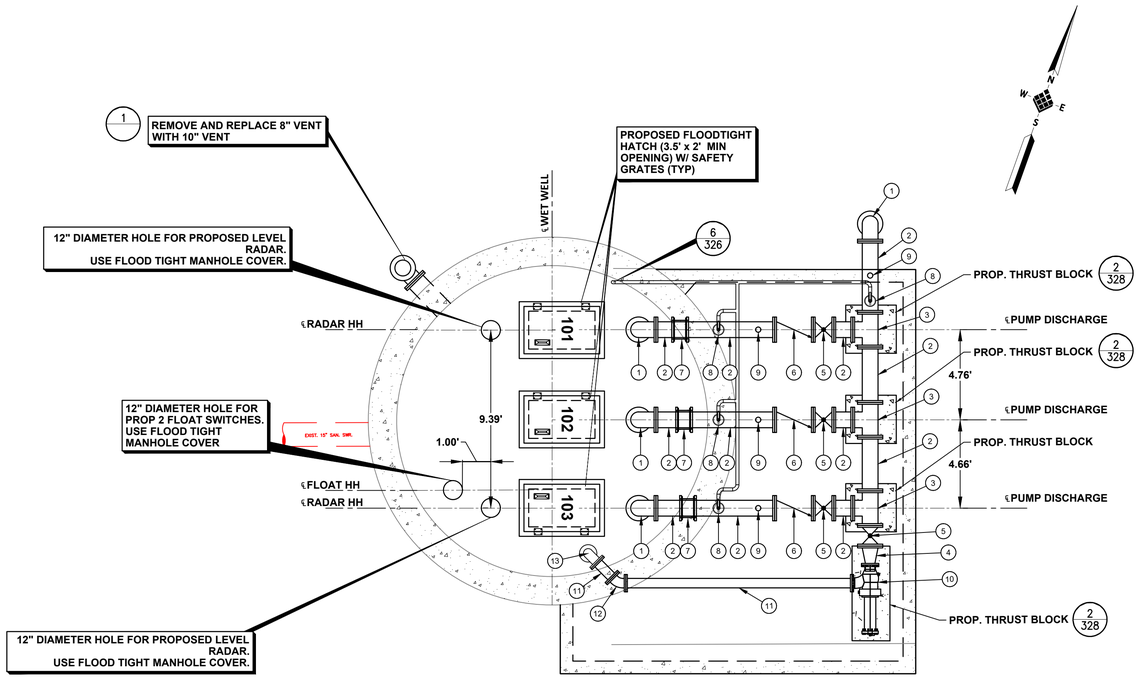

PLAN VIEW AT GRADE
SCALE: 1"=4'

ITEMS TO BE REMOVED & REPLACED		
KEYED NOTES	ITEM	QTY
1	90° BEND (10")	4
2	SPOOL PIECE (10")	12
3	TEE (10" x 10")	2
4	REDUCER (10" x 6")	1
5	PLUG VALVE (10")	3
6	CHECK VALVE (10")	3
7	FLEXIBLE COUPLING (10")	3
8	2" AIR RELEASE & VACUUM VALVE ASSEMBLY	4
9	PRESSURE GAUGE ASSEMBLY	3
10	APCO SRA-3000A SURGE RELIEF VALVE (6") SET TO OPEN AT 65 PSI	1
11	SPOOL PIECE (6")	2
12	45° BEND (6")	1
13	90° BEND (6")	1

NOTES:

1. ABRASIVE BLAST AND COAT ALL PIPING AND FITTINGS NOT BEING REPLACED IN WET WELL.
2. CONTRACTOR TO VERIFY DIMENSIONS REQUIRED TO INSTALL AND OPERATE VALVES.
3. EXISTING LIFT STATION WET WELL STRUCTURE TO REMAIN.
4. UV PROTECTIVE COATINGS ARE REQUIRED BY THE CITY OF HOUSTON ON ALL VENT PIPES.
5. LABEL HATCHES WITH THE CORRESPONDING PUMP NUMBER USING A 12–INCH BY 6–INCH ALUMINUM PLATE ENGRAVED WITH 1.5–INCH LETTERING WELDED TO THE HATCH.
6. CONTRACTOR TO CONFIRM SIZE AND LOCATION OF THE WET WELL HATCHES PER HATCH AND PUMP MANUFACTURER REQUIREMENTS.
7. PUMP AND ANCHOR BOLTS ARE TO BE ADHESIVE TYPE, AND EMBEDDED IN THE CONCRETE SLAB. CONTRACTOR TO SUBMIT DESIGN OF PUMP ANCHOR BOLTS AND PATTERN, INCLUDING CALCULATIONS, CURING SHOP DRAWING SUBMISSION.
8. ALL PIPING IN THE WET WELL SHALL BE FLANGED. NO FLANGED COUPLING ADAPTORS, OR VICTAULIC STYLE COUPLINGS SHALL BE PERMITTED INSIDE OF THE WET WELL.
9. ACCESS HATCHES SHALL BE ALUMINUM AND FOREST GREEN. SAFETY GRATING SHALL BE FURNISHED WITH SAFETY ORANGE POWDER COAT FINISH.
10. WET WELL TO BE COATED WITH PROTECTIVE COATING PER PROJECT SPECIFICATIONS, CONSULT WITH COH PROJECT MANAGER FOR APPROVED PRODUCTS. COATING SHALL COVER ALL CONCRETE SURFACES, AND SHALL EXTEND TO A MINIMUM OF 12" BELOW THE LOW WATER ELEVATION.

LEGEND

- X / X — DETAIL NO. / SHEET NO.
- EXISTING CONCRETE
- PROPOSED CONCRETE

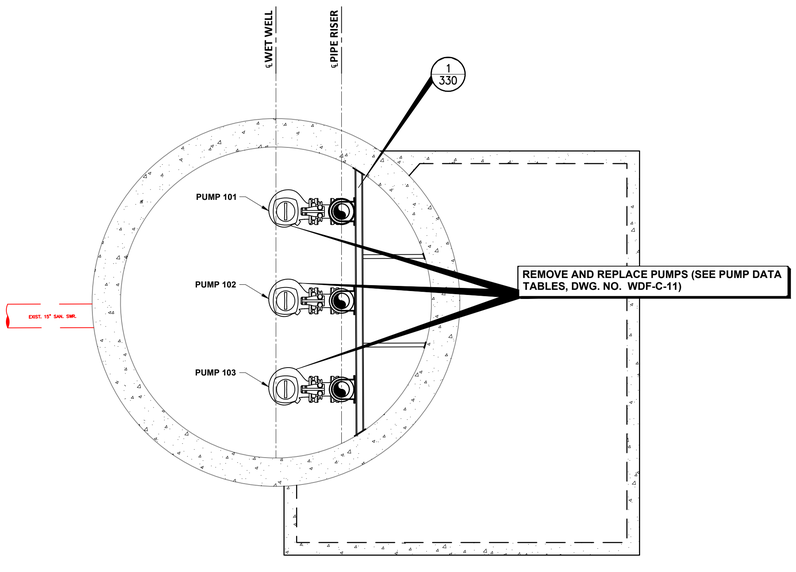

SECTION A-A VIEW A
SCALE: 1" = 4'

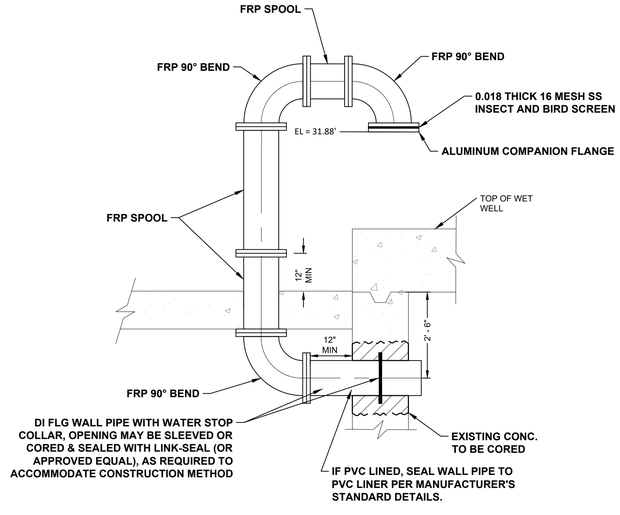

EXISTING STRUCTURE PENETRATION 1
SCALE: N.T.S.

NO.	DATE	REVISION	APP.

IDS Engineering Group
13430 NW. Freeway, Suite 700
Houston, Tx. 77040
713.462.3178
TxEng Firm 2726 | TxSurv Firm 10110700

SURVEYED BY: KUO & ASSOCIATES, INC.
TBPE FIRM #F-4578; TBPLS FIRM #1007560

THIS DOCUMENT IS RELEASED FOR THE PURPOSE OF REVIEW UNDER THE AUTHORITY OF MARCEL KHOUW, P.E. 101807 ON 05/27/2026. IT IS NOT TO BE USED FOR CONSTRUCTION PURPOSES.

CITY OF HOUSTON
HOUSTON PUBLIC WORKS

LIFT STATION RENEWAL AND REPLACEMENT FY 2023

WOODFOREST LIFT STATION PLAN AT GRADE AND BASE

WBS NUMBER	FOR CITY OF HOUSTON USE ONLY
R–000267–0179–4	
DRAWING SCALE	
HORIZ: VALUE VERT: VALUE	
CITY OF HOUSTON PM	
NAWARAJ PANTA, P.E.	
DWG. NO. WDF–C–09	SHEET NO. 265 OF 361

FILE PATH: \\idseg.com\FS\Projects\0000\005708500 CoH Lift Stations – FY 2023\CAD\DWG\PRODUCTION\265–WOODFOREST PLAN AT GRADE.dwg

PLOTTED: 5/14/2026 9:51 AM

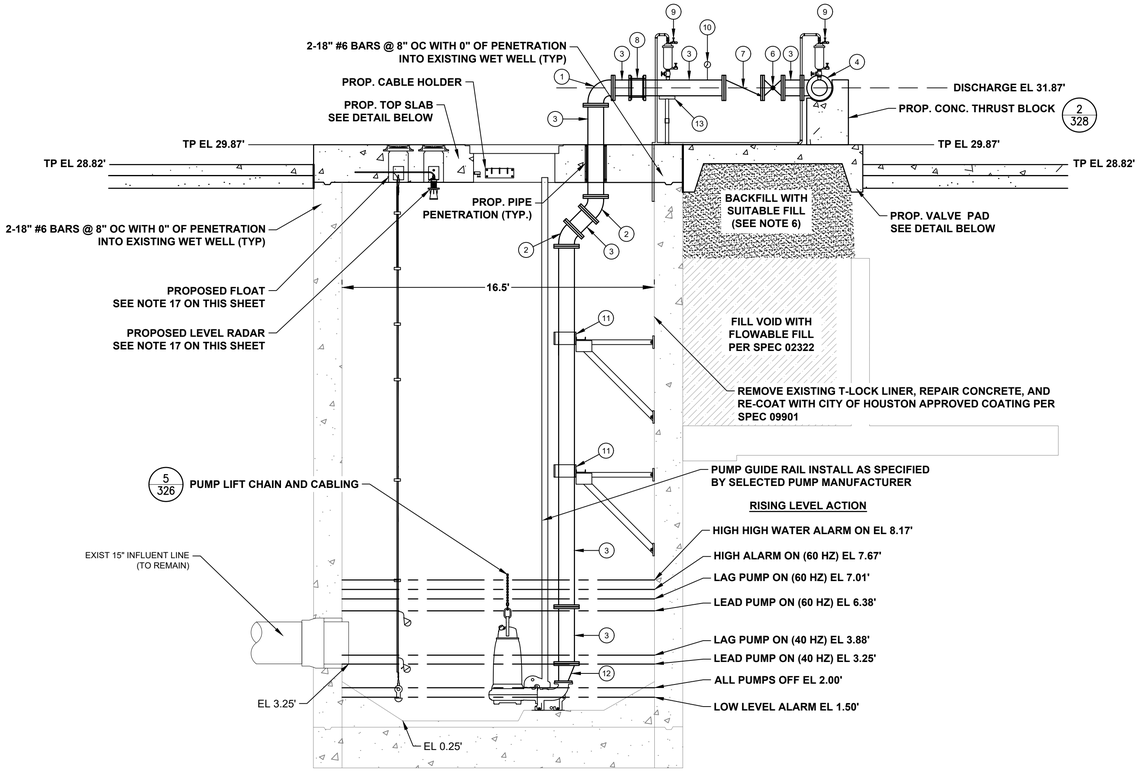

SECTIONAL ELEVATION A

SCALE: 1" = 4'

ITEMS TO BE REMOVED & REPLACED		
KEYED NOTES	ITEM	QTY
1	90° BEND (10")	1
2	45° BEND (10")	2
3	SPOOL PIECE (10")	7
4	TEE (10" x 10")	1
5	TEE (10" x 10") W/ BLIND FLANGE (10")	0
6	PLUG VALVE (10")	1
7	CHECK VALVE (10")	1
8	FLEXIBLE COUPLING (10")	1
9	2" AIR RELEASE & VACUUM VALVE ASSEMBLY	2
10	PRESSURE GAUGE ASSEMBLY	1
11	316 STAINLESS STEEL SUPPORTS	2
12	ECCENTRIC REDUCER (10" x 6")	1
13	ADJUSTABLE PIPE SUPPORT	3

NOTES:

1. ABRASIVE BLAST AND COAT ALL PIPING AND FITTINGS NOT BEING REPLACED IN WET WELL.
2. CONTRACTOR TO VERIFY DIMENSIONS REQUIRED TO INSTALL AND OPERATE VALVES.
3. EXISTING LIFT STATION WET WELL STRUCTURE TO REMAIN.
4. UV PROTECTIVE COATINGS ARE REQUIRED BY THE CITY OF HOUSTON ON ALL VENT PIPES.
5. LABEL HATCHES WITH THE CORRESPONDING PUMP NUMBER USING A 12–INCH BY 6–INCH ALUMINUM PLATE ENGRAVED WITH 1.5–INCH LETTERING WELDED TO THE HATCH.
6. FILL VOID LEFT BY REMOVAL OF EXISTING VALVE VAULT WITH SUITABLE FILL.
7. SEE ELECTRICAL PLANS FOR ADDITIONAL IMPROVEMENTS.
8. ABRASIVE BLAST AND COAT TO BE IN ACCORDANCE WITH SYSTEM 108 PER SPEC SECTION 09901 PART 2.03J.
9. FULL DROP PIPE CONFIGURATION NOT SHOWN FOR CLARITY.
10. PUMP ROTATION SHALL BE AS FOLLOWS: P6(STANDBY)–>P101, P105–>P102, P104–>P103, P103–>P104, P102–>P105, P101–>P106(STANDBY).
11. CONTRACTOR TO CONFIRM SIZE AND LOCATION OF THE WET WELL HATCHES PER HATCH AND PUMP MANUFACTURER REQUIREMENTS
12. PUMP AND ANCHOR BOLTS ARE THE BE ADHESIVE TYPE, AND EMBEDDED IN THE CONCRETE SLAB. CONTRACTOR TO SUBMIT DESIGN OF PUMP ANCHOR BOLTS AND PATTERN, INCLUDING CALCULATIONS, DURING SHOP DRAWINGS SUBMISSION.
13. ALL PIPING IN THE WET WELL SHALL BE FLANGED. NO FLANGED COUPLING ADAPTORS, OR VICTAULIC STYLE COUPLINGS SHALL BE PERMITTED INSIDE OF THE WET WELL.
14. ACCESS HATCHES SHALL BE FOREST GREEN. SAFETY GRATING SHALL BE FURNISHED WITH SAFETY ORANGE POWDER COAT FINISH.
15. INSTALL PLUG VALVES TO OPEN UPWARD AND TO CLOSE TO A SEATING POSITION.
16. INSTALL CHECK VALVES SO THAT THE WEIGHT LEVER POSITION IS APPROXIMATELY 45 DEGREES BELOW THE VALVE HORIZONTAL CENTER LINE IN THE CLOSE POSITION AND APPROXIMATELY 45 DEGREES ABOVE THE HORIZONTAL CENTER LINE IN THE FULL OPEN POSITION.
17. PROPOSED LEVEL RADARS AND FLOAT SHOWN FOR REFERENCE. REFER TO DWG. NO.'S WDF–C–09 AND WDF–E–07 FOR SIZE AND LOCATION.
18. CONTRACTOR TO SUBMIT A WET WELL TOP SLAB STRUCTURAL PLAN SIGN AND SEALED BY A REGISTERED ENGINEER IN THE STATE OF TEXAS.
19. WET WELL TO BE COATED WITH PROTECTIVE COATING PER PROJECT SPECIFICATIONS, CONSULT WITH COH PROJECT MANAGER FOR APPROVED PRODUCTS. COATING SHALL COVER ALL CONCRETE SURFACES, AND SHALL EXTEND TO A MINIMUM OF 12" BELOW THE LOW WATER ELEVATION.

LEGEND

- X/X — DETAIL NO. / SHEET NO.
- EXIST. CONCRETE
- PROP. CONCRETE
- PROP. SUITABLE FILL
- PROP. FLOWABLE FILL

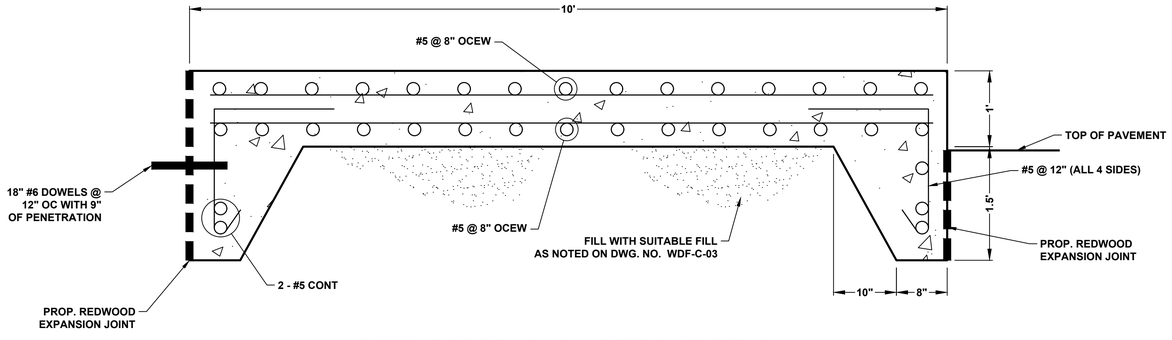

DISCHARGE PIPING CONCRETE SLAB DETAIL

SCALE: 1" = 1'

NO.	DATE	REVISION	APP.

IDS Engineering Group
13430 NW. Freeway, Suite 700
Houston, Tx. 77040
713.462.3178
TxEng Firm 2726 | TxSurv Firm 10110700

SURVEYED BY: KUO & ASSOCIATES, INC.
TBPE FIRM #F–4578; TBPLS FIRM #1007560

THIS DOCUMENT IS RELEASED FOR THE PURPOSE OF REVIEW UNDER THE AUTHORITY OF MARCEL KHOUW, P.E. 101807 ON 05/27/2026. IT IS NOT TO BE USED FOR CONSTRUCTION PURPOSES.

CITY OF HOUSTON
HOUSTON PUBLIC WORKS

LIFT STATION RENEWAL AND REPLACEMENT FY 2023

WOODFOREST LIFT STATION ELEVATION SECTION

WBS NUMBER	FOR CITY OF HOUSTON USE ONLY
R–000267–0179–4	
DRAWING SCALE	
HORIZ: AS NOTED VERT: N/A	
CITY OF HOUSTON PM	
NAWARAJ PANTA, P.E.	
SHEET NO. 266 OF 361	

DWG. NO. WDF–C–10

FILE PATH: \\idseg.com\FS\Projects\0000\005708500 CoH Lift Stations – FY 2023\CAD\DWG\PRODUCTION\266–WOODFOREST ELEV SECTION.dwg

PLOTTED: 5/13/2026 6:45 PM

ONE PUMP ON DESIGN POINT
784 GPM @ 43.08'

WOODFOREST LIFT STATION
REHABILITATION - FLYGT NP 3301 HT 3 ~ 468 (40 Hz)

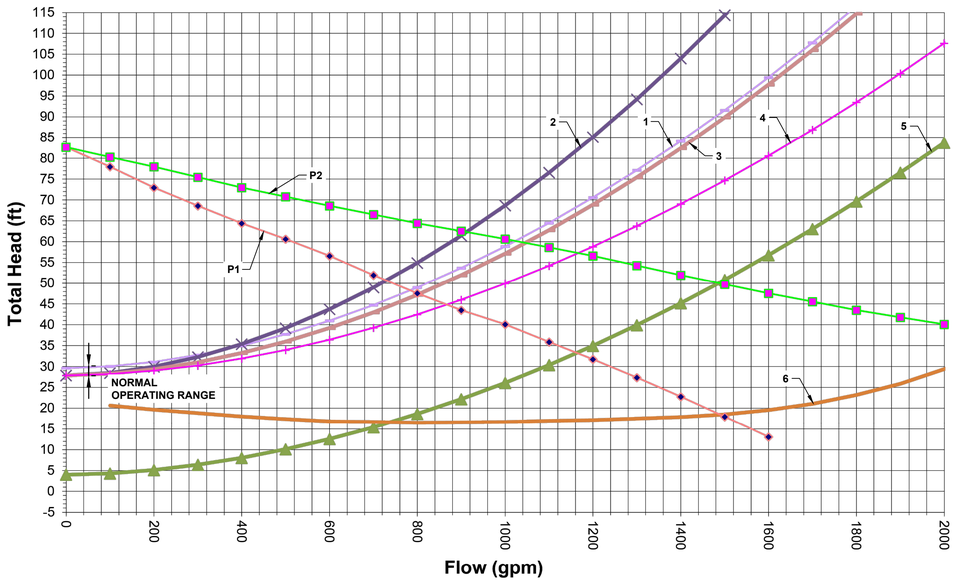

1. Low Normal Operation Level C=120 - Design
2. High Normal Operating Level C=100 - Information Only (TCEQ)
3. High Normal Operation Level C=120 - Design
4. High Normal Operating Level C=140 - Information Only
5. Emergency Flooded Operating Level C=140
6. NPSHR - 1 PUMP
0 Pub Curve w/Riser Losses ONE PUMP
0 Pub Curve w/Riser Losses TWO PUMPS

DESIGN POINT
1,951 GPM @ 117.83'

WOODFOREST LIFT STATION
REHABILITATION - FLYGT NP 3301 HT 3 ~ 468 (60 Hz)

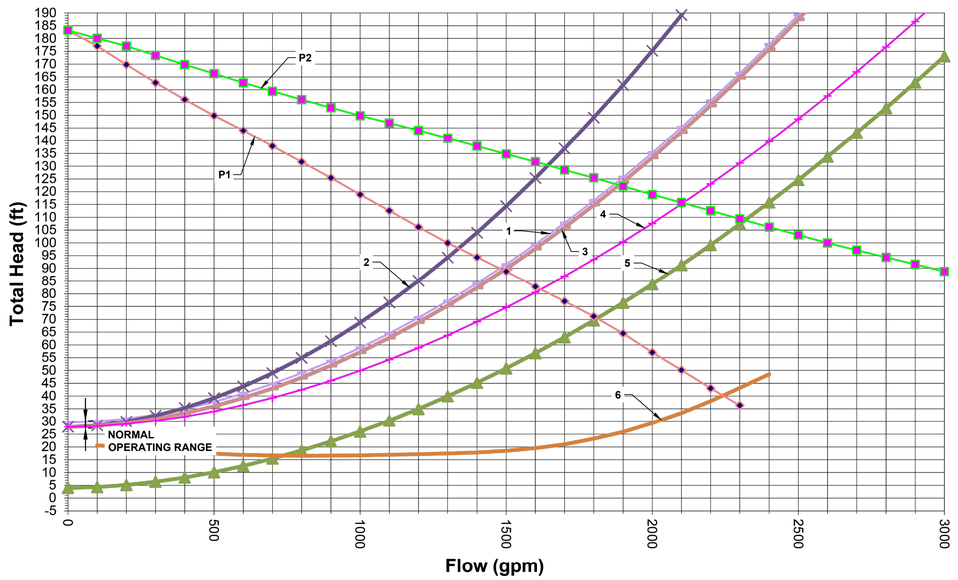

1. Low Normal Operation Level C=120 - Design
2. High Normal Operating Level C=100 - Information Only (TCEQ)
3. High Normal Operation Level C=120 - Design
4. High Normal Operating Level C=140 - Information Only
5. Emergency Flooded Operating Level C=140
6. NPSHR - 1 PUMP
0 Pub Curve w/Riser Losses ONE PUMP
0 Pub Curve w/Riser Losses TWO PUMPS

STATION OPERATING TABLES

PROPOSED CONDITION - 2.81 MGD

RISING WATER LEVEL

WATER LEVEL ELEVATION	ACTION	PUMP(S) IN OPERATION
2.00	PUMPS OFF LEVEL - NO ACTION	ALL PUMPS OFF
3.25	LEAD PUMP (40 HZ) TURNS ON	LEAD PUMP (40 HZ) ON
3.88	LAG PUMP (40 HZ) TURNS ON	LEAD AND LAG PUMP (40 HZ) ON
6.38	LEAD PUMP (60 HZ) TURNS ON	LEAD (60 HZ) AND LAG PUMP (40 HZ) ON
7.01	LAG PUMP (60 HZ) TURNS ON	LEAD AND LAG PUMP (60 HZ) ON
7.67	HIGH WATER ALARM ON	HIGH WATER ALARM SOUND
8.17	HIGH HIGH WATER ALARM ON (FLOAT ON LEVEL)	FIRM PUMPS ON (FLOATS)

FALLING WATER LEVEL

WATER LEVEL ELEVATION	ACTION	PUMP(S) IN OPERATION
8.17	FLOAT OFF LEVEL	FIRM PUMPS OFF (FLOATS)
7.67	HIGH WATER LEVEL ALARM OFF	ALL PUMPS ON
6.38	LEAD PUMP (60 HZ) TURNS OFF	LEAD PUMP (40 HZ) AND LAG PUMP (60 HZ) ON
3.88	LAG PUMP (60 HZ) TURNS OFF	LEAD PUMP (40 HZ) AND LAG PUMP (40 HZ) ON
3.25	LEAD PUMP (40 HZ) TURNS OFF	LAG PUMP (40 HZ) ON
2.00	LAG PUMP (40 HZ) TURNS OFF	ALL PUMPS STOPPED - STANDBY PUMP SWITCHES TO LEAD PUMP
1.50	LOW LEVEL ALARM	-

PUMP DATA TABLE*

PUMP CHARACTERISTICS	PUMP NO. 1	PUMP NO. 2	PUMP NO. 3
MOTOR DATA			
NOMIMAL SIZE (HP)	85	85	85
MAX SPEED (RPM)	1775	1775	1775
SOLIDS PASSAGE			
MINIMUM SPHERE (IN)	3	3	3
CAPACITY (GPM)			
DESIGN	1500	1500	1500
RUNOUT	2300	2300	2300
DISCHARGE HEAD (FT)			
DESIGN	89.9	89.9	89.9
RUNOUT	36	36	36
SHUT OFF	183.0	183.0	183.0
EFFICIENCY (%)			
DESIGN	68.5	68.5	68.5
NPSHR (FT)			
DESIGN	19.0	19.0	19.0
RUNOUT	48.6	48.6	48.6
PUMP CYCLE TIME (MIN)	10.0	10.0	10.0
CUMALATIVE CAPACITY (GPM)	1,478	1,873	-

*FLYGT NP 3301 HT 3 ~ 468 with VFD's used for all pump calculations.

NO.	DATE	REVISION	APP.

IDS Engineering Group
13430 NW. Freeway, Suite 700
Houston, Tx. 77040
713.462.3178
TxEng Firm 2726 | TxSurv Firm 10110700

SURVEYED BY: KUO & ASSOCIATES, INC.
TBPE FIRM #F-4578; TBPLS FIRM #1007560

THIS DOCUMENT IS RELEASED FOR THE PURPOSE OF REVIEW UNDER THE AUTHORITY OF MARCEL KHOUW, P.E. 101807 ON 05/27/2026. IT IS NOT TO BE USED FOR CONSTRUCTION PURPOSES.

CITY OF HOUSTON
HOUSTON PUBLIC WORKS

LIFT STATION RENEWAL AND REPLACEMENT FY 2023

MECHANICAL LIFT STATION PUMP DATA TABLES

WBS NUMBER	FOR CITY OF HOUSTON USE ONLY
R-000267-0179-4	
DRAWING SCALE	
HORIZ: N/A VERT: N/A	
CITY OF HOUSTON PM	
NAWARAJ PANTA, P.E.	
SHEET NO. 267 OF 361	

DWG. NO.
WDF-C-11

FILE PATH: \\tdseg.com\FS\Projects\0000\005708500 CoH Lift Stations - FY 2023\CAD\DWG\PRODUCTION\267-WOODFOREST LS PUMP DATA.dwg

PLOTTED: 5/13/2026 6:45 PM

FILE PATH: \\idseg.com\FS\Projects\0000\005708500 CoH Lift Stations – FY 2023\CAD\DWG\PRODUCTION\268–WOODFOREST TOP SLAB DETAIL.dwg

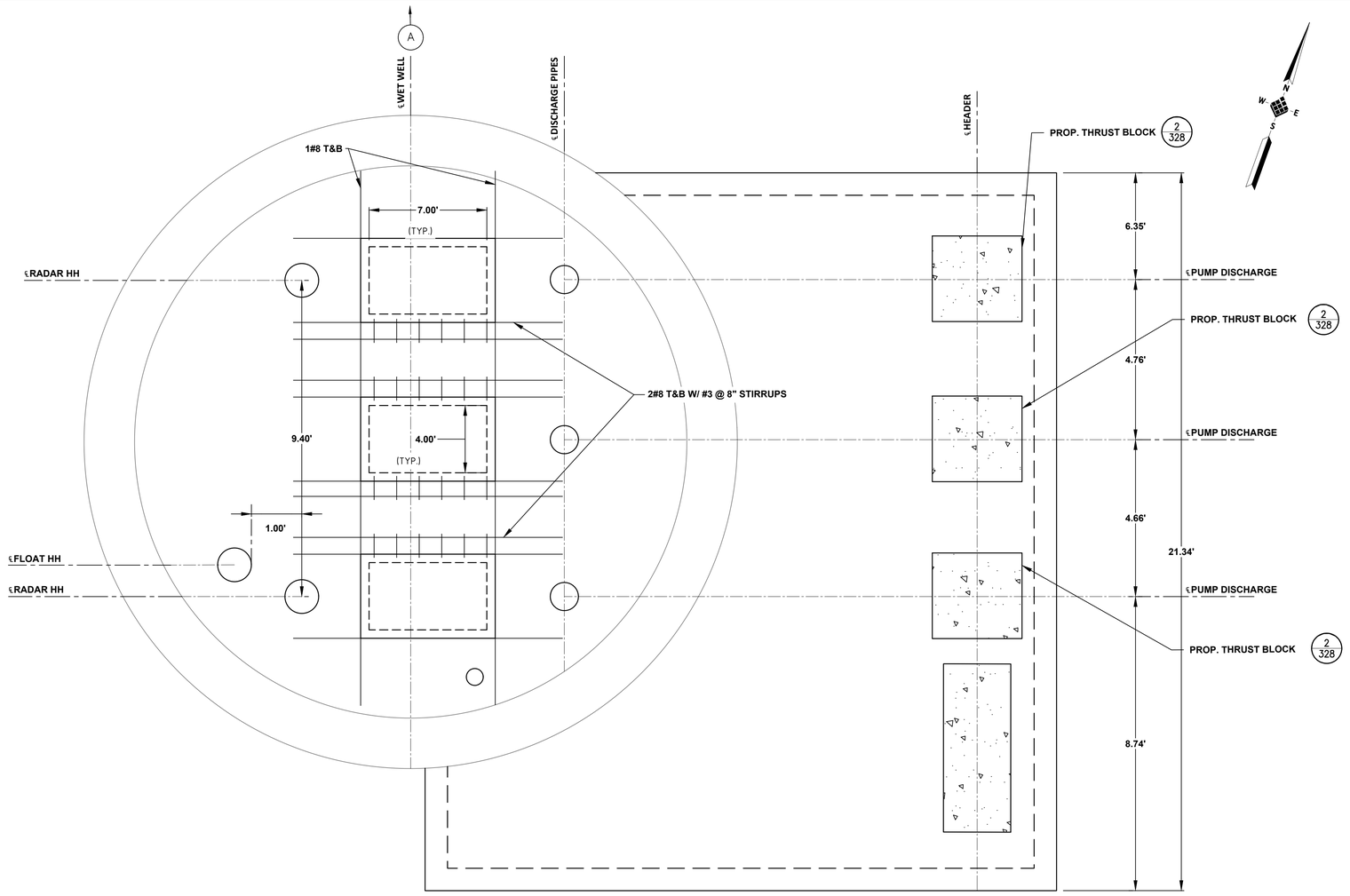

PLAN VIEW AT GRADE

SCALE: 1" = 2'

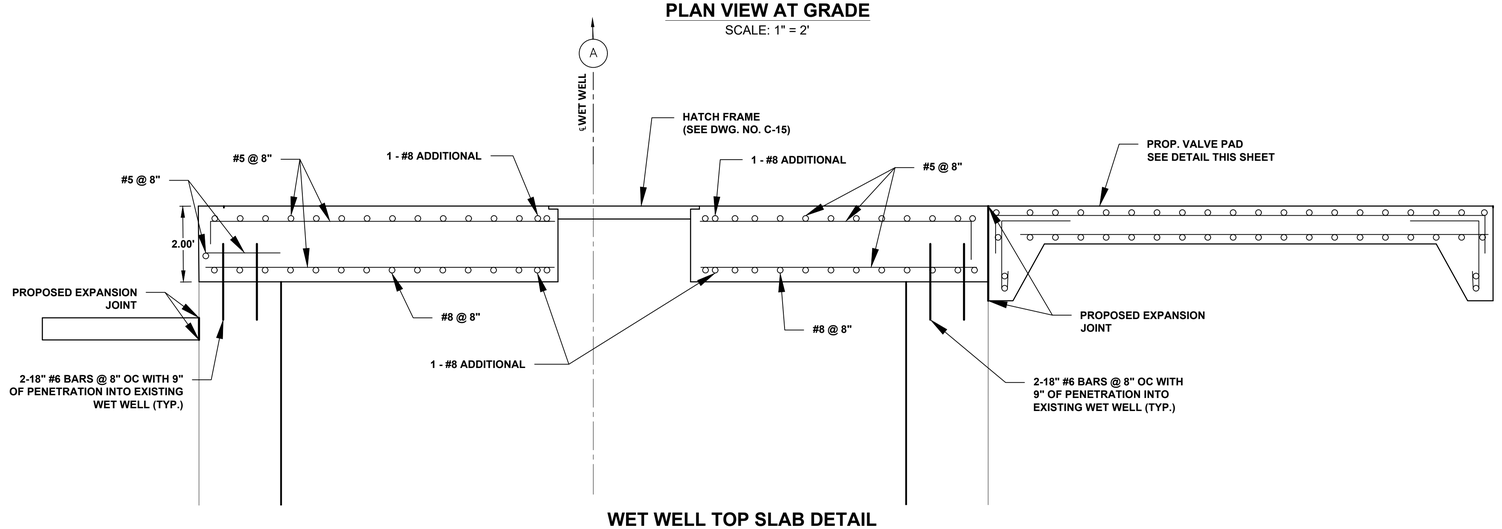

WET WELL TOP SLAB DETAIL

SCALE: 1" = 2' (SEE NOTE 2)

2' 0' 2'

SCALE

1" = 2'

NOTES:

1. CONTRACTOR TO CONFIRM SIZE AND LOCATION OF THE WET WELL HATCHES PER HATCH AND PUMP MANUFACTURER REQUIREMENTS
2. CONTRACTOR TO SUBMIT A WET WELL TOP SLAB STRUCTURAL PLAN SIGNED AND SEALED BY A REGISTERED ENGINEER IN THE STATE OF TEXAS.

NO.	DATE	REVISION	APP.

ITEMS TO BE REMOVED & REPLACED		
KEYED NOTES	ITEM	QTY
1	90° BEND (10")	4
2	SPOOL PIECE (10")	12
3	TEE (10" x 10")	2
4	REDUCER (10" x 6")	1
5	PLUG VALVE (10")	3
6	CHECK VALVE (10")	3
7	FLEXIBLE COUPLING (10")	3
8	2" AIR RELEASE & VACUUM VALVE ASSEMBLY	4
9	PRESSURE GAUGE ASSEMBLY	3
10	APCO SRA-3000A SURGE RELIEF VALVE (6") SET TO OPEN AT 65 PSI	1
11	SPOOL PIECE (6")	2
12	45° BEND (6")	1
13	90° BEND (6")	1

LEGEND

X/X DETAIL NO. / SHEET NO.

EXISTING CONCRETE

PROPOSED CONCRETE

IDS Engineering Group
13430 NW. Freeway, Suite 700
Houston, Tx. 77040
713.462.3178
TxEng Firm 2726 | TxSurv Firm 10110700

SURVEYED BY: KUO & ASSOCIATES, INC.
TBPE FIRM #F-4578; TBPLS FIRM #1007560

THIS DOCUMENT IS RELEASED FOR THE PURPOSE OF REVIEW UNDER THE AUTHORITY OF MARCEL KHOUW, P.E. 101807 ON 05/27/2026. IT IS NOT TO BE USED FOR CONSTRUCTION PURPOSES.

CITY OF HOUSTON
HOUSTON PUBLIC WORKS

LIFT STATION RENEWAL AND REPLACEMENT FY 2023

WOODFOREST LIFT STATION TOP SLAB DETAIL

WBS NUMBER	FOR CITY OF HOUSTON USE ONLY
R-000267-0179-4	
DRAWING SCALE	
HORIZ: 1" = 2' VERT: N/A	
CITY OF HOUSTON PM	
NAWARAJ PANTA, P.E.	

DWG. NO.	SHEET NO.
WDF-C-12	268 OF 361

PLOTTED: 5/13/2026 6:45 PM

FILE PATH: \\dseg.com\FS\Projects\0000\005708500 CoH Lift Stations - FY 2023\CAD\DWG\PRODUCTION\269-WOODFOREST PROP BLDG.dwg

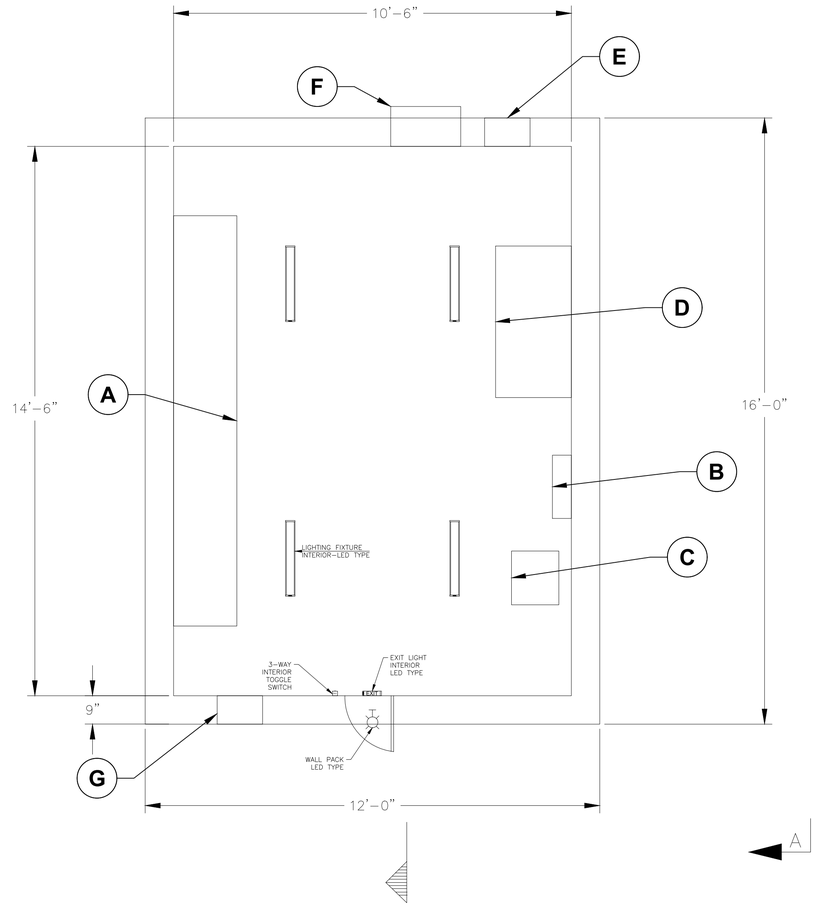

FLOOR PLAN

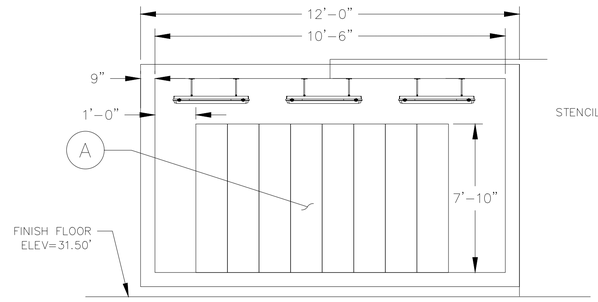

TYPICAL SECTION-1
SCALE: N.T.S.

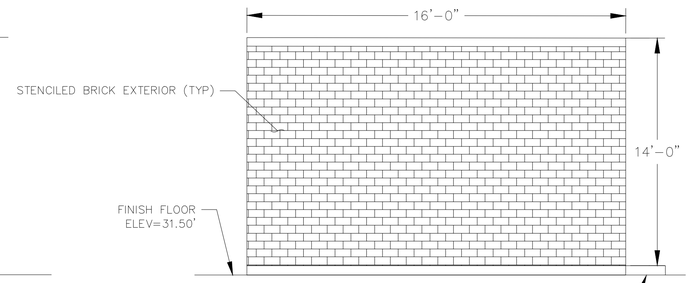

SIDE ELEVATION A
SCALE: N.T.S.

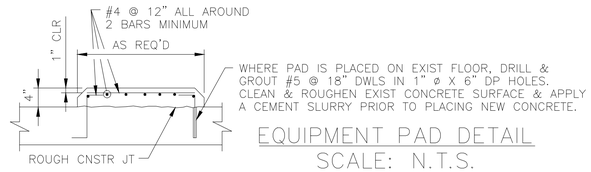

EQUIPMENT PAD DETAIL
SCALE: N.T.S.

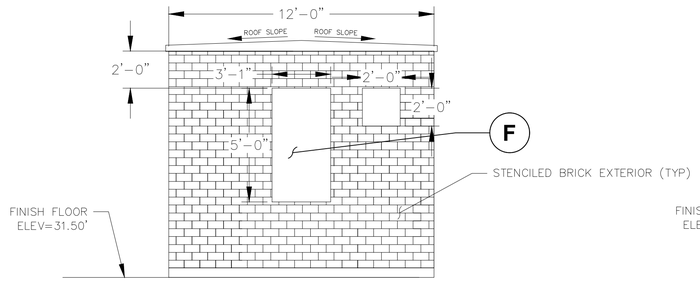

BACK ELEVATION B
SCALE: N.T.S.

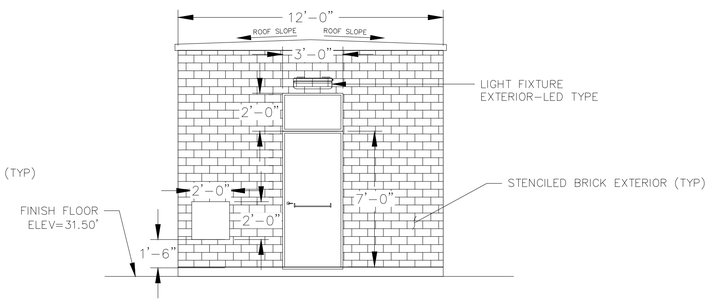

FRONT ELEVATION C
SCALE: N.T.S.

NOTES:

1. PROVIDE DEFERRED SUBMITTAL TO THE CITY OF HOUSTON CODE ENFORCEMENT FOR STRUCTURAL DESIGN OF PRECAST CONCRETE BUILDING.
2. THE CONTRACTOR SHALL SUBMIT FABRICATED DRAWINGS OF PRE-FABRICATED CONCRETE BUILDINGS AND CONCRETE FOUNDATIONS SIGNED AND SEALED BY A PROFESSIONAL ENGINEER IN THE STATE OF TEXAS AS SHOWN ON DRAWINGS FOR APPROVAL BY ENGINEER. PLATFORM MUST BE MANUFACTURED BY A CITY OF HOUSTON APPROVED FABRICATOR. A LIST OF APPROVED FABRICATORS CAN BE FOUND AT THE FOLLOWING LINK: https://www.houstonpermittingcenter.org/resources?keys=approved+fabricators
3. THE BUILDING IS GENERAL PURPOSE, NON-CLASSIFIED, NON-BLAST RATED.
4. ELECTRICAL CONDUITS INTO CONTROL BUILDING SHALL BE LOCATED AND POSITIONED PRIOR TO POURING BUILDING FOUNDATION OR IF PRECAST.
5. THE HVAC UNITS SHALL BE SIZED BASED ON HEAT LOSS CALCULATIONS. COORDINATE AC/HEAT PUMP OPENING SIZE WITH SELECTED MANUFACTURE'S RECOMMENDATIONS.
6. BUILDING DOOR SHALL BE OF 316 STAINLESS STEEL TYPE.
5. THE SINGLE ENTRANCE DOORS SHALL BE 36" (WIDE) X 84" (HEIGHT).
6. OPENINGS FOR BELTLESS FAN (24"X24") ON TOP OF WALL ELEVATION WITH 24"X24" LOUVER ON THE BOTTOM. BOTH UNITS SHALL BE PROVIDED WITH REMOVABLE COVERS FOR STANDBY USE.
7. FOR LIGHTING PLAN SEE DRAWING LCK-E-07.
8. WALL UNITS SHALL BE HEAVY-DUTY EXTERIOR WALL MOUNTED HEAT PUMP TYPE UNIT. WINDOW AC UNITS NOT ALLOWED.
9. CONTRACTOR SHALL VERIFY EQUIPMENT OPENING WITH THE SELECTED MANUFACTURER'S RECOMMENDATION.

EQUIPMENT IDENTIFICATION LIST		
ITEM	TAG NO.	DESCRIPTION
A		480V MCC
B		480 V - 240 / 120 V SINGLE PHASE POWER PANEL BOARD
C		480 V - 240 / 120 V SINGLE PHASE LIGHTING TRANSFORMER
D		CONTROL PANEL
E		EXHAUST FAN
F		WALL MOUNTED HVAC UNIT/ W SS BURGLAR BARS (NOTE J)
G		LOUVER

NO.	DATE	REVISION	APP.

IDS Engineering Group
13430 NW. Freeway, Suite 700
Houston, Tx. 77040
713.462.3178
TxEng Firm 2726 | TxSurv Firm 10110700

SURVEYED BY: KUO & ASSOCIATES, INC.
TBPE FIRM #F-4578; TBPLS FIRM #1007560

THIS DOCUMENT IS RELEASED FOR THE PURPOSE OF REVIEW UNDER THE AUTHORITY OF MARCEL KHOUW, P.E. 101807 ON 05/27/2026. IT IS NOT TO BE USED FOR CONSTRUCTION PURPOSES.

CITY OF HOUSTON
HOUSTON PUBLIC WORKS

LIFT STATION RENEWAL AND REPLACEMENT FY 2023

ARCHITECTURAL PRECAST CONCRRETE CONTROL BUILDING 4

WBS NUMBER	FOR CITY OF HOUSTON USE ONLY
R-000267-0179-4	
DRAWING SCALE	
HORIZ: N.T.S. VERT: N/A	
CITY OF HOUSTON PM	
NAWARAJ PANTA, P.E.	
SHEET NO. 269 OF 361	

DWG. NO. WDF-A-01

PLOTTED: 5/13/2026 6:45 PM

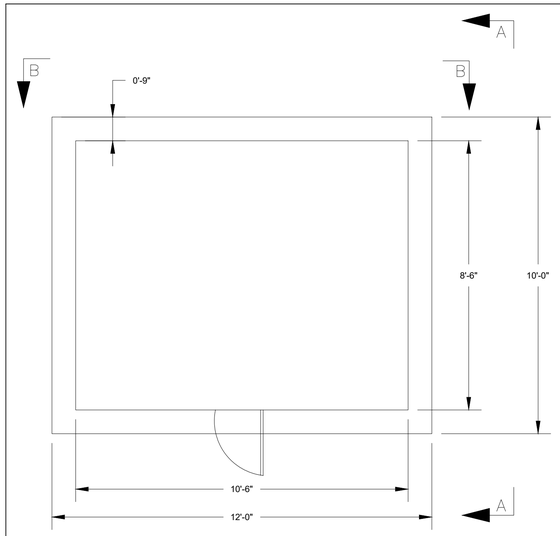

FLOOR PLAN
SCALE: N.T.S.

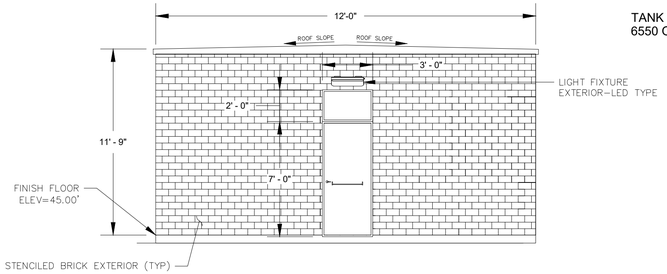

FRONT ELEVATION C
SCALE: N.T.S.

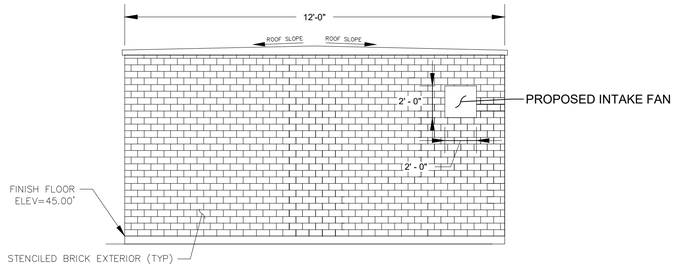

BACK ELEVATION B
SCALE: N.T.S.

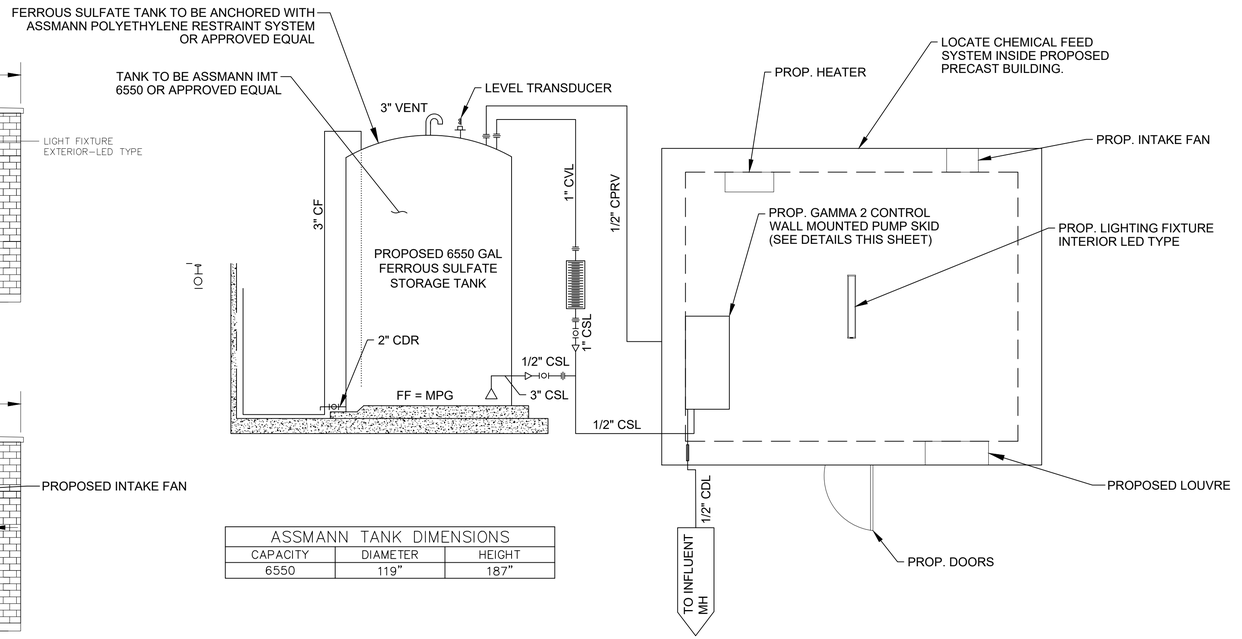

FERROUS SULFATE PROCESS FLOW SCHEMATIC

ASSMANN TANK DIMENSIONS		
CAPACITY	DIAMETER	HEIGHT
6550	119"	187"

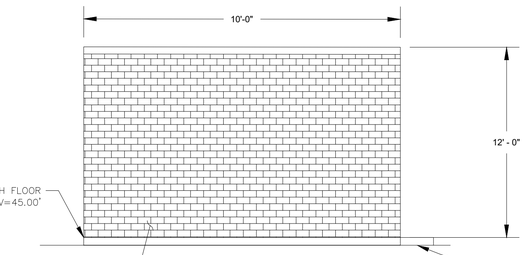

SIDE ELEVATION A
SCALE: NTS

APP.	REVISION	DATE	NO.

DWG No 3024800058-200 | REV 1

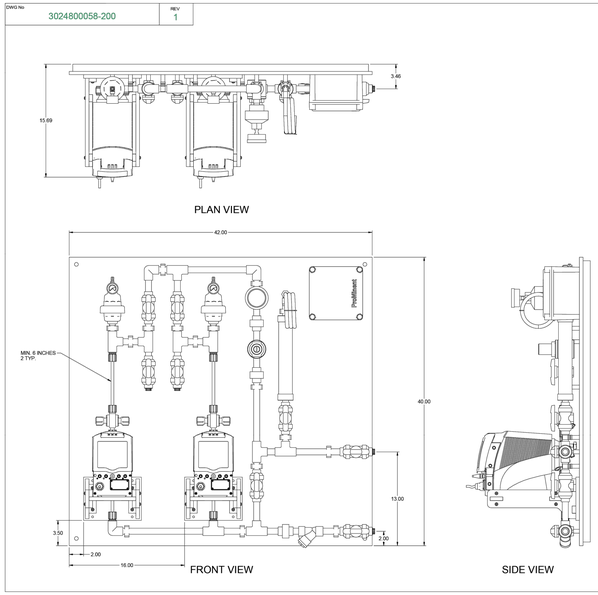

NOTES:

1. ALL PIPING AND FITTINGS SHALL BE 1/2" SCH. 80 PVC SOCKET WELD UNLESS OTHERWISE REQUIRED BY COMPONENTS.
2. SEAL MATERIAL IS VITON UNLESS OTHERWISE SPECIFIED.
3. ALL MOUNTING HARDWARE IS 316SS UNLESS SPECIFIED BY CUSTOMER.
4. ALL PIPING AND COMPONENTS SHALL BE SECURED AT BUILDERS DISCRETION AS SEEN FIT.
5. ALL INTERCONNECTING PIPING, HARDWARE, GASKETS, SEALS, AND WIRING ARE DONE ON SITE BY OTHERS.
6. TOLERANCE ON ALL TERMINATION POINTS ARE +/- 3/8" (10mm) UNLESS SPECIFIED BY OTHERS.
7. ALL BALL VALVES TO BE VENTED FOR VOLATILE FLUIDS.
8. ESTIMATED WEIGHT: 135 LBS
9. ITEMS TO SHIP LOOSE:
   - (2) PE TANK 250L, P/N 1023175
   - (2) INJECTION LANCE, P/N 1021528
   - (2) SPILL CONTAINMENT PALLET, ULTRATECH 2505

TESTING:

-HYDROSTATIC TEST PRESSURE: 150 PSIG
-DESIGN OPERATING PRESSURE: 145 PSIG
-DESIGN FLOW TEST PRESSURE: 145 PSIG

TESTING CONDITIONS:

-TEST TYPE: HYDROSTATIC
-TEST MEDIUM: WATER
-TEST TEMPERATURE: AMBIENT 68F (20C)
-TEST DURATION: 30 MIN. (MINIMUM)

CHEMICAL SERVICE:

-SODIUM HYPOCHLORITE

NETWORK NUMBERS:

-MECHANICAL: 1123412
-ELECTRICAL: N/A
-LOOSE SHIP: 1123420

REV	DATE	DESCRIPTION	BY	APPD	REVD
1	06/12/24	AS-BUILT	MRH		
0	05/07/24	RELEASE FOR PRODUCTION	MRH		
B	04/29/24	CUSTOMER COMMENTS	MRH		
A	02/29/24	FIRST ISSUE	MRH		

CUSTOMER

JOB No 3024800058 | PURCHASE ORDER No POAPE9452

TITLE P2_050_PVC/VITON_NaOCl_WALL GENERAL ARRANGEMENT

THIS DRAWING IS THE PROPERTY OF PROMINENT FLUID CONTROLS INC. AND SHALL NOT BE COPIED OR TRANSFERRED WITHOUT THE WRITTEN CONSENT OF PROMINENT FLUID CONTROLS INC.

ENGINEERS SEAL

ProMinent® THE PROMINENT GROUP OF COMPANIES

PITTSBURGH, PA USA: PROMINENT FLUID CONTROLS LTD., 490 SOUTHGATE DRIVE, GUELPH, ONTARIO, CANADA N1H 6J3, PHONE: 519 836 2492, FAX: 519 836 5226

WWW.PROMINENT.US: PROMINENT FLUID CONTROLS INC., RIDC PARK WEST, 136 INDUSTRY DRIVE, PITTSBURGH P.A., USA. 15275, PHONE: 412 787 2484, FAX: 412 787 2054

DESIGNED	TFG	APPROVED	T.G.
DRAWN	MRH	SCALE	N.T.S.
CHECKED	TFG	DATE	02/29/24

DWG No 3024800058-200 | REV 1 | PAGE 1/2

DWG No 3024800058-200 | REV 1

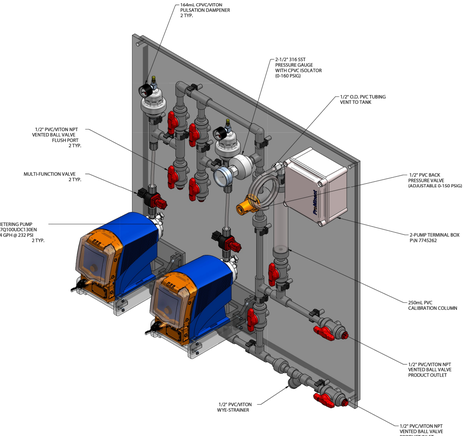

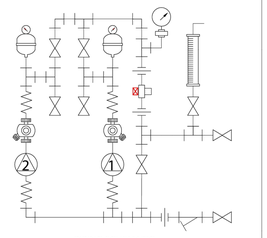

REV	DATE	DESCRIPTION	BY	APPD	REVD
1	06/12/24	AS-BUILT	MRH		
0	05/07/24	RELEASE FOR PRODUCTION	MRH		
B	04/29/24	CUSTOMER COMMENTS	MRH		
A	02/29/24	FIRST ISSUE	MRH		

CUSTOMER

JOB No 3024800058 | PURCHASE ORDER No POAPE9452

TITLE P2_050_PVC/VITON_NaOCl_WALL GENERAL ARRANGEMENT

THIS DRAWING IS THE PROPERTY OF PROMINENT FLUID CONTROLS INC. AND SHALL NOT BE COPIED OR TRANSFERRED WITHOUT THE WRITTEN CONSENT OF PROMINENT FLUID CONTROLS INC.

ENGINEERS SEAL

ProMinent® THE PROMINENT GROUP OF COMPANIES

PITTSBURGH, PA USA: PROMINENT FLUID CONTROLS LTD., 490 SOUTHGATE DRIVE, GUELPH, ONTARIO, CANADA N1H 6J3, PHONE: 519 836 2492, FAX: 519 836 5226

WWW.PROMINENT.US: PROMINENT FLUID CONTROLS INC., RIDC PARK WEST, 136 INDUSTRY DRIVE, PITTSBURGH P.A., USA. 15275, PHONE: 412 787 2484, FAX: 412 787 2054

DESIGNED	TFG	APPROVED	T.G.
DRAWN	MRH	SCALE	N.T.S.
CHECKED	TFG	DATE	02/29/24

DWG No 3024800058-200 | REV 1 | PAGE 2/2

IDS Engineering Group
13430 NW. Freeway, Suite 700
Houston, Tx. 77040
713.462.3178
TxEng Firm 2726 | TxSurv Firm 10110700

SURVEYED BY: KUO & ASSOCIATES, INC.
TBPE FIRM #F-4578; TBPLS FIRM #1007560

THIS DOCUMENT IS RELEASED FOR THE PURPOSE OF REVIEW UNDER THE AUTHORITY OF MARCEL KHOUW, P.E. 101807 ON 05/27/2026. IT IS NOT TO BE USED FOR CONSTRUCTION PURPOSES.

CITY OF HOUSTON
HOUSTON PUBLIC WORKS

LIFT STATION RENEWAL AND REPLACEMENT FY 2023

WOODFOREST LIFT STATION ODOR CONTROL BUILDING DETAIL

WBS NUMBER	FOR CITY OF HOUSTON USE ONLY
R-000267-0179-4	
DRAWING SCALE	
HORIZ: N.T.S. VERT: N/A	
CITY OF HOUSTON PM	
NAWARAJ PANTA, P.E.	
SHEET NO. 270 OF 361	

DWG. NO. WDF-A-02

FILE PATH: \\idseg.com\FS\Projects\0000\005708500 CoH Lift Stations - FY 2023\CAD\DWG\PRODUCTION\270-WOODFOREST FRP BLDG.dwg

PLOTTED: 5/13/2026 6:45 PM

FILE PATH: \\idseg.com\FS\Projects\0000\005708500 CoH Lift Stations - FY 2023\CAD\DWG\PRODUCTION\271-WOODFOREST RECORD DWG.dwg

NO.	DATE	REVISION	APP.

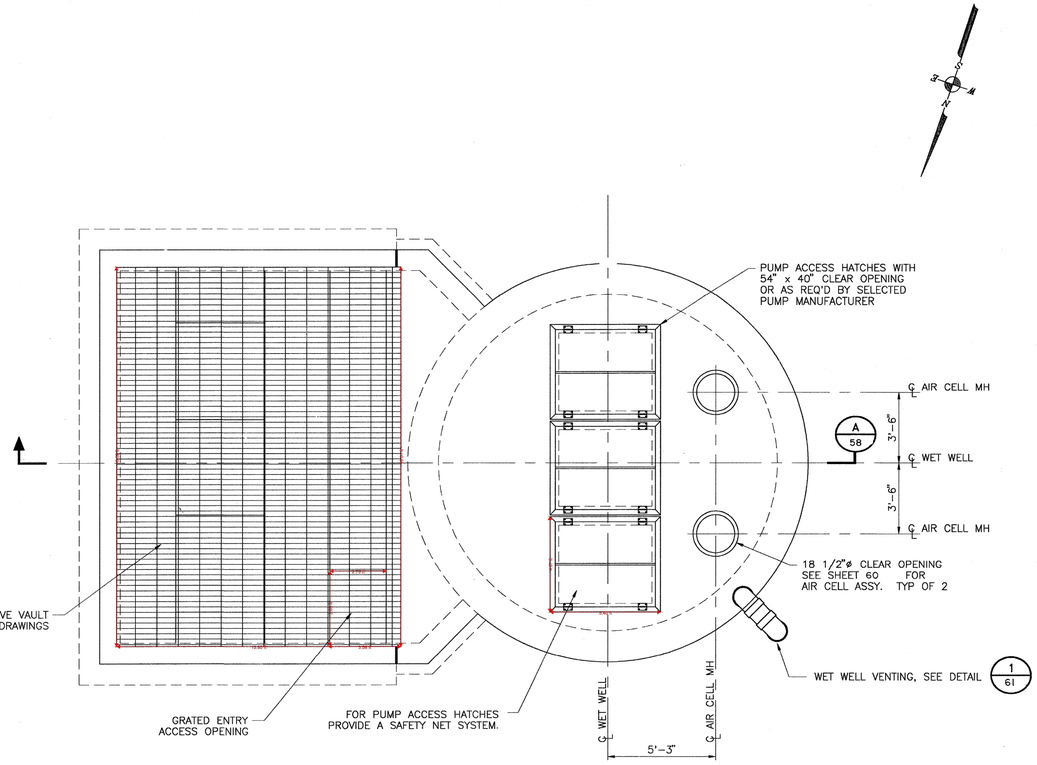

PLAN VIEW @ GRADE

NOTES:

1. SEE DETAIL AND STRUCTURAL DRAWINGS FOR DIMENSIONS AND INFORMATION NOT SHOWN.
2. CONTRACTOR TO CONFIRM SIZE AND LOCATION OF THE WET WELL HATCHES PER SELECTED HATCH AND PUMP MANUFACTURERS' REQUIREMENTS.

r.g.miller engineers
since 1966
1313 sherwood forest
houston, texas 77043
(713) 461-9600

PLAN VIEW @ GRADE
3 PUMPS @ 250 - 2000 GPM PER PUMP
LOW PROFILE, SECURED SITE CONFIGURATION

PROJECT NO: GFS NO. R-0018-20-3

TITLE: CITY OF HOUSTON
WOODFOREST LIFT STATION

CITY OF HOUSTON
DEPARTMENT OF PUBLIC WORKS AND ENGINEERING
ENGINEERING, CONSTRUCTION AND REAL ESTATE GROUP

SECTION APPROVALS

WATER ENGINEERING	TRAFFIC AND SIGNAL ENGINEERING
WASTEWATER ENGINEERING	STREET & BRIDGE ENGINEERING
STORM SEWER ENGINEERING	CONSTRUCTION

OTHER DEPARTMENTS

PLANNING AND DEVELOPMENT	SPONSOR DEPARTMENT
CITY ENGINEER — DATE 3/16/97	
DIRECTOR OF PUBLIC WORKS AND ENGINEERING — DATE 3/17/97	

SUBMITTED:
SCALE: 3/8" = 1'-0"
DATE: DECEMBER,1996
SURVEY BY:
F B NO:

DESIGNED BY: K.G.
DRAWN BY:
SHEET NO. 57 OF 98 SHEETS
CITY DWG NO: 33308 C57

SEAL: STATE OF TEXAS — JACK P. MILLER — 40610 — REGISTERED PROFESSIONAL ENGINEER — 2-25-97

CADD DWG FILE NO: COHSTD.BDR

0 1 2 3 ORIGINAL SCALE IN INCHES FOR REDUCED PLANS

REV NO	DESCRIPTION	APP'D	DATE

IDS Engineering Group
13430 NW. Freeway, Suite 700
Houston, Tx. 77040
713.462.3178
TxEng Firm 2726 | TxSurv Firm 10110700

SURVEYED BY: KUO & ASSOCIATES, INC.
TBPE FIRM #F-4578; TBPLS FIRM #1007560

THIS DOCUMENT IS RELEASED FOR THE PURPOSE OF REVIEW UNDER THE AUTHORITY OF MARCEL KHOUW, P.E. 101807 ON 05/27/2026. IT IS NOT TO BE USED FOR CONSTRUCTION PURPOSES.

CITY OF HOUSTON
HOUSTON PUBLIC WORKS

LIFT STATION RENEWAL AND REPLACEMENT FY 2023

EXISTING LIFT STATION RECORD DRAWING (SHEET 1 OF 3)

WBS NUMBER	FOR CITY OF HOUSTON USE ONLY
R-000267-0179-4	
DRAWING SCALE	
HORIZ: N.T.S. VERT: N/A	
CITY OF HOUSTON PM	
NAWARAJ PANTA, P.E.	

DWG. NO.	SHEET NO.
WDF-C-13	271 OF 361

FOR REFERENCE ONLY

PLOTTED: 5/13/2026 6:45 PM
FILE PATH: \\idseg.com\FS\Projects\0000\005708500 CoH Lift Stations - FY 2023\CAD\DWG\PRODUCTION\272-WOODFOREST RECORD DWG.dwg

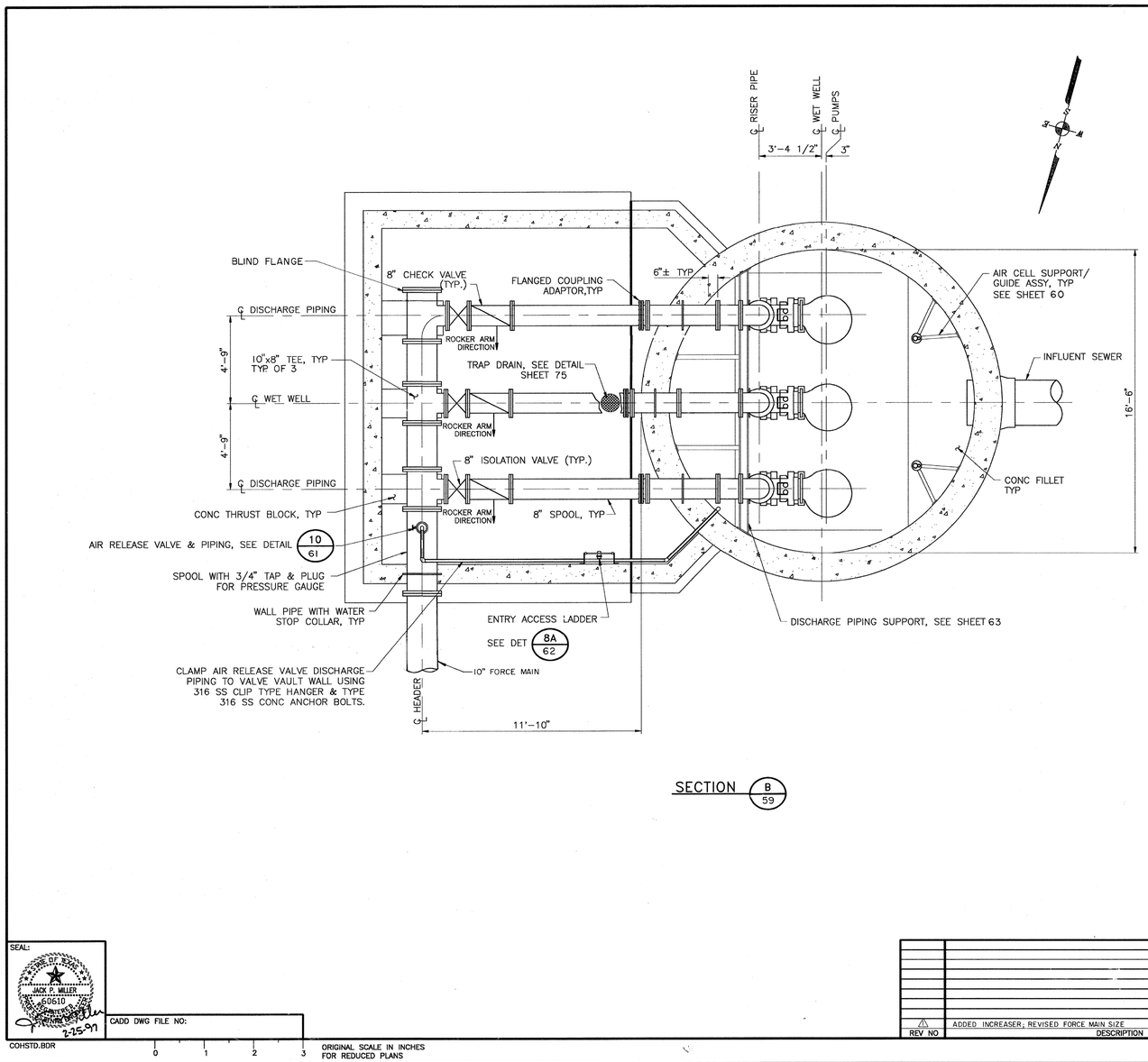

SECTION B/59

NOTES:

1. SEE DETAIL AND STRUCTURAL DRAWINGS FOR DIMENSIONS AND INFORMATION NOT SHOWN.
2. DIMENSIONS NOTED ARE RELATIVE TO THE PUMP SIZE AND MANUFACTURER SELECTED. CONTRACTOR SHALL CONFIRM.

SEAL: STATE OF TEXAS — JACK P. MILLER — 68610 — REGISTERED PROFESSIONAL ENGINEER — 2-25-97

CADD DWG FILE NO:

COHSTD.BDR

0 1 2 3 ORIGINAL SCALE IN INCHES FOR REDUCED PLANS

REV NO	DESCRIPTION	APP'D	DATE
1	ADDED INCREASER; REVISED FORCE MAIN SIZE		11/4/97

NO.	DATE	REVISION	APP.

r.g.miller engineers since 1966
1313 sherwood forest
houston, texas 77043
(713) 461-9600

BASE SECTION
3 PUMPS @ 250 -- 2000 GPM PER PUMP
LOW PROFILE, SECURED SITE CONFIGURATION

PROJECT NO: GFS NO. R-0018-20-3

TITLE: CITY OF HOUSTON WOODFOREST LIFT STATION

CITY OF HOUSTON
DEPARTMENT OF PUBLIC WORKS AND ENGINEERING
ENGINEERING, CONSTRUCTION AND REAL ESTATE GROUP

SECTION APPROVALS

WATER ENGINEERING — TRAFFIC AND SIGNAL ENGINEERING 3/7/97
WASTEWATER ENGINEERING 3/7/97 — STREET & BRIDGE ENGINEERING
STORM SEWER ENGINEERING — CONSTRUCTION 3/6/97

OTHER DEPARTMENTS

PLANNING AND DEVELOPMENT — SPONSOR DEPARTMENT

CITY ENGINEER — DATE 3/10/97
DIRECTOR OF PUBLIC WORKS AND ENGINEERING — DATE 3/13/97

SUBMITTED:
SCALE:
DATE: DECEMBER,1996
SURVEY BY:
F. B NO:
DESIGNED BY: K.G.
DRAWN BY:
SHEET NO.59 OF 98 SHEETS
CITY DWG NO: 33308 C59

IDS Engineering Group
13430 NW. Freeway, Suite 700
Houston, Tx. 77040
713.462.3178
TxEng Firm 2726 | TxSurv Firm 10110700

SURVEYED BY: KUO & ASSOCIATES, INC.
TBPE FIRM #F-4578; TBPLS FIRM #1007560

THIS DOCUMENT IS RELEASED FOR THE PURPOSE OF REVIEW UNDER THE AUTHORITY OF MARCEL KHOUW, P.E. 101807 ON 05/27/2026. IT IS NOT TO BE USED FOR CONSTRUCTION PURPOSES.

CITY OF HOUSTON
HOUSTON PUBLIC WORKS

LIFT STATION RENEWAL AND REPLACEMENT FY 2023

EXISTING LIFT STATION RECORD DRAWING (SHEET 2 OF 3)

WBS NUMBER	FOR CITY OF HOUSTON USE ONLY
R-000267-0179-4	
DRAWING SCALE	
HORIZ: N.T.S. VERT: N/A	
CITY OF HOUSTON PM	
NAWARAJ PANTA, P.E.	

DWG. NO. WDF-C-14

SHEET NO. 272 OF 361

FOR REFERENCE ONLY

PLOTTED: 5/13/2026 6:46 PM

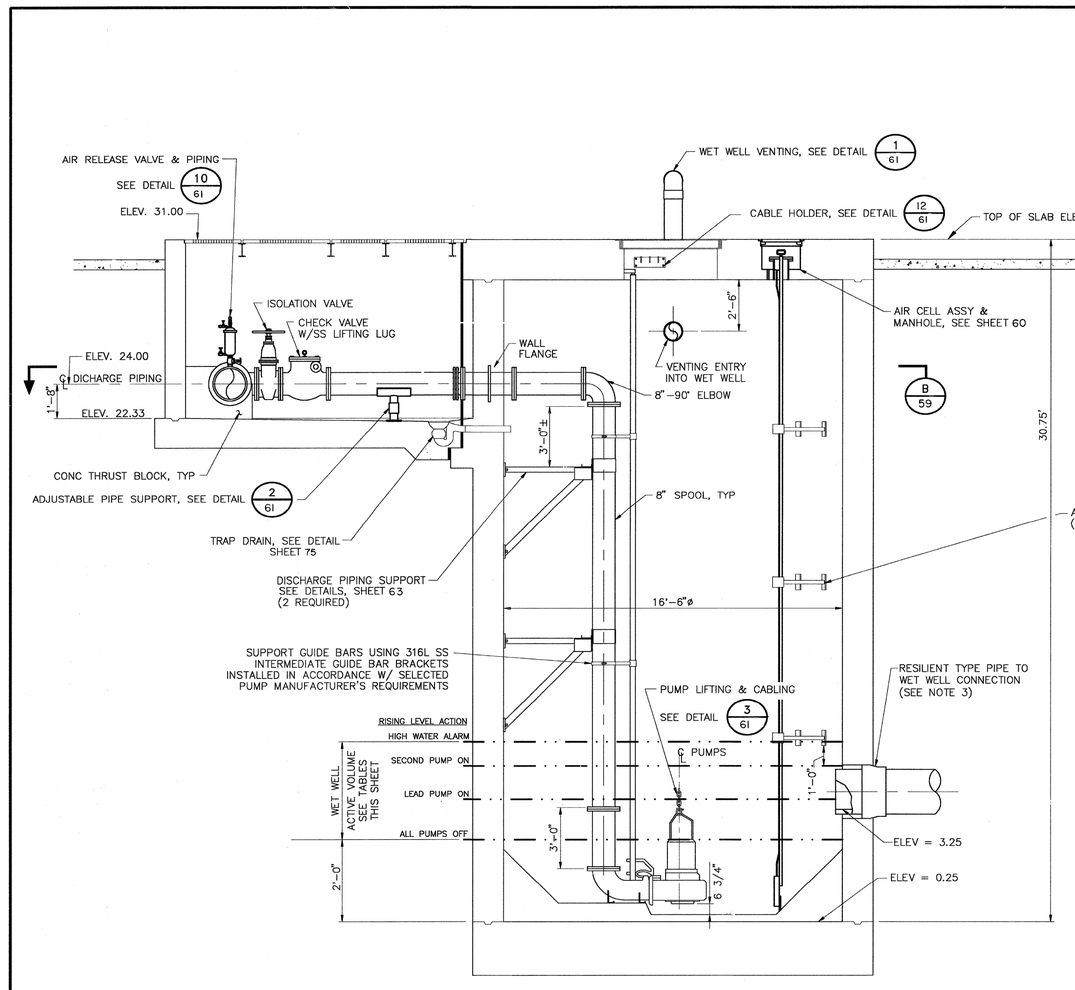

SECTION A/58

ALL WET WELL FILLETS NOT SHOWN FOR CLARITY

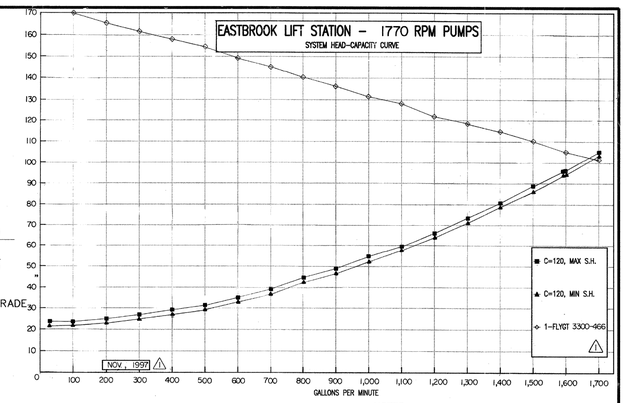

NOTES:
1. DIMENSIONS NOTED ARE RELATIVE TO THE PUMP SIZE AND MANUFACTURER SELECTED. CONTRACTOR SHALL VERIFY.
2. SEE DETAIL AND STRUCTURAL DRAWINGS FOR DIMENSIONS AND INFORMATION NOT SHOWN.
3. CONTRACTOR TO PROVIDE DETAIL FOR PIPE TO WET WELL CONNECTION DURING SHOP DRAWING SUBMISSION. EXTEND INFLUENT SEWER 4'-6" INSIDE WET WELL.

STATION OPERATION TABLES

NAME		
RISING LEVEL CYCLE		
WATER LEVEL ELEVATION	ACTION	PUMP(S) IN OPERATION
2.25	PUMPS OFF LEVEL – NO ACTION	ALL PUMPS ARE OFF
3.25	LEAD PUMP TURNS ON	LEAD PUMP ON
4.00	SECOND PUMP TURNS ON	LEAD & SECOND PUMP ON
4.75	HIGH WATER ALARM ON	HIGH WATER ALARM SOUND
FALLING LEVEL CYCLE		
WATER LEVEL ELEVATION	ACTION	PUMP(S) IN OPERATION
4.00	HIGH WATER LEVEL ALARM OFF	ALL PUMPS ON
3.25	LEAD PUMP TURNS OFF	SECOND PUMP ON
2.25	SECOND PUMP TURNS OFF	ALL PUMPS STOPPED – STANDBY PUMP SWITCHES TO LEAD PUMP

PUMP(S) IN OPERATION	OPERATING CAPACITY		NOMINAL PUMP SPEED RPM	MINIMUM PUMP DISCHARGE SIZE
	TOTAL GPM	T.D. HEAD IN FEET		
ONE PUMP ALONE	1597	96.63	1770	8"

REV NO	DESCRIPTION	APP'D	DATE
1	REVISED PUMP HP AND CAPACITY		11/6/97

SEAL: JACK P. MILLER, 50610, REGISTERED PROFESSIONAL ENGINEER, STATE OF TEXAS, 2-25-97

CADD DWG FILE NO: COHSTD.BDR

0 1 2 3 ORIGINAL SCALE IN INCHES FOR REDUCED PLANS

FOR REFERENCE ONLY

NO.	DATE	REVISION	APP.

r.g.miller engineers
since 1986
1313 sherwood forest
houston, texas 77043
(713) 461-9600

ELEVATION SECTION
3 PUMPS @ 250 – 2000 GPM PER PUMP
LOW PROFILE, SECURED SITE CONFIGURATION

PROJECT NO: GFS NO. R-0018-20-3

TITLE: CITY OF HOUSTON WOODFOREST LIFT STATION

CITY OF HOUSTON
DEPARTMENT OF PUBLIC WORKS AND ENGINEERING
ENGINEERING, CONSTRUCTION AND REAL ESTATE GROUP

SECTION APPROVALS

WATER ENGINEERING	TRAFFIC AND SIGNAL ENGINEERING
WASTEWATER ENGINEERING	STREET & BRIDGE ENGINEERING
STORM SEWER ENGINEERING	CONSTRUCTION

OTHER DEPARTMENTS

PLANNING AND DEVELOPMENT	SPONSOR DEPARTMENT
CITY ENGINEER	DATE: 3/10/97
DIRECTOR OF PUBLIC WORKS AND ENGINEERING	DATE: 3/13/97

SUBMITTED:	DESIGNED BY: K.G.
SCALE: 3/8" = 1'-0"	DRAWN BY:
DATE: DECEMBER, 1996	SHEET NO. 58 OF 98 SHEETS
SURVEY BY:	CITY DWG NO: 53308 C58
F B NO:	

IDS Engineering Group
13430 NW. Freeway, Suite 700
Houston, Tx. 77040
713.462.3178
TxEng Firm 2726 | TxSurv Firm 10110700

SURVEYED BY: KUO & ASSOCIATES, INC.
TBPE FIRM #F-4578; TBPLS FIRM #1007560

THIS DOCUMENT IS RELEASED FOR THE PURPOSE OF REVIEW UNDER THE AUTHORITY OF MARCEL KHOUW, P.E. 101807 ON 05/27/2026. IT IS NOT TO BE USED FOR CONSTRUCTION PURPOSES.

CITY OF HOUSTON
HOUSTON PUBLIC WORKS

LIFT STATION RENEWAL AND REPLACEMENT FY 2023

EXISTING LIFT STATION RECORD DRAWING (SHEET 3 OF 3)

WBS NUMBER	FOR CITY OF HOUSTON USE ONLY
R-000267-0179-4	
DRAWING SCALE	
HORIZ: N.T.S. VERT: N/A	
CITY OF HOUSTON PM	
NAWARAJ PANTA, P.E.	

DWG. NO. WDF-C-15

SHEET NO. 273 OF 361

FILE PATH: \\idseg.com\FS\Projects\0000\005708500 CoH Lift Stations – FY 2023\CAD\DWG\PRODUCTION\273-WOODFOREST RECORD DWG.dwg

PLOTTED: 5/21/2019 1:28 PM

FILE PATH: G:\COMMERCIAL PROJECTS\24137 - Lift Station Rehab & Construction\STRUCTURAL\V_DWGS\XREF\24137-TBlock.dwg

NO.	DATE	REVISION	APP.

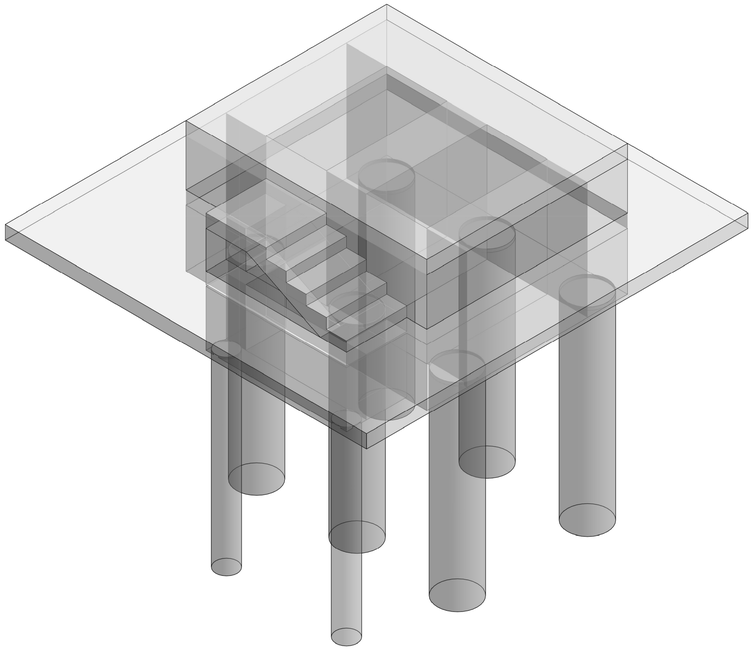

1 ODOR CONTROL BUILDING 3D

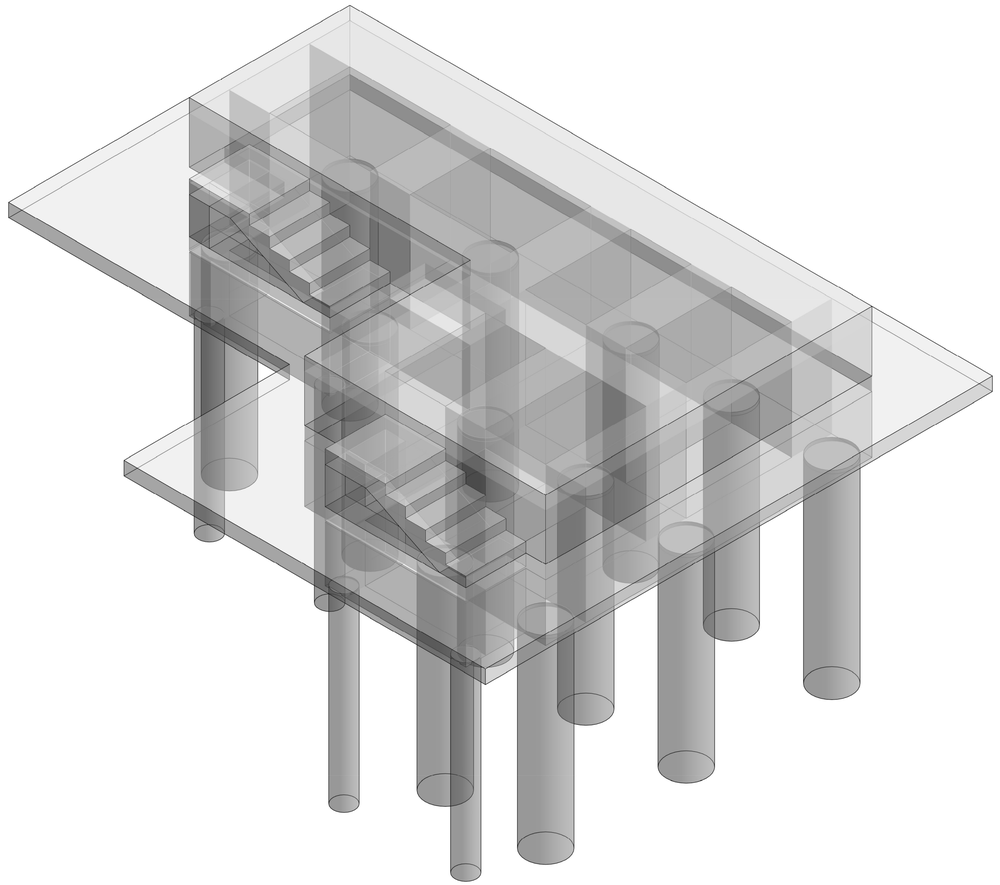

2 ELECTRICAL CONTROL BUILDING 3D

IDS Engineering Group
13430 NW. Freeway, Suite 700
Houston, Tx. 77040
713.462.3178
TxEng Firm 2726 / TxSurv Firm 10110700

CONCEPT ENGINEERS
TX. FIRM REGISTRATION # F-04417
Structures for the whole community

PRELIMINARY
NOT FOR CONSTRUCTION,
BIDDING, OR PERMIT PURPOSES.
FOR REVIEW ONLY.
DAVID MOORE
TEXAS LICENSE NO. 139405

Date: 05/08/26

CITY OF HOUSTON
DEPARTMENT OF PUBLIC WORKS AND ENGINEERING

LIFT STATION RENEWAL AND REPLACEMENT FY 2023

WOODFOREST LIFT STATION 3D MODEL

WBS NUMBER	FOR CITY OF HOUSTON USE ONLY
R-000267-0179-3	
DRAWING SCALE	
AS NOTED	
CITY OF HOUSTONPM	
NAWARAJ PANTA, P.E.	
SHEET NO. OF	

DWG. NO. WDF-S-01

IDS JOB No. 0057-085-00

PLOTTED: 5/21/2019 1:28 PM

DESIGN CRITERIA

1. DESIGN CODE INTERNATIONAL BUILDING CODE 2021 WITH CITY OF HOUSTON AMENDMENTS
2. DESIGN LOADS:
   A. LIVE LOADS: (PSF)DEAD LOADS

SLABS OF GRADE	100 PSF	RE: CIVIL FOR GENERATOR AND
STORAGE & MECHANICAL	150 PSF	ELECTRICAL BUILDING WEIGHTS

   B. DEAD LOADS (SUPERIMPOSED)

SLABS OF GRADE	15 PSF
STORAGE & MECHANICAL	15 PSF

	UNIFORM LOADS	CONCENTRATED LOADS
STAIRS & EXISTING WAY	100 PSF	300 LBS
HANDRAILS & GUARD RAILS	50 LB/FT	200 LBS

3. WIND SPEED 147 MPH 3 SEC. GUST (ULTIMATE)
   EXPOSURE CATEGORY "C"
   RISK CATEGORY III
   DESIGN WIND FORCE ON FRP BUILDING XX LBS
   DESIGN WIND FORCE ON ELECTRICAL BUILDING XX LBS

GENERAL NOTES

1. THE CONTRACTOR SHALL COMPARE THE STRUCTURAL DRAWINGS WITH THE ARCHITECTURAL, CIVIL, PLUMBING, MECHANICAL AND ELECTRICAL DRAWINGS AS TO LAYOUT DIMENSIONS AND ELEVATIONS. ALL DISCREPANCIES, IF ANY ARE FOUND, SHALL BE REPORTED TO THE ARCHITECT FOR PROPER ADJUSTMENT BEFORE PROCEEDING WITH WORK. ANY DISCREPANCIES WITH THE STRUCTURAL DOCUMENTS SHALL BE IMMEDIATELY BROUGHT TO THE ATTENTION OF THE ARCHITECT/ENGINEER PRIOR TO THE SUBMISSION OF BIDS OF PROPOSALS, BEFORE COMMENCING THE WORK IN QUESTION. NO FIELD CHANGES OR DEVIATIONS FROM THE DESIGN ARE TO BE MADE WITHOUT PRIOR WRITTEN APPROVAL OF THE ARCHITECT AND/OR STRUCTURAL ENGINEER. NO CHANGE ORDER CONSIDERATION WILL BE GIVEN TO CHANGES FOR WHICH THE ARCHITECT AND/OR ENGINEER WERE NOT CONTACTED PRIOR TO CONSTRUCTION OF THE AFFECTED ITEM.
2. IN THE EVENT THAT CERTAIN FEATURES OF THE CONSTRUCTION ARE NOT FULLY SHOWN IN THE DRAWING OR CALLED OUT IN THE STRUCTURAL NOTES OR IN THE SPECIFICATIONS, THEN SUCH CONSTRUCTION SHALL BE IN THE SAME CHARACTER FOR SIMILAR CONDITIONS THAT ARE SHOWN OR CALLED FOR.
3. SEE ARCHITECTURAL DRAWINGS FOR FLOOR ELEVATIONS, SLOPE, AND THE LOCATION OF DEPRESSED FLOOR AREAS, AND OTHER REQUIREMENTS AT COLUMNS, WALLS, STAIRWELLS, SLABS, ETC. THE CONTRACTOR SHALL COMPARE THE STRUCTURAL SECTIONS WITH THE ARCHITECTURAL SECTIONS AND REPORT ANY DISCREPANCY TO THE ARCHITECT PRIOR TO FABRICATING OR INSTALLING STRUCTURAL MEMBERS.
4. PRINCIPAL OPENINGS THROUGH THE FRAMING ARE SHOWN ON DRAWINGS. THE CONTRACTOR SHALL EXAMINE THE ARCHITECTURAL AND MECHANICAL DRAWINGS FOR THE REQUIRED OPENINGS AS HE SHALL PROVIDE FOR ALL OPENINGS WHETHER SHOWN ON THE DRAWINGS OR NOT AND SHALL VERIFY SIZE AND LOCATION OF ALL OPENINGS WITH THE MECHANICAL CONTRACTOR. ANY DEVIATION FROM THE OPENINGS SHOWN ON THE STRUCTURAL DRAWINGS SHALL BE BROUGHT TO THE ENGINEER'S ATTENTION FOR APPROVAL.
5. REFER TO THE SPECIFICATIONS PROVIDED WITH THIS SUBMITTAL FOR THE REQUIRED STRUCTURAL SUBMITTALS THAT MUST BE SUBMITTED FOR E.O.R. REVIEW.
6. SPECIFICATIONS ARE PART OF THE CONSTRUCTION DOCUMENTS AND MUST BE USED IN CONJUNCTION WITH THE DRAWINGS.
7. DETAILS LABELED "TYPICAL DETAILS" ON DRAWINGS APPLY TO SITUATIONS OCCURRING ON THE PROJECT THAT ARE THE SAME OR SIMILAR TO THOSE SPECIFICALLY DETAILED. SUCH DETAILS APPLY WHETHER OR NOT THEY ARE REFERENCED AT EACH LOCATION. NOTIFY E.O.R. OF CONFLICTS REGARDING APPLICABILITY OF "TYPICAL DETAILS".
8. DO NOT LOAD THE SLAB ON GRADE WITH ERECTION CRANES OR ERECTION EQUIPMENT. THE SLAB HAS NOT BEEN DESIGNED FOR CRANE LOADS AND WILL REQUIRE AN INCREASE OF THICKNESS AND/OR REINFORCEMENT. OBTAIN E.O.R. APPROVAL ON PROPOSED CRANE SUPPORT PLAN FOR SLABS PRIOR TO COMMENCING WORK.
9. DO NOT STORE OR STACK CONSTRUCTION MATERIALS ON POURED OR ERECTED FLOOR/ROOFS IN EXCESS OF 80 PERCENT OF LIVE LOAD. CONTRACTOR SHALL ENSURE THAT ALL SUB-CONTRACTORS ARE INFORMED OF LOAD RESTRICTIONS. AVOID IMPACT WHEN PLACING MATERIALS OF POURED OR ERECTED SLABS FLOOR OR ROOF.
10. THE CONTRACT STRUCTURAL DOCUMENTS REPRESENT THE FINISHED STRUCTURE. THE CONTRACTOR IS RESPONSIBLE FOR THE MEANS OR METHODS OF CONSTRUCTION, PROVIDE ALL MEASURES REQUIRED TO PROTECT THE STRUCTURE, WORKMEN AND OTHER PERSONS DURING CONSTRUCTION; INCLUDING SHORING FOR CONSTRUCTION EQUIPMENT, SHORING FOR THE BUILDING, FORMS AND SCAFFOLDING, SHORING FOR THE RETAINING WALLS AND OTHER TEMPORARY SUPPORTS REQUIRED.
11. ALL STAIR MEMBERS INCLUDING, BUT NOT LIMITED TO, STRINGERS AND HANDRAILS SHALL BE DESIGNED BY STAIR ENGINEER AND STEEL FABRICATOR.
12. SHOP DRAWINGS AND OTHER ITEMS SHALL BE SUBMITTED TO THE ENGINEER FOR REVIEW PRIOR TO FABRICATION. ALL SHOP DRAWINGS SHALL BE REVIEWED BY THE GENERAL CONTRACTOR BEFORE SUBMITTAL. THE ENGINEER'S REVIEW IS TO BE FOR CONFORMANCE WITH THE DESIGN CONCEPT AND GENERAL COMPLIANCE WITH THE RELEVANT CONTRACT DOCUMENTS. THE ENGINEER'S REVIEW DOES NOT RELIEVE THE CONTRACTOR OF THE SOLE RESPONSIBILITY TO REVIEW, CHECK AND COORDINATE THE SHOP DRAWINGS PRIOR TO SUBMISSION. THE CONTRACTOR REMAINS SOLELY RESPONSIBLE FOR ERRORS AND OMISSIONS ASSOCIATED WITH THE PREPARATION OF SHOP DRAWINGS AS THEY PERTAIN TO MEMBER SIZES, DETAILS, DIMENSIONS, ETC.
13. SHOP DRAWINGS SHALL BE PREPARED WITH SUFFICIENT DETAIL AND NOTATION FOR FIELD ERECTION AND INSTALLATION. PHOTO COPIES OF THE CONTRACT DRAWINGS FOR USE AS SHOP DRAWINGS WILL NOT BE PERMITTED.

FOUNDATION NOTES

1. THE FOUNDATION SYSTEM HAS BEEN DESIGNED BASED ON THE FOLLOWING RECOMMENDATIONS SPECIFIED IN THE GEOTECHNICAL INVESTIGATION REPORT NUMBER HGT2210460.1.1 (D) BY HVJ ASSOCIATES, INC., DATED 4/2/2026, THE FOUNDATION SYSTEM IS DRILLED STRAIGHT SHAFTS AND AND HAS BEEN DESIGNED USING THE CAPACITIES THAT CAN BE FOUND IN THE GEOTECHNICAL REPORT. REFER TO PLAN FOR TOTAL DEPTH BELOW EXISTING GRADE. CONCRETE SHOULD BE PLACED IN THE DRILLED HOLES WITHIN FOUR HOURS OF EXCAVATION TO REDUCE THE RISK OF GROUNDWATER SEEPAGE, DETERIORATION OF THE FOUNDATION BEARING SURFACE AND UNDERREAM COLLAPSE. REFER TO THE GEOTECHNICAL REPORT.
2. THE CONTRACTOR MUST OBTAIN A COPY OF THE GEOTECHNICAL REPORT DESCRIBED ABOVE AND FOLLOW ALL RECOMMENDATIONS IN REGARDS TO SOIL PREPARATION, COMPACTION, REMOVAL AND FILL REQUIREMENTS AS NECESSARY TO ACHIEVE THE DESIGN SOIL BEARING PRESSURE CAPACITY IF REQUIRED.
3. IN GENERAL SITE PREPARATION SHOULD CONSIST OF REMOVING ANY EXISTING FOUNDATIONS, PAVED AREAS, GRASS, TREE ROOTS, AND STRIPPING ORGANIC TOP SOILS. THE EXPOSED SUBGRADE SHOULD BE PROOF-ROLLED TO DETECT LOCAL WEAK AREAS WHICH SHOULD BE EXCAVATED, PROCESSED, AND RECOMPACTED IN LOOSE LIFTS OF APPROXIMATELY EIGHT-INCH THICKNESS. IN FLOOR SLAB, SUBGRADE SOILS SHOULD BE COMPACTED TO A MINIMUM OF 95% OR THE PROCTOR MAXIMUM DRY DENSITY (ASTM D698) AT A MOISTURE CONTENT WITHIN -1% TO +3% OF MAXIMUM MOISTURE. TREE STUMPS, IF PRESENT, SHOULD BE REMOVED BELOW FLOOR SLAB OR PAVEMENT GRADE, AND REMOVE 2 FEET OF EXISTING SOIL AND REPLACE WITH SELECTED FILL AS PER CITY OF HOUSTON STANDARD CONSTRUCTION SPECIFICATIONS. REFER TO GEOTECHNICAL REPORT.
4. SEE CIVIL DRAWINGS FOR ALL EXTERIOR SLABS AND CURBS AND LIMITS OF EXCAVATION.
5. DURING THE PLACEMENT AND FINISHING OF SLAB, USE FOGGING OR MISTING EQUIPMENT TO APPLY MOISTURE TO THE SLAB AREAS UNTIL FINAL CURING HAS BEGUN TO AVOID EXCESSIVELY RAPID EVAPORATION OF WATER FROM THE SLAB. DO NOT USE SPRAY WATER BOTTLES THAT APPLY LARGE AMOUNTS OF WATER THE SLAB SURFACE
6. FOR ALL REINFORCED CONCRETE FOUNDATION MEMBERS, CONTRACTOR SHALL FOLLOW ALL THE APPLICABLE ITEMS ON THE "REINFORCED CONCRETE NOTES:".
7. PROTECT PIPES AND CONDUITS RUNNING THROUGH WALLS AND SLABS WITH 1/2" EXPANSION MATERIAL.
8. DO NOT PLACE FOOTINGS OR SLABS AGAINST SUBGRADE CONTAINING FREE WATER.
9. MAINTAIN PROPER SITE DRAINAGE DURING CONSTRUCTION TO ENSURE SURFACE RUNOFF AWAY FROM STRUCTURES AND TO PREVENT PONDING OF SURFACE RUNOFF NEAR THE STRUCTURES.
10. KEEP OPEN EXCAVATIONS AROUND BUILDING DRY, BACKFILL AGAINST FOUNDATIONS AND GRADE BEAMS AS SOON AS PRACTICAL. PUMP WATER OUT OF OPEN EXCAVATIONS OF FLOODING PRIOR TO BACKFILLING.

REINFORCED CONCRETE NOTES

1. DETAILING OF CONCRETE REINFORCEMENT AND ACCESSORIES SHALL BE IN ACCORDANCE WITH ACI PUBLICATION 315, LATEST EDITION.
2. CONCRETE REINFORCING SHALL CONFORM TO THE REQUIREMENTS OF ASTM A-615, GRADE 60. WELDED WIRE FABRIC SHALL BE IN ACCORDANCE WITH ASTM A-185.
3. CONCRETE IN ALL AREAS SHALL HAVE SAND AND GRAVEL AGGREGATE CEMENT CONFORMING TO ASTM C 150, TYPE I, AND DESIGNATED COMPRESSIVE STRENGTH (f'c) AT 28 DAYS AS CALLED OUT IN NOTE #4 BELOW. ALSO SEE PROJECT SPECIFICATIONS FOR DIFFERENT AGGREGATE AND COMPRESSIVE STRENGTH REQUIREMENTS.
4. UNLESS NOTED OTHERWISE, CONCRETE SHALL MEET OR EXCEED THE MINIMUM COMPRESSIVE STRENGTH REQUIREMENTS AT 28 DAYS:
   A. CONCRETE DESIGN STRENGTH:

a. GRADE BEAMS & SLABS ON GRADE:	f'c = 4,000 PSI
b. PIER CAPS, WALLS, STAIRS & ANY OTHER NOT NOTED:	f'c = 4,000 PSI
c. PIERS:	f'c = 4,000 PSI

   B. CONCRETE COVER REINFORCEMENT COVER SHALL MEET THE FOLLOWING REQUIREMENTS (UNLESS SPECIFICALLY OTHERWISE IN PLANS):

a. SLAB ON GRADE	1" TOP
b. GRADE BEAMS	1 1/2" TOP, 3" BOTTOM, 2" SIDES
c. DRILLED PIERS	3" ALL SURFACES
d. COLUMNS	1 1/2" ALL SURFACES

   (SEE SECTION 20.6 ACI 318-19 FOR CONDITIONS NOT NOTED.
5. FLY ASH MAY BE USED TO REPLACE A PORTION OF THE PORTLAND CEMENT, THE RATIO OF FLY ASH TO THE TOTAL OF THE FLY ASH AND CEMENT IN A MIX SHALL NOT EXCEED 20%. FLY ASH SHALL CONFORM TO ASTM C618, TYPE C OR F.
6. IT SHALL BE THE RESPONSIBILITY OF THE CONTRACTOR TO COORDINATE WITH THE CONCRETE SUPPLIER TO ENSURE A PUMPABLE AND WORKABLE MIX. TESTING LAB WILL CONTROL SLUMP AND ONLY TESTING LAB CAN ADD WATER ON JOB SITE. CONCRETE SUPPLIER WILL INFORM TESTING LAB/CONTRACTOR OF MAXIMUM WATER ALLOWABLE THAT CAN BE ADDED ON JOB SITE BEFORE W/C RATIO IS EXCEEDED. THE USE OF PLASTICIZERS, RETARDANTS AND OTHER ADDITIVES SHALL BE AT THE OPTION OF THE CONTRACTOR SUBJECT TO THE APPROVAL OF THE STRUCTURAL ENGINEER. FOLLOW THE RECOMMENDATIONS OF THE MANUFACTURER FOR THE PROPER USE OF ADDITIVES. THE USE OF CALCIUM CHLORIDE OR OTHER CHLORIDE BEARING SALTS SHALL NOT BE PERMITTED.
7. CONCRETE SLUMP TESTS SHALL BE MADE BEFORE AND AFTER THE ADDITION OF ADMIXTURES AND MAY BE TAKEN AT THE BACK OF THE TRUCK. CONCRETE FOR THE PREPARATION OF TEST CYLINDERS SHALL BE TAKEN FROM THE HOSE END FOR CONCRETE PLACED BY PUMP.
8. ALL REINFORCING STEEL SHALL BE LAPPED PER THE LATEST EDITION OF THE ACI-318-19. SPLICES. CORNERS AND INTERSECTIONS WITH STANDARD 90 DEGREE BEND OR CORNER BARS. LAP TOP BARS AT CENTER OF SPAN. LAP WELDED WIRE MESH ONE FULL MESH AT SIDE AND END LAPS. DO NOT LAP OR WELD REINFORCEMENT IN THE FIELD UNLESS SPECIFICALLY SHOWN ON STRUCTURAL DRAWINGS OR APPROVED BY E.O.R. WHEN SPECIFICALLY APPROVED, PROVIDE WELDED REINFORCEMENT IN ACCORDANCE WITH ASTM A706, USE LOW HYDROGEN ELECTRODES FOR WELDING OF REINFORCEMENT IN CONFORMANCE WITH "WELDING STEEL, METAL INSERTS AND CONNECTIONS IN REINFORCED CONCRETE CONSTRUCTION" AMERICAN WELDING SOCIETY AWS D1.4 WHERE REQUIRED, PROVIDE DOWELS TO MATCH SIZE AND SPACING OF MAIN REINFORCING.
9. REFER TO ARCHITECTURAL, MECHANICAL, ELECTRICAL AND PLUMBING DRAWINGS FOR ANY OTHER ADDITIONAL SLEEVES, ANCHORS, VENT OPENINGS, ETC., NOT SHOWN ON STRUCTURAL PLANS THAT MIGHT BE REQUIRED.
10. PLACE CONCRETE IN A MANNER SO AS TO PREVENT SEGREGATION OF THE MIX. DELAY FLOATING AND TROWELLING OPERATIONS UNTIL CONCRETE HAS LOST SURFACE WATER SHEEN OR ALL FREE WATER. DO NOT SPRINKLE FREE CEMENT ON THE SLAB SURFACE. FINISHING OF SLAB SURFACES SHALL COMPLY WITH THE RECOMMENDATIONS OF AC1 302.1 AND 304.
11. UNLESS NOTED OTHERWISE ON PLAN, CONTROL JOINTS IN SLAB ON GRADE TO BE LOCATED APPROXIMATELY 225 SQ. FT. GRIDS. ACTUAL LOCATION TO BE DETERMINED BY OWNER OR CONTRACTOR.
12. PROVIDE 7 DAY CURING OF SLAB IMMEDIATELY AFTER FINISHING, USING ONE OF THE FOLLOWING METHODS
   A. CONTINUOUSLY WATERED BURLAP
   B. WATERPROOF MEMBRANES
13. PROTECT THE CONCRETE SURFACE BETWEEN FINISHING OPERATIONS ON HOT, DRY WINDY DAYS OR ANY OTHER TIME THAT PLASTIC SHRINKAGE CRACKS COULD DEVELOP BY USING WET BURLAP, PLASTIC MEMBRANE OR FOGGING. PROTECT CONCRETE SLAB AT ALL TIMES FROM RAIN, HAIL OR OTHER INJURIOUS EFFECTS.
14. UNLESS SPECIFIED CONCRETE MUST REACH THE FOLLOWING PERCENTAGES OF ITS 28-DAY COMPRESSIVE STRENGTH (F'c), BEFORE FORMS MAY BE REMOVED. 40% WALLS, COLUMNS & BEAM SIDES, 70% JOISTS, PANS & BEAM BOTTOMS (IF RESHORED), 85% SHORING FOR FLOOR SYSTEMS (IF NOT SHORED)
15. AN INDEPENDENT CERTIFIED TESTING LABORATORY SHALL VERIFY AND PROVIDE REPORTS CERTIFYING THE FOLLOWING:
   A. CONCRETE PLANT BATCH TICKETS FOR EACH TRUCK TO VERIFY THAT THE CONCRETE MATCHES THE APPROVED DESIGN MIX.
   B. CONCRETE SLUMP IS IN ACCORDANCE WITH APPROVED DESIGN MIX.
   C. CONCRETE PLACEMENT PREPARATIONS ARE IN ACCORDANCE WITH ACI SPECIFICATIONS.
   D. CONTROL / CONTRACTION JOINTS ARE INSTALLED WITHIN THE ACI TIME ALLOWANCE.
   E. PROPER CURING METHODS ARE BEING UTILIZED.
16. NO CONCRETE SHALL BE PLACED OUTSIDE OF THESE SPECIFICATIONS WITHOUT THE ENGINEER'S APPROVAL. ANY ITEMS NOT IN COMPLIANCE WITH THE OUTLINED SPECIFICATION SHALL BE REPORTED TO THE ARCHITECT AND STRUCTURAL ENGINEER WITHIN 24 HOURS.
17. REFER TO ARCHITECTURAL DRAWINGS FOR WATER PROOFING REQUIREMENTS.
18. UNLESS OTHERWISE NOTED ALL VERTICAL REINFORCEMENT ON COLUMNS SHALL BE SPLICED A MINIMUM OF 36 BAR DIAMETERS.
19. THE SHORES FOR THE FLOOR SLAB & BEAMS SHALL BE ADEQUATE TO CARRY THE TOTAL WEIGHT OF THE SLAB SYSTEM TO THE GROUND, ALL SHORING / RESHORING DESIGN SHALL BE THE RESPONSIBILITY OF THE CONTRACTOR.
20. THERE SHALL BE NO HORIZONTAL CONSTRUCTION JOINTS IN CONCRETE POURS. ALL CONSTRUCTION JOINTS SHALL BE MADE IN THE MIDDLE OF THE SPAN. WHEN A BEAM INTERSECTS A GIRDER AT MIDDLE 1/3 OF SPAN, THE JOINTS SHALL BE OFFSET DISTANCE EQUAL TO TWICE THE WIDTH OF THE BEAM. THE LOCATION OF CONSTRUCTION JOINTS SHALL BE APPROVED BY THE STRUCTURAL ENGINEER. ADDITIONAL REINFORCING AT CONSTRUCTION JOINTS SHALL BE SPECIFIED BY THE BEGINNER, SEE TYPICAL DETAIL. PROVIDE 75 FEET MAXIMUM SPACING OF CONSTRUCTION JOINTS IN GRADE BEAMS.
21. THE MAXIMUM WATER TO CEMENT RATIO: 0.50 (MAX) FOR NON-AIR ENTRAINED. AND 0.48 (MAX) FOR AIR ENTRAINED.
22. MAX. AGGREGATE SIZE 3/4 INCH.
23. PROVIDE BAR SUPPORT ACCESSORIES IN ACCORDANCE WITH THE LATEST ACI MANUAL, STANDARD PRACTICE FOR DETAILING REINFORCED CONCRETE STRUCTURES, SUPPORT BEAM REINFORCING ON BEAMS BOLSTERS SPACED NOT MORE THAN 4 FEET ON CENTER.
24. PROVIDE BAR SUPPORTS WITH PLASTIC COATED LEGS OR HOT DIP GALVANIZING AFTER FABRICATION FOR CONCRETE EXPOSED TO VIEW. PROVIDE STAINLESS STEEL BAR SUPPORTS FOR CONCRETE TO RECEIVE A SAND BLAST FINISH.
25. FOR PIPE INSTALLED HORIZONTALLY WITHIN THE SLAB, PROVIDE MAXIMUMS OUTSIDE DIAMETER OF 30% OF SLAB THICKNESS. PLACE CONDUIT OR PIPE BETWEEN THE TOP AND BOTTOM LAYER OF REINFORCEMENT WITH THE CENTER THIRD OF SLAB, DO NOT SPACE CONDUITS OF PIPES CLOSER THAN THREE DIAMETERS OF WIDTHS ON CENTER.
26. CONTRACTOR AND SUPPLIER TO COORDINATE ADDITIONAL ADMIXTURES AND SUBMIT MIX DESIGNS AS REQUIRED FOR MASS CONCRETE. AFTER COMPLETION OF THE EQUIPMENT FOUNDATION, THE CONCRETE SHALL BE INSPECTED AND ALL CRACKS FROM SHRINKAGE AND CONSTRUCTION STRESS SHALL BE REPAIRED.

REINFORCED CONCRETE NOTES CONTINUED

TENSION DEVELOPMENT LENGTH ('ld')

BAR SIZE	f'c= 3000 PSI		f'c= 4000 PSI		f'c= 5000 PSI		f'c= 6000 PSI		f'c= 7000 PSI		f'c= 8000 PSI		f'c= 10000 PSI	
	ld TOP	ld BOT	ld TOP	ld BOT	ld TOP	ld BOT	ld TOP	ld BOT	ld TOP	ld BOT	ld TOP	ld BOT	ld TOP	ld BOT
#3	1'-9"	1'-4"	1'-6"	1'-2"	1'-5"	1'-1"	1'-3"	1'-0"	1'-2"	1'-0"	1'-1"	1'-0"	1'-0"	1'-0"
#4	2'-4"	1'-10"	2'-1"	1'-7"	1'-10"	1'5"	1'-8"	1'-3"	1'-7"	1'-2"	1'-5"	1'-1"	1'-4"	1'-0"
#5	3'-0"	2'-3"	2'-7"	2'-0"	2'-4"	1'9"	2'-1"	1'-7"	2'-0"	1'-6"	1'-10"	1'-5"	1'-8"	1'-3"
#6	3'-7"	2'-9"	3'-11"	2'-4"	2'-9"	2'-1"	2'-6"	1'-11"	2'-4"	1'-10"	2'-2"	1'-8"	1'-11"	1'-6"
#7	5'-2"	4'-0"	4'-5"	3'-6"	4'-0"	3'-1"	3'-8"	2'-10"	3'-5"	2'-8"	3'-2"	2'-5"	2'-10"	2'-2"
#8	5'-11"	4'-7"	5'-2"	3'-11"	4'-7"	3'-6"	4'-2"	3'-3"	4'-0"	3'-1"	3'-8"	2'-10"	3'-3"	2'-6"
#9	6'-8"	5'-2"	5'-9"	4'-5"	5'-2"	4'-0"	4'-9"	3'-8"	4'-5"	3'-5"	4'-1"	3'-2"	3'-8"	2'-10"
#10	7'-6"	5'-10"	6'-6"	5'-0"	5'-10"	4'-6"	5'-4"	4'-1"	5'-0"	3'-10"	4-7"	3'-7"	4'-2"	3'-2"
#11	8'-4"	6'-5"	7'-3"	5'-7"	6'-6"	5'-0"	5'-11"	4'-7"	5'-6"	4'-3"	5'-1"	3'-11"	4'-5"	3'-6"

NOTES:
1. TABULATED VALUES ARE APPLICABLE ONLY IF CLEAR SPACING OF BARS BEING DEVELOPED OR SPLICED IS NOT LESS THAN 'db', CLEAR COVER IS NOT LESS THAN 'db' AND STIRRUPS OR TIES THROUGHOUT 'ld' IS NOT LESS THAN CODE MINIMUM, OR CLEAR SPACING OF BARS BEING DEVELOPED OR SPLICED IS NOT LESS THAN 2" 'db' AND CLEAR COVER IS NOT LESS THAN 'db'. FOR OTHER CASES , MULTIPLY TABULATED VALUES BY 1.5.
2. 'TOP' BARS ARE HORIZONTAL REBARS WITH MORE THAN 12 IN OF FRESH CONCRETE CAST BELOW THE BARS AT THE DEVELOPMENT LENGTH.
3. FOR LIGHT WEIGHT CONCRETE MULTIPLY THE TABULATED VALUES BY 1.3.
4. FOR EPOXY COATED BARS, MULTIPLY THE TABULATED VALUES BY 1.5 FOR 'BOT' BARS, OR BY 1.3. FOR TOP BARS.
5. FOR REINFORCEMENT OTHER THAN GRADE 60, MODIFY THE TABULATED VALUES BY THE RATIO OF THE REINFORCEMENT YIELD STRENGTH DIVIDED BY 60 KSI.

TENSION LAP SPLICES-CLASS B- TOP & BOT BARS

BAR SIZE	f'c= 3000 PSI		f'c= 4000 PSI		f'c= 5000 PSI		f'c= 6000 PSI		f'c= 7000 PSI		f'c= 8000 PSI		f'c= 10000 PSI	
	TOP	BOT	TOP	BOT	TOP	BOT	TOP	BOT	TOP	BOT	TOP	BOT	TOP	BOT
#3	2'-4"	1'-9"	2'-0"	1'-6"	1'-10"	1'-5"	1'-8"	1'-4"	1'-7"	1'-4"	1'-5"	1'-4"	1'-3"	1'-0"
#4	3'-1"	2'-4"	2'-8"	2'-1"	2'-5"	1'-10"	2'-2"	1"-8"	2'-1"	1'-7"	1'-11"	1'-5"	1'-8"	1'-7"
#5	3'-10"	3'-0"	3'-4"	2'-7"	3'-0"	2'-4"	2'-9"	2'-1"	2'-7"	2'-0"	2'-4"	1'-10"	2'-1"	1'-8"
#6	4'-8"	3'-7"	4'-0"	3'-1"	3'-7"	2'-9"	3'-3"	2'-8"	2'-11"	2'-4"	2'-10"	2'-2"	2'-6"	1'-11"
#7	6'-9"	5'-2"	5'-10"	4'-6"	5'-3"	4'-0"	4'-9"	3'-8"	4'-6"	3'-5"	4'-2"	3'-2"	3'-8"	2'-10"
#8	7'-9"	5'-11"	6'-8"	5'-2"	6'-0"	4'-7"	5'-5"	4'-2"	5'-1"	3'-11"	4'-9"	3'-8"	4'-3"	3'-3"
#9	8'-8"	6'-8"	7'-6"	5'-2"	6'-9"	5'-2"	6'-2"	4'-9"	5'-9"	4'-5"	5'-4"	4'-1"	4'-9"	3'-8"
#10	9'-10"	7'-6"	8'-6"	5'-9"	7'-7"	5'-10"	6'-11"	5'-4"	6'-6"	5'-0"	6'-0"	4'-7"	5'-4"	4'-2"
#11	10'-11"	8'-4"	9'-5"	7'-3"	8'-5"	6'-6"	7'-8"	5'-11"	7'-2"	5'-6"	6'-8"	5'-1"	5'-11"	4'-5"

NOTES:
1. TABULATED VALUES ARE APPLICABLE ONLY IF CLEAR SPACING OF BARS BEING DEVELOPED OR SPLICED IS NOT LESS THAN 'db', CLEAR COVER IS NOT LESS THAN 'db' AND STIRRUPS OR TIES THROUGHOUT 'ld' IS NOT LESS THAN CODE MINIMUM, OR CLEAR SPACING OF BARS BEING DEVELOPED OR SPLICED IS NOT LESS THAN 2" 'db' AND CLEAR COVER IS NOT LESS THAN 'db'. FOR OTHER CASES , MULTIPLY TABULATED VALUES BY 1.5.
2. 'TOP' BARS ARE HORIZONTAL REBARS WITH MORE THAN 12 IN OF FRESH CONCRETE CAST BELOW THE BARS AT THE DEVELOPMENT LENGTH.
3. FOR LIGHT WEIGHT CONCRETE MULTIPLY THE TABULATED VALUES BY 1.3.
4. FOR EPOXY COATED BARS, MULTIPLY THE TABULATED VALUES BY 1.5 FOR 'BOT' BARS, OR BY 1.3. FOR TOP BARS.
5. FOR REINFORCEMENT OTHER THAN GRADE 60, MODIFY THE TABULATED VALUES BY THE RATIO OF THE REINFORCEMENT YIELD STRENGTH DIVIDED BY 60 KSI.
6. FOR CLASS 'A' SPLICE USE SAME AS TENSION DEVELOPMENT LENGTH.

"Ldh" TENSION DEPELOPMENT (EMBEDMENT) LENGTH FOR STANDARD END HOOKS (GRADE 60 BARS - NORMAL WEIGHT CONCRETE - GENERAL USE)

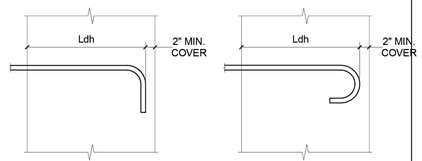

STANDARD 90 HOOK SIDE COVER > 21/2"

STANDARD 180 HOOK SIDE COVER > 21/2"

BAR SIZE	fc=3000 psi	fc=4000 psi	fc=5000 psi	fc=6000 psi
	Ldh	Ldh	Ldh	Ldh
# 3	9"	7"	7"	6"
# 4	11"	10"	9"	8"
# 5	1'-2"	1'-0"	11"	10"
# 5	1'-5"	1'-3"	1'-1"	1'-0"
# 6	1'-7"	1'-5"	1'-3"	1'-2"
# 7	1'-10"	1'-7"	1'-5"	1'-4"
# 8	2'-1"	1'-10"	1'-7"	1'-6"
# 9	2'-4"	2'-0"	1'-10"	1'-8"
# 10	2'-8"	2'-2"	2'-0"	1'-10"

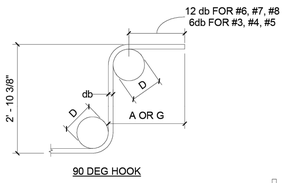

90 DEG HOOK

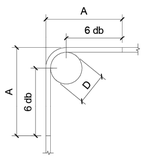

CORNER TIE HOOK

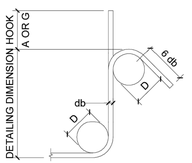

135 DEG HOOK

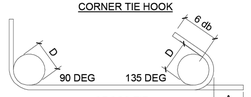

CROSS TIE

STIRRUP & TIE HOOK TYPES

BAR SIZE	D (IN.)	90 DEG HOOK A OR G (IN.)	135 DEG HOOK A OR G (IN.)
#3	1 1/2	4	4
#4	2	4 1/2	4 1/2
#5	2 1/2	6	5 1/2

NO.	DATE	REVISION	APP.

IDS Engineering Group
13430 NW. Freeway, Suite 700
Houston, Tx. 77040
713.462.3178
TxEng Firm 2726 / TxSurv Firm 10110700

CONCEPT ENGINEERS
TX. FIRM REGISTRATION # F-04417
Structures for the whole community

PRELIMINARY
NOT FOR CONSTRUCTION, BIDDING, OR PERMIT PURPOSES.
FOR REVIEW ONLY.
DAVID MOORE
TEXAS LICENSE NO. 139405
Date: 05/08/26

CITY OF HOUSTON
DEPARTMENT OF PUBLIC WORKS AND ENGINEERING

LIFT STATION RENEWAL AND REPLACEMENT FY 2023

WOODFOREST LIFT STATION
GENERAL NOTES
(SHEET 1 OF 3)

WBS NUMBER	FOR CITY OF HOUSTON USE ONLY
R-000267-0179-3	
DRAWING SCALE	
AS NOTED	
CITY OF HOUSTONPM	
DWG. NO.	NAWARAJ PANTA, P.E.
WDF-S-02	SHEET NO. 275 OF 361

IDS JOB No. 0057-085-00

FILE PATH: G:\COMMERCIAL PROJECTS\24137 - Lift Station Rehab & Construction\STRUCTURAL\JV_DWGS\XREF\24137-TBlock.dwg

PLOTTED: 5/21/2019 1:28 PM

STRUCTURAL STEEL NOTES

1. ALL STRUCTURAL STEEL MEMBERS SHALL CONFORM TO THE FOLLOWING DESIGNATION

W SHAPES	ASTM A992	(50KSI)
SQUARE RECTANGULAR TUBES	ASTM A500 GR. C	(50 KSI)
ROUND TUBES (HSS)	ASTM A500 GR. C	(46 KSI)
STEEL PIPES	ASTM A53 GR. B	(35 KSI)
CHANNELS	ASTM A36	(36 KSI)
PLATES, ANGLES, MISC, STEEL	ASTM A36	(36 KSI)
ANCHOR RODS	ASTM F1554 GR.36	(36 KSI)
HARDENED STEEL WASHERS	ASTM F436	
HEAVY HEX NUTS	ASTM A563	
SEE NOTE 16		

2. ALL STRUCTURAL STEEL SHALL BE DETAILED FABRICATED AND ERECTED IN ACCORDANCE WITH A.I.S.C. STANDARDS 15th EDITION.

3. FOR ALL HIGH STRENGTH BOLTS, HARDENED WASHERS SHALL BE PROVIDED ON NUT SIDE OF BOLT FOR TORQUING AS REQUIRED.

4. ALL WELDING SHALL CONFORM TO STANDARD OF THE AMERICAN WELDING SOCIETY, AWS D1.1 LATEST EDITION STRUCTURAL WELDING CODE

5. E70 ELECTRODES FOR ALL FIELD AND SHOP WELDING SHALL CONFORM TO ANSI/AWS D1.1 LATEST EDITION UNLESS NOTED OTHERWISE ALL WELD SIZES SHALL BE PER AISC CODE. REFER TO NOTE 17 FOR ADDITIONAL INFORMATION.

6. SPLICING STRUCTURAL MEMBERS IS PROHIBITED WITHOUT PRIOR APPROVAL OF THE STRUCTURAL ENGINEER.

7. ANY TEMPORARY SHORING OR BRACING DURING THE CONSTRUCTION PHASE BEFORE COMPLETION OF CONNECTIONS IS THE RESPONSIBILITY OF THE CONTRACTOR.

8. IF NOT SHOWN ON THE DRAWINGS, SUPPORT OF METAL DECK AROUND COLUMN CLOSURE, SCREED PLATES AROUND THE OPENINGS AND EDGE OF SLAB SHALL BE PROVIDED BY THE CONTRACTOR.

9. ALL FIELD CONNECTIONS TO BOLTED WITH A325 BOLTS. BOLTS TO BE LEJEUNE TYPE OR EQUAL. PROVIDE MINIMUM OF TWO BOLTS PER CONNECTION, MINIMUM BOLT DIAMETER 3/4".

10. ALL EXPOSED STEEL SHALL BE HOT DIPPED GALVANIZED.

11. THE BEAM-TO-BEAM AND BEAM-TO-COLUMN SIMPLE SHEAR CONNECTIONS SHOULD DEVELOP THE END REACTION OF THE CONNECTED BEAM. THE END REACTION OF THE CONNECTED BEAM CAN BE OBTAINED FROM THE LOAD CARRYING CAPACITY OF THE BEAM ON THE BASIS OF EQUIVALENT UNIFORM LOADS GIVEN IN THE PART 3 OF AISC MANUAL LATEST EDITIONS (UNLESS LARGER REACTION IS SHOWN ON DRAWINGS). THE MINIMUM SHEARING CAPACITY OF 15 KIPS SHALL BE PROVIDED FOR ALL BEAMS. REFER TO NOTE 22 FOR COMPOSITE BEAM CONNECTION REQUIREMENTS.

12. THE DESIGN OF STRUCTURAL STEEL CONNECTIONS IS THE RESPONSIBILITY OF THE CONTRACTOR AND THE STEEL FABRICATOR. THE DESIGN OF STEEL CONNECTIONS SHALL BE PERFORMED BY A REGISTERED PROFESSIONAL ENGINEER, AND SHALL BE SUBMITTED TO THE ENGINEER OF RECORD FOR REVIEW.

13. STEEL BEAM BEARING ON MASONRY SHALL HAVE A MINIMUM OF 8" BEARING AND ANCHOR AS SHOWN ON THE DRAWINGS, MASONRY SHALL ALSO HAVE SOLID MASONRY OR FULLY GROUTED CELLS FROM STEEL BEARING TO GRADE BEAM BELOW.

14. UNLESS OTHERWISE NOTED, ALL MOMENT CONNECTIONS SHALL BE MADE WITH FULL PENETRATION WELD AND SHALL BE DESIGNED TO DEVELOP FULL CAPACITY OF THE MEMBER.

15. ANY MISCELLANEOUS STEEL NOT SHOWN ON THE PLANS, BUT REQUIRED DUE TO COORDINATION BETWEEN DIFFERENT DISCIPLINES SHALL BE INCLUDED BY THE CONTRACTOR IN THEIR BID.

16. CONNECTION MATERIALS
    a. BEAM, COLUMNS, STIFFENER PLATES AND DOUBLE PLATES TO MATCH GRADE STEEL OF STRUCTURAL ELEMENT
    b. ALL CONNECTION MATERIALS, EXCEPT AS OTHERWISE NOTED HEREIN OR IN THE DRAWINGS, INCLUDING BEARING PLATES, GUSSET PLATES, STIFFENER PLATES, ETC. ASTM A36

17. WELD MINIMUM SIZE & STRENGTH
    a. PROVIDE MINIMUM SIZE OF FILLET WELDS AS SPECIFIED IN TABLE J2,4 OF AISC MANUAL.
    b. PROVIDE MINIMUM EFFECTIVE THROAT THICKNESS OF PARTIAL PENETRATION GROOVE WELDS AS SPECIFIED ON TABLE J2.3 OF AISC MANUAL
    c. DEVELOP THE FULL TENSILE STRENGTH OF THE MEMBER ELEMENT JOIN ON ALL SHOP AND FIELD WELDS U.N.O.
    d. WHERE CONNECTIONS ARE NOTED ON DRAWINGS AS MOMENT CONNECTIONS PROVIDE WELDS TO DEVELOP FULL FLEXURAL CAPACITY OF THE LESSER MEMBER.

18. PROVIDE BOLTS, NUTS AND WASHERS THAT ARE HOT DIPPED GALVANIZED ACCORDING TO ASTM A153, CLASS C WHEN USED TO CONNECT STEEL ELEMENTS THAT ARE HOT DIP GALVANIZED AFTER FABRICATION.

19. FABRICATE AND ASSEMBLE STRUCTURAL MEMBERS/ASSEMBLIES IN SHOP TO GREATEST EXTEND POSSIBLE.

20. IF CAMBER OF STRUCTURAL MEMBERS IS INDICATED ON THE DRAWINGS WHERE POSSIBLE, CAMBER OF BEAMS TO BE APPLIED BY COLD BEND PROCESS, CAMBER INDICATED IN THE DRAWINGS ARE INTENDED TO BE FINAL CAMBER AT THE TIME OF ERECTION, AND WITHIN TOLERANCE O MINUS ZERO TO PLUS 1/8" FOR EACH TEM FEET OF MEMBER LENGTH. ALL BEAMS SHALL BE INSTALLED SO THAT NATURAL OF SPECIFIC CAMBER IS ORIENTED UPWARDS.

21. CONTRACTOR SHALL BE RESPONSIBLE FOR ALL ERRORS OF DETAILING ON THE SHOP DRAWINGS, ERRORS IN FABRICATION, AND THE CORRECT FITTING OF STRUCTURAL STEEL MEMBERS.

22. FIELD MODIFICATION TO STRUCTURAL STEEL IS PROHIBITED WITHOUT PRIOR APPROVAL BY THE E.O.R.

23. CLEAN STEEL OF RUST, LOSE MILL SCALE AND OTHER FOREIGN MATERIALS WHERE REQUIRED FOR FABRICATION, FITTING UP. OR WELDING.

24. DO NOT CUT STRUCTURAL STEEL MEMBERS FOR THE WORK OF OTHER TRADES WITHOUT PRIOR REVIEW AND APPROVAL OF THE E.O.R.

25. AFTER FABRICATION, HOT DIP GALVANIZE STRUCTURAL STEEL AND THEIR CONNECTIONS PERMANENTLY EXPOSED TO THE OUTSIDE, SUCH ITEMS INCLUDE BUT ARE NOT LIMITED TO:

    1. SHELF ANGLES
    2. PARAPET WALL SUPPORTING MEMBERS
    3. SCREEN WALL SUPPORTING MEMBERS
    4. EMBEDDED PLATES IN CONCRETE
    5. BUILDING CLADDING SUPPORT STEEL.

26. EXAMINE THE ARCHITECTURAL AND STRUCTURAL DRAWINGS FOR OTHER ITEMS THAT REQUIRE HOT DIPPED GALVANIZATION

27. PROVIDE NON-SHRINK NON-METALLIC GROUT FOR BASE PLATES WITH MINIMUM 28 DAYS COMPRESSIVE STRENGTH OF 6000 PSI COMPLETE GROUT WORK BEFORE ROOF CONCENTRATED POURING OF A SINGLE STORY BUILDING.

28. STRUCTURAL STEEL CONNECTIONS NOT COMPLETELY DETAILED ON THE DRAWINGS, INCLUDING MATERIAL GRADE & SIZES, WELD SIZES AND NUMBER OF BOLTS SHALL BE DESIGNED BY THE CONTRACTOR UNDER SUPERVISION OF REGISTERED PROFESSIONAL ENGINEER WHO IS REGISTERED ON THE STATE OF TEXAS AN EMPLOYED BY STEEL FABRICATOR, DESIGN CALCULATIONS TO BE SEALED BY FABRICATOR'S REGISTERED PROFESSIONAL ENGINEER, SHOP DRAWINGS SUBMITTED WITHOUT COMPLETE DESIGN CALCULATIONS WILL NOT BE REVIEWED. WHERE PREDESIGNED CONNECTIONS ARE TAKEN DIRECTLY FROM TABLES IN AISC MANUAL. CALCULATIONS NEED TO BE SUBMITTED PROVIDED JOB DESIGN CONDITIONS PRECISELY MATCH THOSE ASSUMED IN THE AISC MANUAL.

29. FURNISH SHOP DRAWINGS FOR E.O.R.'S REVIEW PRIOR TO FABRICATION. INCLUDE WELDING PROCEDURES, TESTING PROGRAMS FOR WELDING AND HIGH STRENGTH BOLTING, COATING MATERIAL, AND ERECTION SEQUENCE IN SHOP DRAWINGS.

30. MILL STEEL COLUMNS ENDS TO FIT FLUSH WITH BASE PLATE, AND END PLATES, FIELD ASSEMBLY OF THESE STEEL ELEMENTS TO THE COLUMNS IS PROHIBITED.

31. PROVIDE HEADED STUDS (SHEAR AND ANCHOR) MADE OF MATERIAL CONFORMING TO AWS D1.1 CLAUSE 9.2.6.

32. PROVIDE DEFORMED ANCHORS MADE OF MATERIAL CONFORMING TO ASTM A1064.

33. WELD STUDS ACCORDING TO MANUFACTURER'S RECOMMENDATIONS. MANUAL ARC (STICK) WELDING OF HEADED STUDS AND/OR DEFORMED ANCHORS IS NOT ALLOWED.

34. PRIOR TO DECK PLACEMENT, VERIFY THAT STEEL BEAMS BEARING ON MASONRY HAVE 6" MINIMUM BEARING AND ARE ANCHORED S SHOWN ON DRAWINGS.

EXISTING CONSTRUCTION NOTES

1. BEFORE PROCEEDING WITH ANY WORK WITHIN THE EXISTING FACILITY, THE CONTRACTOR SHALL FAMILIARIZE HIMSELF WITH EXISTING STRUCTURAL AND OTHER CONDITIONS. IT SHALL BE THE CONTRACTOR'S RESPONSIBILITY TO PROVIDE ALL NECESSARY BRACING, SHORING, AND OTHER SAFEGUARDS TO MAINTAIN ALL PARTS OF THE EXISTING WORK IN A SAFE CONDITION DURING THE PROCESS OF CONSTRUCTION, AND TO PROTECT FROM DAMAGE THOSE PORTIONS OF THE EXISTING WORK WHICH ARE TO REMAIN.

2. THE CONTRACTOR SHALL FIELD VERIFY THE DIMENSIONS, ELEVATIONS, ETC. NECESSARY FOR THE PROPER CONSTRUCTION AND ALIGNMENT OF THE NEW PORTIONS OF THE WORK TO THE EXISTING WORK. THE CONTRACTOR SHALL MAKE ALL MEASUREMENTS NECESSARY FOR FABRICATION AND ERECTION OF STRUCTURAL MEMBERS. ANY DISCREPANCY SHALL BE IMMEDIATELY BROUGHT TO THE ATTENTION OF THE ENGINEER.

3. WELDING TO AND WITHIN AN EXISTING FACILITY PRESENTS POTENTIAL HAZARDS, INCLUDING:
    A. FIRE HAZARD DUE TO THE EXISTING CONSTRUCTION AND BUILDING CONTENTS.
    B. STRUCTURAL LIQUEFACTION DUE TO WELDING ACROSS THE FULL SECTION OF STRUCTURAL MEMBERS.RECOMMENDATIONS TO PREVENT THESE HAZARDS INCLUDE:
    A. PROTECT EXISTING COMBUSTIBLES PRIOR TO WELDING. KEEP A SEPARATE WATCHMAN AND SEVERAL FIRE EXTINGUISHERS ON HAND
    B. WELD IN SMALL INCREMENTS. ALLOW WELDS TO HARDEN BEFORE CONTINUING TO THE NEXT INCREMENT.
    C. DO NOT LEAVE THE SITE UNTIL SATISFIED THAT NO FIRE HAZARD EXISTS.

4. THE CONTRACTOR SHALL BE RESPONSIBLE FOR THE DESIGN AND ERECTION OF ALL SHORING NECESSARY TO SAFEGUARD THE EXISTING STRUCTURE. THE CONTRACTOR SHALL SUBMIT A DETAILED PLAN FOR SHORING, BRACING, AND PROTECTION OF THE EXISTING CONSTRUCTION.

DEMOLITION NOTES

1. PERFORM DEMOLITION IN A CAREFUL AND CONTROLLED MANNER TO PREVENT DAMAGE TO EXISTING STRUCTURES , UTILITES AND IMPROVEMENTS TO REMAIN.

2. CONTRACTOR SHALL BE SOLEY RESPONSIBLE FOR ALL MEANS, METHODS, SEQUENCES . PROCEDURES, AND SAFETY PRECAUTIONS ASSOCIATED WITH DEMOLITION. ENGINEER'S DRAWINGS INDICATE LIMITS OF DEMOLITION ONLY AND DO NOT PRESCRIBE HOW DEMOLITION IS TO BE PERFORMED.

3. VERIFY FIELD CONDITIONS PRIOR TO STARTING WORK. PROVIDE ALL NECESSARY BRACING, SHORING, AND TEMPORARY SUPPORTS TO PREVENT MOVEMENT OR DAMAGE TO ADJACENT OR REMAINING STRUCTURES.

4. IMMEDIATELY CEASE OPERATIONS AND NOTIFY OWNER AND ENGINEER IF MOVEMENT, SETTLEMENT, OR UNSAFE CONDITIONS ARE OBSERVED DO NOT RESUME WORK UNTIL SAFETY HAS BEEN RESTORED.

5. REMOVE ONLY PORTIONS OF CONSTRUCTION INDICATED ON THE DRAWINGS. WHERE LIMITS ARE UNCLEAR, CONFIRM EXTENT OF REMOVAL WITH ENGINEER PRIOR TO PROCEEDING.

6. PERFORM ALL WORK IN ACCORDANCE WITH LOCAL, STATE AND FEDERAL REGULATIONS INCLUDING OSHA REQUIREMENTS. MAINTAIN SAFE ACCESS AND CONTROL DUST, DEBRIS, AND NOISE AT ALL TIMES.

7. REPAIR OR REPLACE, AT NO COST TO THE OWNER, ANY DAMAGE RESULTING FROM DEMOLITION OPERATIONS OR DEMOLITION PERFORMED BEYOND THE LIMITS INDICATED.

8. ENGINEER'S RESPONSIBILITY IS LIMITED TO DEFINING THE EXTENT OF DEMOLITION. CONTRACTOR SHALL BE FULLY RESPONSIBLE FOR MEANS, METHODS SAFETY AND PRTECTION OF EXISTING STRUCTURES AND FACILITIES.

STRUCTURAL ABBREVIATIONS

AB	ANCHOR BOLT	FLR	FLOOR	PERP	PERPENDICULAR
ALT	ALTERNATIVE	FOM	FACE OF MASONRY	PL	PLATE
ALUM	ALUMINUM	FS	FAR SIDE	PLUMB	PLUMBING
ARCH	ARCHITECTURAL	FT	FOOT	PNL	PANEL
B	BOTTOM	FTG	FOOTING	POLY	POLYETHYLENE
B/	BOTTOM OF	FUT	FUTURE	PREFAB	PREFABRICATED
BLDG	BUILDING	GA	GAGE	PSF	POUNS PER SQUARE FOOT
BM	BEAM	GALV	GALVANIZED	PSI	POUNS PER SQUARE INCH
B/BOT	BOTTOM	GYP	GYPSUM	QTY	QUANTITY
BRG	BEARING	HORIZ	HORIZONTAL	R	RADIUS
C	CHANNEL SHAPE	HP	HIGH POINT	RE	CALLED RIGHT END
C TO C	CENTER TO CENTER	HSS	HOLLOW STRUCTURAL SECTION	RE:	REFERENCE
CANT	CANTILIVER	HT	HEIGHT	REINF	REINFORCE (MENT) (D)
CJ	CONTROL JOINT	IN	INCH	REQ	REQUIRE
CONST JT	CONSTRUCTION JOINT	INFO	INFORMATION	REQD	REQUIRED
CL	CENTER LINE	INT	INTERIOR	REV	REVISION
CLR	CLEAR	INSUL	INSULATION	SCHED	SCHEDULE
CMU	CONCRETE MASONRY UNIT	JB	JOIST BOTTOM / SEAT ELEVATION	SF	SQUARE FOOT
COL	COLUMN	JST	JOIST	SHT	SHEET
CONC	CONCRETE	JT	JOINT	SI	SQUARE INCH
CONN	CONNECTION	K	KIPS	SIM	SIMILAR
CONST	CONSTRUCTION	KO	KNOCK OUT	SL	SLOPE
CONT	CONTINUOUS	KSF	KIPS PER SQUARE FOOT	SOG	SLAB ON GRADE
COORD	COORDINATE	KSI	KIPS PER SQUARE INCH	SPA	SPACES (D)
CTR	CENTER	L	ANGLE	SPEC	SPECIFICATION
CTRD	CENTERED	LB	POUND	STD	STANDARD
D	DEPTH	LE	LEFT END	STIFF	STIFFENER
DBA	DEFORMED ANCHOR BAR	LG	LONG	STL	STEEL
DBL	DOUBLE	LLH	LONG LEG HORIZONTAL	SW	SHORTWAY
DBL TEE	PRECAST DOUBLE TEE	LLV	LONG LEG VERTICAL	SYM	SYMETRICAL
DIA	DIAMETER	LSH	LONG SIDE HORIZONTAL	T	TOP
DIAG	DIAGONAL	LSV	LONG SIDE VERTICAL	T/	TOP OF
DIM	DIMENSION	LP	LOW POINT	T&B	TOP AND BOTTOM
DN	DOWN	LW	LONG WAY	THK	THICK
DTL	DETAIL	M	MIDDLE	TOF	TOP OF FOOTING
DWG	DRAWING	MANUF/MFR	MANUFACTER	TOJ	TOP OF JOIST
DWL	DOWEL	MATL	MATERIAL	TOS	TOP OF STEEL
EA	EACH	MAX	MAXIMUM	TRANSV	TRANSVERSE
EE	EACH END	MECH	MECHANICAL	TYP	TYPICAL
EF	EACH FACE	MEP	MECHANICAL/ELECTRICAL/ PLUMBING	UON	UNLESS OTHERWISE NOTED
EJ	EXPANSION JOINT	MEZZ	MEZZANINE	VERT	VERTICAL
EL/ELEV	ELEVATION	MIN	MINIMUM	WF	WIDE FLANGE SHAPE
EOR	ENGINEER OF RECORD	MISC	MISCELLANEOUS	W/	WITH
EOS	EDGE OF SLAB	MO	MASONRY OPENING	W/O	WITHOUT
EQ	EQUAL	MSL	MEAN SEA LEVEL	WP	WORK POINT
EQUIP	EQUIPMENT	MTL	METAL	WS	WATERSTOP
ES	EACH SIDE	NO	NUMBER	WT	T SHAPE
EW	EACH WAY	NS	NEAR SIDE	WWF	WELDED WIRE FABRIC
EXIST	EXISTING	N.T.S.	NOT TO SCALE	&	AND
EXP	EXPANSION	OC	ON CENTER	@	AT
EXT	EXTERIOR	OC EW	ON CENTER EACH WAY	Ø	DIAMETER
FD	FLOOR DRAIN	OPNG	OPENING	#	NUMBER
FDN	FOUNDATION	OPP	OPPOSITE	±	PLUS/MINUS
FL	FULL LENGTH	PEMB	PREENGINEERRED METAL BUILDING		
FF	FINISH FLR				

NO.	DATE	REVISION	APP.

IDS Engineering Group
13430 NW. Freeway, Suite 700
Houston, Tx. 77040
713.462.3178
TxEng Firm 2726 / TxSurv Firm 10110700

CONCEPT ENGINEERS
TX. FIRM REGISTRATION # F-04417
Structures for the whole community

PRELIMINARY
NOT FOR CONSTRUCTION,
BIDDING, OR PERMIT PURPOSES.
FOR REVIEW ONLY.
DAVID MOORE
TEXAS LICENSE NO. 139405
Date: 05/08/26

CITY OF HOUSTON
DEPARTMENT OF PUBLIC WORKS AND ENGINEERING

LIFT STATION RENEWAL AND REPLACEMENT FY 2023

WOODFOREST LIFT STATION
GENERAL NOTES
(SHEET 2 OF 3)

WBS NUMBER	FOR CITY OF HOUSTON USE ONLY
R-000267-0179-3	
DRAWING SCALE	
AS NOTED	
CITY OF HOUSTONPM	
NAWARAJ PANTA, P.E.	
DWG. NO. WDF-S-03	SHEET NO. 276 OF 361

IDS JOB No. 0057-085-00

FILE PATH: G:\COMMERCIAL PROJECTS\24137 - Lift Station Rehab & Construction\STRUCTURAL\JV_DWGS\XREF\24137-TBlock.dwg

SPECIAL INSPECTIONS NOTES

THE FOLLOWING STATEMENT AND SCHEDULES OF INSPECTIONS OUTLINE THE SPECIAL INSPECTIONS AND TESTS NECESSARY FOR THIS PROJECT.
THE GENERAL CONTRACTOR SHALL HIRE AN "APPROVED AGENCY" PER THE INTERNATIONAL BUILDING CODE (IBC) SECTION 1703 TO PROVIDE SPECIAL INSPECTIONS FOR THIS PROJECT. THE QUALIFIED SPECIAL INSPECTOR SHALL REFERENCE THESE PLANS AND CHAPTER 17 OF THE IBC FOR ALL SPECIAL INSPECTION REQUIREMENTS. SPECIAL INSPECTION REPORTS SHOULD BE SUBMITTED WEEKLY.
THE APPROVED AGENCY SHALL SUBMIT COPIES OF ALL INSPECTION REPORTS TO THE ARCHITECT/ENGINEER AND THE AUTHORITY HAVING JURISDICTION (BUILDING OFFICIAL) FOR REVIEW. THE SPECIAL INSPECTION SHALL BRING DISCREPANCIES TO THE IMMEDIATE ATTENTION OF THE GENERAL CONTRACTOR FOR CORRECTION. IF THE DISCREPANCIES ARE NOT CORRECTED, THE DISCREPANCIES SHALL BE BROUGHT TO THE ATTENTION OF THE BUILDING OFFICIAL AND TO THE ARCHITECT PRIOR TO THE COMPLETION OF THAT PHASE OF THE WORK. IN ADDITION TO SPECIAL INSPECTION REPORTS AND TESTS, SUBMIT REPORTS AND CERTIFICATES NOTED IN IBC 1704.5 TO THE AUTHORITY HAVING JURISDICTION. FINAL REPORTS DOCUMENTING SPECIAL INSPECTIONS AND TESTS MUST BE SUBMITTED TO THE BUILDING OFFICIAL PER IBC 1704.2.4.

STATEMENT OF SPECIAL INSPECTIONS:

THIS SPECIAL INSPECTIONS STATEMENT HAS BEEN PREPARED WITH THE UNDERSTANDING THAT SEOR AND THE BUILDING OFFICIAL REPRESENTATIVE WILL:

- REVIEW AND ACCEPT THE QUALIFICATIONS OF THE SPECIAL INSPECTORS
- OBSERVE THE SPECIAL INSPECTION OPERATIONS TAKING PLACE AT THE PROJECT SITE TO ENSURE THAT THE SPECIAL INSPECTORS ARE COMPETENT AND CARRYING OUT THEIR ASSIGNED RESPONSIBILITIES AS SPECIFIED IN THIS STATEMENT.
- REVIEW ALL THE SPECIAL INSPECTION REPORTS THAT THE SPECIAL INSPECTOR HAS PROVIDED THEM WITH.
- CONDUCT INSPECTIONS AS SPECIFIED BY IBC SECTION 110.3

THE FOLLOWING SPECIAL INSPECTIONS APPLY TO THIS PROJECT:

- SPECIAL INSPECTIONS FOR STANDARD BUILDINGS PER IBC 1705.1 [REQUIRED]
- STORM SHELTER INSPECTIONS SHALL MATCH THE REQUIREMENTS OF THE HOST BUILDING PER SECTION 106 OF 2020 ICC-500. [REQUIRED]

SPECIAL INSPECTION OF SHOP-FABRICATED GRAVITY LOAD-BEARING MEMBERS AND ASSEMBLIES:

SPECIAL INSPECTION OF SHOP-FABRICATED GRAVITY LOAD BEARING MEMBERS & ASSEMBLIES SHALL BE PERFORMED BY THE SPECIAL INSPECTOR AS STATED IN SECTION 1704.2.5, WHICH INCLUDES THE FOLLOWING:

- BEFORE FABRICATION BEGINS, SPECIAL INSPECTORS REPRESENTING THE GENERAL CONTRACTOR NEED TO VISIT THE FABRICATOR'S SHOP TO VERIFY THAT THE FABRICATOR HAS DETAILED FABRICATION AND QUALITY CONTROL (QC) PROCEDURES IN PLACE. THESE PROCEDURES SHOULD COVER INSPECTION, WORKMANSHIP CONTROL, MATERIAL CONTROL, AND THE FABRICATOR'S ABILITY TO ADHERE TO THE APPROVED CONSTRUCTION DOCUMENTS AND REFERENCED STANDARDS.
- THE FABRICATOR MUST HAVE DETAILED PROCEDURES FOR MATERIAL CONTROL AVAILABLE FOR THE INSPECTOR TO REVIEW. THESE PROCEDURES SHOULD SHOW THAT THE FABRICATOR CAN MAINTAIN ACCURATE RECORDS AND PROCESSES SO THAT AT ANY POINT DURING FABRICATION, THE MATERIAL SPECIFICATION, GRADE, AND RELEVANT TEST REPORTS FOR PRIMARY LOAD-CARRYING MEMBERS CAN BE IDENTIFIED.

SPECIAL INSPECTION OF STRUCTURAL STEEL:

AS PER IBC SECTION 1705.2.1, A QUALIFIED SPECIAL INSPECTOR OF AN "APPROVED AGENCY" PROVIDING QUALITY ASSURANCE (QA) SPECIAL INSPECTIONS FOR THE PROJECT SHALL REVIEW AND CONFIRM THE FABRICATOR AND ERECTOR'S QUALITY CONTROL (QC) PROCEDURES FOR COMPLETENESS AND ADEQUACY RELATIVE TO AISC 360-16 CHAPTER N, AISC 303-16 CODE OF STANDARD AND PRACTICE, AWS D1.1-2015 STRUCTURAL WELDING CODE, AND 2018 IBC CODE REQUIREMENTS FOR THE FABRICATOR'S SCOPE OF WORK.

- QA AGENCY PROVIDING SPECIAL INSPECTIONS MUST EMPLOY PERSONNEL WHO MEET THE MINIMUM QUALIFICATION REQUIREMENTS FOR INSPECTION AND NONDESTRUCTIVE TESTING (NDT) AS PER AISC 360 SECTION N4.
- ENSURE THE FABRICATOR AND ERECTOR QUALITY CONTROL (QC) PROGRAM COMPLIES WITH AISC 360 SECTION N2.
- QC AND QA PERSONNEL SHALL INSPECT WELDS AND BOLTS PER THE SCHEDULE OF SPECIAL INSPECTIONS BELOW.
- ALL AWS D1.1 STRUCTURAL WELDING CODE PROVISIONS FOR STATICALLY LOADED STRUCTURES SHALL APPLY.
- NONDESTRUCTIVE TESTING (NDT) OF WELDS:
  - NON-DESTRUCTIVE TESTING (NDT) OF WELDED JOINTS PER AISC 360 N5.5
  - RISK CATEGORY FOR DETERMINATION OF THE EXTENT OF NDT PER AISC 360 N5.5B IS NOTED IN THE DESIGN CRITERIA AND LOADS SECTION OF THESE GENERAL NOTES/REQUIREMENTS. NDT MUST BE DOCUMENTED, AND REPORTS SHOULD SPECIFY THE TESTED WELD BY PIECE MARK AND LOCATION.
- ADDITIONAL INSPECTION TASKS PER AISC 360 SECTION N5.8.

POST-INSTALLED ANCHORS TO CONCRETE AND MASONRY: SHALL COMPLY WITH IBC SECTION 1703. INSPECTIONS MUST COMPLY WITH THE REQUIREMENTS IN THE APPROVED ICC EVALUATION REPORT AND THE DESIGN REQUIREMENTS SPECIFIED ON THE DRAWINGS. REFER TO THE POST INSTALLED ANCHORS SECTION OF THESE NOTES FOR ANCHORS THAT ARE THE BASIS OF THE DESIGN. THE SPECIAL INSPECTOR MUST ENSURE THAT THE ANCHORS ARE IN ACCORDANCE WITH THE POST-INSTALLED ANCHORS SECTION OF THESE NOTES OR AS SPECIFICALLY INDICATED ON THE DRAWINGS. SUBSTITUTIONS MUST BE APPROVED BY THE SER AND REQUIRE SUPPORTING CALCULATIONS AND THE CURRENT 2018 IBC-RECOGNIZED ICC EVALUATION SERVICES (ES) REPORT. SPECIAL INSPECTORS MUST DOCUMENT COMPLIANCE WITH ALL ELEMENTS REQUIRED IN THE RELEVANT ICC EVALUATION SERVICES (ES) REPORT IN THEIR SPECIAL INSPECTION REPORT.

PREFABRICATED CONSTRUCTION: ALL PREFABRICATED CONSTRUCTION SHALL CONFORM TO IBC SECTION 1703.

PER THE ICC-500, SECTION 111.1 STRUCTURAL OBSERVATION :

DURING CONSTRUCTION OF THE STORM SHELTER, THE BUILDING OWNER SHALL EMPLOY A REGISTERED DESIGN PROFESSIONAL TO CONDUCT VISUAL OBSERVATIONS OF THE CONSTRUCTION OF THE STRUCTURAL SYSTEM FOR GENERAL CONFORMANCE TO THE APPROVED CONSTRUCTION DOCUMENTS AT SIGNIFICANT CONSTRUCTION STAGES AND AT COMPLETION OF THE CONSTRUTION OF THE STRUCTURAL SYSTEM.

STRUCTURAL OBSERVATION SHALL NOT OBVIATE THE NEED FOR OTHER INSPECTIONS OR TESTING REQUIRED BY THIS STANDARD OR APPLICABLE CODE.

DEFICIENCIES SHALL BE REPORTED IN WRITING TO THE ATHORITY HAVING JURISDICTION AND OWNER OR THE OWNER'S AUTHORIZED AGENT. AT THE CONCLUSION OF THE WORK, THE REGISTERED DESIGN PROFESSIONAL WHO MADE THE STRUCTURAL OBSERVATIONS SHALL SUBMIT TO THE AUTHORITY HAVING JURISDICTION A WRITTEN STATEMENT THAT THE SITE VISITS HAVE BEEN MADE AND SHALL IDENTIFY ANY REPORTED DEFICIENCIES THAT, TO THE BEST OF THE STRUCTURAL OBSERVER'S KNOWLEDGE, HAVE NOT BEEN RESOLVED.

SECTION 110
SPECIAL INSPECTIONS

110.1 SPECIAL INSPECTIONS

SPECIAL INSPECTION SHALL BE PROVIDED IN ACCORDANCE SITH THIS SECTION, IN ADDITION TO THOSE REQUIRED BY THE *AUTHORITY HAVING JURISDICTION* IN ACCORDANCE WITH THE *APPLICABLE CODE*. ONE STATEMENT OF *SPECIAL INSPECTIONS* SHALL BE PERMITTED TO APPLY TO BOTH *HOST BUILDING* AND *STORM SHELTER* CONSTRUCTION.

EXCEPTION: PREFABRICATED OR PANELIZED *STORM SHELTER* COMPONENTS THAT HAVE BEEN INSPECTED AND *LABELED* BY AN *APPROVED AGENCY* MEETING THE REQUIREMENTS OF THE *APLICABLE CODE*.

110.1.2 SPECIAL CASES

SPECIAL INSPECTIONS SHALL BE PROVIDED FOR PROPOSED WORK COMPRISED OF THE FOLLOWING:

1. CONSTRUCTION MATERIALS AND SYSTEMS THAT ARE ALTERNATIVES TO TRADITIONAL MATERIALS AND SYSTEMS PRESCRIBED BY THE *APPLICABLE CODE*.
2. UNUSUAL DESIGN AND CONSTRUCTION APPLICATIONS.
3. ANCHORS POS-INSTALLED IN HARDENED CONCRETE AND MASONRY, WHERE USED FOR ANCHORAGE OF *STORM SHELTER* COMPONENTS FORMING A PART OF THE *STORM SHELTER* ENCLOSURE OR FOR ANCHORAGE OF THE *STORM SHELTER* STRUCTURE TO FOUNDATIONS SHALL BE IN ACCORDANCE WITH SECTION 110.1.2.1.

110.1.2.1 SPECIAL INSPECTIONS TO VERIFY ANCHOR INSTALLATION

A *SPECIAL INSPECTION* SHALL BE PROVIDED TO VERIFY THE POS-INSTALLED ANCHOR INSTALLATION AND CAPACITY IN ACCORDANCE WITH SECTION 106.2.1. FOR POST-INSTALLED ANCHORAGE TO FOUNDATIONS, *SPECIAL INSPECTION* SHALL BE PROVIDED TO VERIFY FOUNDATION ADEQUACY IN ACCORDANCE WITH SECTIONS 106.2.1 AND 307.

TABLE 1705.3
REQUIRED SPECIAL INSPECTIONS AND TESTS OF CONCRETE CONSTRUCTION

TYPE	CONTINUOUS SPECIAL INSPECTION	PERIODIC SPECIAL INSPECTION	REFERENCED STANDARD[a]	IBC REFERENCE
1. INSPECT REINFORCEMENT, INCLUDING RESTRESSING TENDONS, AND VERIFY PLACEMENT.	-	X	ACI 318: CH. 20, 25.2, 25.3, 26.6.1-26.6.3	-
2. REINFORCING BAR WELDING:				
a. VERIFY WELDABILITY OF REINFORCING BARS OTHER THAN ASTM A706;			AWS D1.4	-
b. INSPECT SINGLE-PASS FILLET WELDS, MAXIMUM 5/16"; AND	-	X	ACI 318: 26.6.4	
c. INSPECT ALL OTHER WELDS.	X	X		
3. INSPECT ANCHORS CAST IN CONCRETE.	-	X	ACI 318: 17.8.2	-
4. INSPECT ANCHORS POST-INSTALLED IN HARDENED CONCRETE MEMBERS.[B]				
a. ADHESIVE ANCHORS INSTALLED IN HORIZONTALLY OR UPWARDLY INCLINED ORIENTATIONS TO RESIST SUSTAINED TENSION LOADS.	X	X	ACI 318: 17.8.2.4	-
b. MECHANICAL ANCHORS AND ADHESIVE ANCHORS NOT DEFINED IN 4.A.			ACI 318: 17.8.2	
5. VERIFY USE OF REQUIRED DESIGN MIX.	-	X	ACI 318: CH. 19, 26.4.3, 26.4.4	-
6. PRIOR TO CONCRETE PLACEMENT, FABRICATE SPECIMENS FOR STRENGTH TESTS, PERFORM SLUMP AND AIR CONTENT TESTS, AND DETERMINE THE TEMPERATURE OF THE CONCRETE.	X		ASTM C31 ASTM C172 ACI 318: 26.5, 26.12	-
7. INSPECT CONCRETE AND SHOTCRETE PLACEMENT FOR PROPER APPLICATION TECHNIQUES.	X		ACI 318: 26.5	-
8. VERIFY MAINTENANCE OF SPECIFIED CURING TEMPERATURE AND TECHNIQUES.	-	X	ACI 318: 26.10	-
9. INSPECT PRESTRESSED CONCRETE FOR: A. APPLICATION OF PRESTRESSING FORCES; AND B. GROUTING OF BONDED PRESTRESSING TENDONS.	X X		ACI 318: CH. 20, 25.2, 25.3, 26.6.1-26.6.3	-
10. INSPECT ERECTION OF PRECAST CONCRETE MEMBERS.	-	X	ACI 318: 26.9	-
11. FOR PRECAST CONCRETE DIAPHRAGM CONNECTIONS OR REINFORCEMENT AT JOINTS CLASSIFIED AS MODERATE OR HIGH DEFORMABILITY ELEMENTS (MDE OR HDE) IN STRUCTURES ASSIGNED TO SEISMIC DESIGN CATEGORY C, D, E OR F, INSPECT SUCH CONNECTIONS AND REINFORCEMENT IN THE FIELD FOR:				
a. INSTALLATION OF THE EMBEDDED PARTS	X		ACI 318: 26.13.1.3	-
b. COMPLETION OF THE CONTINUITY OF REINFORCEMENT ACROSS JOINTS.	X		ACI 550.5	
c. COMPLETION OF CONNECTIONS IN THE FIELD.	X			
12. INSPECT INSTALLATION TOLERANCES OF PRECAST CONCRETE DIAPHRAGM CONNECTIONS FOR COMPLIANCE WITH ACI 550.5.	-	X	ACI 318: 26.13.1.3	-
13. VERIFY IN-SITU CONCRETE STRENGTH, PRIOR TO STRESSING OF TENDONS IN POST-TENSIONED CONCRETE AND PRIOR TO REMOVAL OF SHORES AND FORMS FROM BEAMS AND STRUCTURAL SLABS.	-	X	ACI 318: 26.11.2	-
14. INSPECT FORMWORK FOR SHAPE, LOCATION AND DIMENSIONS OF THE CONCRETE MEMBER BEING FORMED.	-	X	ACI 318: 26.11.1.2(b)	-

SCHEDULES OF SPECIAL INSPECTIONS:

TABLE 1705.6
REQUIRED SPECIAL INSPECTIONS AND TESTS OF SOILS

TYPE	CONTINUOUS SPECIAL INSPECTION	PERIODIC SPECIAL IN- SPECTION
1. VERIFY MATERIALS BELOW SHALLOW FOUNDATIONS ARE ADEQUATE TO ACHIEVE THE DESIGN BEARING CAPACITY.	-	X
2. VERIFY EXCAVATIONS ARE EXTENDED TO PROPER DEPTH AND HAVE REACHED PROPER MATERIAL.	-	X
3. PERFORM CLASSIFICATION AND TESTING OF COMPACTED FILL MATERIALS.	-	X
4. VERIFY USE OF PROPER MATERIALS, DENSITIES AND LIFT THICKNESSES DURING PLACEMENT AND COMPACTION OF COMPACTED FILL.	X	-
5. PRIOR TO PLACEMENT OF COMPACTED FILL, INSPECT SUBGRADE AND VERIFY THAT SITE HAS BEEN PREPARED PROPERLY.	-	X

TABLE 1705.8
REQUIRED SPECIAL INSPECTIONS AND TESTS OF CAST-IN-PLACE DEEP FOUNDATION ELEMENTS

TYPE	CONTINUOUS SPECIAL INSPECTION	PERIODIC SPECIAL INSPECTION
1. INSPECT DRILLING OPERATIONS AND MAINTAIN COMPLETE AND ACCURATE RECORDS FOR EACH ELEMENT	X	-
2. DETERMINE CAPACITIES OF TEST ELEMENTS AND CONDUCT ADDITIONAL LOAD TESTS, AS REQUIRED.	X	-
3. INSPECT DRIVING OPERATIONS AND MAINTAIN COMPLETE AND ACCURATE RECORDS FOR EACH ELEMENT	X	-

FOR DRILLED UNDERREAMED PIERS, THE SPECIAL INSPECTOR SHALL VERIFY SHAFT DIAMETER, BELL DIAMETER, PIER DEPTH, FOUNDING MATERIAL, AND CONCRETE PLACEMENT IN ACCORDANCE WITH IBC TABLE 1705.8.

MINIMUM REQUIREMENTS FOR INSPECTIONS OF STRUCTURAL STEEL CONSTRUCTION

INSPECTION TASKS	QC	QA	REFERENCED STANDARD
INSPECTION TASKS PRIOR TO WELDING			
1. Welder qualification records and continuity records	P	O	AISC 360 TABLE N5.4-1
2. Welding procedure specifications (WPSs) available	P	O	AISC 360 TABLE N5.4-1
3. Manufacturing certifications for welding consumables available	P	O	AISC 360 TABLE N5.4-1
4. Material identification (type/grade)	P	O	AISC 360 TABLE N5.4-1
5. Welder Identification system	P	O	AISC 360 TABLE N5.4-1
8. Configuration and finish of access holes	P	O	AISC 360 TABLE N5.4-1
9. Fit-up of fillet welds • Dimensions (alignment gaps at root) • Cleanliness (condition of steel surfaces) • Tacking (tack weld quality and location)	P	O	AISC 360 TABLE N5.4-1
10. Check welding equipment	P	O	AISC 360 TABLE N5.4-1
INSPECTION TASKS DURING WELDING			
1. Use of qualified welders	P	O	AISC 360 TABLE N5.4-2
2. Control and handling of welding consumables • Packaging • Exposure Control	P	O	AISC 360 TABLE N5.4-2
3. No welding over cracked track welds	P	O	AISC 360 TABLE N5.4-2
4. Environmental conditions • Wind speed within limits • Precipitation and temperature	P	O	AISC 360 TABLE N5.4-2
5. WPS followed • Settings on welding equipment • Travel speed • Selected welding materials • Shielding gas type/flowrate • Preheat applied • Interpass temperature maintained (min/max) • Proper position (F,V,H,OH)	P	O	AISC 360 TABLE N5.4-2
6. Welding techniques • Interpass and final cleaning • Each pass within profile limitations • Each pass meets quality requirements	P	O	AISC 360 TABLE N5.4-2
INSPECTION TASKS AFTER WELDING			
1. Welds cleaned	P	O	AISC 360 TABLE N5.4-3
2. Size, length, and locations of welds	P	O	AISC 360 TABLE N5.4-3
3. Welds meet visual acceptance criteria • Crack prohibition • Weld/base-metal fusion • Crater cross section • Weld profiles • Weld size • Undercut • Porosity	P	O	AISC 360 TABLE N5.4-3
4. Arc strikes	P	O	AISC 360 TABLE N5.4-3
5. k-area	P	O	AISC 360 TABLE N5.4-3
6. Weld access holes in roled heavy shapes and built-up heavy shapes	P	O	AISC 360 TABLE N5.4-3
7. Backing removed and weld tabs removed (if required)	P	O	AISC 360 TABLE N5.4-3
8. Repair activities	P	O	AISC 360 TABLE N5.4-3
9. Document acceptance or rejection of welded joint or member	P	O	AISC 360 TABLE N5.4-3
10. No prohibited welds have been added without the approval of the EOR	P	O	AISC 360 TABLE N5.4-3
INSPECTION TASKS PRIOR TO BOLTING			
1.Manufacturer's certifications available for fastener materials	P	O	AISC 360 TABLE N5.6-1
2.Fasteners marked in accordance with ASTM requirements	P	O	AISC 360 TABLE N5.6-1
3.Correct fasteners selected for the joint detail (grade, type, bolt length if threads are to be excluded from shear plane)	P	O	AISC 360 TABLE N5.6-1
4.Correct bolting procedures selected for joint detail	P	O	AISC 360 TABLE N5.6-1
5.Connecting elements, including the appropriate faying surface condition and hole preparation, if specified, meet applicable requirements.	P	O	AISC 360 TABLE N5.6-1
6.Pre-installation verification testing by installation personnel observed and documented for fastener assemblies and methods used	P	O	AISC 360 TABLE N5.6-1
7.Proper storage provided for bolts, nuts, washers and other fasteners components	P	O	AISC 360 TABLE N5.6-1
INSPECTION TASKS DURING BOLTING			
1. Fastener assemblies, of suitable condition, placed in all holes and washers are positioned as required	P	O	AISC 360 TABLE N5.6-2
2. Joint brought to the snug-tight condition prior to the pre-tensioning operation	P	O	AISC 360 TABLE N5.6-2
3. Fastener component not turned by the wrench prevented from rotating	P	O	AISC 360 TABLE N5.6-2
4. Fasteners are pre-tensioned in accordance with the RCSC Specification, progressing systematically from the most rigid point toward the free edges.	P	O	AISC 360 TABLE N5.6-2
INSPECTION TASKS AFTER BOLTING	P	O	AISC 360 TABLE N5.6-2
1. Document acceptance or rejection of bolted connections	P	O	AISC 360 TABLE N5.6-2

O - Observe these items on a random basis. Operations need not be delayed pending these inspections
P - Perform these tasks for each welded joint or member, each bolted connection, or each steel element

NO.	DATE	REVISION	APP.

IDS Engineering Group
13430 NW. Freeway, Suite 700
Houston, Tx. 77040
713.462.3178
TxEng Firm 2726 / TxSurv Firm 10110700

CONCEPT ENGINEERS
TX. FIRM REGISTRATION # F-04417
Structures for the whole community

PRELIMINARY
NOT FOR CONSTRUCTION,
BIDDING, OR PERMIT PURPOSES.
FOR REVIEW ONLY.
DAVID MOORE
TEXAS LICENSE NO. 139405
Date: 05/08/26

CITY OF HOUSTON
DEPARTMENT OF PUBLIC WORKS AND ENGINEERING

LIFT STATION RENEWAL AND REPLACEMENT FY 2023

WOODFOREST LIFT STATION
GENERAL NOTES
(SHEET 3 OF 3)

WBS NUMBER	FOR CITY OF HOUSTON USE ONLY
R-000267-0179-3	
DRAWING SCALE	
AS NOTED	
CITY OF HOUSTONPM	
NAWARAJ PANTA, P.E.	
DWG. NO. WDF-S-04	SHEET NO. 277 OF 361

IDS JOB No. 0057-085-00

PLOTTED: 5/21/2019 1:28 PM
FILE PATH: G:\COMMERCIAL PROJECTS\24137 - Lift Station Rehab & Construction\STRUCTURAL\xV_DWGS\XREF\24137-TBlock.dwg

PLOTTED: 5/21/2019 1:28 PM

EXTENT OF EXISTING SLAB REMOVAL SHALL BE A MINIMUM OF 3'-0" BEYOND THE EDGE OF THE PROPOSED ODOR CONTROL BUILDING AND CONCRETE STAIRS, TYPICAL. CONTRACTOR SHALL COORDINATE EXACT REMOVAL LIMITS AND BUILDING LOCATIONS WITH CIVIL DRAWINGS AND VERIFY ALL DIMENSIONS AND LAYOUT IN THE FIELD PRIOR TO DEMOLITION. STRUCTURAL DRAWINGS INDICATE GENERAL INTENT ONLY.

PORTION OF EXISTING SLAB-ON-GRADE TO BE REMOVED. REPLACE WITH NEW STRUCTURAL SLAB AS SHOWN ON SHEET WDF-S-06 SEE DETAIL WDF-S-08 FOR CONNECTION TO EXISTING SLAB, TYPICAL. CONTRACTOR SHALL VERIFY EXISTING CONDITIONS, INCLUDING SLAB THICKNESS, REINFORCING, AND ELEVATIONS, PRIOR TO SAWCUTTING OR REMOVAL. CONTRACTOR IS RESPONSIBLE FOR MAINTAINING STABILITY OF ADJACENT SLAB AND COORDINATING FINAL ELEVATIONS, JOINT ALIGNMENT, AND SAWCUT LOCATIONS IN THE FIELD.

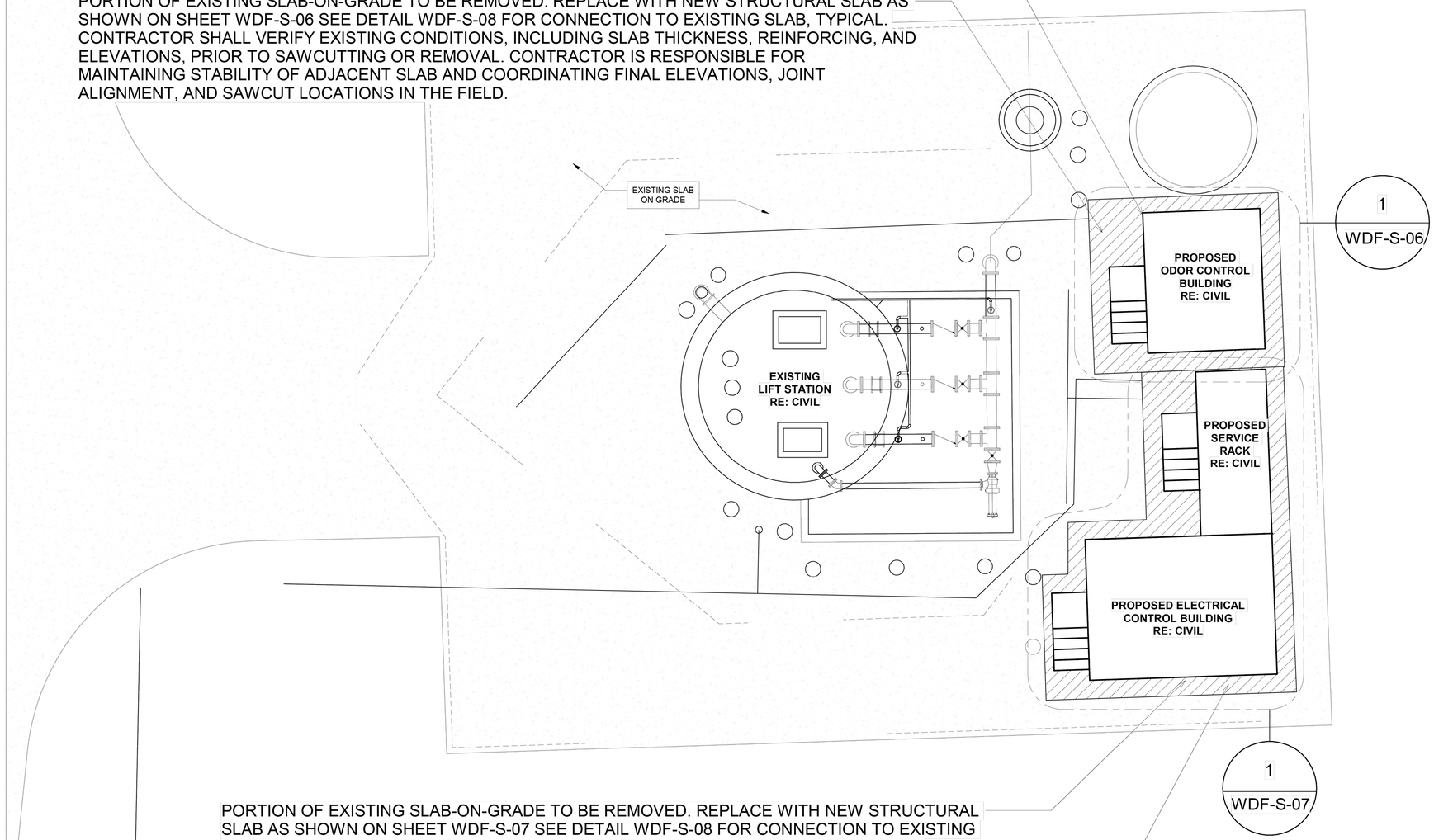

PORTION OF EXISTING SLAB-ON-GRADE TO BE REMOVED. REPLACE WITH NEW STRUCTURAL SLAB AS SHOWN ON SHEET WDF-S-07 SEE DETAIL WDF-S-08 FOR CONNECTION TO EXISTING SLAB, TYPICAL. CONTRACTOR SHALL VERIFY EXISTING CONDITIONS, INCLUDING SLAB THICKNESS, REINFORCING, AND ELEVATIONS, PRIOR TO SAWCUTTING OR REMOVAL. CONTRACTOR IS RESPONSIBLE FOR MAINTAINING STABILITY OF ADJACENT SLAB AND COORDINATING FINAL ELEVATIONS, JOINT ALIGNMENT, AND SAWCUT LOCATIONS IN THE FIELD.

EXTENT OF EXISTING SLAB REMOVAL SHALL BE A MINIMUM OF 3'-0" BEYOND THE EDGE OF THE PROPOSED ELECTRICAL CONTROL BUILDING AND CONCRETE STAIRS, TYPICAL. CONTRACTOR SHALL COORDINATE EXACT REMOVAL LIMITS AND BUILDING LOCATIONS WITH CIVIL DRAWINGS AND VERIFY ALL DIMENSIONS AND LAYOUT IN THE FIELD PRIOR TO DEMOLITION. STRUCTURAL DRAWINGS INDICATE GENERAL INTENT ONLY.

NO.	DATE	REVISION	APP.

IDS Engineering Group
13430 NW. Freeway, Suite 700
Houston, Tx. 77040
713.462.3178
TxEng Firm 2726 / TxSurv Firm 10110700

CONCEPT ENGINEERS
TX. FIRM REGISTRATION # F-04417
Structures for the whole community

PRELIMINARY
NOT FOR CONSTRUCTION, BIDDING, OR PERMIT PURPOSES.
FOR REVIEW ONLY.
DAVID MOORE
TEXAS LICENSE NO. 139405

Date: 05/08/26

CITY OF HOUSTON
DEPARTMENT OF PUBLIC WORKS AND ENGINEERING

LIFT STATION RENEWAL AND REPLACEMENT FY 2023

WOODFOREST LIFT STATION SITE PLAN

WBS NUMBER	FOR CITY OF HOUSTON USE ONLY
R-000267-0179-3	
DRAWING SCALE	
AS NOTED	
CITY OF HOUSTONPM	
NAWARAJ PANTA, P.E.	
SHEET NO. 278 OF 361	

DWG. NO. WDF-S-05

IDS JOB No. 0057-085-00

FILE PATH: G:\COMMERCIAL PROJECTS\24137 - Lift Station Rehab & Construction\STRUCTURAL\JV_DWGS\XREF\24137-TBlock.dwg

PLOTTED: 5/21/2019 1:28 PM

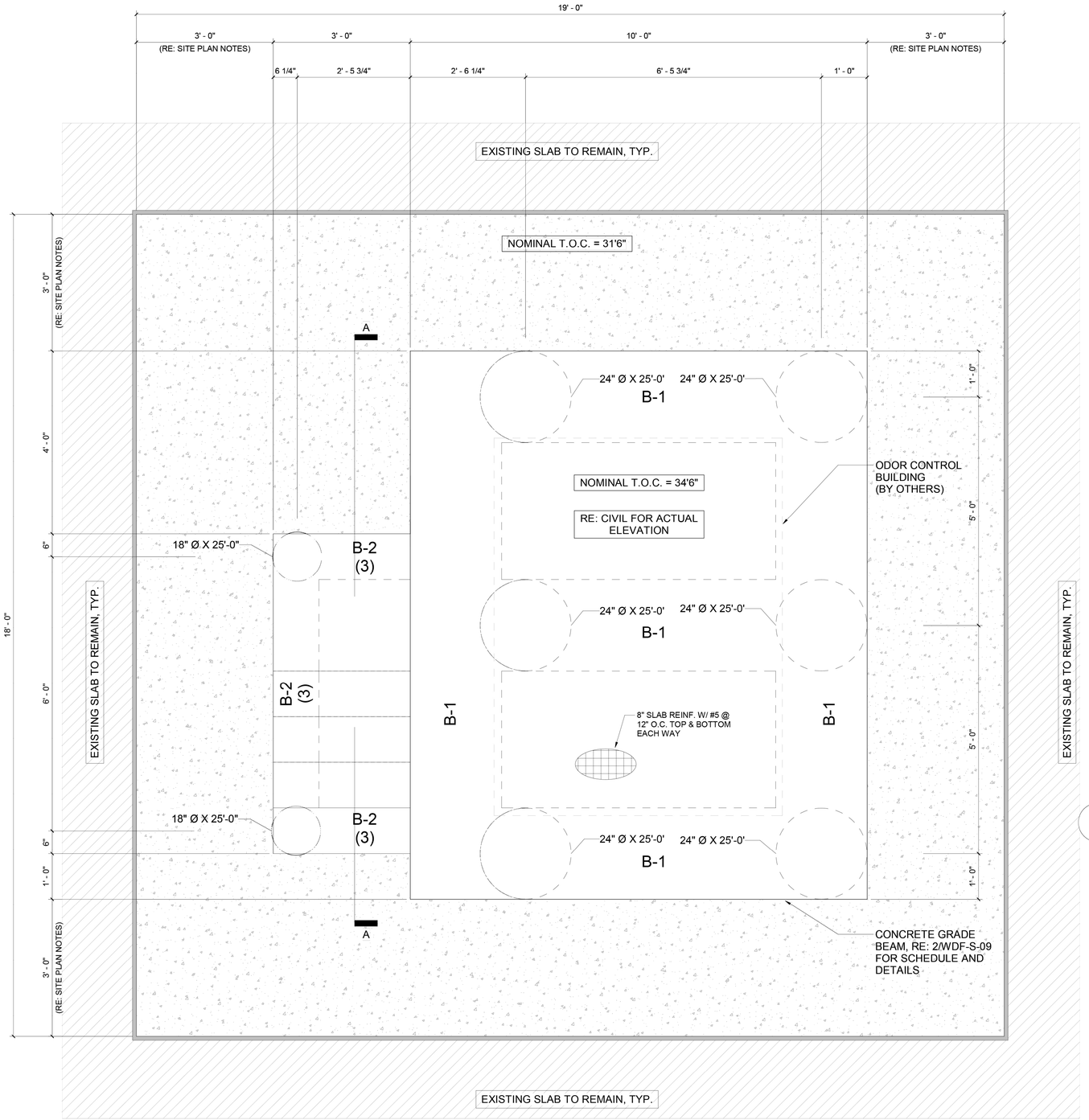

1 ODOR CONTROL BUILDING FOUNDATION PLAN
3/4" = 1'-0"

FOUNDATION NOTES:

1. CENTER ALL DRILLED SHAFTS UNDER CENTERLINE OF STEEL COLUMN. IF NO STEEL COLUMN IS SHOWN, CENTER DRILLED SHAFTS UNDER CENTER OF GRADE BEAM.
2. ALL STEEL TO BE HOT DIPPED GALVANIZED.
3. FINISH FLOOR ELEVATION = 31-6". FINISH FLOOR ELEVATION OF NEW STRUCTURAL SLAB 4'-0" MAX ABOVE EXISTING SLAB. RE: CIVIL FOR ACTUAL ELEVATION.
4. "B1" AS SHOWN ON PLAN INDICATES CONCRETE BEAM TYPE B1. THE TOP ELEVATION OF ALL BEAMS IS AT 30'-6" TYP U.N.O. REFER TO WDF-S-09 FOR BEAM SCHEDULE AND DETAILS.
5. " 18"/20'-0" " AS SHOWN ON PLAN INDICATES A DRILLED STRAIGHT SHAFT THAT IS 18" IN DIAMETER AND 20'-0" LONG MEASURED FROM BOTTOM OF FINISHED FLOOR. THE TOP ELEVATION OF ALL STRAIGHT SHAFTS ARE AT 26'-6", TYP, U.N.O. RE: WDF-S-09 FOR STRAIGHT SHAFT SCHEDULE AND DETAILS.
6. REFER TO CIVIL/MEP FOR DIMENSIONS AND LOCATIONS OF ALL SLOPED AND DEPRESSION.
7. (*) INDICATES BEAMS WITH VARYING DEPTHS. RE: SECTION
8. PORTION OF EXISTING SLAB-ON-GRADE TO BE REMOVED AND REPLACED WITH NEW STRUCTURAL SLAB AS SHOWN ON THIS SHEET. SEE DETAIL WDF-S-08 FOR CONNECTION TO EXISTING SLAB, TYPICAL. CONTRACTOR SHALL VERIFY EXISTING CONDITIONS, INCLUDING SLAB THICKNESS, REINFORCING, AND ELEVATIONS, PRIOR TO SAWCUTTING OR REMOVAL. CONTRACTOR IS RESPONSIBLE FOR MAINTAINING STABILITY OF ADJACENT SLAB AND COORDINATING FINAL ELEVATIONS, JOINT ALIGNMENT, AND SAWCUT LOCATIONS IN THE FIELD.
9. EXTENT OF EXISTING SLAB REMOVAL SHALL BE A MINIMUM OF 3'-0" BEYOND THE EDGE OF THE PROPOSED ODOR CONTROL BUILDING AND CONCRETE STAIRS, TYPICAL. CONTRACTOR SHALL COORDINATE EXACT REMOVAL LIMITS AND BUILDING LOCATIONS WITH CIVIL DRAWINGS AND VERIFY ALL DIMENSIONS AND LAYOUT IN THE FIELD PRIOR TO DEMOLITION. STRUCTURAL DRAWINGS INDICATE GENERAL INTENT ONLY.

NO.	DATE	REVISION	APP.

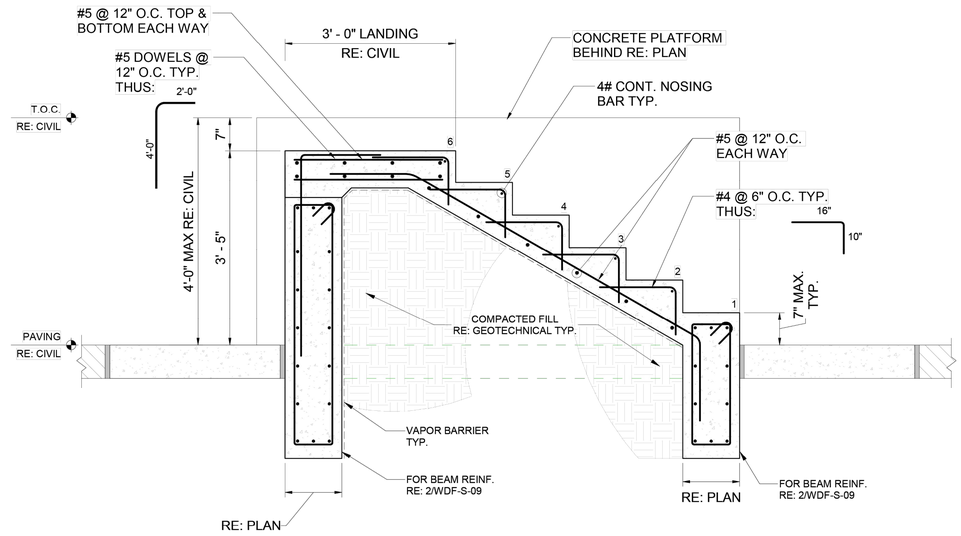

2 SECTION A - A
3/4" = 1'-0"

IDS Engineering Group
13430 NW. Freeway, Suite 700
Houston, Tx. 77040
713.462.3178
TxEng Firm 2726 / TxSurv Firm 10110700

CONCEPT ENGINEERS
TX. FIRM REGISTRATION # F-04417
Structures for the whole community

PRELIMINARY
NOT FOR CONSTRUCTION, BIDDING, OR PERMIT PURPOSES.
FOR REVIEW ONLY.
DAVID MOORE
TEXAS LICENSE NO. 139405
Date: 05/08/26

CITY OF HOUSTON
DEPARTMENT OF PUBLIC WORKS AND ENGINEERING

LIFT STATION RENEWAL AND REPLACEMENT FY 2023

WOODFOREST LIFT STATION ODOR CONTROL BUILDING FOUNDATION

WBS NUMBER	FOR CITY OF HOUSTON USE ONLY
R-000267-0179-3	
DRAWING SCALE	
AS NOTED	
CITY OF HOUSTONPM	
NAWARAJ PANTA, P.E.	

DWG. NO.	SHEET NO. 279 OF 361
WDF-S-06	

IDS JOB No. 0057-085-00

FILE PATH: G:\COMMERCIAL PROJECTS\24137 - Lift Station Rehab & Construction\STRUCTURAL\JV_DWGS\XREF\24137-TBlock.dwg

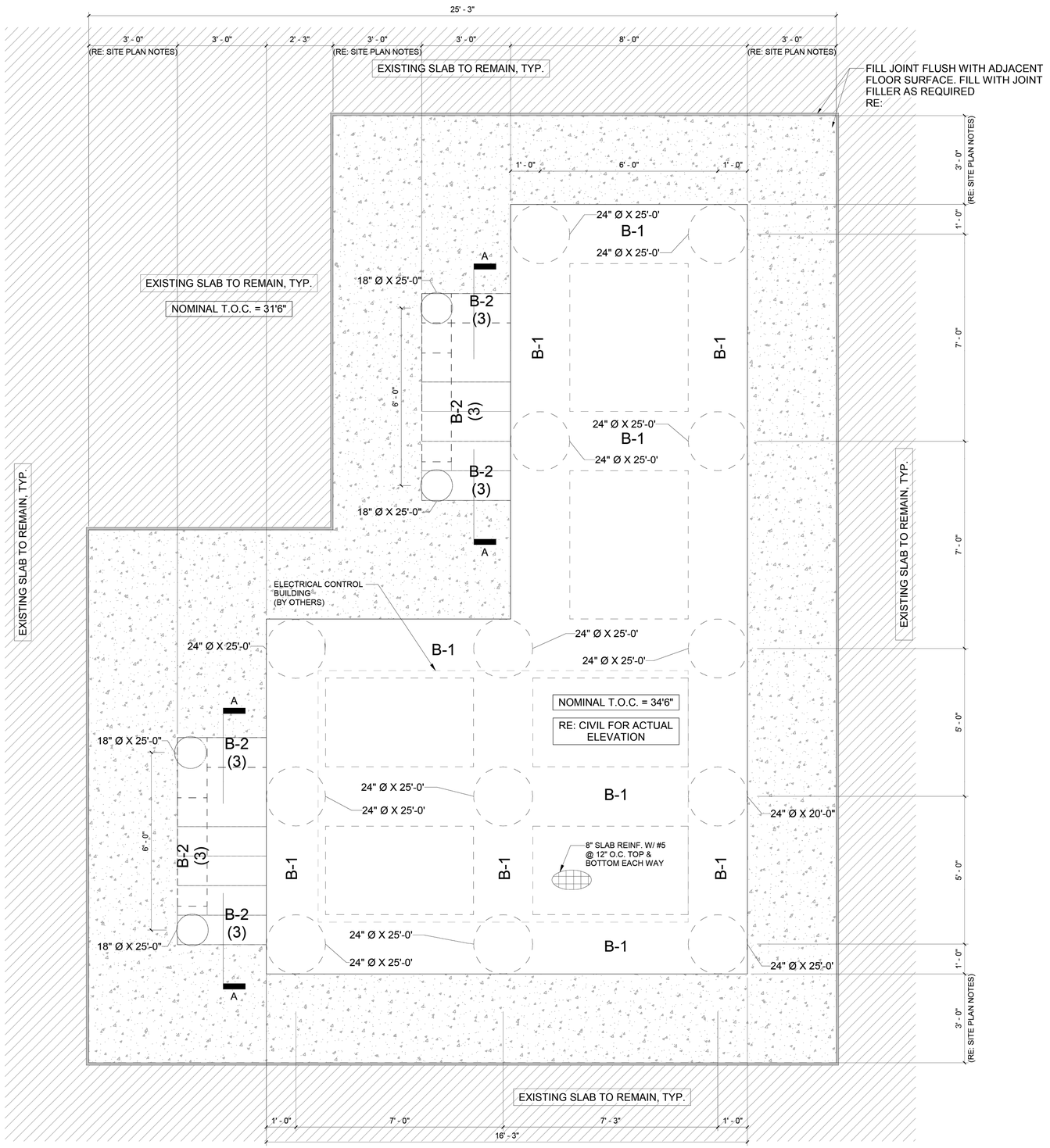

1 ELECTRICAL CONTROL BUILDING FOUNDATION PLAN

1/2" = 1'-0"

NOTES:

1. CENTER ALL DRILLED SHAFTS UNDER CENTERLINE OF STEEL COLUMN. IF NO STEEL COLUMN IS SHOWN, CENTER DRILLED SHAFTS UNDER CENTER OF GRADE BEAM.
2. ALL STEEL TO BE HOT DIPPED GALVANIZED.
3. FINISH FLOOR ELEVATION = 31'-6". FINISH FLOOR ELEVATION OF NEW STRUCTURAL SLAB 4'-0" MAX ABOVE EXISTING SLAB. RE: CIVIL FOR ACTUAL ELEVATION.
4. "B1" AS SHOWN ON PLAN INDICATES CONCRETE BEAM TYPE B1. THE TOP ELEVATION OF ALL BEAMS IS AT 30'-6" TYP U.N.O. REFER TO WDF-S-09 FOR BEAM SCHEDULE AND DETAILS.
5. " 18"/20'-0" " AS SHOWN ON PLAN INDICATES A DRILLED STRAIGHT SHAFT THAT IS 18" IN DIAMETER AND 20'-0" LONG MEASURED FROM BOTTOM OF FINISHED FLOOR. THE TOP ELEVATION OF ALL STRAIGHT SHAFTS ARE AT 26'-6", TYP, U.N.O. RE: WDF-S-09 FOR STRAIGHT SHAFT SCHEDULE AND DETAILS.
6. REFER TO CIVIL/MEP FOR DIMENSIONS AND LOCATIONS OF ALL SLOPED AND DEPRESSION.
7. (*) INDICATES BEAMS WITH VARYING DEPTHS. RE: SECTION
8. PORTION OF EXISTING SLAB-ON-GRADE TO BE REMOVED AND REPLACED WITH NEW STRUCTURAL SLAB AS SHOWN ON THIS SHEET. SEE DETAIL WDF-S-08 FOR CONNECTION TO EXISTING SLAB, TYPICAL. CONTRACTOR SHALL VERIFY EXISTING CONDITIONS, INCLUDING SLAB THICKNESS, REINFORCING, AND ELEVATIONS, PRIOR TO SAWCUTTING OR REMOVAL. CONTRACTOR IS RESPONSIBLE FOR MAINTAINING STABILITY OF ADJACENT SLAB AND COORDINATING FINAL ELEVATIONS, JOINT ALIGNMENT, AND SAWCUT LOCATIONS IN THE FIELD.
9. EXTENT OF EXISTING SLAB REMOVAL SHALL BE A MINIMUM OF 3'-0" BEYOND THE EDGE OF THE PROPOSED ELECTRICAL CONTROL BUILDING AND CONCRETE STAIRS, TYPICAL. CONTRACTOR SHALL COORDINATE EXACT REMOVAL LIMITS AND BUILDING LOCATIONS WITH CIVIL DRAWINGS AND VERIFY ALL DIMENSIONS AND LAYOUT IN THE FIELD PRIOR TO DEMOLITION. STRUCTURAL DRAWINGS INDICATE GENERAL INTENT ONLY.

NO.	DATE	REVISION	APP.

IDS Engineering Group
13430 NW. Freeway, Suite 700
Houston, Tx. 77040
713.462.3178
TxEng Firm 2726 / TxSurv Firm 10110700

CONCEPT ENGINEERS
TX. FIRM REGISTRATION # F-04417
Structures for the whole community

PRELIMINARY
NOT FOR CONSTRUCTION, BIDDING, OR PERMIT PURPOSES.
FOR REVIEW ONLY.
DAVID MOORE
TEXAS LICENSE NO. 139405
Date: 05/08/26

CITY OF HOUSTON
DEPARTMENT OF PUBLIC WORKS AND ENGINEERING

LIFT STATION RENEWAL AND REPLACEMENT FY 2023

WOODFOREST LIFT STATION ELECTRICAL CONTROL BUILDING FOUNDATION

WBS NUMBER	FOR CITY OF HOUSTON USE ONLY
R-000267-0179-3	
DRAWING SCALE	
AS NOTED	
CITY OF HOUSTONPM	
NAWARAJ PANTA, P.E.	
DWG. NO. WDF-S-07	SHEET NO. 280 OF 361

IDS JOB No. 0057-085-00

PLOTTED: 5/21/2019 1:28 PM
FILE PATH: G:\COMMERCIAL PROJECTS\24137 - Lift Station Rehab & Construction\STRUCTURAL\V_DWGS\XREF\24137-TBlock.dwg

PLOTTED: 5/21/2019 1:28 PM

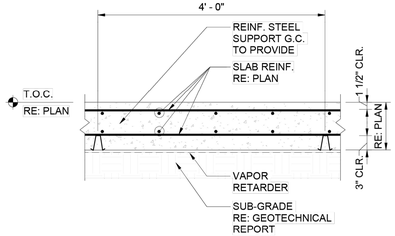

1 TYPICAL SLAB SECTION DETAIL

3/4" = 1'-0"

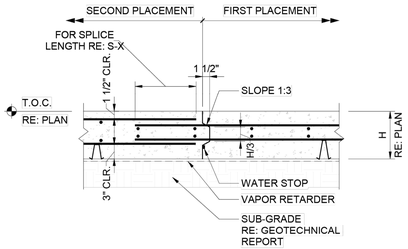

NOTE:
MAXIMUM 80 FEET BETWEEN CONSTRUCTION JOINTS AND 72 HOURS MINIMUM BETWEEN ADJACENT PLACEMENTS.

2 TYPICAL CONSTRUCTION JOINT

3/4" = 1'-0"

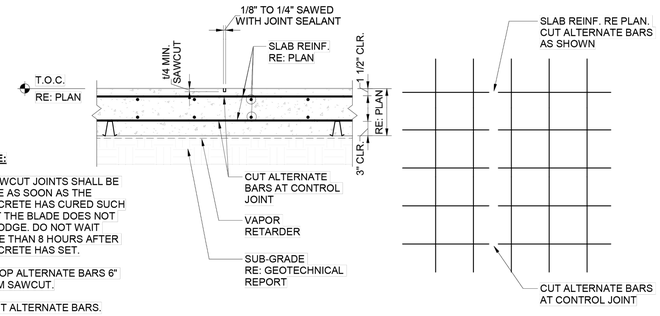

NOTE:

1. SAWCUT JOINTS SHALL BE MADE AS SOON AS THE CONCRETE HAS CURED SUCH THAT THE BLADE DOES NOT DISLODGE. DO NOT WAIT MORE THAN 8 HOURS AFTER CONCRETE HAS SET.

2. STOP ALTERNATE BARS 6" FROM SAWCUT.

3. CUT ALTERNATE BARS.

3 TYPICAL SLAB CONTROL JOINT

3/4" = 1'-0"

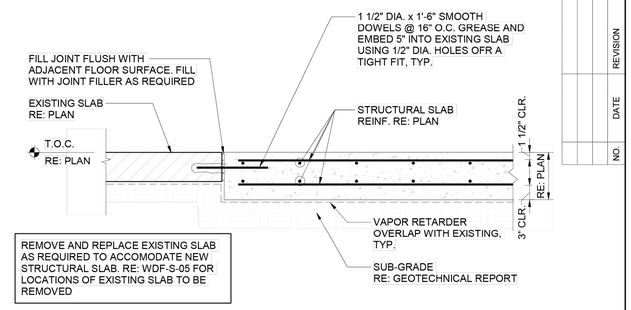

REMOVE AND REPLACE EXISTING SLAB AS REQUIRED TO ACCOMODATE NEW STRUCTURAL SLAB. RE: WDF-S-05 FOR LOCATIONS OF EXISTING SLAB TO BE REMOVED

4 TYP NEW TO EXISTING SLAB CONSTRUCTION JOINT

NO SCALE

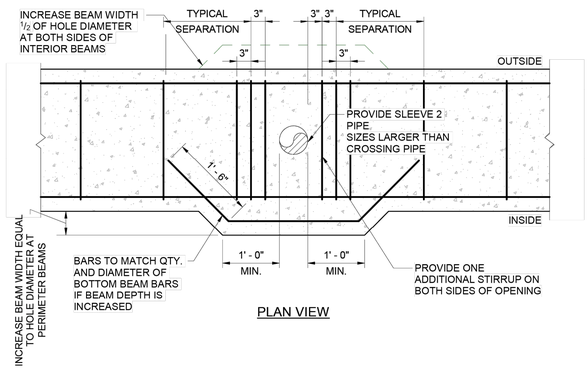

5 VERT. PIPE OPENING LARGER THAN 3" THRU GD. BM.

3/4" = 1'-0"

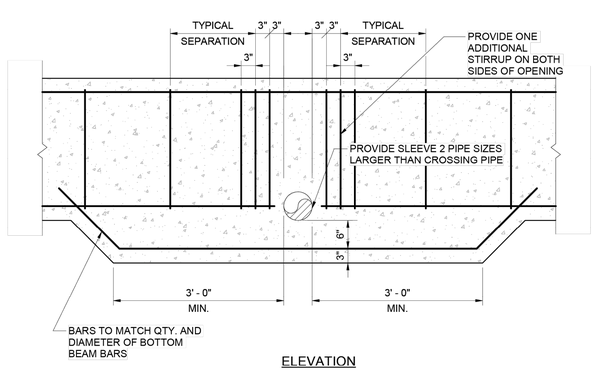

6 PIPE OPENING THRU GD. BM. IN CONFLICT W/BOT. REINF.

3/4" = 1'-0"

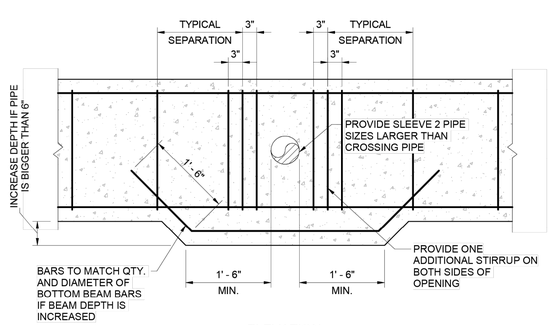

7 TYP. DETAIL PIPE OPENING THRU GRADE BEAM

3/4" = 1'-0"

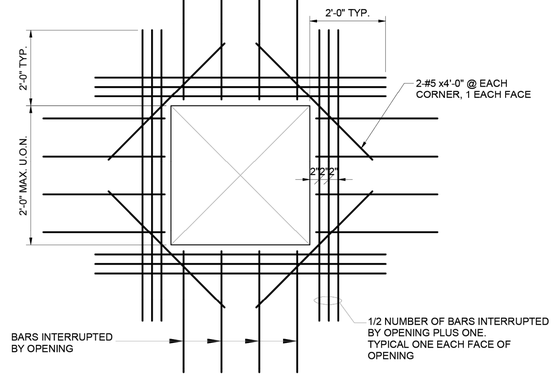

8 TYPICAL ADDITIONAL BAR PLACING DETAIL FOR SLAB

3/4" = 1'-0"

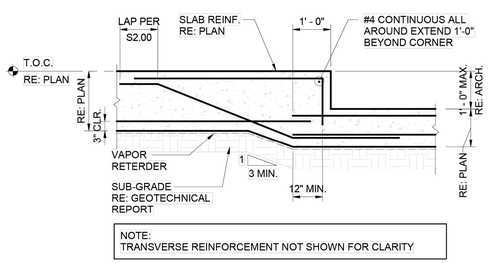

NOTE:
TRANSVERSE REINFORCEMENT NOT SHOWN FOR CLARITY

9 TYP. SLAB DEPRESSION DETAIL

1/2" = 1'-0"

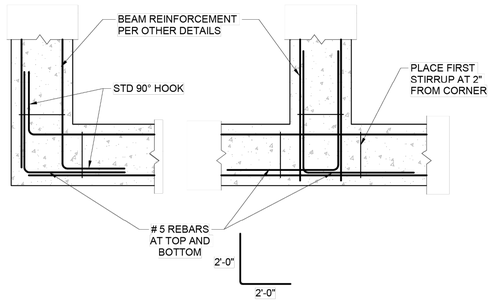

10 TYP. BAR PLACING DETAILS

3/4" = 1'-0"

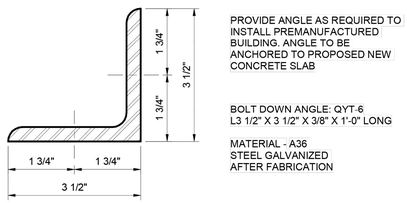

PROVIDE ANGLE AS REQUIRED TO INSTALL PREMANUFACTURED BUILDING. ANGLE TO BE ANCHORED TO PROPOSED NEW CONCRETE SLAB

BOLT DOWN ANGLE: QYT-6
L3 1/2" X 3 1/2" X 3/8" X 1'-0" LONG

MATERIAL - A36
STEEL GALVANIZED
AFTER FABRICATION

11 BOLT DOWN ANGLE

6" = 1'-0"

NO.	DATE	REVISION	APP.

IDS Engineering Group
13430 NW. Freeway, Suite 700
Houston, Tx. 77040
713.462.3178
TxEng Firm 2726 / TxSurv Firm 10110700

CONCEPT ENGINEERS
TX. FIRM REGISTRATION # F-04417
Structures for the whole community

PRELIMINARY
NOT FOR CONSTRUCTION, BIDDING, OR PERMIT PURPOSES.
FOR REVIEW ONLY.
DAVID MOORE
TEXAS LICENSE NO. 139405
Date: 05/08/26

CITY OF HOUSTON
DEPARTMENT OF PUBLIC WORKS AND ENGINEERING

LIFT STATION RENEWAL AND REPLACEMENT FY 2023

WOODFOREST LIFT STATION
TYPICAL FOUNDATION DETAILS

WBS NUMBER	FOR CITY OF HOUSTON USE ONLY
R-000267-0179-3	
DRAWING SCALE	
AS NOTED	
CITY OF HOUSTONPM	
DWG. NO.	NAWARAJ PANTA, P.E.
WDF-S-08	SHEET NO. 281 OF 361

IDS JOB No. 0057-085-00

FILE PATH: G:\COMMERCIAL PROJECTS\24137 - Lift Station Rehab & Construction\STRUCTURAL\V_DWGS\XREF\24137-TBlock.dwg

PLOTTED: 5/21/2019 1:28 PM

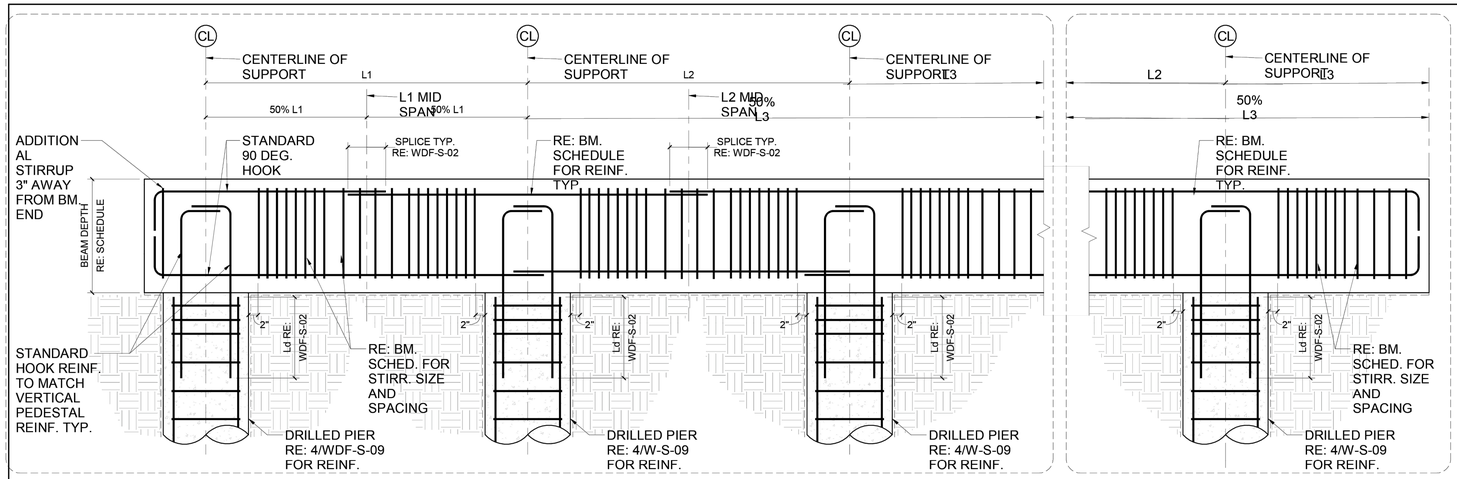

SECTION AT CONTINUOUS BEAM

SECTION AT CANTILEVERED BEAM

1 TYPICAL REINFORCEMENT SPLICE DETAIL AT BEAM (NEW DETAIL)

3/4" = 1'-0"

BEAM SCHEDULE						
TAG	WIDTH	DEPTH	TOP REINFORCEMENT	MIDDLE REINFORCEMENT	BOTTOM REINFORCEMENT	STIRRUPS
B1	2'-0"	4'-0"	(5) #7	(6) #6	(5) #7	#4 @ 10" O.C. (3 @ 3" O.C., REST @ 10" O.C.) PROVIDE #4 @ 6" O.C. IN CANTILEVERED END. HOOK LONGITUDINAL BARS IN CANTILEVERED END.
B2	1'-0"	RE: PLAN	(5) #7	(6) #6	(5) #7	#4 @ 10" O.C. (3 @ 3" O.C., REST @ 10" O.C.)

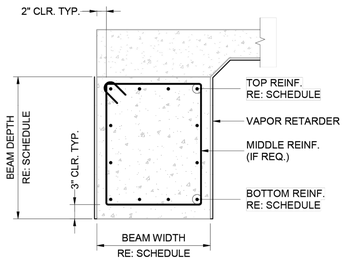

2 BEAM SCHEDULE

3/4" = 1'-0"

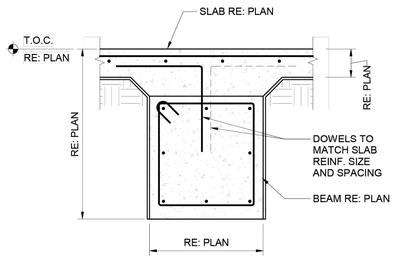

3 SECTION AT INTERIOR BEAM

3/4" = 1'-0"

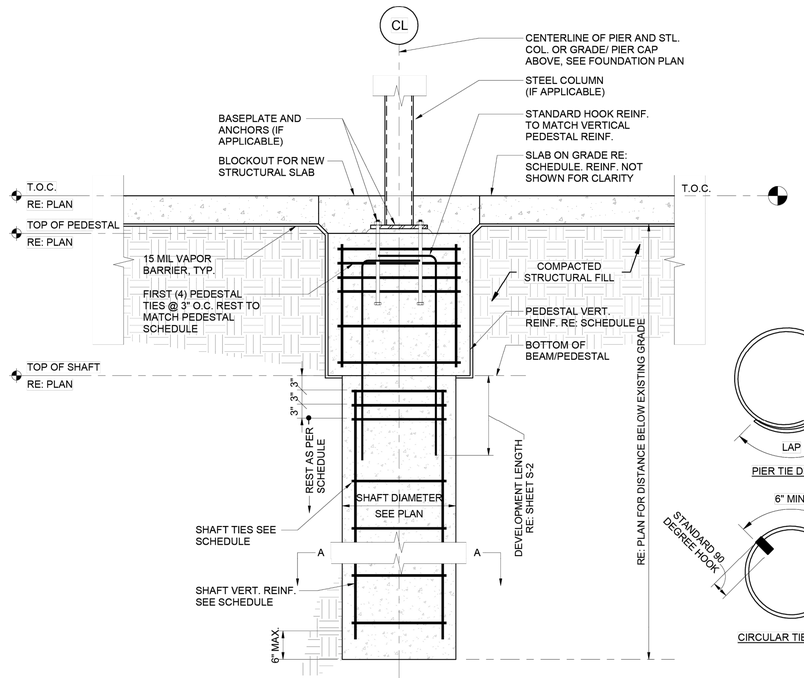

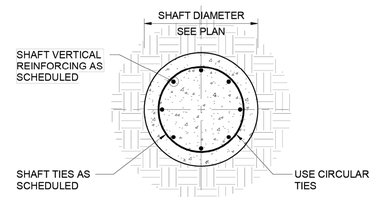

SECTION A-A

DRILLED SHAFT SCHEDULE		
SHAFT DIAMETER	VERTICAL REINF.	CLOSED TIES
18"	(6) #6	#4 @ 10" O.C.
24"	(8) #7	#4 @ 10" O.C.

4 TYPICAL STRAIGHT SHAFT DETAILS

3/4" = 1'-0"

NO.	DATE	REVISION	APP.

IDS Engineering Group
13430 NW. Freeway, Suite 700
Houston, Tx. 77040
713.462.3178
TxEng Firm 2726 / TxSurv Firm 10110700

CONCEPT ENGINEERS
TX. FIRM REGISTRATION # F-04417
Structures for the whole community

PRELIMINARY
NOT FOR CONSTRUCTION, BIDDING, OR PERMIT PURPOSES.
FOR REVIEW ONLY.
DAVID MOORE
TEXAS LICENSE NO. 139405
Date: 05/08/26

CITY OF HOUSTON
DEPARTMENT OF PUBLIC WORKS AND ENGINEERING

LIFT STATION RENEWAL AND REPLACEMENT FY 2023

WOODFOREST LIFT STATION FOUNDATION DETAILS & SCHEDULES

WBS NUMBER	FOR CITY OF HOUSTON USE ONLY
R-000267-0179-3	
DRAWING SCALE	
AS NOTED	
CITY OF HOUSTONPM	
NAWARAJ PANTA, P.E.	
DWG. NO. WDF-S-09	SHEET NO. 282 OF 361

IDS JOB No. 0057-085-00

FILE PATH: G:\COMMERCIAL PROJECTS\24137 - Lift Station Rehab & Construction\STRUCTURAL\JV_DWGS\XREF\24137-TBlock.dwg

PLOTTED: 5/12/2026 8:49 PM

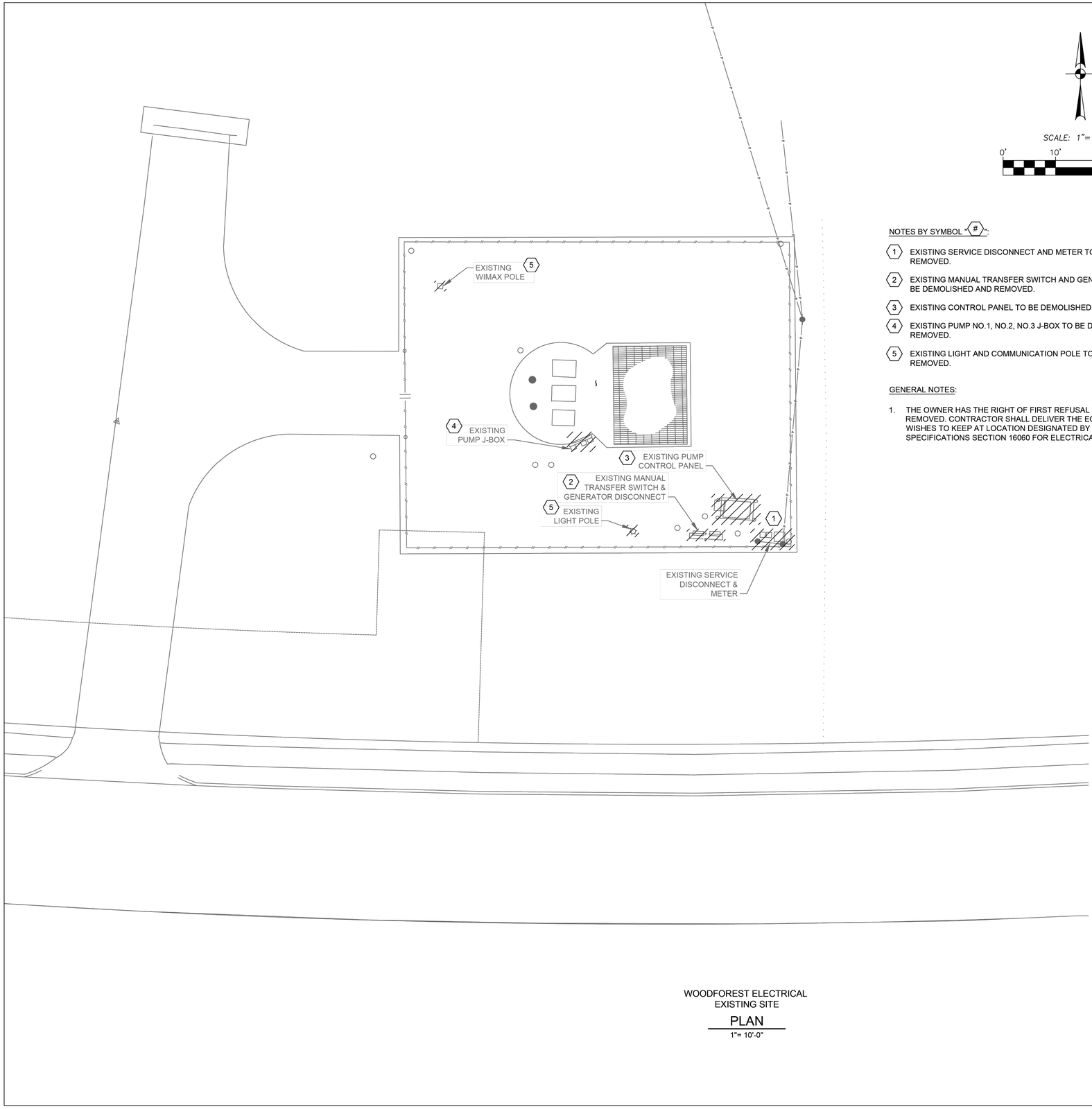

WOODFOREST ELECTRICAL
EXISTING SITE
PLAN
1"= 10'-0"

SCALE: 1"= 10'
0' 10' 20' 30'

NOTES BY SYMBOL "#":

1. EXISTING SERVICE DISCONNECT AND METER TO BE DEMOLISHED AND REMOVED.
2. EXISTING MANUAL TRANSFER SWITCH AND GENERATOR DISCONNECT TO BE DEMOLISHED AND REMOVED.
3. EXISTING CONTROL PANEL TO BE DEMOLISHED AND REMOVED.
4. EXISTING PUMP NO.1, NO.2, NO.3 J-BOX TO BE DEMOLISHED AND REMOVED.
5. EXISTING LIGHT AND COMMUNICATION POLE TO BE DEMOLISHED AND REMOVED.

GENERAL NOTES:

1. THE OWNER HAS THE RIGHT OF FIRST REFUSAL TO THE EQUIPMENT BEING REMOVED. CONTRACTOR SHALL DELIVER THE EQUIPMENT WHICH OWNER WISHES TO KEEP AT LOCATION DESIGNATED BY THE OWNER. SEE SPECIFICATIONS SECTION 16060 FOR ELECTRICAL DEMOLITION.



EXISTING SERVICE DISCONNECT, AND METER

PHOTOGRAPH A 1
NTS -

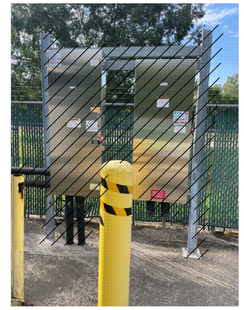

EXISTING MANUAL TRANSFER SWITCH, AND GENERATOR DISCONNECT

PHOTOGRAPH B 2
NTS -



EXISTING CONTROL PANEL

PHOTOGRAPH C 3
NTS -

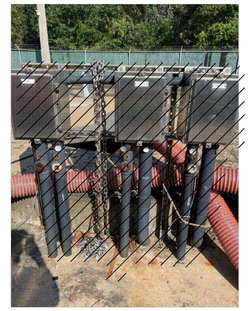

EXISTING PUMP J-BOX NO.1, NO.2, NO.3

PHOTOGRAPH D 4
NTS -



EXISTING LIGHT & COMMUNICATION POLE

PHOTOGRAPH E 5
NTS -

FOR INTERIM REVIEW
ONLY NOT INTENDED FOR
PERMIT, BIDDING OR
CONSTRUCTION PURPOSES.
ENGINEER:
HOSS FOROUZAN
P.E. SERIAL NO.77748
05/18/2026

GAI
Gupta & Associates, Inc.
CONSULTING ENGINEERING
Registration No. F-2593
302 Dennis St.,
Houston, Texas 77006
Tel: 713-636-2936
Fax: 713-636-2987
email: hforouzan@gaiconsulting.com

IDS Engineering Group
13430 NW. Freeway
Suite 700
Houston, Tx. 77040
713.462.3178
TxEng Firm 2726
TxSurv Firm 10110700

CITY OF HOUSTON
HOUSTON PUBLIC WORKS

LIFT STATION RENEWAL
AND REPLACEMENT FY 2023

WOODFOREST LIFT STATION ELECTRICAL DEMOLITION SITE PLAN

WBS NUMBER	FOR CITY OF HOUSTON USE ONLY
R-000267-0179-4	
DRAWING SCALE	
HORIZ 1"=10'-0" VERT 1"=10'-0"	
CITY OF HOUSTON PM	
NAWARAJ PANTA, P.E.	
DWG. NO. WDF-E-01	SHEET NO. 283 OF 361

NO.	DATE	REVISION	APP.

FILE PATH: O:\H8108_Lift Station Rehabilitation And Reconstruction (IDS)\6 Drawings\Electrical\Working\Woodforest\H8108_WDF-E-01.dwg

IDS JOB No. 0057-085-00

PLOTTED: 5/12/2026 8:49 PM

FILE PATH: O:\H8108_Lift Station Rehabilitation And Reconstruction (IDS)\6 Drawings\Electrical\Working\Woodforest\H8108_WDF-E-02.dwg

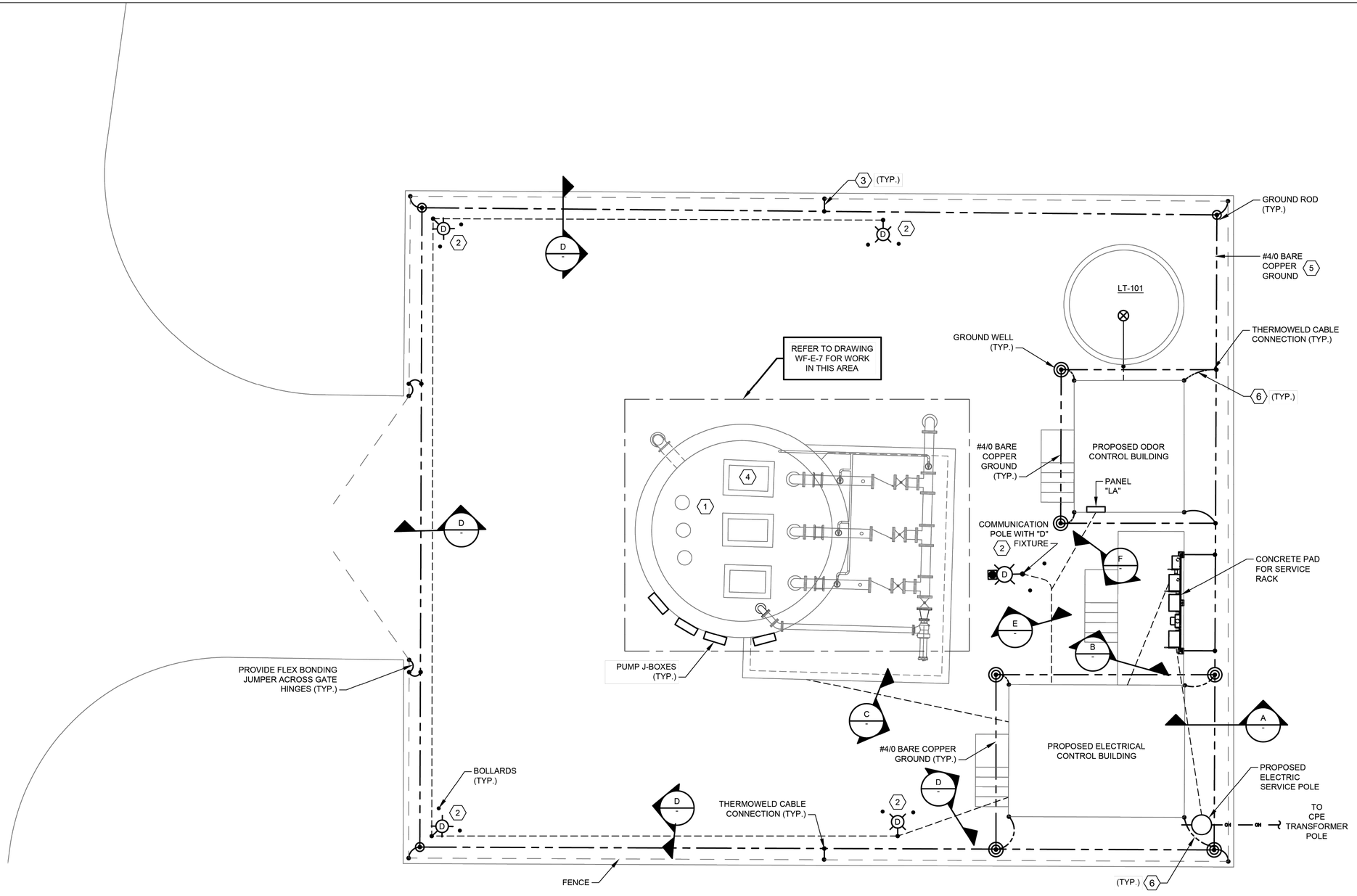

SCALE: 1"= 5'

0' 5' 10' 15'

NOTES:

1. THE ELECTRICAL INSTALLATION IN THE WET WELL SHALL BE EXPLOSION PROOF, IN ACCORDANCE WITH THE NATIONAL ELECTRICAL CODE FOR CLASS I, DIVISION 1 LOCATIONS.
2. YARD LIGHT CONTROLLED BY LIGHTING SWITCH.
3. #2/0 BARE COPPER GROUND TO BE BONDED TO FENCE POST.
4. INSIDE WETWELL RATED NEMA CLASS , DIV. 1, OUTSIDE ABOVE GROUND, AROUND WETWELL RATED CLASS 1, DIV. 2 ACCORDING TO NFPA 820.
5. GROUNDING LOOP SHALL BE BURIED 30" BELOW FINISHED GRADE.
6. #4/0 BARE COPPER GROUND TO BE BONDED TO REBAR IN CONCRETE FOOTER.

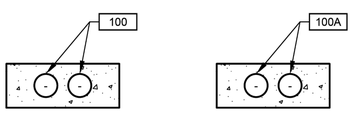

DUCTBANK SECTION A NTS

DUCTBANK SECTION B NTS

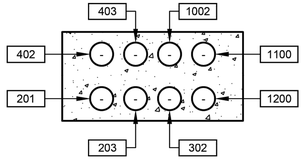

DUCTBANK SECTION C NTS

WOODFOREST ELECTRICAL PROPOSED SITE PLAN 1"= 5'-0"

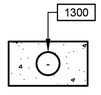

DUCTBANK SECTION D NTS

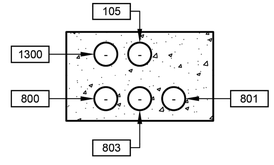

DUCTBANK SECTION E NTS

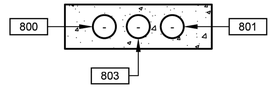

DUCTBANK SECTION F NTS

NO.	DATE	REVISION	APP.

FOR INTERIM REVIEW ONLY NOT INTENDED FOR PERMIT, BIDDING OR CONSTRUCTION PURPOSES.
ENGINEER:
HOSS FOROUZAN
P.E. SERIAL NO.77748
05/18/2026

GAI Gupta & Associates, Inc.
CONSULTING ENGINEERING
Registration No. F-2593
302 Dennis St.,
Houston, Texas 77006
Tel: 713-636-2936
Fax: 713-636-2987
email: hforouzan@gaiconsulting.com

IDS Engineering Group
13430 NW. Freeway
Suite 700
Houston, Tx. 77040
713.462.3178
TxEng Firm 2726
TxSurv Firm 10110700

CITY OF HOUSTON
HOUSTON PUBLIC WORKS

LIFT STATION RENEWAL AND REPLACEMENT FY 2023

WOODFOREST LIFT STATION PROPOSED ELECTRICAL SITE PLAN

WBS NUMBER	FOR CITY OF HOUSTON USE ONLY
R-000267-0179-4	
DRAWING SCALE	
HORIZ:1"=5'-0" VERT:1"=5'-0"	
CITY OF HOUSTON PM	
NAWARAJ PANTA, P.E.	
DWG. NO. WDF-E-02	SHEET NO. 284 OF 361

IDS JOB No. 0057-085-00

PLOTTED: 5/12/2026 8:49 PM

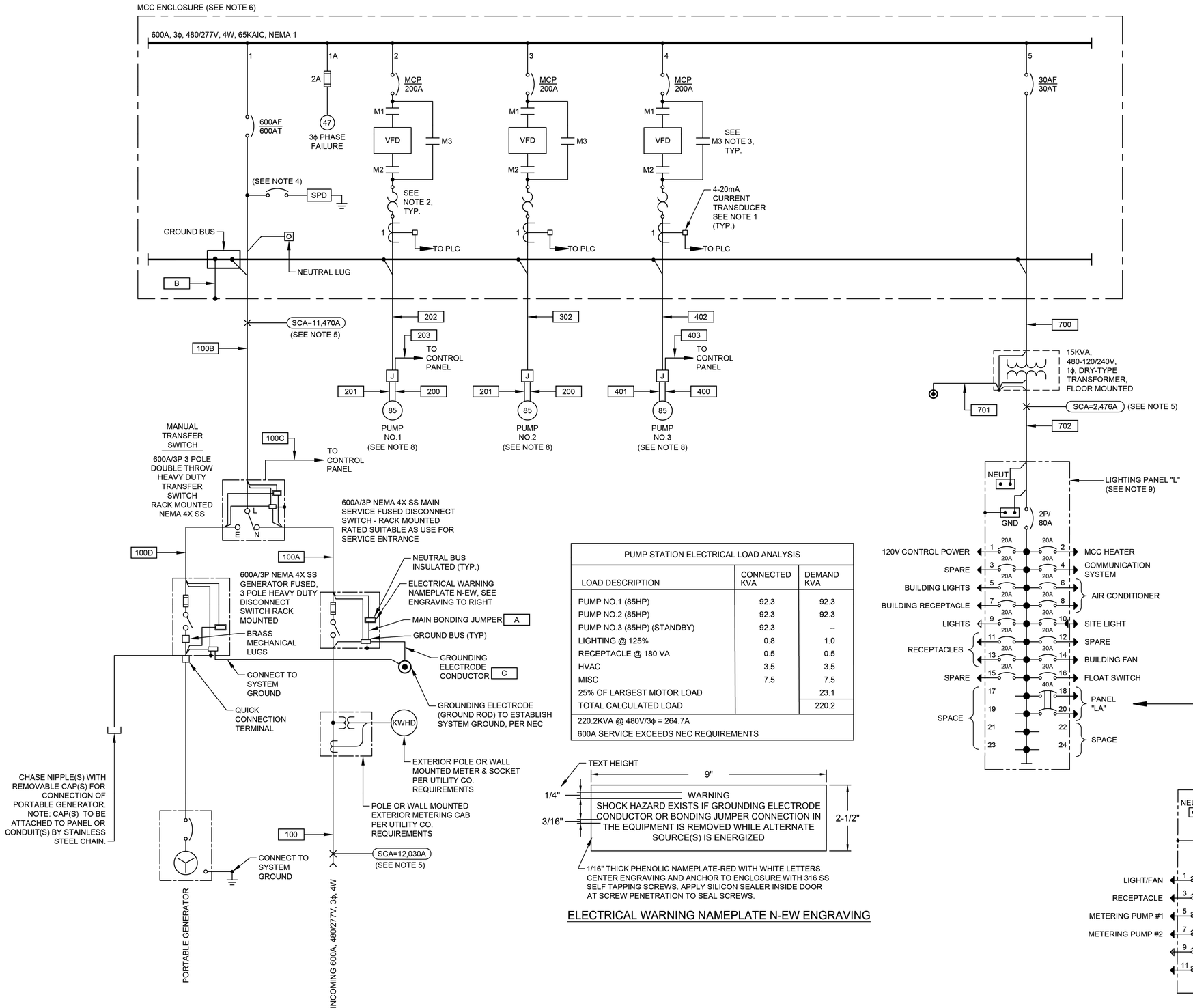

PUMP STATION ELECTRICAL LOAD ANALYSIS		
LOAD DESCRIPTION	CONNECTED KVA	DEMAND KVA
PUMP NO.1 (85HP)	92.3	92.3
PUMP NO.2 (85HP)	92.3	92.3
PUMP NO.3 (85HP) (STANDBY)	92.3	--
LIGHTING @ 125%	0.8	1.0
RECEPTACLE @ 180 VA	0.5	0.5
HVAC	3.5	3.5
MISC	7.5	7.5
25% OF LARGEST MOTOR LOAD		23.1
TOTAL CALCULATED LOAD		220.2
220.2KVA @ 480V/3ϕ = 264.7A		
600A SERVICE EXCEEDS NEC REQUIREMENTS		

ELECTRICAL WARNING NAMEPLATE N-EW ENGRAVING

NOTES:

1. PROVIDE 5A PRIMARY TO 4-20mA CURRENT TRANSDUCER.
2. COMBINATION OF CT AND OVERLOAD RELAY AS REQUIRED.
3. STARTER NEMA SIZE 3 OR GREATER SHALL BE VACUUM TYPE.
4. PROVIDE BREAKER ACCORDING TO MANUFACTURER'S REQUIREMENTS.
5. POINT TO POINT METHOD IS USED FOR SHORT CIRCUIT CURRENT CALCULATION.
6. CONTRACTOR SHALL PROVIDE A PERMANENTLY AFFIXED LABEL (2" X 3") SHOWING THE AVAILABLE FAULT CURRENT AND CALCULATION DATE. THE LABEL SHALL BE BLUE LETTERING ON A CONTRASTING BACKGROUND.
7. THE INSULATION TYPES OF ALL ELECTRICAL CONDUCTORS USED IN THE PROJECT HAVE BEEN SPECIFIED IN ELECTRICAL SPECIFICATIONS (16120, 16121, AND 16122). THE TYPES OF CONDUITS USED IN THE PROJECT HAS BEEN SPECIFIED IN ELECTRICAL SPECIFICATIONS 16111.
8. REFER TO INSTRUMENTATION DRAWINGS WDF-I-10, WDF-I-11, FOR PUMP CONTROL SCHEMATIC.
9. LIGHTING PANEL "L" 120/240V, 1ϕ, 3W, 80A MCB, 24 CIRCUITS, 10KAIC, NEMA 1.
10. LIGHTING PANEL "LA", 120/240V, 1ϕ, 3W, 40A MCB, 12 CIRCUITS, 10KAIC, NEMA 4X 316SS.

NO.	DATE	REVISION	APP.

FOR INTERIM REVIEW
ONLY NOT INTENDED FOR
PERMIT, BIDDING OR
CONSTRUCTION PURPOSES.
ENGINEER:
HOSS FOROUZAN
P.E. SERIAL NO.77748
05/18/2026

GAI
Gupta & Associates, Inc
CONSULTING ENGINEERING
Registration No. F-2593
302 Dennis St.,
Houston, Texas 77006
Tel: 713-636-2936
Fax: 713-636-2987
email: hforouzan@gaiconsulting.com

IDS Engineering Group
13430 NW. Freeway
Suite 700
Houston, Tx. 77040
713.462.3178
TxEng Firm 2726
TxSurv Firm 10110700

CITY OF HOUSTON
HOUSTON PUBLIC WORKS

LIFT STATION RENEWAL AND REPLACEMENT FY 2023

WOODFOREST LIFT STATION SINGLE LINE DIAGRAM

WBS NUMBER	FOR CITY OF HOUSTON USE ONLY
R-000267-0179-4	
DRAWING SCALE	
HORIZ: NONE VERT: NONE	
CITY OF HOUSTON PM	
NAWARAJ PANTA, P.E.	
DWG. NO. WDF-E-03	SHEET NO. 285 OF 361

IDS JOB No. 0057-085-00

FILE PATH: O:\H8108_Lift Station Rehabilitation And Reconstruction (IDS)\6 Drawings\Electrical\Working\Woodforest\H8108_WDF-E-03.dwg

PLOTTED: 5/12/2026 8:49 PM

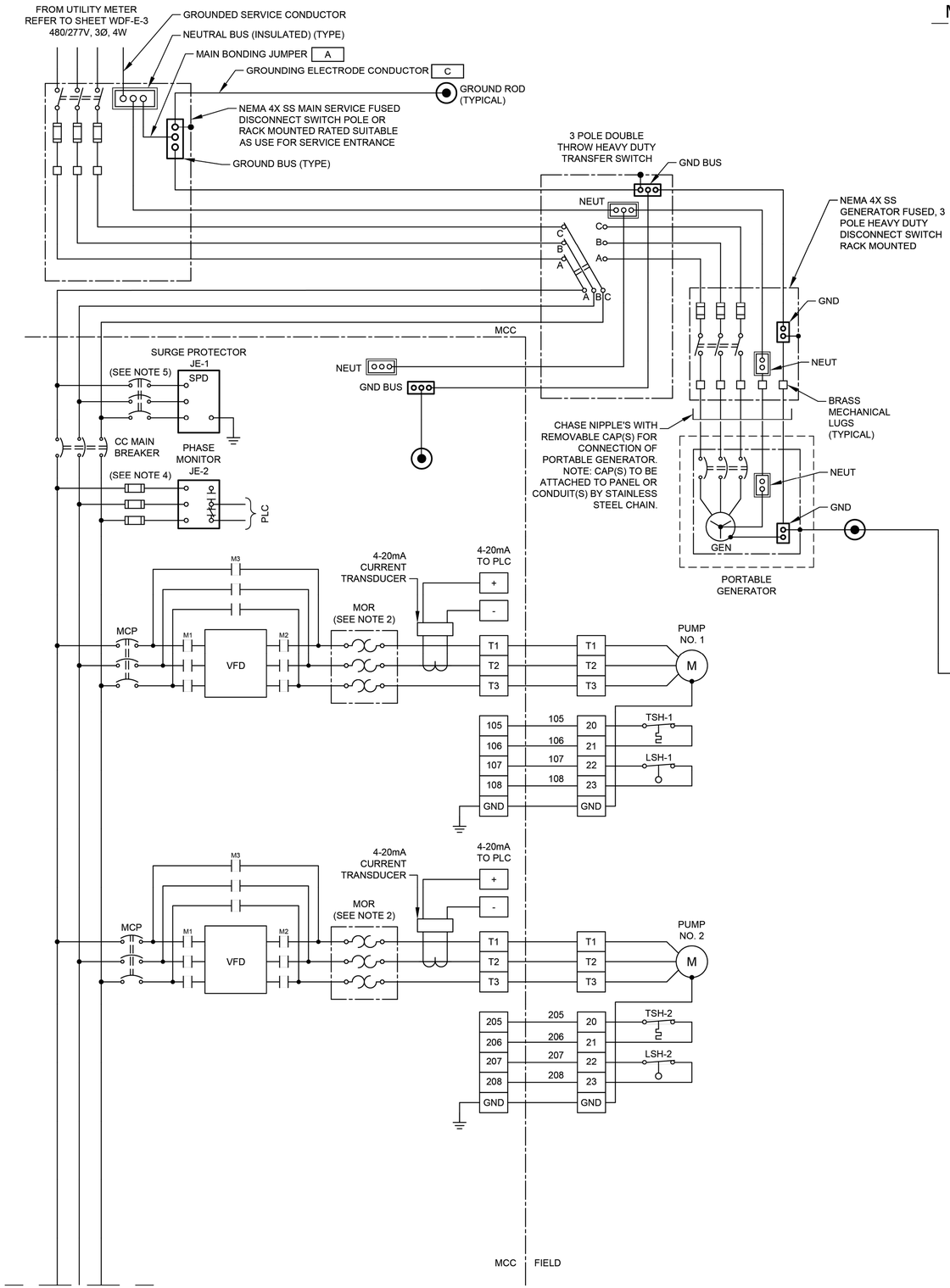

MATCHLINE `A'

MATCHLINE `A'

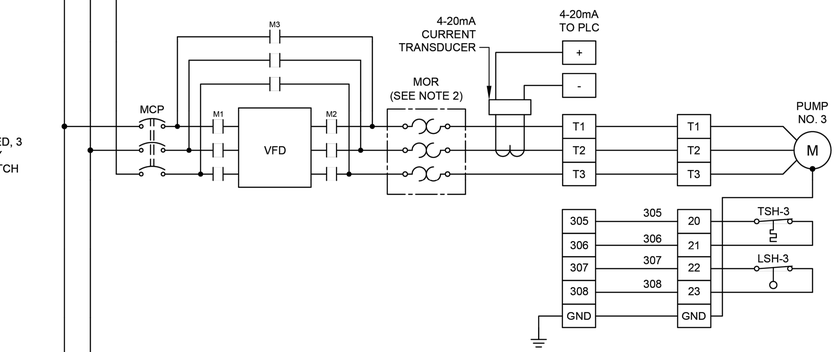

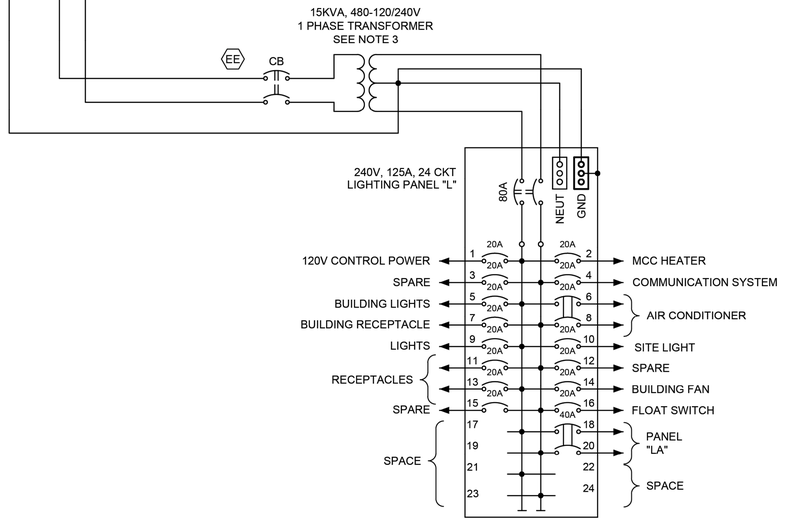

POWER WIRING DIAGRAM
NTS

NOTES:

1. UNLESS OTHERWISE INDICATE, ALL DEVICES WITHOUT FURTHER DESIGNATION ARE LOCATED AT THE CONTROL PANEL.
2. THE COMBINATION OF CT AND MOTOR OVERLOAD RELAY IF REQUIRED.
3. CONTRACTOR SHALL TERMINATE POWER & CONTROL WIRES PER MANUFACTURER'S REQUIREMENTS.
4. PROVIDE FUSE SIZE ACCORDING TO MANUFACTURER'S REQUIREMENTS.
5. PROVIDE BREAKER SIZE ACCORDING TO MANUFACTURER'S REQUIREMENTS.

GENERAL NOTES:

1. NO ELECTRICAL MATERIAL, APPARATUS, DEVICES, APPLIANCES, FIXTURES, OR EQUIPMENT SHALL BE SOLD OR INSTALLED IN THE CITY UNLESS THEY ARE IN CONFORMANCE WITH THE PROVISIONS OF SECTION 508 CITY OF HOUSTON ELECTRICAL CODE, THE LAWS OF THE STATE OF TEXAS AND ANY APPLICABLE RULES AND REGULATIONS ISSUED UNDER THE AUTHORITY OF THE STATE STATUES. THE MAKER'S NAME, TRADEMARK, OR OTHER IDENTIFICATION SYMBOL SHALL BE PLACED ON ALL ELECTRICAL MATERIALS, APPARATUS, DEVICES, APPLIANCES, FIXTURES, AND EQUIPMENT USED OR INSTALLED UNDER THE PROVISIONS OF THIS CODE. ALL ELECTRICAL MATERIALS AND EQUIPMENT SHALL BE LISTED AND LABELED FOR THE INTENDED USE AND SHALL BE INCLUDED IN A LIST PUBLISHED BY AN APPROVAL AGENCY.

NO.	DATE	REVISION	APP.

FOR INTERIM REVIEW
ONLY NOT INTENDED FOR
PERMIT, BIDDING OR
CONSTRUCTION PURPOSES.
ENGINEER:
HOSS FOROUZAN
P.E. SERIAL NO.77748
05/18/2026

GAI
Gupta & Associates, Inc.
CONSULTING ENGINEERING
Registration No. F-2593
302 Dennis St.,
Houston, Texas 77006
Tel: 713-636-2936
Fax: 713-636-2987
email: hforouzan@gaiconsulting.com

IDS Engineering Group
13430 NW. Freeway
Suite 700
Houston, Tx. 77040
713.462.3178
TxEng Firm 2726
TxSurv Firm 10110700

CITY OF HOUSTON
HOUSTON PUBLIC WORKS

LIFT STATION RENEWAL
AND REPLACEMENT FY 2023

WOODFOREST LIFT STATION
THREE–LINE DIAGRAM

WBS NUMBER	FOR CITY OF HOUSTON USE ONLY
R–000267–0179–4	
DRAWING SCALE	
HORIZ: NONE VERT: NONE	
CITY OF HOUSTON PM	
NAWARAJ PANTA, P.E.	
SHEET NO. 286 OF 361	

DWG. NO. WDF–E–04

IDS JOB No. 0057-085-00

FILE PATH: O:\H8108_Lift Station Rehabilitation And Reconstruction (IDS)\6 Drawings\Electrical\Working\Woodforest\H8108_WDF-E-04.dwg

PLOTTED: 5/12/2026 8:49 PM

FILE PATH: O:\H8108_Lift Station Rehabilitation And Reconstruction (IDS)\6 Drawings\Electrical\Working\Woodforest\H8108_WDF-E-05.dwg

PUMP NO.	CKT. NO.
1 2 3	2 3 4

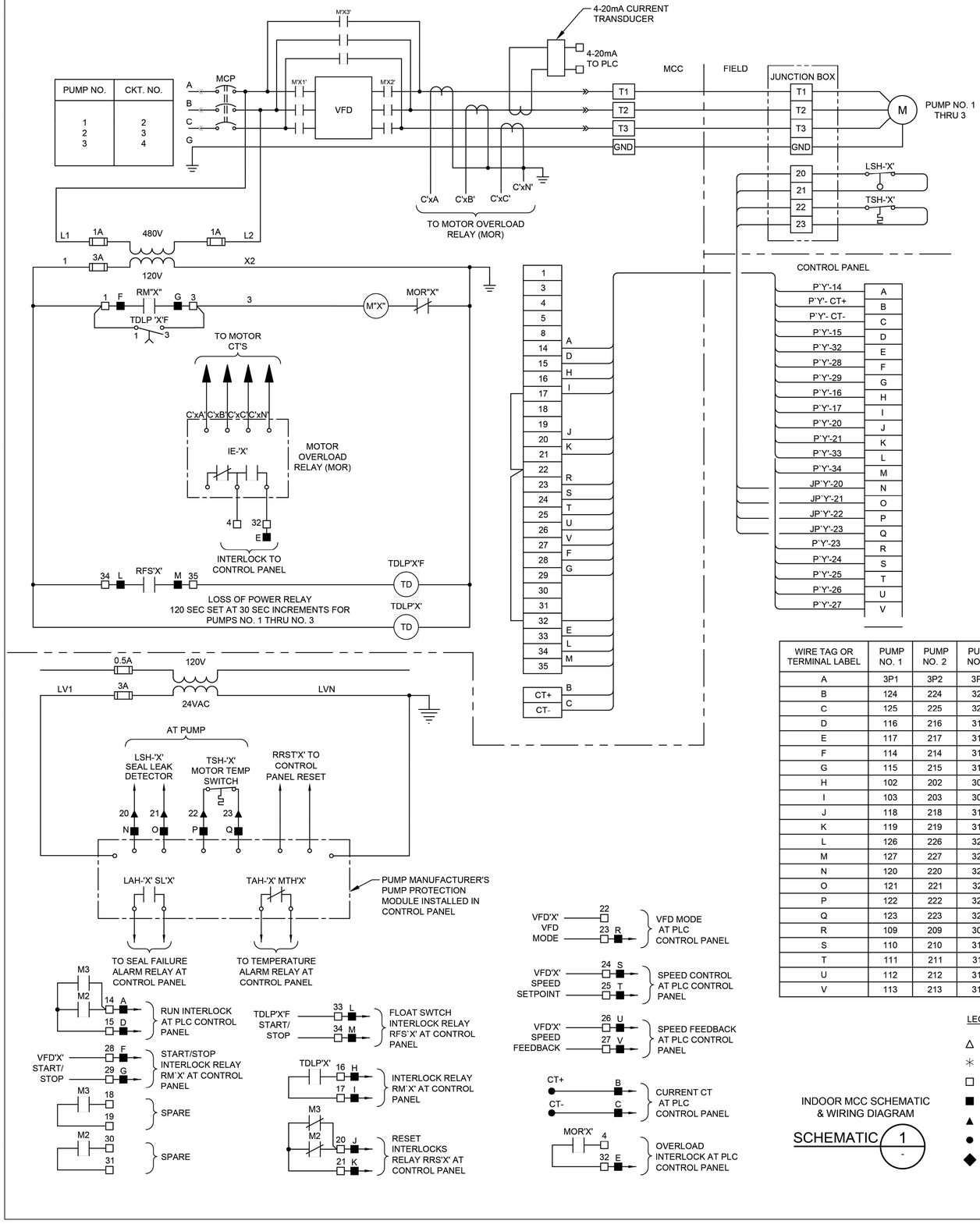

WIRE TAG OR TERMINAL LABEL	PUMP NO. 1	PUMP NO. 2	PUMP NO. 3	FUNCTION
A	3P1	3P2	3P3	24VDC CONTROL
B	124	224	324	4-20mA CURRENT TRANSDUCER
C	125	225	325	4-20mA CURRENT TRANSDUCER
D	116	216	316	M CONTACT
E	117	217	317	OVERLOAD ALARM
F	114	214	314	RUN INTERLOCK
G	115	215	315	RUN INTERLOCK
H	102	202	302	LOSS OF POWER TIMER
I	103	203	303	LOSS OF POWER TIMER
J	118	218	318	ALARM RESET INTERLOCK
K	119	219	319	ALARM RESET INTERLOCK
L	126	226	326	FLOAT SWITCH RUN INTERLOCK
M	127	227	327	FLOAT SWITCH RUN INTERLOCK
N	120	220	320	SEAL LEAK DETECTOR
O	121	221	321	SEAL LEAK DETECTOR
P	122	222	322	MOTOR TEMPERATURE SWITCH
Q	123	223	323	MOTOR TEMPERATURE SWITCH
R	109	209	309	VFD MODE
S	110	210	310	4-20mA VFD SPEED CONTROL
T	111	211	311	4-20mA VFD SPEED CONTROL
U	112	212	312	4-20mA VFD SPEED INDICATION
V	113	213	313	4-20mA VFD SPEED INDICATION

INDOOR MCC SCHEMATIC & WIRING DIAGRAM

SCHEMATIC 1 / -

LEGEND

- △ DEVICE OR FIELD TERMINAL LOCATED AT MOTOR
- ✳ DEVICE OR FIELD TERMINAL LOCATED REMOTE
- □ DEVICE OR FIELD TERMINAL LOCATED AT POWER PANEL
- ■ FIELD TERMINAL LOCATED AT CONTROL PANEL
- ▲ REMOTE TERMINAL
- ● DEVICE TERMINAL NO.
- ◆ PC INTERFACE TERMINAL

NO.	DATE	REVISION	APP.

FOR INTERIM REVIEW
ONLY NOT INTENDED FOR
PERMIT, BIDDING OR
CONSTRUCTION PURPOSES.
ENGINEER:
HOSS FOROUZAN
P.E. SERIAL NO.77748
05/18/2026

GAI
Gupta & Associates, Inc
CONSULTING ENGINEERING
Registration No. F-2593
302 Dennis St.,
Houston, Texas 77006
Tel: 713-636-2936
Fax: 713-636-2987
email: hforouzan@gaiconsulting.com

IDS Engineering Group
13430 NW. Freeway
Suite 700
Houston, Tx. 77040
713.462.3178
TxEng Firm 2726
TxSurv Firm 10110700

CITY OF HOUSTON
HOUSTON PUBLIC WORKS

LIFT STATION RENEWAL AND REPLACEMENT FY 2023

WOODFOREST LIFT STATION MCC SCHEMATIC & WIRING DIAGRAM

WBS NUMBER	FOR CITY OF HOUSTON USE ONLY
R-000267-0179-4	
DRAWING SCALE	
HORIZ: NONE VERT: NONE	
CITY OF HOUSTON PM	
NAWARAJ PANTA, P.E.	
SHEET NO. 287 OF 361	

DWG. NO. WDF-E-05

IDS JOB No. 0057-085-00

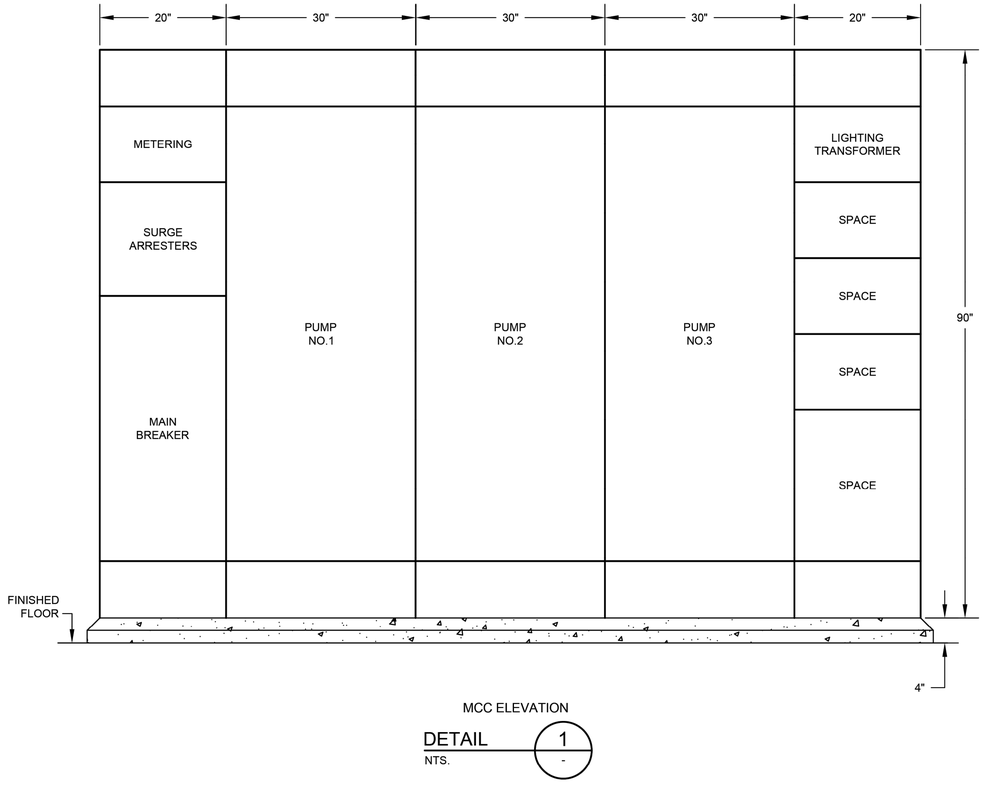

MCC ELEVATION

DETAIL 1
NTS. -

NO.	DATE	REVISION	APP.

FOR INTERIM REVIEW ONLY NOT INTENDED FOR PERMIT, BIDDING OR CONSTRUCTION PURPOSES.
ENGINEER:
HOSS FOROUZAN
P.E. SERIAL NO.77748
05/18/2026

GAI
Gupta & Associates, Inc.
CONSULTING ENGINEERING
Registration No. F-2593
302 Dennis St.,
Houston, Texas 77006
Tel: 713-636-2936
Fax: 713-636-2987
email: hforouzan@gaiconsulting.com

IDS Engineering Group
13430 NW. Freeway
Suite 700
Houston, Tx. 77040
713.462.3178
TxEng Firm 2726
TxSurv Firm 10110700

CITY OF HOUSTON
HOUSTON PUBLIC WORKS

LIFT STATION RENEWAL AND REPLACEMENT FY 2023

WOODFOREST LIFT STATION MCC ELEVATION

WBS NUMBER	FOR CITY OF HOUSTON USE ONLY
R-000267-0179-4	
DRAWING SCALE	
HORIZ: NTS VERT: NTS	
CITY OF HOUSTON PM	
NAWARAJ PANTA, P.E.	
SHEET NO. 288 OF 361	

DWG. NO. WDF-E-06

IDS JOB No. 0057-085-00

PLOTTED: 5/12/2026 8:49 PM

FILE PATH: O:\H8108_Lift Station Rehabilitation And Reconstruction (IDS)\6 Drawings\Electrical\Working\Woodforest\H8108_WDF-E-06.dwg

PLOTTED: 5/12/2026 8:49 PM

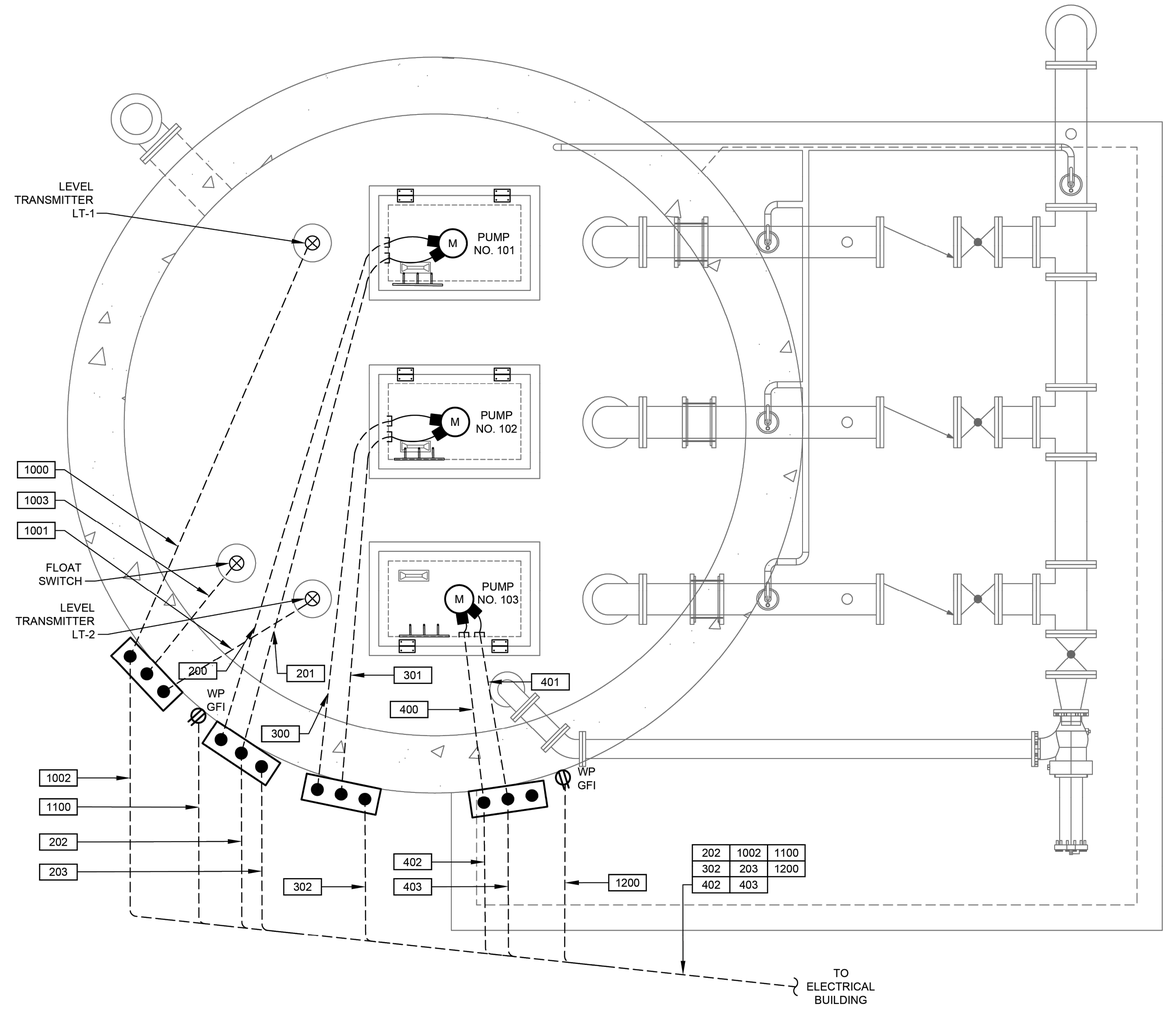

WOODFOREST LIFT STATION
ENLARGED ELECTRICAL PLAN

PLAN

1/2"= 1'-0"

1 0 1 2 3

SCALE: 1/2" = 1'-0"

NO.	DATE	REVISION	APP.

FOR INTERIM REVIEW
ONLY NOT INTENDED FOR
PERMIT, BIDDING OR
CONSTRUCTION PURPOSES.
ENGINEER:
HOSS FOROUZAN
P.E. SERIAL NO.77748
05/18/2026

GAI
Gupta & Associates, Inc.
CONSULTING ENGINEERING
Registration No. F-2593
302 Dennis St.,
Houston, Texas 77006
Tel: 713-636-2936
Fax: 713-636-2987
email: hforouzan@gaiconsulting.com

IDS Engineering Group
13430 NW. Freeway
Suite 700
Houston, Tx. 77040
713.462.3178
TxEng Firm 2726
TxSurv Firm 10110700

CITY OF HOUSTON

HOUSTON PUBLIC WORKS

LIFT STATION RENEWAL
AND REPLACEMENT FY 2023

WOODFOREST LIFT STATION ENLARGED ELECTRICAL PLAN

WBS NUMBER	FOR CITY OF HOUSTON USE ONLY
R-000267-0179-4	
DRAWING SCALE	
HORIZ. 1/2"=1'-0" VERT. 1/2"=1'-0"	
CITY OF HOUSTON PM	
NAWARAJ PANTA, P.E.	
SHEET NO. 289 OF 361	

DWG. NO. WDF-E-07

FILE PATH: O:\H8108_Lift Station Rehabilitation And Reconstruction (IDS)\6 Drawings\Electrical\Working\Woodforest\H8108_WDF-E-07.dwg

IDS JOB No. 0057-085-00

PLOTTED: 5/12/2026 8:49 PM

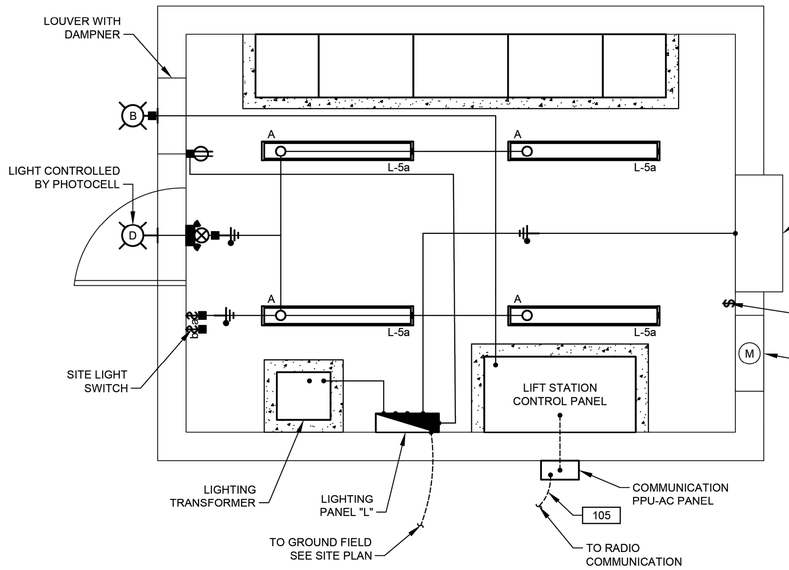

LIGHTING & COMMUNICATION SYSTEM PLAN

1/2"=1'-0"

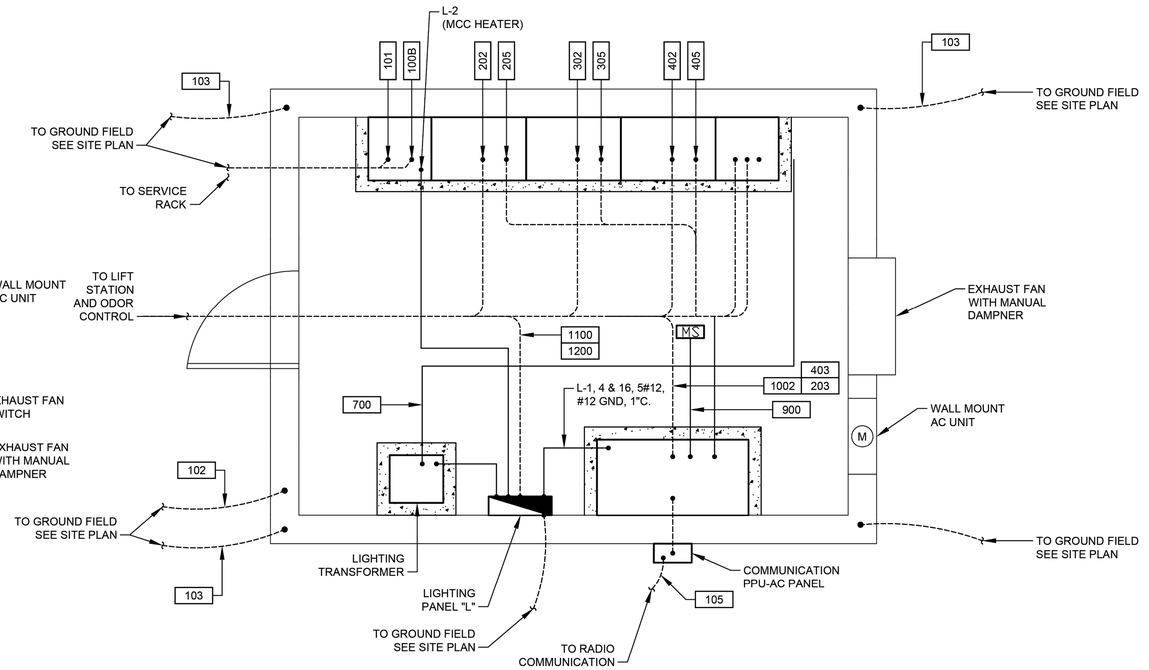

POWER PLAN

1/2"=1'-0"

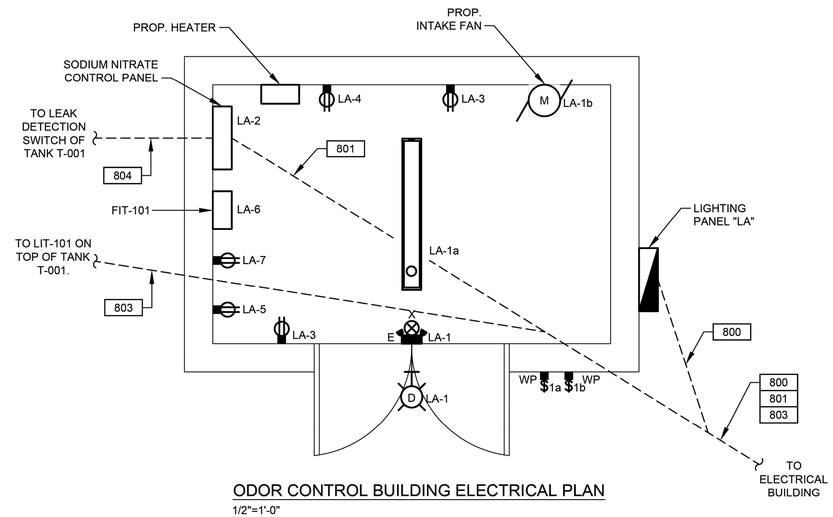

ODOR CONTROL BUILDING ELECTRICAL PLAN

1/2"=1'-0"

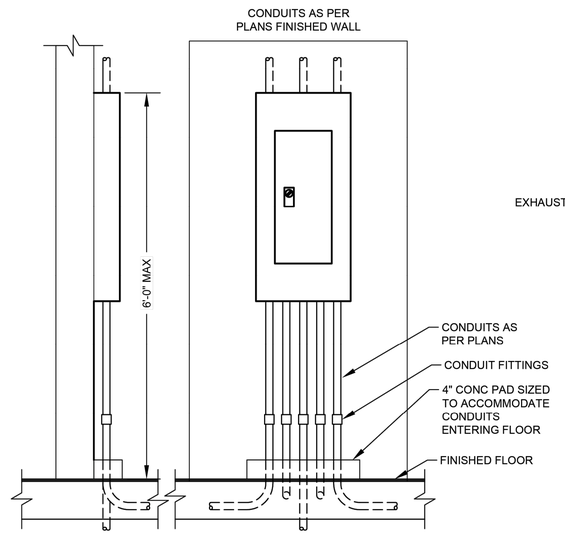

SIDE ELEVATION FRONT ELEVATION

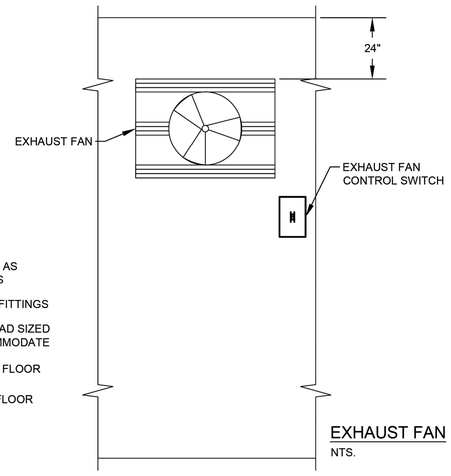

EXHAUST FAN

NTS.

TYPICAL PANEL INSTALLATION

DETAIL 1 / -

NTS.

FOR INTERIM REVIEW ONLY NOT INTENDED FOR PERMIT, BIDDING OR CONSTRUCTION PURPOSES.
ENGINEER:
HOSS FOROUZAN
P.E. SERIAL NO.77748
05/18/2026

GAI
Gupta & Associates, Inc.
CONSULTING ENGINEERING
Registration No. F-2593
302 Dennis St.,
Houston, Texas 77006
Tel: 713-636-2936
Fax: 713-636-2987
email: hforouzan@gaiconsulting.com

IDS Engineering Group
13430 NW. Freeway
Suite 700
Houston, Tx. 77040
713.462.3178
TxEng Firm 2726
TxSurv Firm 10110700

CITY OF HOUSTON

HOUSTON PUBLIC WORKS

LIFT STATION RENEWAL AND REPLACEMENT FY 2023

WOODFOREST LIFT STATION CONTROL BUILDING PLAN

WBS NUMBER	FOR CITY OF HOUSTON USE ONLY
R-000267-0179-4	
DRAWING SCALE	
HORIZ AS SHOWN VERT AS SHOWN	
CITY OF HOUSTON PM	
NAWARAJ PANTA, P.E.	
DWG. NO. WDF-E-08	SHEET NO. 290 OF 361

NO.	DATE	REVISION	APP.

FILE PATH: O:\H8108_Lift Station Rehabilitation And Reconstruction (IDS)\6 Drawings\Electrical\Working\Woodforest\H8108_WDF-E-08.dwg

IDS JOB No. 0057-085-00

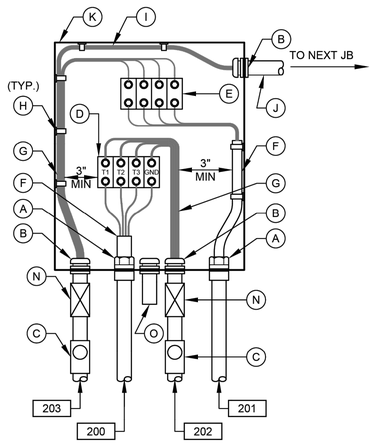

PUMP NO.1
JUNCTION BOX

DETAIL 3
NTS
(SEE NOTE 7)

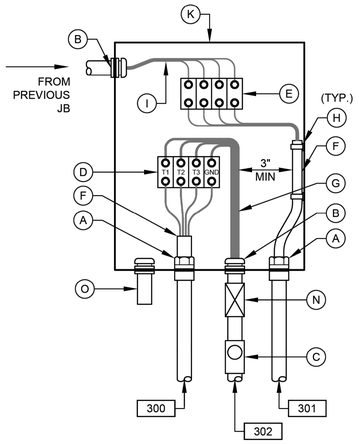

PUMP NO.2
JUNCTION BOX

DETAIL 4
NTS
(SEE NOTE 7)

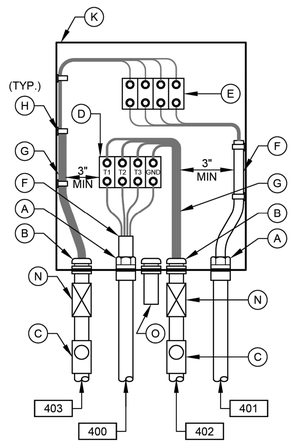

PUMP NO.3
JUNCTION BOX

DETAIL 5
NTS
(SEE NOTE 7)

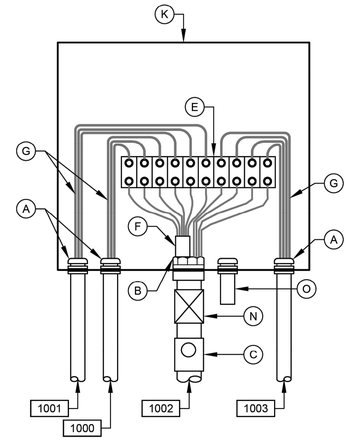

LEVEL TRANSMITTER
JUNCTION BOX

DETAIL 6
NTS
(SEE NOTE 7)

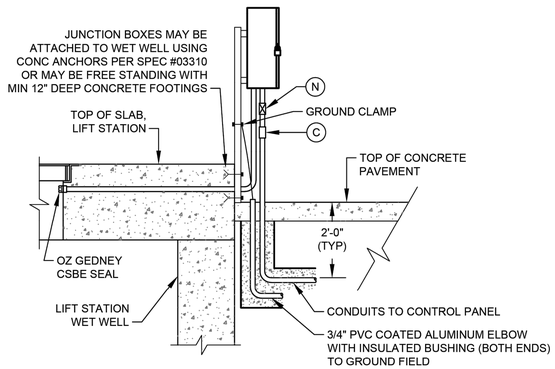

TYP SIDE VIEW FOR DETAIL 1, 2, & 7

(SEE NOTE 10)

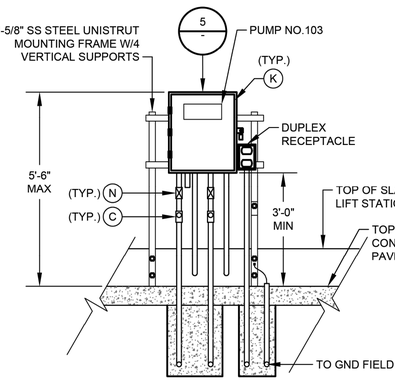

DETAIL 2
NTS
(SEE NOTE 7)

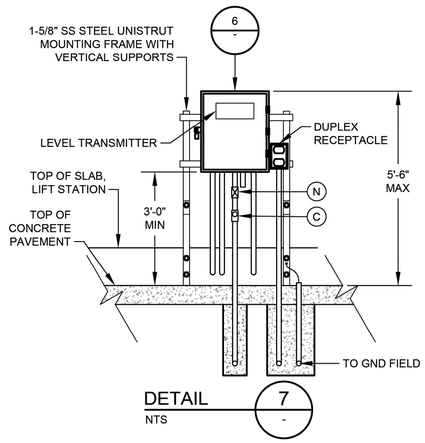

DETAIL 7
NTS

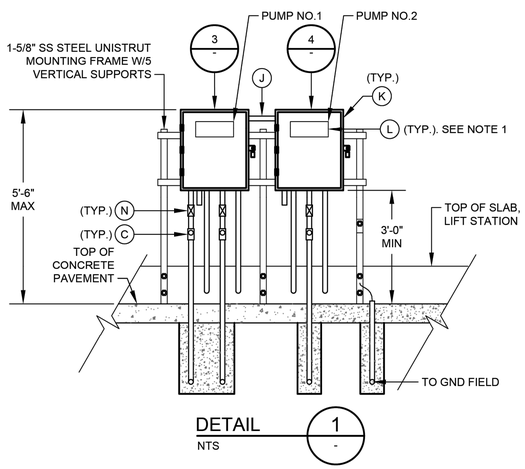

DETAIL 1
NTS

JUNCTION BOX EQUIPMENT SCHEDULE

- A - OZ GEDNEY CSBE SEAL
- B - WATERTIGHT CONDUIT HUB WITH INSULATED BUSHING
- C - CLASS I, DIV 1, EXPLOSION PROOF SEAL INSTALLED PER NEC DIV 501
- D - POWER TERMINAL BLOCK W/SCREW DOWN BOX LUGS
- E - CONTROL TERM BLOCK W/SCREW DOWN BOX LUGS
- F - MULTI-CONDUCTOR CABLE, REMOVE OUTER JACKET AS SHOWN
- G - WIRING AS SCHEDULED
- H - WIRING HARNESS PERMANENTLY AFFIXED
- I - PUMP CONTROL WIRING FROM PUMPS 2; 2 & 3; 4; OR D2, AS APPLICABLE
- J - 1 1/2" PVC COATED CONDUIT NIPPLE
- K - NEMA 6P STAINLESS STEEL JUNCTION BOX MINIMUM SIZE: 12"W X 16"H X 6"D
- L - NAMEPLATE, SEE SPECIFICATIONES (SEE NAMEPLATE SCHEDULE)
- M - MOTOR RATED SWITCH
- N - EXPANSION FITTING
- O - DRAIN VENT

NOTES:

1. NAMEPLATES SHALL BE MOUNTED TO JUNCTION BOXES USING 316 STAINLESS STEEL HARDWARE.
2. MAINTAIN MINIMUM SEPARATION REQUIRED UNDER NEC ARTICLE 504, BETWEEN INTRINSICALLY SAFE CONTROL WIRING AND NON INTRINSICALLY SAFE MOTOR FEEDER WIRING
3. UNLESS OTHERWISE NOTED, ALL EXTERIOR EXPOSED CONDUITS SHALL BE PVC COATED ALUMINUM.
4. UNLESS OTHERWISE NOTED, ALL NUTS, BOLTS, SCREWS WASHERS, ETC SHALL BE TYPE 316 STAINLESS STEEL.
5. ALL UNDERGROUND CONDUITS TO BE ENCASED IN REINFORCED CONCRETE DUCTBANK.
6. PROVIDE ANTI-CORROSIVE SPRAY ON ANY BARE METAL PARTS OR EXPOSED WIRE.
7. SEE WIRING SCHEMATICS FOR TERMINALS AND WIRE NUMBERS.
8. ANY CONDUIT REQUIRING A CSBE SEAL, SHALL BE A MINIMUM SIZE OF 2 1/2" PER CABLE.
9. NOT USED.
10. COORDINATE WITH WASTE WATER OPERATIONS ELECTRICAL ORGANIZATION FOR THE OPENING OF JUNCTION BOXES TO THE SIDE OF WET WELL IF REQUIRED DURING CONSTRUCTION.
11. THE ENCLOSURES WITH ELECTRICAL CIRCUITS SHALL BE A MINIMUM OF 5 FEET FROM ANY CLASSIFIED AREA, OTHERWISE EXPLOSION PROOF TYPE ENCLOSURES SHALL BE USED.

NO.	DATE	REVISION	APP.

FOR INTERIM REVIEW
ONLY NOT INTENDED FOR
PERMIT, BIDDING OR
CONSTRUCTION PURPOSES.
ENGINEER:
HOSS FOROUZAN
P.E. SERIAL NO.77748
05/18/2026

GAI
Gupta & Associates, Inc.
CONSULTING ENGINEERING
Registration No. F-2593
302 Dennis St.,
Houston, Texas 77006
Tel: 713-636-2936
Fax: 713-636-2987
email: hforouzan@gaiconsulting.com

IDS Engineering Group
13430 NW. Freeway
Suite 700
Houston, Tx. 77040
713.462.3178
TxEng Firm 2726
TxSurv Firm 10110700

CITY OF HOUSTON
HOUSTON PUBLIC WORKS

LIFT STATION RENEWAL
AND REPLACEMENT FY 2023

WOODFOREST LIFT STATION JUNCTION BOX DETAILS

WBS NUMBER	FOR CITY OF HOUSTON USE ONLY
R-000267-0179-4	
DRAWING SCALE	
HORIZ: NTS VERT: NTS	
CITY OF HOUSTON PM	
NAWARAJ PANTA, P.E.	
SHEET NO. 291 OF 361	

DWG. NO. WDF-E-09

IDS JOB No. 0057-085-00

PLOTTED: 5/12/2026 8:49 PM

FILE PATH: O:\H8108_Lift Station Rehabilitation And Reconstruction (IDS)\6 Drawings\Electrical\Working\Woodforest\H8108_WDF-E-09.dwg

PLOTTED: 5/12/2026 8:49 PM

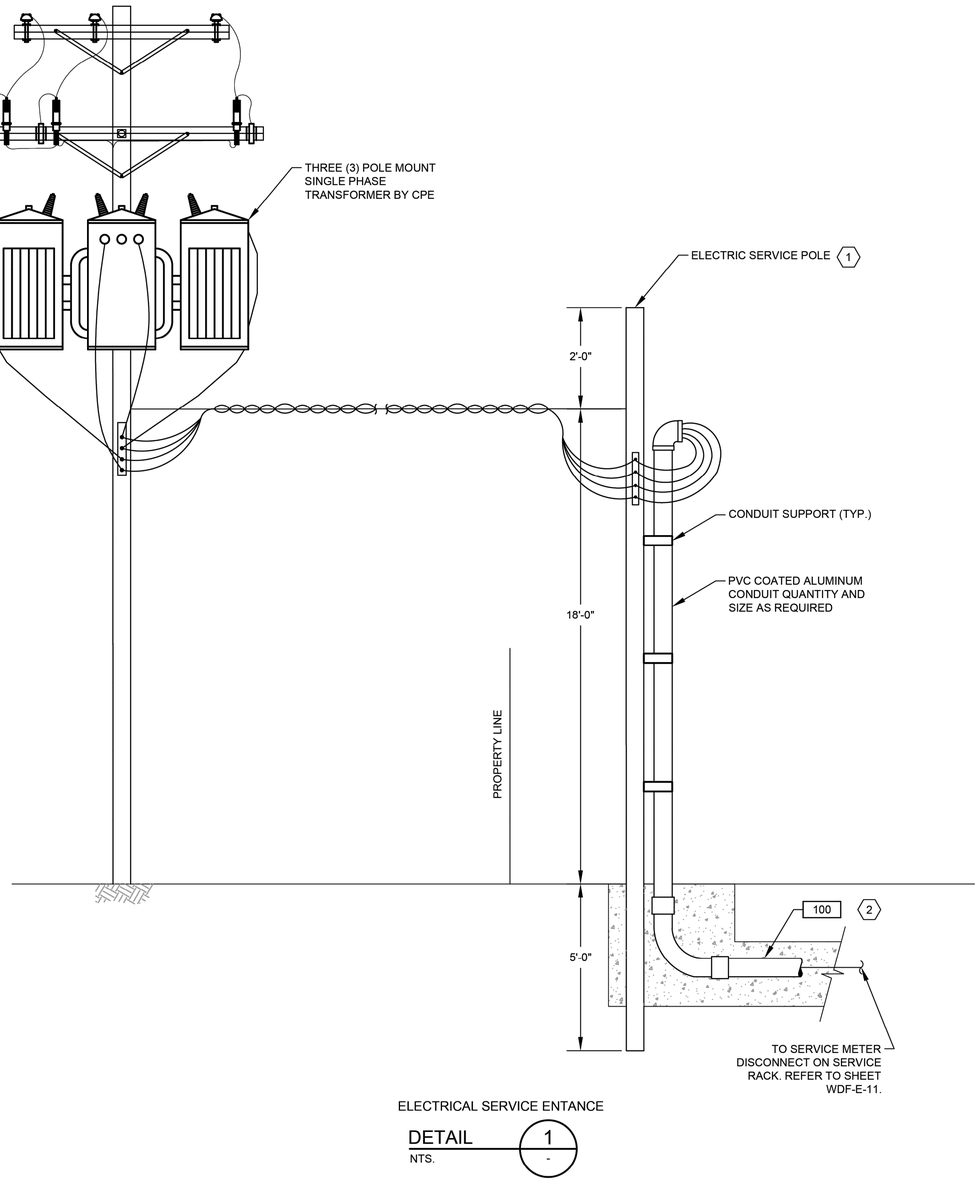

ELECTRICAL SERVICE ENTANCE

DETAIL 1 / NTS. -

NOTES BY SYMBOL "#":

1. WOODEN POLE 20' LONG. TOP DIAMETER 6" BOTTOM DIAMETER 8" PROVIDED AND INSTALLED BY ELECTRICAL CONTRACTOR.
2. ELECTRICAL SERVICE FEEDER PROVIDED AND INSTALLED BY ELECTRICAL CONTRACTOR. COORDINATE WITH CPE FOR THE REQUIREMENTS OF THE INSTALLATION.

NO.	DATE	REVISION	APP.

FOR INTERIM REVIEW
ONLY NOT INTENDED FOR
PERMIT, BIDDING OR
CONSTRUCTION PURPOSES.
ENGINEER:
HOSS FOROUZAN
P.E. SERIAL NO.77748
05/18/2026

GAI
Gupta & Associates, Inc.
CONSULTING ENGINEERING
Registration No. F-2593
302 Dennis St.,
Houston, Texas 77006
Tel: 713-636-2936
Fax: 713-636-2987
email: hforouzan@gaiconsulting.com

IDS Engineering Group
13430 NW. Freeway
Suite 700
Houston, Tx. 77040
713.462.3178
TxEng Firm 2726
TxSurv Firm 10110700

CITY OF HOUSTON

HOUSTON PUBLIC WORKS

LIFT STATION RENEWAL AND REPLACEMENT FY 2023

WOODFOREST LIFT STATION SERVICE POLE DETAIL

WBS NUMBER	FOR CITY OF HOUSTON USE ONLY
R-000267-0179-4	
DRAWING SCALE	
HORIZ: NTS VERT: NTS	
CITY OF HOUSTON PM	
NAWARAJ PANTA, P.E.	
SHEET NO. 292 OF 361	

DWG. NO. WDF-E-10

IDS JOB No. 0057-085-00

FILE PATH: O:\H8108_Lift Station Rehabilitation And Reconstruction (IDS)\6 Drawings\Electrical\Working\Woodforest\H8108_WDF-E-10.dwg

PLOTTED: 5/12/2026 8:49 PM

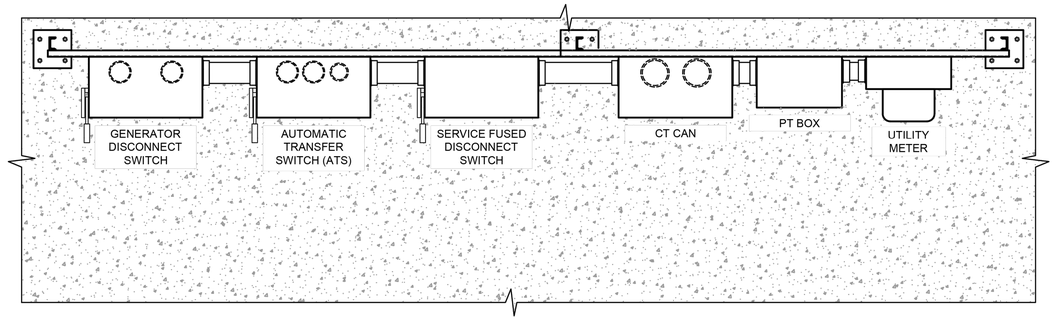

PLAN VIEW

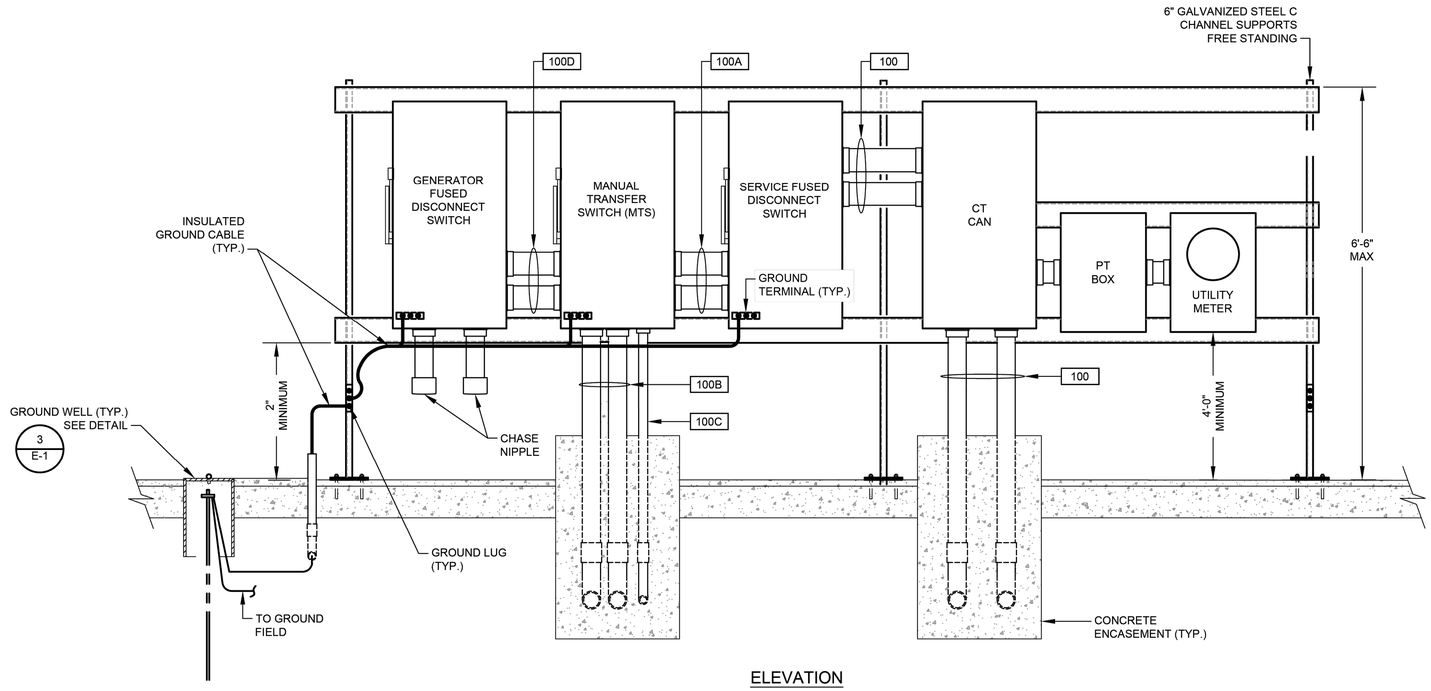

ELEVATION

ELECTRICAL SERVICE MOUNTING RACK

DETAIL 1 / NTS. -

NO.	DATE	REVISION	APP.

FOR INTERIM REVIEW
ONLY NOT INTENDED FOR
PERMIT, BIDDING OR
CONSTRUCTION PURPOSES.
ENGINEER:
HOSS FOROUZAN
P.E. SERIAL NO.77748
05/18/2026

GAI
Gupta & Associates, Inc.
CONSULTING ENGINEERING
Registration No. F-2593
302 Dennis St.,
Houston, Texas 77006
Tel: 713-636-2936
Fax: 713-636-2987
email: hforouzan@gaiconsulting.com

IDS Engineering Group
13430 NW. Freeway
Suite 700
Houston, Tx. 77040
713.462.3178
TxEng Firm 2726
TxSurv Firm 10110700

CITY OF HOUSTON
HOUSTON PUBLIC WORKS

LIFT STATION RENEWAL
AND REPLACEMENT FY 2023

WOODFOREST LIFT STATION
SERVICE RACK DETAIL

WBS NUMBER	FOR CITY OF HOUSTON USE ONLY
R-000267-0179-4	
DRAWING SCALE	
HORIZ: NTS VERT: NTS	
CITY OF HOUSTON PM	
NAWARAJ PANTA, P.E.	
SHEET NO. 293 OF 361	

DWG. NO. WDF-E-11

IDS JOB No. 0057-085-00

FILE PATH: O:\H8108_Lift Station Rehabilitation And Reconstruction (IDS)\6 Drawings\Electrical\Working\Woodforest\H8108_WDF-E-11.dwg

	DESCRIPTION	SERVICE		ROUTING			CONDUIT & WIRE SIZE
		VOLTAGE	AMPS OR HP	FROM	TO	VIA	
A	MAIN BONDING JUMPER	--	--	MAIN FUSED DISCONNECT NEUTRAL	MAIN FUSED DISCONNECT GROUND	--	#1/0 CU GND.
B	EQUIPMENT BONDING JUMPER	--	--	MCC/POWER PANEL ENCLOSURE	POWER/CONTROL PANEL & EQUIPMENT	--	#1/0 CU GND.
C	GROUNDED ELECTRODE CONDUCTOR	--	--	GROUNDING ELECTRODE	MAIN SERVICE FUSED DISCONNECT GROUNDING	--	#1/0 CU GND.
100	SERVICE ENTRANCE	480V	600A	UTILITY POWER SERVICE	METER DISCONNECT		2 SETS OF 3#350 MCM., #2 NEUT. #2 GND., 3" C. EA.
100A	SERVICE POWER	480V	600A	SERVICE DISCONNECT	MANUAL TRANSFER SWTICH	--	2 SETS OF 3#350 MCM., #2 NEUT. #2 GND., 3" C. EA.
100B	MCC SERVICE POWER	480V	600A	MANUAL TRANSFER SWITCH	MAIN BREAKER IN MCC	--	2 SETS OF 3#350 MCM., #2 NEUT. #2 GND., 3" C. EA.
100C	NORMAL/EMERGENCY POWER STATUS	24VDC	--	MANUAL TRANSFER SWITCH	CONTROL PANEL	--	4 #14 AWG., 1"C.
100D	EMERGENCY POWER	480V	600A	GENERATOR DISCONNECT	MANUAL TRANSFER SWITCH	--	2 SETS OF 3#350 MCM., #2 NEUT. #2 GND., 3" C. EA.
101	GROUND ELECTRODE CONDUCTOR	--	--	MCC ENCLOSURE	GROUND FIELD	--	#1/0 CU GND.
102	GROUND ELECTRODE CONDUCTOR	--	--	BUILDING STEEL	GROUND FIELD	--	#1/0 CU GND.
103	BUILDING GROUNDING	--	--	BUILDING REBAR	LIGHTNING GROUND ROD	--	#1/0 CU GND.
104	GROUND ELECTRODE CONDUCTOR	--	--	CONTROL PANEL	GROUND FIELD	--	#1/0 CU GND.
105	COMMUNICATION	--	--	COMMUNICATION POLE	CONTROL PANEL	--	1-1/2"C. CAT 5E
200	PUMP NO. 1 POWER	480V	85 HP	PUMP NO. 1	PUMP NO. 1 JUNCTION BOX	--	MANUFACTURER CABLE IN 3-1/2"C.
201	PUMP NO. 1 CONTROLS	120V	--	PUMP NO. 1	PUMP NO. 1 JUNCTION BOX	--	MANUFACTURER CABLE IN 3-1/2"C.
202	PUMP NO. 1 POWER	480V	85 HP	PUMP NO. 1 JUNCTION BOX	PUMP STARTER	--	3#2/0 AWG., #6 GND., 2"C.
203	COMBINED PUMP CONTROLS	120V	--	PUMP NO. 1 JUNCTION BOX	CONTROL PANEL	COMBINE PUMP 1 & 2 CONTROLS	COMBINE 200 & 300 TAG WIRING, 8#14, 1"C.
205	PUMP NO. 1 CONTROLS	120V	--	STARTER IN MOTOR CONTROL CENTER	CONTROL PANEL	--	20#14 AWG., 3/4"C.
300	PUMP NO. 2 POWER	480V	85 HP	PUMP NO. 2	PUMP NO. 2 JUNCTION BOX	--	MANUFACTURER CABLE IN 3-1/2"C.
301	PUMP NO. 2 CONTROLS	120V	--	PUMP NO. 2	PUMP NO. 2 JUNCTION BOX	--	MANUFACTURER CABLE IN 3-1/2"C.
302	PUMP NO. 2 POWER	480V	85 HP	PUMP NO. 2 JUNCTION BOX	PUMP STARTER	--	3#2/0 AWG., #6 GND., 2"C.
305	PUMP NO. 2 CONTROLS	120V	--	STARTER IN MOTOR CONTROL CENTER	CONTROL PANEL	--	20#14 AWG., 3/4"C.
400	PUMP NO. 3 POWER	480V	85 HP	PUMP NO. 3	PUMP NO. 3 JUNCTION BOX	--	MANUFACTURER CABLE IN 3-1/2"C.
401	PUMP NO. 3 CONTROLS	120V	--	PUMP NO. 3	PUMP NO. 3 JUNCTION BOX	--	MANUFACTURER CABLE IN 3-1/2"C.
402	PUMP NO. 3 POWER	480V	85 HP	PUMP NO. 3 JUNCTION BOX	PUMP STARTER	--	3#2/0 AWG., #6 GND., 2"C.
403	PUMP NO. 3 CONTROLS	120V	-	PUMP NO. 3 JUNCTION BOX	CONTROL PANEL	--	4#14 AWG., 1"C.
405	PUMP NO. 3 CONTROLS	120V	--	STARTER IN MOTOR CONTROL CENTER	CONTROL PANEL	--	20#14 AWG., 1"C.
700	LIGHTING TRANSFORMER FEEDER	480V	40A	MOTOR CONTROL CENTER	LIGHTING TRANSFORMER	--	2#6 AWG., #6 GND., 1"C.
701	LIGHTING PANEL GROUND	--	--	LIGHTING PANEL	GROUND FIELD	--	#8 GND., 1"C.
702	LIGHTING PANEL FEEDER	120/240V	80A	LIGHTING TRANSFORMER	LIGHTING PANEL	--	3#4 AWG., #6 GND., 1-1/4" C.
900	INTRUSION ALARM	24VDC	--	MOTION SWITCH	CONTROL PANEL	--	2#14 AWG., 3/4" C.
1000	LEVEL TRANSMITTER	24VDC	--	TRANSMITTER JUNCTION BOX	TRANSMITTER JUNCTION BOX	--	MANUFACTURER'S CABLE IN 2-1/2"C
1001	LEVEL TRANSMITTER	24VDC	--	TRANSMITTER JUNCTION BOX	TRANSMITTER JUNCTION BOX	--	MANUFACTURER'S CABLE IN 2-1/2"C
1002	COMBINED LEVEL TRANSMITTERS & FLOAT SWITCH	24VDC	--	CONTROL PANEL	TRANSMITTER JUNCTION BOX	--	2-TRI, 4#14, 2" C.
1003	WELL FLOAT SWITCHES	24VDC	--	TRANSMITTER JUNCTION BOX	FLOAT SWITCH NO.1 & NO.2	--	MANUFACTURER'S CABLE IN 2-1/2"C
1100	120VAC FOR RECEPTACLE	-	--	LIGHTING PANEL "L"	RECEPTACLE NEXT TO TRANSMITTER J-BOX	--	2#12 AWG., #12 GND., 1" C.
1200	120VAC FOR RECEPTACLE	-	--	LIGHTING PANEL "L"	RECEPTACLE NEXT TO PUMP NO.3 J-BOX	--	2#12 AWG., #12 GND., 1" C.
1300	SITE LIGHTING	120VAC	--	LIGHTING PANEL "L"	SITE LIGHTS	VIA SITE LIGHTING SWITCH	2#12 AWG., #12 GND., 1" C.
800	LIGHTING PANEL "LA" FEEDER	120/240V	40A	LIGHTING PANEL "L"	LIGHTING PANEL "LA"	--	3#6 AWG., #8 GND., 1" C.
801	ODOR CONTROLS	24VDC	--	CONTROL PANEL	SODIUM NITRATE CONTROL PANEL	--	18#14 AWG., 5-TRI #16 AWG., 2"C
802	FLOW METER POWER	120VAC	--	LIGHTING PANEL "LA"	FIT-101	--	2#12 AWG., #12 GND., 3/4" C.
803	LEVEL TRANSMITTER LIT-101	24VDC	--	CONTROL PANEL	LIT-101	--	1-TRI #16 AWG., 1" C.
804	TANK LEAK DETECTION	24VDC	--	SODIUM NITRATE CONTROL PANEL	LEAK DETECTION SWITCH	--	2#14 AWG., #14 GND., 1" C.

NO.	DATE	REVISION	APP.

FOR INTERIM REVIEW
ONLY NOT INTENDED FOR
PERMIT, BIDDING OR
CONSTRUCTION PURPOSES.
ENGINEER:
HOSS FOROUZAN
P.E. SERIAL NO.77748
05/18/2026

GAI
Gupta & Associates, Inc.
CONSULTING ENGINEERING
Registration No. F-2593

302 Dennis St.,
Houston, Texas 77006
Tel: 713-636-2936
Fax: 713-636-2987
email: hforouzan@gaiconsulting.com

IDS Engineering Group
13430 NW. Freeway
Suite 700
Houston, Tx. 77040
713.462.3178
TxEng Firm 2726
TxSurv Firm 10110700

CITY OF HOUSTON
HOUSTON PUBLIC WORKS

LIFT STATION RENEWAL AND REPLACEMENT FY 2023

WOODFOREST LIFT STATION CONDUIT SCHEDULE

WBS NUMBER	FOR CITY OF HOUSTON USE ONLY
R-000267-0179-4	
DRAWING SCALE	
HORIZ: NONE VERT: NONE	
CITY OF HOUSTON PM	
NAWARAJ PANTA, P.E.	
SHEET NO. 294 OF 361	

DWG. NO. WDF-E-12

IDS JOB No. 0057-085-00

PLOTTED: 5/12/2026 8:49 PM
FILE PATH: O:\H8108_Lift Station Rehabilitation And Reconstruction (IDS)\6 Drawings\Electrical\Working\Woodforest\H8108_WDF-E-12.dwg

PLOTTED: 5/12/2026 9:06 PM

FILE PATH: O:\H8108_Lift Station Rehabilitation And Reconstruction (IDS)\6 Drawings\Instrumentation And Control\Working\WoodForest\H8108_WDF-I-01.dwg

HMI

INFLUENT PUMP NO. 1

SPEED CTRL.	SPEED IND.	IN VFD	SEAL FAIL ALARM	MOTOR OVERLOAD ALARM	MOTOR CURRENT	HIGH TEMP ALARM	IN HAND	IN AUTO	ON/OFF	START/ STOP
SC 1	SI 1	IS 1	MA 1	MO 1	II 1	TH 1	HI 1	IA 1	YFS 1	YCS 1

INFLUENT PUMP NO. 2

SPEED CTRL.	SPEED IND.	IN VFD	SEAL FAIL ALARM	MOTOR OVERLOAD ALARM	MOTOR CURRENT	HIGH TEMP ALARM	IN HAND	IN AUTO	ON/OFF	START/ STOP
SC 2	SI 2	IS 2	MA 2	MO 2	II 2	TH 2	HI 2	IA 2	YFS 2	YCS 2

INFLUENT PUMP NO. 3

SPEED CTRL.	SPEED IND.	IN VFD	SEAL FAIL ALARM	MOTOR OVERLOAD ALARM	MOTOR CURRENT	HIGH TEMP ALARM	IN HAND	IN AUTO	ON/OFF	START/ STOP
SC 3	SI 3	IS 3	MA 3	MO 3	II 3	TH 3	HI 3	IA 3	YFS 3	YCS 3

ALARMS RESET	PRIMARY PLC FLOAT HIGH-HIGH WETWELL LEVEL	BACKUP PLC PUMP NO. 1 START/ STOP	BACKUP PLC PUMP NO. 2 START/ STOP	BACKUP PLC PUMP NO. 3 START/ STOP
RE 1	LAHH 1A	YCS 1A	YCS 2A	YCS 3A

CONTROL PANEL PLC

CONTROL PANEL

480V → INFLUENT PUMPS MCC

INFLUENT PUMP NO. 1 — H/O/A, RUN

INFLUENT PUMP NO. 2 — H/O/A, RUN

INFLUENT PUMP NO. 3 — H/O/A, RUN

PRIMARY PLC

BACKUP PLC

INFLUENT PUMP CONTROL PANEL

ALARMS RESET

OIT

TO SHEET WDF-I-2

WDF-I-2

WDF-I-2

WET WELL

LT 1

LE 1

LT 2

LE 2

LSH 1A

TSH 1A

FS2 HIGH-HIGH LEVEL FLOAT SWITCH

LSH 2A

TSH 2A

LSH 3A

TSH 3A

FS1 HIGH LEVEL FLOAT SWITCH

M

INFLUENT DISCHARGE

FOR INTERIM REVIEW
ONLY NOT INTENDED FOR
PERMIT, BIDDING OR
CONSTRUCTION PURPOSES.
ENGINEER:
HOSS FOROUZAN
P.E. SERIAL NO.77748
05/18/2026

GAI
Gupta & Associates, Inc.
CONSULTING ENGINEERING
Registration No. F-2593
302 Dennis St.,
Houston, Texas 77006
Tel: 713-636-2936
Fax: 713-636-2987
email: hforouzan@gaiconsulting.com

IDS Engineering Group
13430 NW. Freeway
Suite 700
Houston, Tx. 77040
713.462.3178
TxEng Firm 2726
TxSurv Firm 10110700

CITY OF HOUSTON
HOUSTON PUBLIC WORKS

LIFT STATION RENEWAL
AND REPLACEMENT FY 2023

WOODFOREST LIFT STATION
P&ID DIAGRAM–I

WBS NUMBER	FOR CITY OF HOUSTON USE ONLY
R–000267–0179–4	
DRAWING SCALE	
HORIZ: NONE VERT: NONE	
CITY OF HOUSTON PM	
NAWARAJ PANTA, P.E.	
SHEET NO. 295 OF 361	

DWG. NO. WDF–I–01

NO.	DATE	REVISION	APP.

IDS JOB No. 0057-085-00

PLOTTED: 5/12/2026 9:06 PM

FILE PATH: O:\H8108_Lift Station Rehabilitation And Reconstruction (IDS)\6 Drawings\Instrumentation And Control\1Working\WoodForest\H8108_WDF-I-02.dwg

HMI

CONTROL PANEL PLC

CONTROL PANEL

BACKUP PLC
FLOAT HIGH-HIGH WETWELL LEVEL
LAHH 1B

PRIMARY PLC PHASE FAILURE UNDERVOLTAGE
JA 1

BACKUP PLC PHASE FAILURE UNDERVOLTAGE
JA 2

PRIMARY PLC
PRIMARY LEVEL TRANSMITTER
HIGH LEVEL LAH 1
LEVEL INDICATION LI 1
LOW LEVEL LAL 1

PRIMARY PLC
BACKUP LEVEL TRANSMITTER
HIGH LEVEL LAH 2
LEVEL INDICATION LI 2
LOW LEVEL LAL 2

HIGH LEVEL ALARM
LAH 1B

PRIMARY PLC MODE ACTIVE
YI 1A

BACKUP PLC MODE ACTIVE
YI 1B

INSTRUSION ALARM
YA 1

BACKUP PLC
PRIMARY LEVEL TRANSMITTER
HIGH LEVEL LAH 1A
LEVEL INDICATION LI 1A
LOW LEVEL LAL 1A

BACKUP PLC
BACKUP LEVEL TRANSMITTER
HIGH LEVEL LAH 2A
LEVEL INDICATION LI 2A
LOW LEVEL LAL 2A

MTS IN NORMAL SOURCE
ZI 1A

MTS IN GENERATOR SOURCE
ZI 1B

ALARMS RESET
RE 2

FROM SHEET WDF-I-1

FROM SHEET WDF-I-14

WDF-I-1

WDF-I-1

NO.	DATE	REVISION	APP.

FOR INTERIM REVIEW
ONLY NOT INTENDED FOR
PERMIT, BIDDING OR
CONSTRUCTION PURPOSES.
ENGINEER:
HOSS FOROUZAN
P.E. SERIAL NO.77748
05/18/2026

GAI
Gupta & Associates, Inc.
CONSULTING ENGINEERING
Registration No. F-2593
302 Dennis St.,
Houston, Texas 77006
Tel: 713-636-2936
Fax: 713-636-2987
email: hforouzan@gaiconsulting.com

IDS Engineering Group
13430 NW. Freeway
Suite 700
Houston, Tx. 77040
713.462.3178
TxEng Firm 2726
TxSurv Firm 10110700

CITY OF HOUSTON
HOUSTON PUBLIC WORKS

LIFT STATION RENEWAL
AND REPLACEMENT FY 2023

WOODFOREST LIFT STATION
P&ID DIAGRAM–II

WBS NUMBER	FOR CITY OF HOUSTON USE ONLY
R–000267–0179–4	
DRAWING SCALE	
HORIZ: NONE VERT: NONE	
CITY OF HOUSTON PM	
NAWARAJ PANTA, P.E.	
SHEET NO. 296 OF 361	

DWG. NO.
WDF–I–02

IDS JOB No. 0057-085-00

PLOTTED: 5/12/2026 9:06 PM

FILE PATH: O:\H8108_Lift Station Rehabilitation And Reconstruction (IDS)\6 Drawings\Instrumentation And Control\Working\WoodForest\H8108_WDF-I-03.dwg

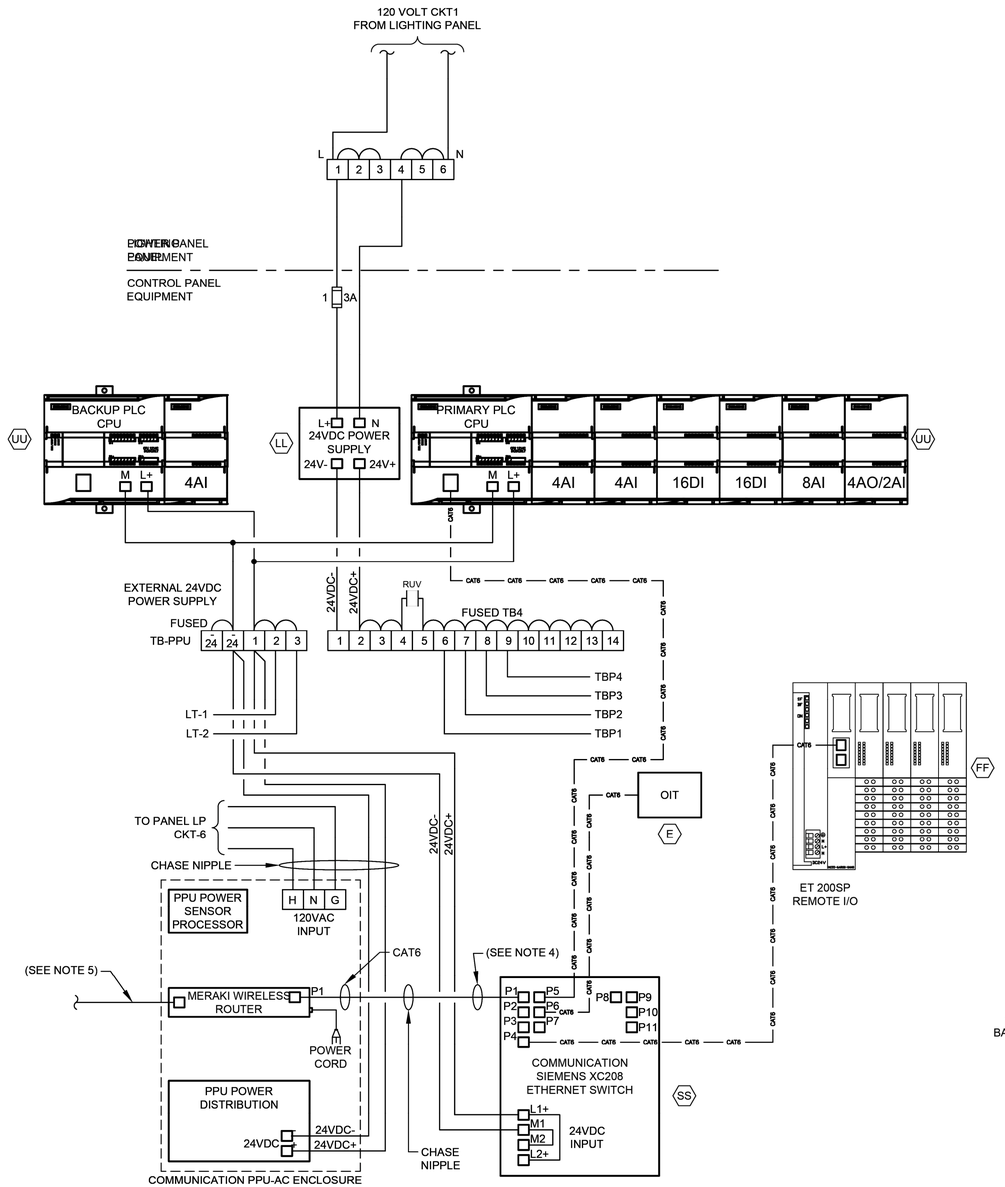

CONTROL POWER & COMMUNICATIONS WIRING

DIAGRAM

NTS

(SEE NOTE 2 & 6)

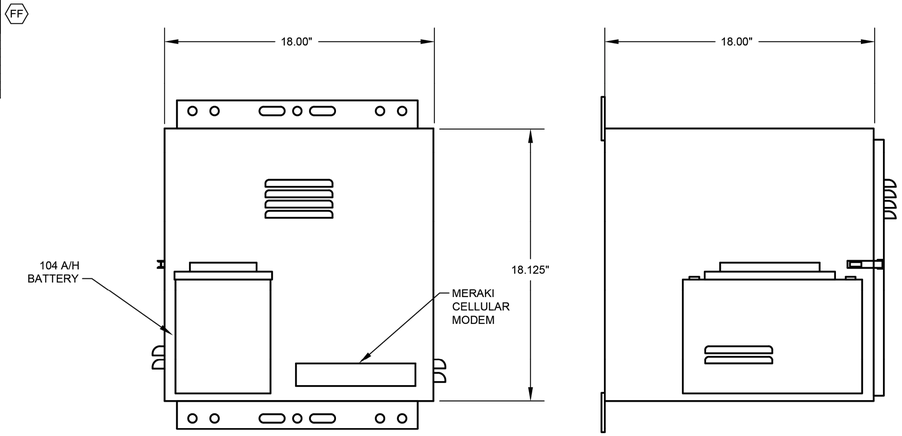

PPU-AC ENCLOSURE FRONT VIEW

PPU-AC ENCLOSURE SIDE VIEW

PPU-AC CONTROL ENCLOSURE

ELEVATION

NTS

(SEE NOTE 7)

NOTES:

1. FOR DESCRIPTION AND RATINGS OF ITEMS INDICATED WITH ITEM TAG, SEE DEVICE RATINGS SCHEDULE.
2. REFER TO SPEC SECTION 16120 FOR CONDUCTOR COLOR CODE.
3. THE PLC POWER SUPPLY SHALL FEED THE 24VDC I/O.
4. ETHERNET CABLE FOR MERAKI CELLULAR ROUTER (P1).
5. CAT6 POE CABLE TO RADIO.
6. COMMUNICATION PPU-AC & SCADA SHALL BE PROVIDED BY CONTRACTOR INCLUDING TO RUN CONDUITS & WIRES.
7. COORDINATE WITH VENDOR TO PROVIDE PROPER VENTILATION WHERE APPLICABLE.

GENERAL NOTES:

1. NO ELECTRICAL MATERIAL, APPARATUS, DEVICES, APPLIANCES, FIXTURES, OR EQUIPMENT SHALL BE SOLD OR INSTALLED IN THE CITY UNLESS THEY ARE IN CONFORMANCE WITH THE PROVISIONS OF SECTION 508 CITY OF HOUSTON ELECTRICAL CODE, THE LAWS OF THE STATE OF TEXAS AND ANY APPLICABLE RULES AND REGULATIONS ISSUED UNDER THE AUTHORITY OF THE STATE STATUES. THE MAKER'S NAME, TRADEMARK, OR OTHER IDENTIFICATION SYMBOL SHALL BE PLACED ON ALL ELECTRICAL MATERIALS, APPARATUS, DEVICES, APPLIANCES, FIXTURES, AND EQUIPMENT USED OR INSTALLED UNDER THE PROVISIONS OF THIS CODE. ALL ELECTRICAL MATERIALS AND EQUIPMENT SHALL BE LISTED AND LABELED FOR THE INTENDED USE AND SHALL BE INCLUDED IN A LIST PUBLISHED BY AN APPROVAL AGENCY.

NO.	DATE	REVISION	APP.

FOR INTERIM REVIEW
ONLY NOT INTENDED FOR
PERMIT, BIDDING OR
CONSTRUCTION PURPOSES.
ENGINEER:
HOSS FOROUZAN
P.E. SERIAL NO.77748
05/18/2026

GAI
Gupta & Associates, Inc.
CONSULTING ENGINEERING
Registration No. F-2593
302 Dennis St.,
Houston, Texas 77006
Tel: 713-636-2936
Fax: 713-636-2987
email: hforouzan@gaiconsulting.com

IDS Engineering Group
13430 NW. Freeway
Suite 700
Houston, Tx. 77040
713.462.3178
TxEng Firm 2726
TxSurv Firm 10110700

CITY OF HOUSTON
HOUSTON PUBLIC WORKS

LIFT STATION RENEWAL AND REPLACEMENT FY 2023

WOODFOREST LIFT STATION COMMUNICATION DIAGRAM

WBS NUMBER	FOR CITY OF HOUSTON USE ONLY
R-000267-0179-4	
DRAWING SCALE	
HORIZ: NTS VERT: NTS	
CITY OF HOUSTON PM	
NAWARAJ PANTA, P.E.	
SHEET NO. 297 OF 361	

DWG. NO. WDF-I-03

IDS JOB No. 0057-085-00

PLOTTED: 5/12/2026 9:06 PM

EQUIPMENT AND DEVICE SCHEDULE

ITEM	QUANTITY	DESCRIPTION
A	1	SINGLE CHANNEL INTRINSICALLY SAFE RELAY
B	2	ANALOG SIGNAL ISOLATOR
C	4	PUMP PROTECTION MODULE
D	*	NOT USED
E	4	HAND-OFF-AUTO SWITCH, 3 POSITION, HEAVY-DUTY OIL TIGHT WITH 2 SETS OF CONTACT BLOCKS (PUMP CONTROL)
F	4	INDICATING LIGHT, HEAVY DUTY, OILTIGHT, RED, 24 VDC, LED, WITH "RUN" LEGEND
G	*	NOT USED.
H	1	SWITCH FOR CABINET LIGHT, 120V, 20A, SPST
I	2	DUPLEX RECEPTACLE, 120V, 20A, 2 WIRE, GROUNDED, GFCI TYPE
J	1	24" LED STRIP LIGHT 120V SUITABLE FOR ZERO DEGREE OPERATION
K	*	NAMEPLATES, SEE SPECIFICATIONS (SEE NAMEPLATE SCHEDULE)
L	2	PROGRAMMABLE LOGIC CONTROLLER WITH EXPANSION UNIT
M	*	CONTROL RELAY 24VDC RELAY WITH THREE FORM C CONTACTS AND 11 PIN SOCKET BASE
N	-	NOT USED
O	-	NOT USED
P	1	NEMA 12 GASKETED STEEL ENCLOSURES WITHOUT VENTS 72" H X 20" D X 48" W
Q	*	TERMINAL BLOCK
R	1	WIRE DUCT 2" WIDE X 2" DEEP MINIMUM
S	1	GROUND BUS
T	1	COMMUNICATION ETHERNET SWITCH
U	9	CARTRIDGE
V	1	PUSHBUTTON, BLACK WITH RESET LEGEND
W	-	NOT USED
X	*	FUSED TERMINAL BLOCKS
Y	1	POWER SURGE PROTECTOR - CONTROL POWER
Z	1	PROGRAMMING SCREEN (OIT)
AA	*	120VAC SYSTEM FUSES
BB	1	120VAC - 24VDC POWER SUPPLY, 5A
CC	*	NOT USED
DD	2	INDICATING LIGHT, HEAVY DUTY, OILTIGHT, GREEN, 24VDC, LED WITH "BACKUP PLC" & "PRIMARY PLC" LEGEND
EE	2	ANALOG I/O SURGE SUPPRESSOR
FF	1	REMOTE I/O WITH EXPANSION UNIT

* - AS SCHEDULED

NAMEPLATE SCHEDULE

DESIGNATION	ENGRAVED
N1	PUMP STATION DESIGNATION
N2	PUMP NO. 1
N3	PUMP NO. 2
N4	PUMP NO. 3
N5	PUMP NO. 4
N6	NOT USED.
N7	NOT USED.
N8	NOT USED.
N9	NOT USED.
N10	PROGRAMMING SCREEN
N11	NOT USED.
N12	PRIMARY PLC
N13	BACKUP PLC
N14	MOTOR DATA HORSEPOWER (OUTPUT) ---------- RPM AT FULL LOAD ---------- TIME RATING ---------- FREQUENCY ---------- NUMBER OF PHASES ---------- MODEL NUMBER ---------- RATED VOLTAGE ---------- SERVICE FACTOR ---------- FULL LOAD AMPS ---------- INSULATION CLASS ---------- NEMA DESIGN LETTER ---------- TEMPERATURE RISE ---------- NEMA FRAME SIZE ---------- DATE OF MANUFACTURE ---------- THERMO PROTECTION (IF REQUIRED) -- MOISTURE PROTECTION (IF REQUIRED)-

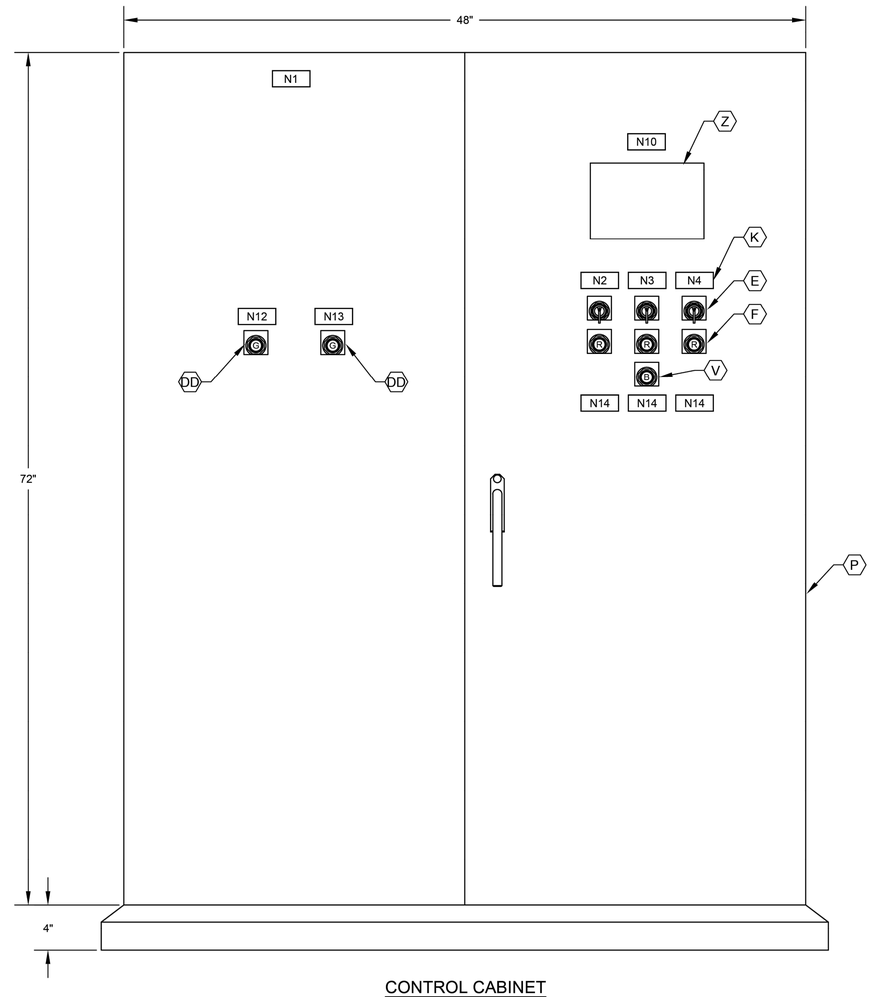

CONTROL CABINET
FRONT DOOR ELEVATION

NOTES:

1. NAMEPLATES SHALL BE MOUNTED TO PANELS USING STAINLESS STEEL HARDWARE.
2. REFER SPECIFICATIONS FOR ALL PANEL COMPONENTS.

GENERAL NOTES:

1. NO ELECTRICAL MATERIAL, APPARATUS, DEVICES, APPLIANCES, FIXTURES, OR EQUIPMENT SHALL BE SOLD OR INSTALLED IN THE CITY UNLESS THEY ARE IN CONFORMANCE WITH THE PROVISIONS OF SECTION 508 CITY OF HOUSTON ELECTRICAL CODE, THE LAWS OF THE STATE OF TEXAS AND ANY APPLICABLE RULES AND REGULATIONS ISSUED UNDER THE AUTHORITY OF THE STATE STATUES. THE MAKER'S NAME, TRADEMARK, OR OTHER IDENTIFICATION SYMBOL SHALL BE PLACED ON ALL ELECTRICAL MATERIALS, APPARATUS, DEVICES, APPLIANCES, FIXTURES, AND EQUIPMENT USED OR INSTALLED UNDER THE PROVISIONS OF THIS CODE. ALL ELECTRICAL MATERIALS AND EQUIPMENT SHALL BE LISTED AND LABELED FOR THE INTENDED USE AND SHALL BE INCLUDED IN A LIST PUBLISHED BY AN APPROVAL AGENCY.

NO.	DATE	REVISION	APP.

FOR INTERIM REVIEW
ONLY NOT INTENDED FOR
PERMIT, BIDDING OR
CONSTRUCTION PURPOSES.
ENGINEER:
HOSS FOROUZAN
P.E. SERIAL NO.77748
05/18/2026

GAI
Gupta & Associates, Inc.
CONSULTING ENGINEERING
Registration No. F-2593
302 Dennis St.,
Houston, Texas 77006
Tel: 713-636-2936
Fax: 713-636-2987
email: hforouzan@gaiconsulting.com

IDS Engineering Group
13430 NW. Freeway
Suite 700
Houston, Tx. 77040
713.462.3178
TxEng Firm 2726
TxSurv Firm 10110700

CITY OF HOUSTON
HOUSTON PUBLIC WORKS

LIFT STATION RENEWAL
AND REPLACEMENT FY 2023

WOODFOREST LIFT STATION CONTROL CABINET EQUIP. LAYOUT & SCHEDULE

WBS NUMBER	FOR CITY OF HOUSTON USE ONLY
R-000267-0179-4	
DRAWING SCALE	
HORIZ: NONE VERT: NONE	
CITY OF HOUSTON PM	
NAWARAJ PANTA, P.E.	
SHEET NO. 298 OF 361	

DWG. NO. WDF-I-04

IDS JOB No. 0057-085-00

FILE PATH: O:\H8108_Lift Station Rehabilitation And Reconstruction (IDS)\6 Drawings\Instrumentation And Control\Working\WoodForest\H8108_WDF-I-04.dwg

PLOTTED: 5/12/2026 9:06 PM

FILE PATH: O:\H8108_Lift Station Rehabilitation And Reconstruction (IDS)\6 Drawings\Instrumentation And Control\1Working\WoodForest\H8108_WDF-I-05.dwg

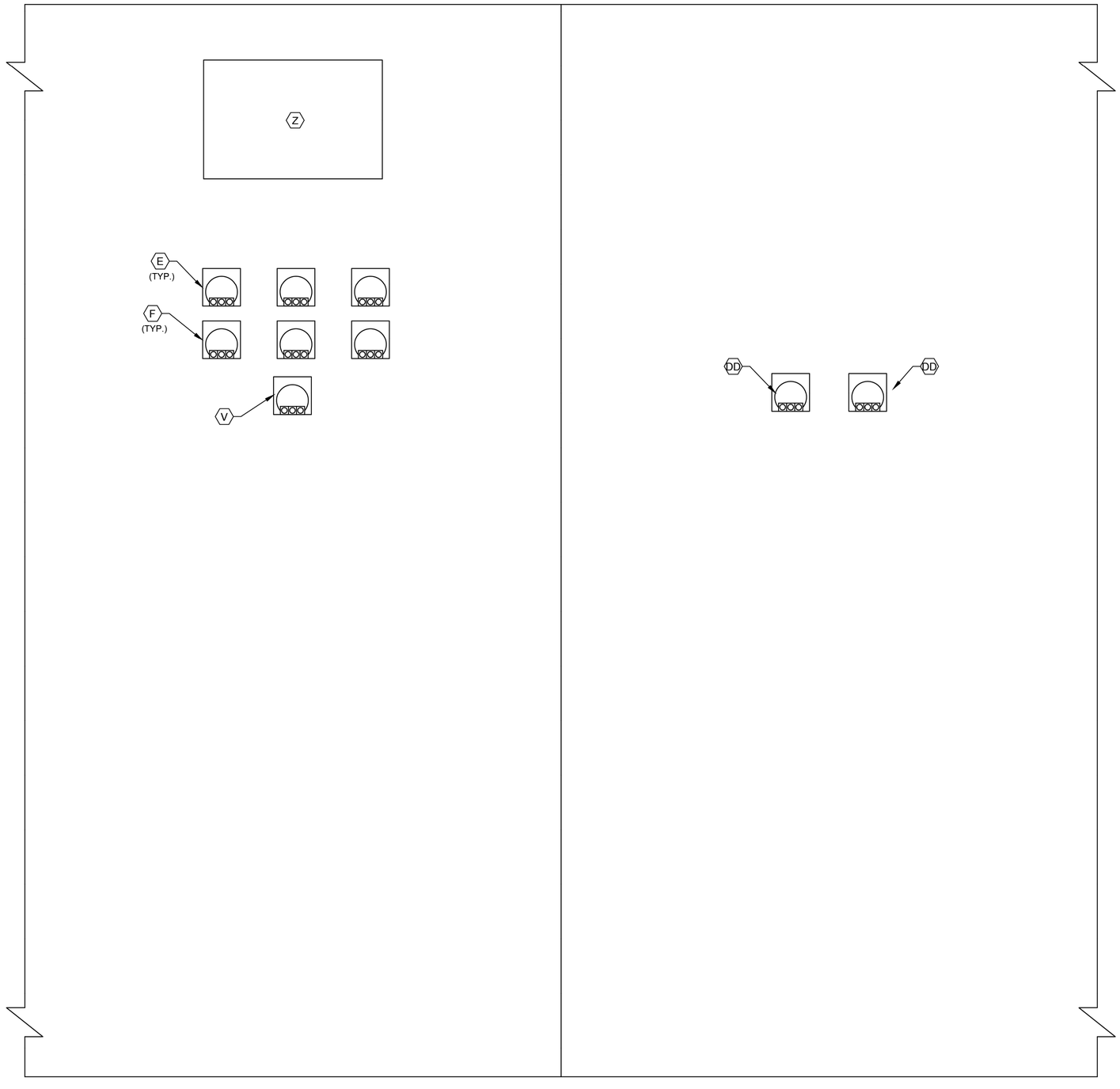

CONTROL CABINET
BACK DOOR ELEVATION

NOTES:

1. SEE SHEET WDF-I-4 FOR EQUIPMENT SCHEDULE.

GENERAL NOTES:

1. NO ELECTRICAL MATERIAL, APPARATUS, DEVICES, APPLIANCES, FIXTURES, OR EQUIPMENT SHALL BE SOLD OR INSTALLED IN THE CITY UNLESS THEY ARE IN CONFORMANCE WITH THE PROVISIONS OF SECTION 508 CITY OF HOUSTON ELECTRICAL CODE, THE LAWS OF THE STATE OF TEXAS AND ANY APPLICABLE RULES AND REGULATIONS ISSUED UNDER THE AUTHORITY OF THE STATE STATUES. THE MAKER'S NAME, TRADEMARK, OR OTHER IDENTIFICATION SYMBOL SHALL BE PLACED ON ALL ELECTRICAL MATERIALS, APPARATUS, DEVICES, APPLIANCES, FIXTURES, AND EQUIPMENT USED OR INSTALLED UNDER THE PROVISIONS OF THIS CODE. ALL ELECTRICAL MATERIALS AND EQUIPMENT SHALL BE LISTED AND LABELED FOR THE INTENDED USE AND SHALL BE INCLUDED IN A LIST PUBLISHED BY AN APPROVAL AGENCY.

NO.	DATE	REVISION	APP.

FOR INTERIM REVIEW
ONLY NOT INTENDED FOR
PERMIT, BIDDING OR
CONSTRUCTION PURPOSES.
ENGINEER:
HOSS FOROUZAN
P.E. SERIAL NO.77748
05/18/2026

GAI
Gupta & Associates, Inc.
CONSULTING ENGINEERING
Registration No. F-2593
302 Dennis St.,
Houston, Texas 77006
Tel: 713-636-2936
Fax: 713-636-2987
email: hforouzan@gaiconsulting.com

IDS Engineering Group
13430 NW. Freeway
Suite 700
Houston, Tx. 77040
713.462.3178
TxEng Firm 2726
TxSurv Firm 10110700

CITY OF HOUSTON
HOUSTON PUBLIC WORKS

LIFT STATION RENEWAL
AND REPLACEMENT FY 2023

WOODFOREST LIFT STATION CONTROL CABINET BACK DOOR ELEVATION

WBS NUMBER	FOR CITY OF HOUSTON USE ONLY
R-000267-0179-4	
DRAWING SCALE	
HORIZ: NONE VERT: NONE	
CITY OF HOUSTON PM	
NAWARAJ PANTA, P.E.	
SHEET NO. 299 OF 361	

DWG. NO.
WDF-I-05

IDS JOB No. 0057-085-00

PLOTTED: 5/12/2026 9:06 PM

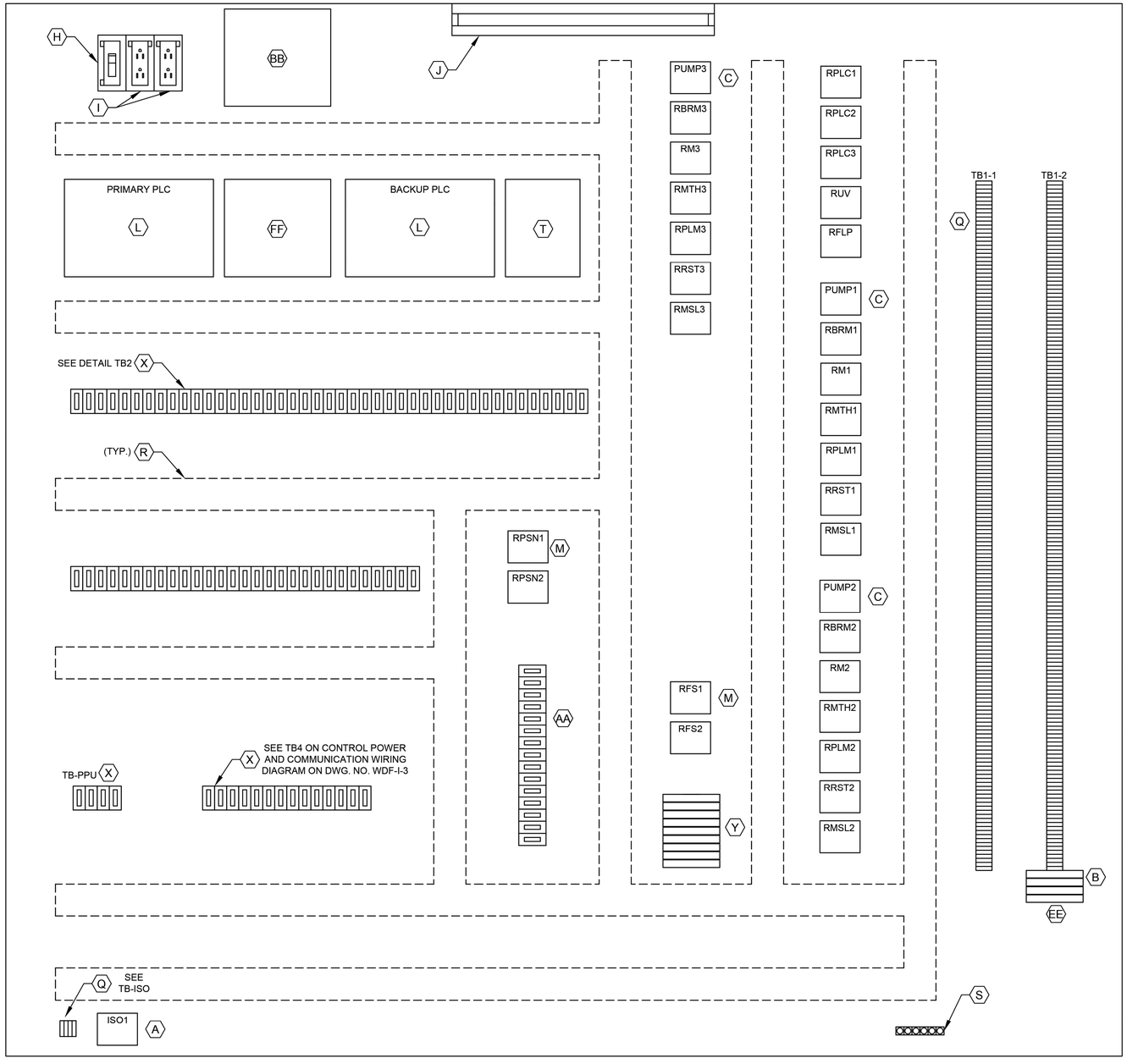

CONTROL PANEL ELEVATION

LEGEND	
TAG	DESCRIPTION
RMTH	MOTOR HIGH TEMPERATURE ALARM RELAY
RPLMP	PLC PUMP RUN RELAY
RRST	PUMP RESET AUX RELAY
RPLC	PLC MODE AUX RELAY
RM	PUMP RUN AUX RELAY
RUV	UNDER VOLTAGE RELAY
RBRM	BACKUP SYSTEM RUN RELAY
ISO	INTRINSICALLY SAFE RELAY
RFS	PUMP RUN FLOAT SWITCH RELAY
RMSL	MOTOR SEAL LEAK ALARM RELAY
RFLP	FLOAT LOCKOUT PUMP RELAY
RPSN	SODIUM NITRATE PUMP RELAY

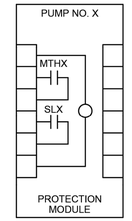

PUMP PROTECTION MODULE DETAIL, ITEM C

NOTE: REPLACE "X" WITH APPROPRIATE PUMP NO.

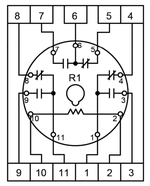

RELAY DETAIL ITEM M

NOTES:

1. SEE SHEET WDF-I-4 FOR EQUIPMENT SCHEDULE.

GENERAL NOTES:

1. NO ELECTRICAL MATERIAL, APPARATUS, DEVICES, APPLIANCES, FIXTURES, OR EQUIPMENT SHALL BE SOLD OR INSTALLED IN THE CITY UNLESS THEY ARE IN CONFORMANCE WITH THE PROVISIONS OF SECTION 508 CITY OF HOUSTON ELECTRICAL CODE, THE LAWS OF THE STATE OF TEXAS AND ANY APPLICABLE RULES AND REGULATIONS ISSUED UNDER THE AUTHORITY OF THE STATE STATUES. THE MAKER'S NAME, TRADEMARK, OR OTHER IDENTIFICATION SYMBOL SHALL BE PLACED ON ALL ELECTRICAL MATERIALS, APPARATUS, DEVICES, APPLIANCES, FIXTURES, AND EQUIPMENT USED OR INSTALLED UNDER THE PROVISIONS OF THIS CODE. ALL ELECTRICAL MATERIALS AND EQUIPMENT SHALL BE LISTED AND LABELED FOR THE INTENDED USE AND SHALL BE INCLUDED IN A LIST PUBLISHED BY AN APPROVAL AGENCY.

DETAIL TB1-1
L1A
L1N
SPARE
3
3N
SPARE
49
50
51
52
53
54
1004
1
24V-
24V-
SPARE
1002
2
11
1001
1001A
12
1003
1003A
34
3N
19
20
102
103
3P1
109
110
112
116
117
120
121
122
123
124
125
126
127
SPARE
SPARE
202
203
3P2
209
210
212
216
217
220
221
222
223
224
225
226
227

DETAIL TB1-2
SPARE
SPARE
302
303
3P3
309
310
312
316
317
320
321
322
323
324
325
326
327
SPARE
SPARE

DETAIL TB2
36A
37A
50
52
54
52A
52A
54A
L+
M
35B
38B
41B
44B
SPARE
SPARE
47B
50B
53B
13B
13AB
B
L+
M
14B
14AB
14GB
119
SPARE
L+
M
13
13A
13G
14
14A
14G
1M
2M
1L
3
30
32
34
37
38
41
33B
45
18B
SPARE

DETAIL TB2
100
112
113
114
115
117
118
119
120
121
SPARE
200
212
213
214
215
217
218
219
220
221
SPARE
300
312
313
314
315
317
318
319
320
321
SPARE

DETAIL TB-ISO
1500
1501
1503
1504

FOR INTERIM REVIEW
ONLY NOT INTENDED FOR
PERMIT, BIDDING OR
CONSTRUCTION PURPOSES.
ENGINEER:
HOSS FOROUZAN
P.E. SERIAL NO.77748
05/18/2026

GAI
Gupta & Associates, Inc.
CONSULTING ENGINEERING
Registration No. F-2593
302 Dennis St.,
Houston, Texas 77006
Tel: 713-636-2936
Fax: 713-636-2987
email: hforouzan@gaiconsulting.com

IDS Engineering Group
13430 NW. Freeway
Suite 700
Houston, Tx. 77040
713.462.3178
TxEng Firm 2726
TxSurv Firm 10110700

CITY OF HOUSTON
HOUSTON PUBLIC WORKS

LIFT STATION RENEWAL AND REPLACEMENT FY 2023

WOODFOREST LIFT STATION CONTROL CABINET EQUIPMENT LAYOUT

WBS NUMBER	FOR CITY OF HOUSTON USE ONLY
R-000267-0179-4	
DRAWING SCALE	
HORIZ: NONE VERT: NONE	
CITY OF HOUSTON PM	
NAWARAJ PANTA, P.E.	
SHEET NO. 300 OF 361	

DWG. NO. WDF-I-06

NO.	DATE	REVISION	APP.

FILE PATH: O:\H8108_Lift Station Rehabilitation And Reconstruction (IDS)\6 Drawings\Instrumentation And Control\Working\WoodForest\H8108_WDF-I-06.dwg

IDS JOB No. 0057-085-00

PLOTTED: 5/12/2026 9:06 PM

FILE PATH: O:\H8108_Lift Station Rehabilitation And Reconstruction (IDS)\6 Drawings\Instrumentation And Control\Working\WoodForest\H8108_WDF-I-07.dwg

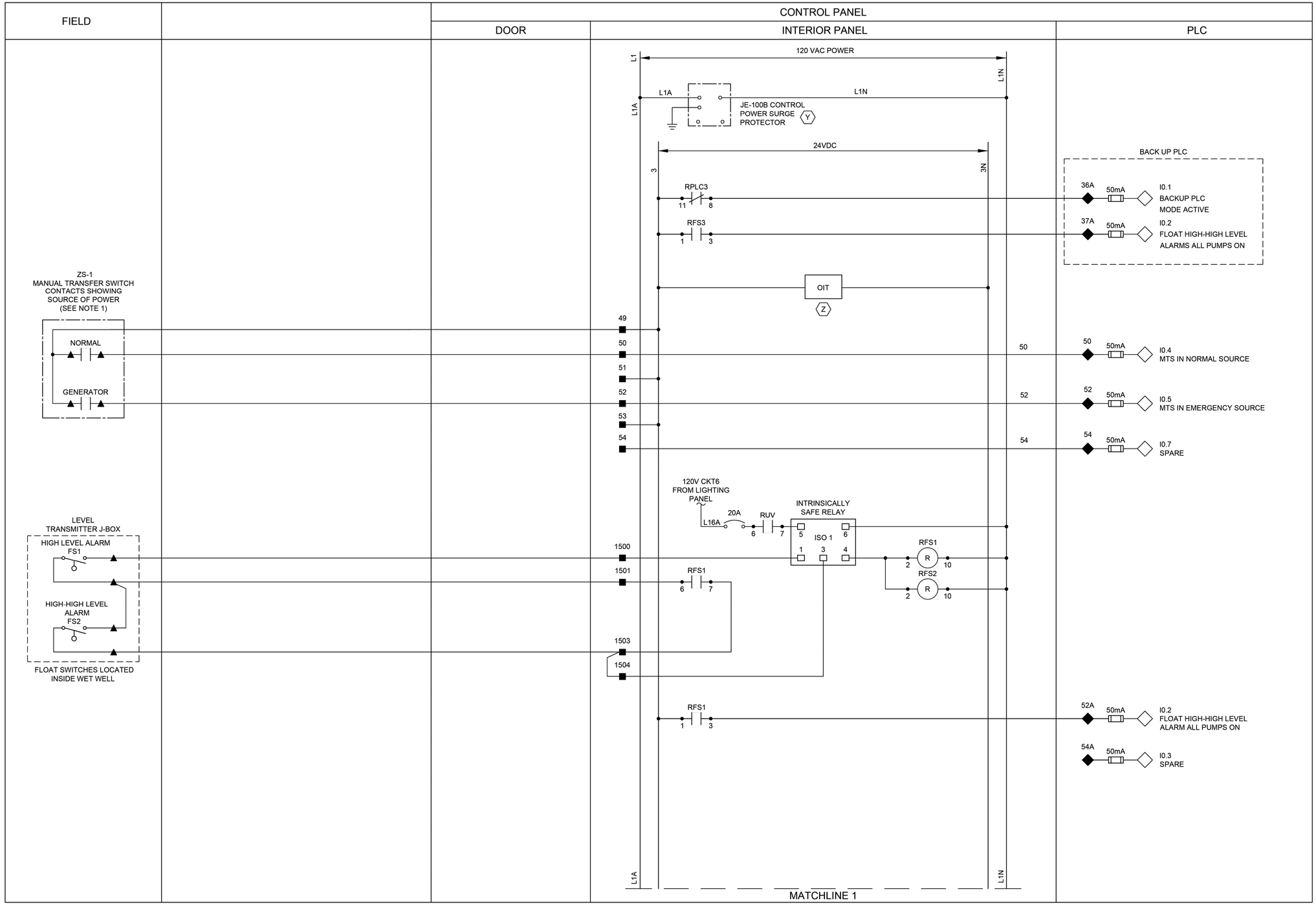

LEGEND

- △ DEVICE OR FIELD TERMINAL LOCATED AT MOTOR
- ✳ DEVICE OR FIELD TERMINAL LOCATED REMOTE
- □ DEVICE OR FIELD TERMINAL LOCATED AT MCC/POWER PANEL
- ■ FIELD TERMINAL LOCATED AT CONTROL PANEL
- ▲ REMOTE TERMINAL
- ● DEVICE TERMINAL NO.
- ◆ PLC INTERFACE TERMINAL

NOTES:

1. PROVIDE AUTO TRANSFER SWITCH DRY CONTACT.
2. ALL FLOAT CONTROL CIRCUIT WIRES COLOR SHALL BE YELLOW.

GENERAL NOTES:

1. NO ELECTRICAL MATERIAL, APPARATUS, DEVICES, APPLIANCES, FIXTURES, OR EQUIPMENT SHALL BE SOLD OR INSTALLED IN THE CITY UNLESS THEY ARE IN CONFORMANCE WITH THE PROVISIONS OF SECTION 508 CITY OF HOUSTON ELECTRICAL CODE, THE LAWS OF THE STATE OF TEXAS AND ANY APPLICABLE RULES AND REGULATIONS ISSUED UNDER THE AUTHORITY OF THE STATE STATUES. THE MAKER'S NAME, TRADEMARK, OR OTHER IDENTIFICATION SYMBOL SHALL BE PLACED ON ALL ELECTRICAL MATERIALS, APPARATUS, DEVICES, APPLIANCES, FIXTURES, AND EQUIPMENT USED OR INSTALLED UNDER THE PROVISIONS OF THIS CODE. ALL ELECTRICAL MATERIALS AND EQUIPMENT SHALL BE LISTED AND LABELED FOR THE INTENDED USE AND SHALL BE INCLUDED IN A LIST PUBLISHED BY AN APPROVAL AGENCY.

NO.	DATE	REVISION	APP.

FOR INTERIM REVIEW
ONLY NOT INTENDED FOR
PERMIT, BIDDING OR
CONSTRUCTION PURPOSES.
ENGINEER:
HOSS FOROUZAN
P.E. SERIAL NO.77748
05/18/2026

GAI
Gupta & Associates, Inc.
CONSULTING ENGINEERING
Registration No. F-2593
302 Dennis St.,
Houston, Texas 77006
Tel: 713-636-2936
Fax: 713-636-2987
email: hforouzan@gaiconsulting.com

IDS Engineering Group
13430 NW. Freeway
Suite 700
Houston, Tx. 77040
713.462.3178
TxEng Firm 2726
TxSurv Firm 10110700

CITY OF HOUSTON
HOUSTON PUBLIC WORKS

LIFT STATION RENEWAL AND REPLACEMENT FY 2023

WOODFOREST LIFT STATION CONTROL PANEL CONTROL WIRING DIAGRAM-I

WBS NUMBER	FOR CITY OF HOUSTON USE ONLY
R-000267-0179-4	
DRAWING SCALE	
HORIZ: NONE VERT: NONE	
CITY OF HOUSTON PM	
NAWARAJ PANTA, P.E.	
SHEET NO. 301 OF 361	

DWG. NO. WDF-I-07

IDS JOB No. 0057-085-00

PLOTTED: 5/12/2026 9:06 PM

FILE PATH: O:\H8108_Lift Station Rehabilitation And Reconstruction (IDS)\6 Drawings\Instrumentation And Control\Working\WoodForest\H8108_WDF-I-08.dwg

FIELD	MOTOR CONTROL CENTER (INDOOR)	CONTROL PANEL	
		DOOR	INTERIOR PANEL

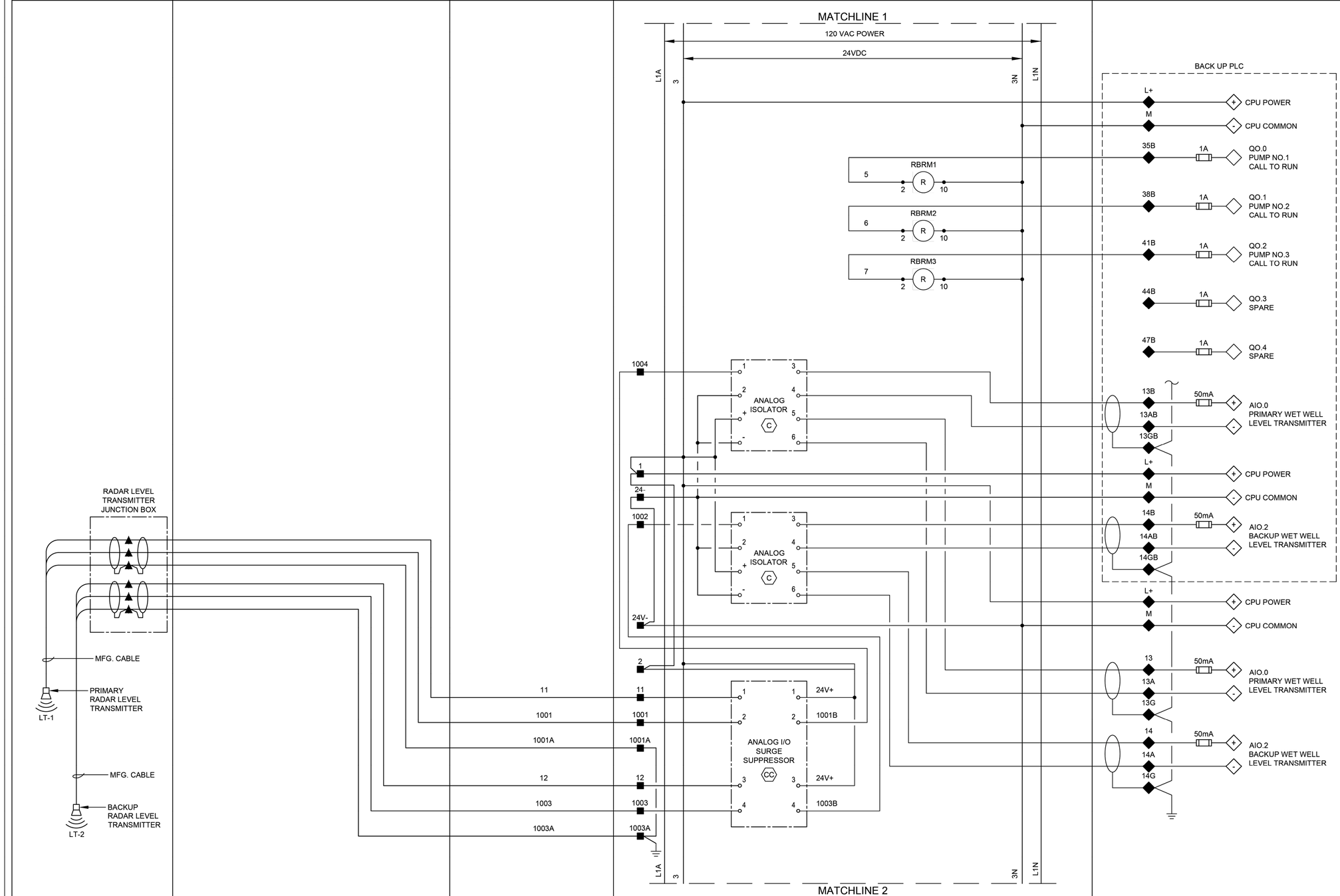

GENERAL NOTES:

1. NO ELECTRICAL MATERIAL, APPARATUS, DEVICES, APPLIANCES, FIXTURES, OR EQUIPMENT SHALL BE SOLD OR INSTALLED IN THE CITY UNLESS THEY ARE IN CONFORMANCE WITH THE PROVISIONS OF SECTION 508 CITY OF HOUSTON ELECTRICAL CODE, THE LAWS OF THE STATE OF TEXAS AND ANY APPLICABLE RULES AND REGULATIONS ISSUED UNDER THE AUTHORITY OF THE STATE STATUES. THE MAKER'S NAME, TRADEMARK, OR OTHER IDENTIFICATION SYMBOL SHALL BE PLACED ON ALL ELECTRICAL MATERIALS, APPARATUS, DEVICES, APPLIANCES, FIXTURES, AND EQUIPMENT USED OR INSTALLED UNDER THE PROVISIONS OF THIS CODE. ALL ELECTRICAL MATERIALS AND EQUIPMENT SHALL BE LISTED AND LABELED FOR THE INTENDED USE AND SHALL BE INCLUDED IN A LIST PUBLISHED BY AN APPROVAL AGENCY.

LEGEND

- △ DEVICE OR FIELD TERMINAL LOCATED AT MOTOR
- ✳ DEVICE OR FIELD TERMINAL LOCATED REMOTE
- □ DEVICE OR FIELD TERMINAL LOCATED AT MCC/POWER PANEL
- ■ FIELD TERMINAL LOCATED AT CONTROL PANEL
- ▲ REMOTE TERMINAL
- ● DEVICE TERMINAL NO.
- ◆ PLC INTERFACE TERMINAL

NO.	DATE	REVISION	APP.

FOR INTERIM REVIEW
ONLY NOT INTENDED FOR
PERMIT, BIDDING OR
CONSTRUCTION PURPOSES.
ENGINEER:
HOSS FOROUZAN
P.E. SERIAL NO.77748
05/18/2026

GAI
Gupta & Associates, Inc.
CONSULTING ENGINEERING
Registration No. F-2593
302 Dennis St.,
Houston, Texas 77006
Tel: 713-636-2916
Fax: 713-636-2987
email: hforouzan@gaiconsulting.com

IDS Engineering Group
13430 NW. Freeway
Suite 700
Houston, Tx. 77040
713.462.3178
TxEng Firm 2726
TxSurv Firm 10110700

CITY OF HOUSTON
HOUSTON PUBLIC WORKS

LIFT STATION RENEWAL AND REPLACEMENT FY 2023

WOODFOREST LIFT STATION CONTROL PANEL CONTROL WIRING DIAGRAM—II

WBS NUMBER	FOR CITY OF HOUSTON USE ONLY
R-000267-0179-4	
DRAWING SCALE	
HORIZ: NONE VERT: NONE	
CITY OF HOUSTON PM	
NAWARAJ PANTA, P.E.	
SHEET NO. 302 OF 361	

DWG. NO. WDF-I-08

IDS JOB No. 0057-085-00

PLOTTED: 5/12/2026 9:06 PM

FILE PATH: O:\H8108_Lift Station Rehabilitation And Reconstruction (IDS)\6 Drawings\Instrumentation And Control\Working\WoodForest\H8108_WDF-I-09.dwg

NO.	DATE	REVISION	APP.

FIELD | MOTOR CONTROL CENTER | CONTROL PANEL: DOOR | CONTROL PANEL: INTERIOR PANEL | PLC

MATCHLINE 2

120 VAC POWER

24VDC

L1A

24+

24-

L1N

M1 M2 9

10

19

20

RFLP R 2 10

1M — DI COMMON

2M — AI COMMON

1L — DO POWER

3 — DO POWER

L1

N

MS

MOTION SWITCH

30 — 1A — Q0.0 SPARE

32 — 50mA — I0.0 PLC INTRUSION ALARM

L1

N

MS

MOTION SWITCH

34

34 — 50mA — I0.1 PHASE FAILURE UNDER VOLTAGE

RUV R 2 10

37 — 50mA — I0.3 SPARE

38 — 50mA — Q0.1 PLC MODE ACTIVE

RPLC1 R 2 10

RPLC2 R 2 10

41 — 50mA — I0.2 SPARE

BACK UP PLC

33B — 50mA — Q0.6 SPARE

YI-1 G PRIMARY PLC

RPLC3 R 2 10

RPLC3 6 5

YI-2 G BACKUP PLC

ØA ØB ØC

JE-2 PHASE MONITOR

7 8 9 10 11 12

N/C

YI-2 BUILDING EXTERIOR ALARM LIGHT R

45 — 50mA — Q0.2 HIGH LEVEL ALARM

BACK UP PLC

18B — 50mA — I0.0 PHASE FAILURE UNDER VOLTAGE

RUV 11 9

L1A 24+ 24- L1N

MATCHLINE 3

LEGEND

- △ DEVICE OR FIELD TERMINAL LOCATED AT MOTOR
- ✳ DEVICE OR FIELD TERMINAL LOCATED REMOTE
- □ DEVICE OR FIELD TERMINAL LOCATED AT MCC/POWER PANEL
- ■ FIELD TERMINAL LOCATED AT CONTROL PANEL
- ▲ REMOTE TERMINAL
- ● DEVICE TERMINAL NO.
- ◆ PLC INTERFACE TERMINAL

GENERAL NOTES:

1. NO ELECTRICAL MATERIAL, APPARATUS, DEVICES, APPLIANCES, FIXTURES, OR EQUIPMENT SHALL BE SOLD OR INSTALLED IN THE CITY UNLESS THEY ARE IN CONFORMANCE WITH THE PROVISIONS OF SECTION 508 CITY OF HOUSTON ELECTRICAL CODE, THE LAWS OF THE STATE OF TEXAS AND ANY APPLICABLE RULES AND REGULATIONS ISSUED UNDER THE AUTHORITY OF THE STATE STATUES. THE MAKER'S NAME, TRADEMARK, OR OTHER IDENTIFICATION SYMBOL SHALL BE PLACED ON ALL ELECTRICAL MATERIALS, APPARATUS, DEVICES, APPLIANCES, FIXTURES, AND EQUIPMENT USED OR INSTALLED UNDER THE PROVISIONS OF THIS CODE. ALL ELECTRICAL MATERIALS AND EQUIPMENT SHALL BE LISTED AND LABELED FOR THE INTENDED USE AND SHALL BE INCLUDED IN A LIST PUBLISHED BY AN APPROVAL AGENCY.

FOR INTERIM REVIEW
ONLY NOT INTENDED FOR
PERMIT, BIDDING OR
CONSTRUCTION PURPOSES.
ENGINEER:
HOSS FOROUZAN
P.E. SERIAL NO.77748
05/18/2026

GAI
Gupta & Associates, Inc.
CONSULTING ENGINEERING
Registration No. F-2593
302 Dennis St.,
Houston, Texas 77006
Tel: 713-636-2936
Fax: 713-636-2987
email: hforouzan@gaiconsulting.com

IDS Engineering Group
13430 NW. Freeway
Suite 700
Houston, Tx. 77040
713.462.3178
TxEng Firm 2726
TxSurv Firm 10110700

CITY OF HOUSTON
HOUSTON PUBLIC WORKS

LIFT STATION RENEWAL
AND REPLACEMENT FY 2023

WOODFOREST LIFT STATION CONTROL PANEL CONTROL WIRING DIAGRAM—III

WBS NUMBER	FOR CITY OF HOUSTON USE ONLY
R-000267-0179-4	
DRAWING SCALE	
HORIZ: NONE VERT: NONE	
CITY OF HOUSTON PM	
NAWARAJ PANTA, P.E.	
SHEET NO. 303 OF 361	

DWG. NO. WDF-I-09

IDS JOB No. 0057-085-00

PLOTTED: 5/12/2026 9:06 PM

FILE PATH: O:\H8108_Lift Station Rehabilitation And Reconstruction (IDS)\6 Drawings\Instrumentation And Control\Working\WoodForest\H8108_WDF-I-10.dwg

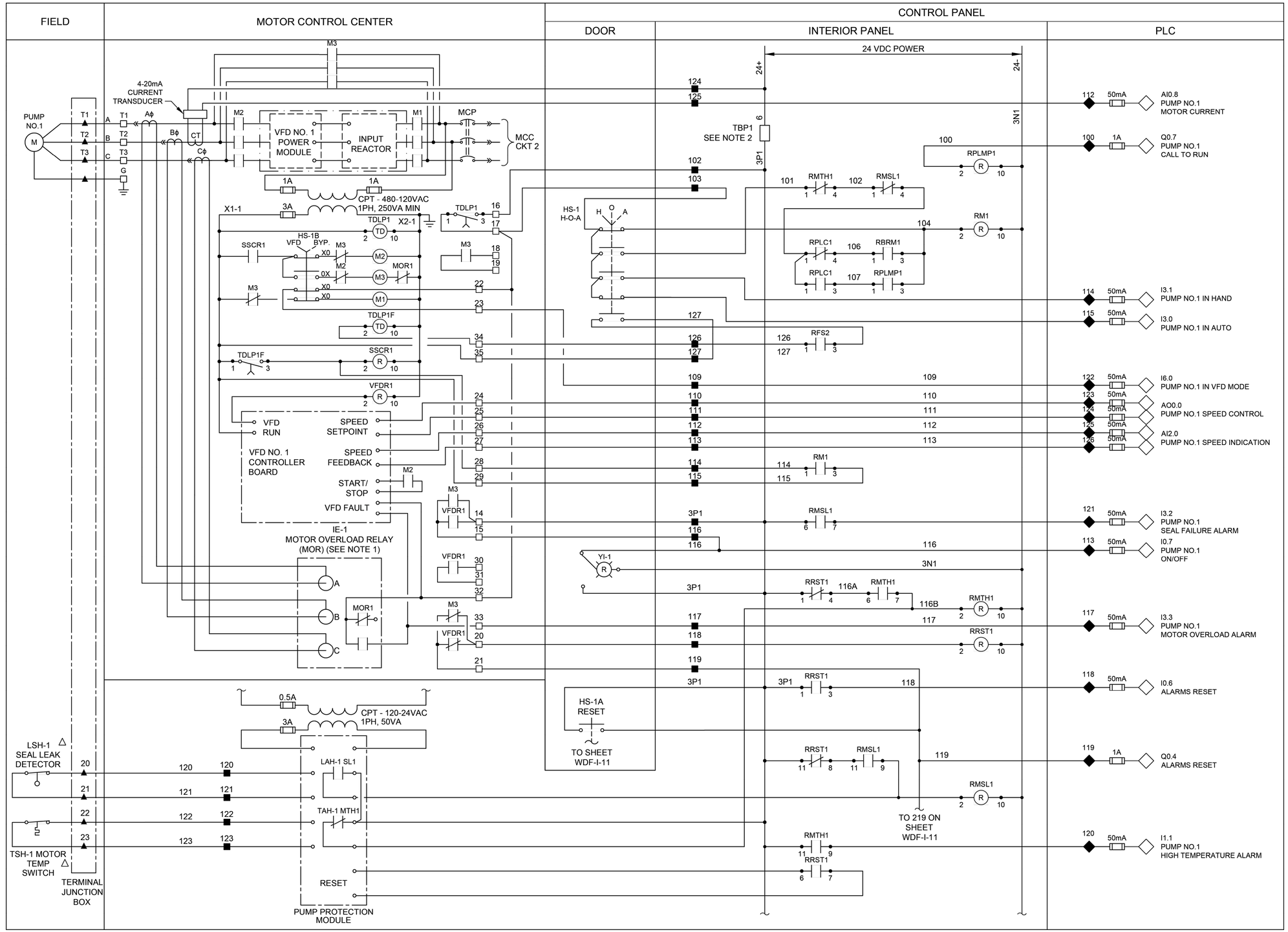

LEGEND

- △ DEVICE OR FIELD TERMINAL LOCATED AT MOTOR
- ✳ DEVICE OR FIELD TERMINAL LOCATED REMOTE
- □ DEVICE OR FIELD TERMINAL LOCATED AT MCC/POWER PANEL
- ■ FIELD TERMINAL LOCATED AT CONTROL PANEL
- ▲ REMOTE TERMINAL
- ● DEVICE TERMINAL NO.
- ◆ PLC INTERFACE TERMINAL

NOTES:

1. MOTOR OVERLOAD RELAY OUTPUT CONTACT SHOWN NORMALLY CLOSED WHEN RELAY IS DE-ENERGIZED, OPEN WHEN ENERGIZED, AND CLOSED WHEN IN ALARM. VERIFY OPERATION OF RELAY PROVIDED AND ADJUST CONNECTION OF RMOR AUXILIARY RELAYS.
2. FUSED TERMINAL ON TERMINAL BLOCK TB4 SEE CONTROL POWER AND COMMUNICATION WIRING DIAGRAM DRAWING NO. WDF-I-3.
3. ALL FLOAT CONTROL CIRCUIT WIRES COLOR SHALL BE YELLOW.

GENERAL NOTES:

1. NO ELECTRICAL MATERIAL, APPARATUS, DEVICES, APPLIANCES, FIXTURES, OR EQUIPMENT SHALL BE SOLD OR INSTALLED IN THE CITY UNLESS THEY ARE IN CONFORMANCE WITH THE PROVISIONS OF SECTION 508 CITY OF HOUSTON ELECTRICAL CODE, THE LAWS OF THE STATE OF TEXAS AND ANY APPLICABLE RULES AND REGULATIONS ISSUED UNDER THE AUTHORITY OF THE STATE STATUES. THE MAKER'S NAME, TRADEMARK, OR OTHER IDENTIFICATION SYMBOL SHALL BE PLACED ON ALL ELECTRICAL MATERIALS, APPARATUS, DEVICES, APPLIANCES, FIXTURES, AND EQUIPMENT USED OR INSTALLED UNDER THE PROVISIONS OF THIS CODE. ALL ELECTRICAL MATERIALS AND EQUIPMENT SHALL BE LISTED AND LABELED FOR THE INTENDED USE AND SHALL BE INCLUDED IN A LIST PUBLISHED BY AN APPROVAL AGENCY.

NO.	DATE	REVISION	APP.

FOR INTERIM REVIEW
ONLY NOT INTENDED FOR
PERMIT, BIDDING OR
CONSTRUCTION PURPOSES.
ENGINEER:
HOSS FOROUZAN
P.E. SERIAL NO.77748
05/18/2026

GAI
Gupta & Associates, Inc.
CONSULTING ENGINEERING
Registration No. F-2593
302 Dennis St.,
Houston, Texas 77006
Tel: 713-636-2936
Fax: 713-636-2987
email: hforouzan@gaiconsulting.com

IDS Engineering Group
13430 NW. Freeway
Suite 700
Houston, Tx. 77040
713.462.3178
TxEng Firm 2726
TxSurv Firm 10110700

CITY OF HOUSTON
HOUSTON PUBLIC WORKS

LIFT STATION RENEWAL
AND REPLACEMENT FY 2023

WOODFOREST LIFT STATION PUMP NO.1 CONTROL WIRING DIAGRAM

WBS NUMBER	FOR CITY OF HOUSTON USE ONLY
R-000267-0179-4	
DRAWING SCALE	
HORIZ: NONE VERT: NONE	
CITY OF HOUSTON PM	
NAWARAJ PANTA, P.E.	
SHEET NO. 304 OF 361	

DWG. NO. WDF-I-10

IDS JOB No. 0057-085-00

PLOTTED: 5/12/2026 9:06 PM

FILE PATH: O:\H8108_Lift Station Rehabilitation And Reconstruction (IDS)\6 Drawings\Instrumentation And Control\Working\WoodForest\H8108_WDF-I-11.dwg

FIELD | MOTOR CONTROL CENTER | CONTROL PANEL — DOOR | INTERIOR PANEL | PLC

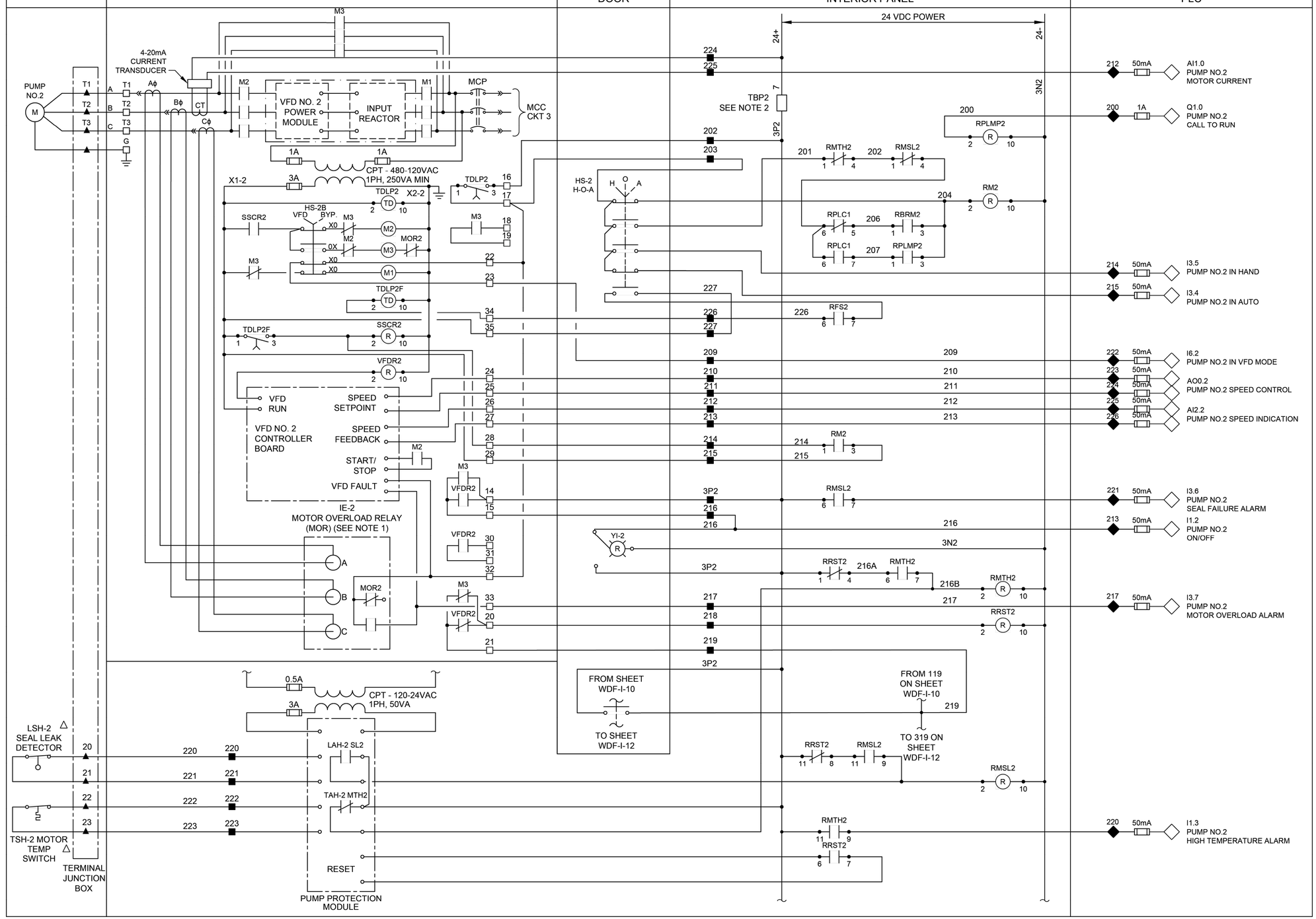

NOTES:

1. MOTOR OVERLOAD RELAY OUTPUT CONTACT SHOWN NORMALLY CLOSED WHEN RELAY IS DE-ENERGIZED, OPEN WHEN ENERGIZED, AND CLOSED WHEN IN ALARM. VERIFY OPERATION OF RELAY PROVIDED AND ADJUST CONNECTION OF RMOR AUXILIARY RELAYS.
2. FUSED TERMINAL ON TERMINAL BLOCK TB4 SEE CONTROL POWER AND COMMUNICATION WIRING DIAGRAM DRAWING NO. WDF-I-3.
3. ALL FLOAT CONTROL CIRCUIT WIRES COLOR SHALL BE YELLOW.

GENERAL NOTES:

1. NO ELECTRICAL MATERIAL, APPARATUS, DEVICES, APPLIANCES, FIXTURES, OR EQUIPMENT SHALL BE SOLD OR INSTALLED IN THE CITY UNLESS THEY ARE IN CONFORMANCE WITH THE PROVISIONS OF SECTION 508 CITY OF HOUSTON ELECTRICAL CODE, THE LAWS OF THE STATE OF TEXAS AND ANY APPLICABLE RULES AND REGULATIONS ISSUED UNDER THE AUTHORITY OF THE STATE STATUES. THE MAKER'S NAME, TRADEMARK, OR OTHER IDENTIFICATION SYMBOL SHALL BE PLACED ON ALL ELECTRICAL MATERIALS, APPARATUS, DEVICES, APPLIANCES, FIXTURES, AND EQUIPMENT USED OR INSTALLED UNDER THE PROVISIONS OF THIS CODE. ALL ELECTRICAL MATERIALS AND EQUIPMENT SHALL BE LISTED AND LABELED FOR THE INTENDED USE AND SHALL BE INCLUDED IN A LIST PUBLISHED BY AN APPROVAL AGENCY.

LEGEND

- △ DEVICE OR FIELD TERMINAL LOCATED AT MOTOR
- ✳ DEVICE OR FIELD TERMINAL LOCATED REMOTE
- □ DEVICE OR FIELD TERMINAL LOCATED AT MCC/POWER PANEL
- ■ FIELD TERMINAL LOCATED AT CONTROL PANEL
- ▲ REMOTE TERMINAL
- ● DEVICE TERMINAL NO.
- ◆ PLC INTERFACE TERMINAL

NO.	DATE	REVISION	APP.

FOR INTERIM REVIEW
ONLY NOT INTENDED FOR
PERMIT, BIDDING OR
CONSTRUCTION PURPOSES.
ENGINEER:
HOSS FOROUZAN
P.E. SERIAL NO.77748
05/18/2026

GAI
Gupta & Associates, Inc.
CONSULTING ENGINEERING
Registration No. F-2593
302 Dennis St.,
Houston, Texas 77006
Tel: 713-636-2936
Fax: 713-636-2987
email: hforouzan@gaiconsulting.com

IDS Engineering Group
13430 NW. Freeway
Suite 700
Houston, Tx. 77040
713.462.3178
TxEng Firm 2726
TxSurv Firm 10110700

CITY OF HOUSTON
HOUSTON PUBLIC WORKS

LIFT STATION RENEWAL AND REPLACEMENT FY 2023

WOODFOREST LIFT STATION PUMP NO.2 CONTROL WIRING DIAGRAM

WBS NUMBER	FOR CITY OF HOUSTON USE ONLY
R-000267-0179-4	
DRAWING SCALE	
HORIZ: NONE VERT: NONE	
CITY OF HOUSTON PM	
NAWARAJ PANTA, P.E.	
SHEET NO. 305 OF 361	

DWG. NO. WDF-I-11

IDS JOB No. 0057-085-00

PLOTTED: 5/12/2026 9:06 PM

FILE PATH: O:\H8108_Lift Station Rehabilitation And Reconstruction (IDS)\6 Drawings\Instrumentation And Control\Working\WoodForest\H8108_WDF-I-12.dwg

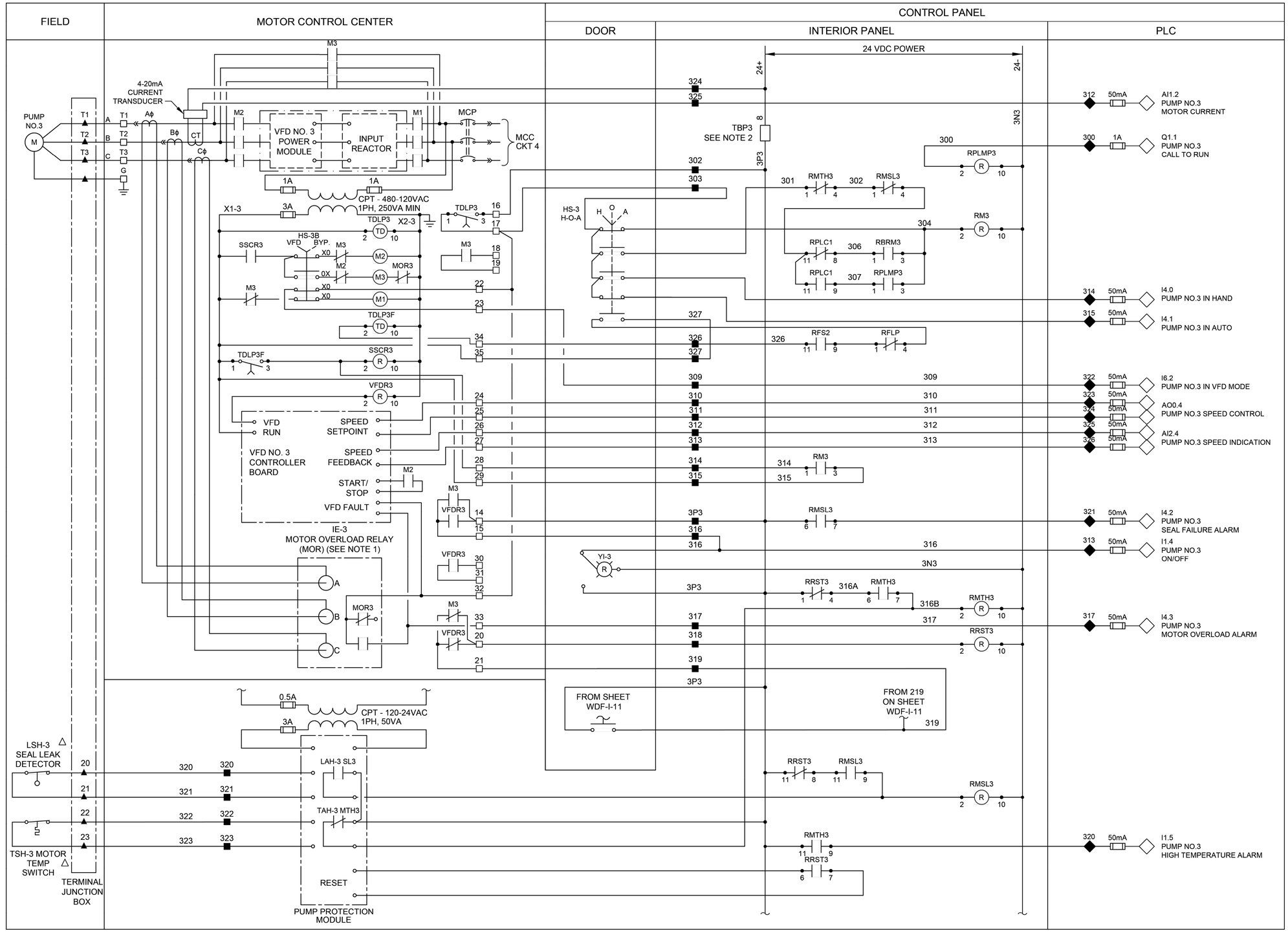

LEGEND

- △ DEVICE OR FIELD TERMINAL LOCATED AT MOTOR
- ✳ DEVICE OR FIELD TERMINAL LOCATED REMOTE
- □ DEVICE OR FIELD TERMINAL LOCATED AT MCC/POWER PANEL
- ■ FIELD TERMINAL LOCATED AT CONTROL PANEL
- ▲ REMOTE TERMINAL
- ● DEVICE TERMINAL NO.
- ◆ PLC INTERFACE TERMINAL

NOTES:

1. MOTOR OVERLOAD RELAY OUTPUT CONTACT SHOWN NORMALLY CLOSED WHEN RELAY IS DE-ENERGIZED, OPEN WHEN ENERGIZED, AND CLOSED WHEN IN ALARM. VERIFY OPERATION OF RELAY PROVIDED AND ADJUST CONNECTION OF RMOR AUXILIARY RELAYS.
2. FUSED TERMINAL ON TERMINAL BLOCK TB4 SEE CONTROL POWER AND COMMUNICATION WIRING DIAGRAM DRAWING NO. WDF-I-3.
3. ALL FLOAT CONTROL CIRCUIT WIRES COLOR SHALL BE YELLOW.

GENERAL NOTES:

1. NO ELECTRICAL MATERIAL, APPARATUS, DEVICES, APPLIANCES, FIXTURES, OR EQUIPMENT SHALL BE SOLD OR INSTALLED IN THE CITY UNLESS THEY ARE IN CONFORMANCE WITH THE PROVISIONS OF SECTION 508 CITY OF HOUSTON ELECTRICAL CODE, THE LAWS OF THE STATE OF TEXAS AND ANY APPLICABLE RULES AND REGULATIONS ISSUED UNDER THE AUTHORITY OF THE STATE STATUES. THE MAKER'S NAME, TRADEMARK, OR OTHER IDENTIFICATION SYMBOL SHALL BE PLACED ON ALL ELECTRICAL MATERIALS, APPARATUS, DEVICES, APPLIANCES, FIXTURES, AND EQUIPMENT USED OR INSTALLED UNDER THE PROVISIONS OF THIS CODE. ALL ELECTRICAL MATERIALS AND EQUIPMENT SHALL BE LISTED AND LABELED FOR THE INTENDED USE AND SHALL BE INCLUDED IN A LIST PUBLISHED BY AN APPROVAL AGENCY.

NO.	DATE	REVISION	APP.

FOR INTERIM REVIEW
ONLY NOT INTENDED FOR
PERMIT, BIDDING OR
CONSTRUCTION PURPOSES.
ENGINEER:
HOSS FOROUZAN
P.E. SERIAL NO.77748
05/18/2026

GAI
Gupta & Associates, Inc.
CONSULTING ENGINEERING
Registration No. F-2593
302 Dennis St.,
Houston, Texas 77006
Tel: 713-636-2936
Fax: 713-636-2987
email: hforouzan@gaiconsulting.com

IDS Engineering Group
13430 NW. Freeway
Suite 700
Houston, Tx. 77040
713.462.3178
TxEng Firm 2726
TxSurv Firm 10110700

CITY OF HOUSTON
HOUSTON PUBLIC WORKS

LIFT STATION RENEWAL AND REPLACEMENT FY 2023

WOODFOREST LIFT STATION PUMP NO.3 CONTROL WIRING DIAGRAM

WBS NUMBER	FOR CITY OF HOUSTON USE ONLY
R-000267-0179-4	
DRAWING SCALE	
HORIZ: NONE VERT: NONE	
CITY OF HOUSTON PM	
NAWARAJ PANTA, P.E.	
SHEET NO. 306 OF 361	

DWG. NO. WDF-I-12

IDS JOB No. 0057-085-00

PLOTTED: 5/12/2026 9:06 PM

FILE PATH: O:\H8108_Lift Station Rehabilitation And Reconstruction (IDS)\6 Drawings\Instrumentation And Control\Working\WoodForest\H8108_WDF-I-13.dwg

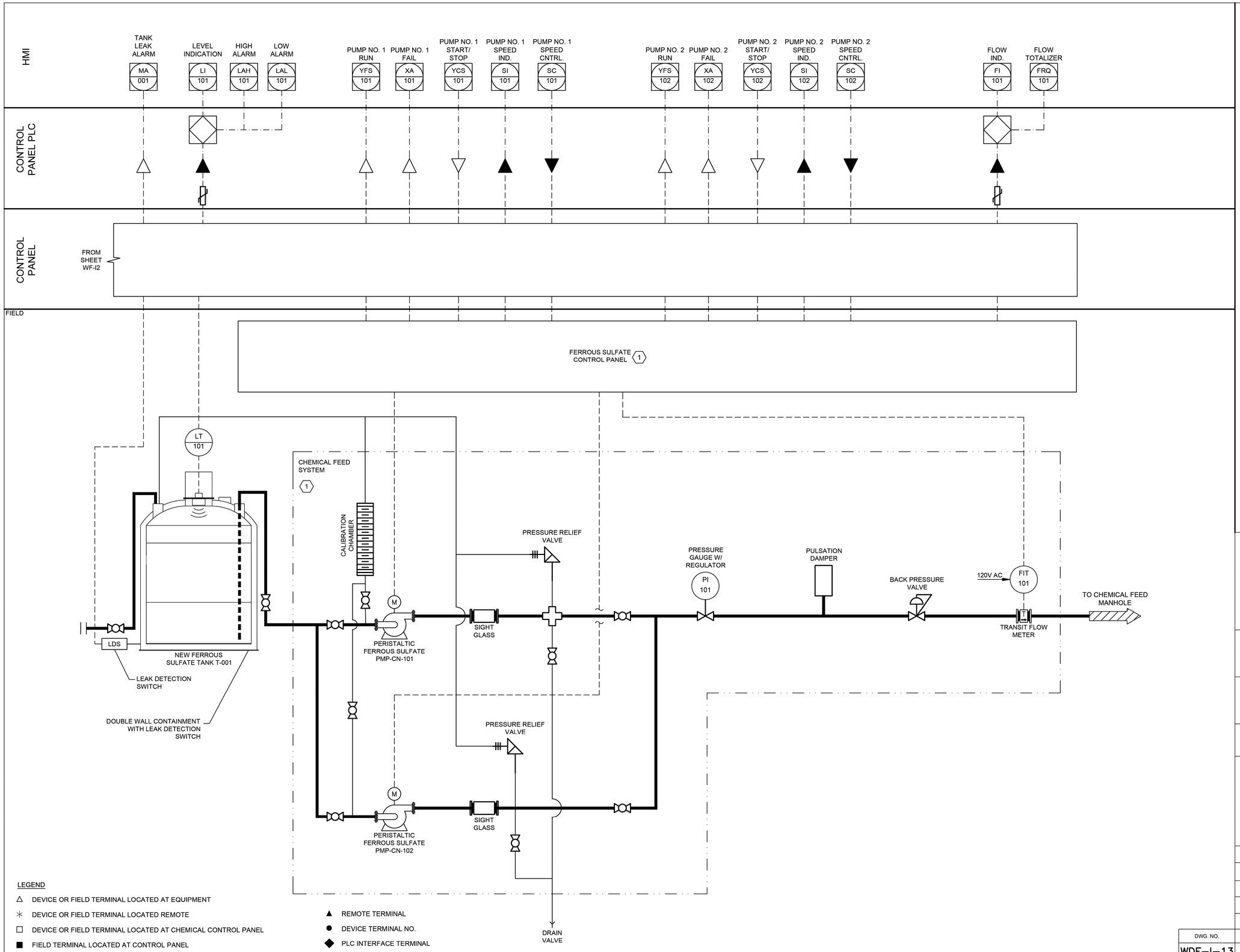

LEGEND

- △ DEVICE OR FIELD TERMINAL LOCATED AT EQUIPMENT
- ✳ DEVICE OR FIELD TERMINAL LOCATED REMOTE
- □ DEVICE OR FIELD TERMINAL LOCATED AT CHEMICAL CONTROL PANEL
- ■ FIELD TERMINAL LOCATED AT CONTROL PANEL
- ▲ REMOTE TERMINAL
- ● DEVICE TERMINAL NO.
- ◆ PLC INTERFACE TERMINAL

NO.	DATE	REVISION	APP.

NOTES:

1. TO BE PROVIDED BY CHEMICAL FEED SYSTEM MANUFACTURER.

GENERAL NOTES:

1. NO ELECTRICAL MATERIAL, APPARATUS, DEVICES, APPLIANCES, FIXTURES, OR EQUIPMENT SHALL BE SOLD OR INSTALLED IN THE CITY UNLESS THEY ARE IN CONFORMANCE WITH THE PROVISIONS OF SECTION 508 CITY OF HOUSTON ELECTRICAL CODE, THE LAWS OF THE STATE OF TEXAS AND ANY APPLICABLE RULES AND REGULATIONS ISSUED UNDER THE AUTHORITY OF THE STATE STATUES. THE MAKER'S NAME, TRADEMARK, OR OTHER IDENTIFICATION SYMBOL SHALL BE PLACED ON ALL ELECTRICAL MATERIALS, APPARATUS, DEVICES, APPLIANCES, FIXTURES, AND EQUIPMENT USED OR INSTALLED UNDER THE PROVISIONS OF THIS CODE. ALL ELECTRICAL MATERIALS AND EQUIPMENT SHALL BE LISTED AND LABELED FOR THE INTENDED USE AND SHALL BE INCLUDED IN A LIST PUBLISHED BY AN APPROVAL AGENCY.

FOR INTERIM REVIEW
ONLY NOT INTENDED FOR
PERMIT, BIDDING OR
CONSTRUCTION PURPOSES.
ENGINEER:
HOSS FOROUZAN
P.E. SERIAL NO.77748
05/18/2026

GAI
Gupta & Associates, Inc.
CONSULTING ENGINEERING
Registration No. F-2593
302 Dennis St.,
Houston, Texas 77006
Tel: 713-636-2936
Fax: 713-636-2987
email: hforouzan@gaiconsulting.com

IDS Engineering Group
13430 NW. Freeway
Suite 700
Houston, Tx. 77040
713.462.3178
TxEng Firm 2726
TxSurv Firm 10110700

CITY OF HOUSTON
HOUSTON PUBLIC WORKS

LIFT STATION RENEWAL AND REPLACEMENT FY 2023

WOODFOREST LIFT STATION FERROUS SULFATE FEED PUMPS P&ID DIAGRAM

WBS NUMBER	FOR CITY OF HOUSTON USE ONLY
R-000267-0179-4	
DRAWING SCALE	
HORIZ: NONE VERT: NONE	
CITY OF HOUSTON PM	
NAWARAJ PANTA, P.E.	
DWG. NO. WDF-I-13	SHEET NO. 307 OF 361

IDS JOB No. 0057-085-00

PLOTTED: 5/12/2026 9:06 PM

FILE PATH: O:\H8108_Lift Station Rehabilitation And Reconstruction (IDS)\6 Drawings\Instrumentation And Control\Working\WoodForest\H8108_WDF-I-14.dwg

NO.	DATE	REVISION	APP.

FIELD | CHEMICAL FEED CONTROL BUILDING | CONTROL PANEL: INTERIOR PANEL | CONTROL PANEL: PLC

MATCHLINE 3

120 VAC POWER

24 VDC

LT-001
LOCATED AT
CHEMICAL TANK

FERROUS SULFATE
FEED PUMP CP

FI
101

120V

FE

T-001
LDS TANK

PUMP NO.1
ANALOG OUPUT

PUMP NO.1
ANALOG INPUT

PUMP NO.2
ANALOG OUPUT

PUMP NO.2
ANALOG INPUT

H N M1

H N M2

CR201

CR109

CR210

CR110

L1A 3

3N L1N

800 801 802 803 804 805 806 807 808 809 810 811 812 822 813 814 815 816 817 818 819 820 821

1 2 3 4 EE 24V-

RPSN1 RPSN2 R 2 10

REMOTE I/O

15	50mA	AI3.6	FERROUS SULFATE TANK T-001 LEVEL TRANSMITTER LT-101
15A			
15G			
16	50mA	AI3.8	FERROUS SULFATE FLOW TRANSMITTER FIT-101
16A			
16G			
800 1A		Q3.0	FERROUS SULFATE NO. 1 CALL TO RUN
801 1A		Q3.1	FERROUS SULFATE NO. 2 CALL TO RUN
700 1A		I7.5	FERROUS SULFATE PUMP NO.1 RUN
701 1A		I7.6	FERROUS SULFATE PUMP NO.1 FAIL
702 1A		I7.7	FERROUS SULFATE PUMP NO.2 RUN
703 1A		I8.0	FERROUS SULFATE PUMP NO.2 FAIL
704 1A		I8.1	FERROUS SULFATE TANK T-001 LEAK ALARM
17	50mA	AI3.2	FERROUS SULFATE NO. 1 SPEED INDICATION
17A			
18	50mA	AO0.0	FERROUS SULFATE NO. 1 SPEED CONTROL
18A			
19	50mA	AI3.4	FERROUS SULFATE NO. 2 SPEED INDICATION
19A			
20	50mA	AO0.2	FERROUS SULFATE NO. 2 SPEED CONTROL
20A			

GENERAL NOTES:

1. NO ELECTRICAL MATERIAL, APPARATUS, DEVICES, APPLIANCES, FIXTURES, OR EQUIPMENT SHALL BE SOLD OR INSTALLED IN THE CITY UNLESS THEY ARE IN CONFORMANCE WITH THE PROVISIONS OF SECTION 508 CITY OF HOUSTON ELECTRICAL CODE, THE LAWS OF THE STATE OF TEXAS AND ANY APPLICABLE RULES AND REGULATIONS ISSUED UNDER THE AUTHORITY OF THE STATE STATUES. THE MAKER'S NAME, TRADEMARK, OR OTHER IDENTIFICATION SYMBOL SHALL BE PLACED ON ALL ELECTRICAL MATERIALS, APPARATUS, DEVICES, APPLIANCES, FIXTURES, AND EQUIPMENT USED OR INSTALLED UNDER THE PROVISIONS OF THIS CODE. ALL ELECTRICAL MATERIALS AND EQUIPMENT SHALL BE LISTED AND LABELED FOR THE INTENDED USE AND SHALL BE INCLUDED IN A LIST PUBLISHED BY AN APPROVAL AGENCY.

LEGEND

△ DEVICE OR FIELD TERMINAL LOCATED AT EQUIPMENT

✳ DEVICE OR FIELD TERMINAL LOCATED REMOTE

□ DEVICE OR FIELD TERMINAL LOCATED AT CHEMICAL CONTROL PANEL

■ FIELD TERMINAL LOCATED AT CONTROL PANEL

▲ REMOTE TERMINAL

● DEVICE TERMINAL NO.

◆ PLC INTERFACE TERMINAL

FOR INTERIM REVIEW
ONLY NOT INTENDED FOR
PERMIT, BIDDING OR
CONSTRUCTION PURPOSES.
ENGINEER:
HOSS FOROUZAN
P.E. SERIAL NO.77748
05/18/2026

GAI
Gupta & Associates, Inc.
CONSULTING ENGINEERING
Registration No. F-2593
302 Dennis St.,
Houston, Texas 77006
Tel: 713-636-2936
Fax: 713-636-2987
email: hforouzan@gaiconsulting.com

IDS Engineering Group
13430 NW. Freeway
Suite 700
Houston, Tx. 77040
713.462.3178
TxEng Firm 2726
TxSurv Firm 10110700

CITY OF HOUSTON
HOUSTON PUBLIC WORKS

LIFT STATION RENEWAL
AND REPLACEMENT FY 2023

WOODFOREST LIFT STATION FERROUS SULFATE FEED PUMPS WIRING DIAGRAM

WBS NUMBER	FOR CITY OF HOUSTON USE ONLY
R-000267-0179-4	
DRAWING SCALE	
HORIZ: NONE VERT: NONE	
CITY OF HOUSTON PM	
NAWARAJ PANTA, P.E.	
SHEET NO. 308 OF 361	

DWG. NO. WDF-I-14

IDS JOB No. 0057-085-00

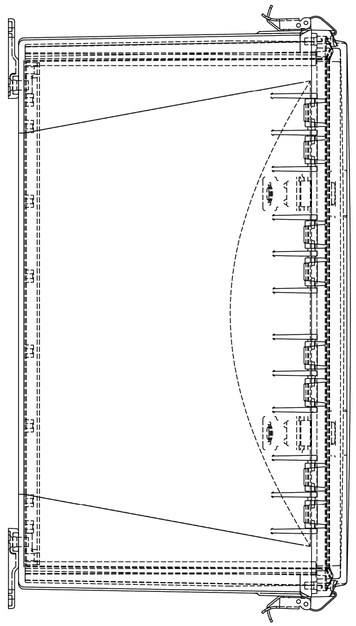

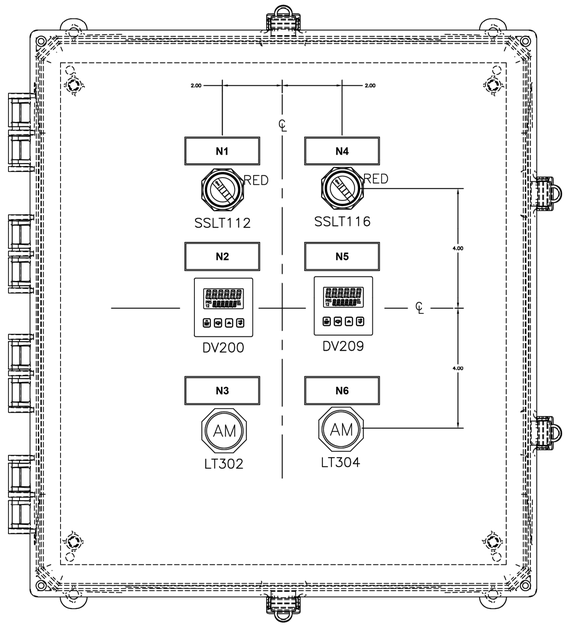

TYPE 4X ENCLOSURE
18x16x10

CHEMICAL FEED PUMP CONTROL PANEL

DETAIL 1 / NTS –

CHEMICAL FEED PUMP CONTROL PANEL

DESIGNATION	ENGRAVED
N1	PUMP A HAND-OFF-REMOTE
N2	PUMP A SPEED
N3	PUMP A ALARM
N4	PUMP B HAND-OFF-REMOTE
N5	PUMP B SPEED
N6	PUMP B ALARM

GENERAL NOTES:

1. NO ELECTRICAL MATERIAL, APPARATUS, DEVICES, APPLIANCES, FIXTURES, OR EQUIPMENT SHALL BE SOLD OR INSTALLED IN THE CITY UNLESS THEY ARE IN CONFORMANCE WITH THE PROVISIONS OF SECTION 508 CITY OF HOUSTON ELECTRICAL CODE, THE LAWS OF THE STATE OF TEXAS AND ANY APPLICABLE RULES AND REGULATIONS ISSUED UNDER THE AUTHORITY OF THE STATE STATUES. THE MAKER'S NAME, TRADEMARK, OR OTHER IDENTIFICATION SYMBOL SHALL BE PLACED ON ALL ELECTRICAL MATERIALS, APPARATUS, DEVICES, APPLIANCES, FIXTURES, AND EQUIPMENT USED OR INSTALLED UNDER THE PROVISIONS OF THIS CODE. ALL ELECTRICAL MATERIALS AND EQUIPMENT SHALL BE LISTED AND LABELED FOR THE INTENDED USE AND SHALL BE INCLUDED IN A LIST PUBLISHED BY AN APPROVAL AGENCY.

NO.	DATE	REVISION	APP.

FOR INTERIM REVIEW
ONLY NOT INTENDED FOR
PERMIT, BIDDING OR
CONSTRUCTION PURPOSES.
ENGINEER:
HOSS FOROUZAN
P.E. SERIAL NO.77748
05/18/2026

GAI
Gupta & Associates, Inc.
CONSULTING ENGINEERING
Registration No. F-2593
302 Dennis St.,
Houston, Texas 77006
Tel: 713-636-2936
Fax: 713-636-2987
email: hforouzan@gaiconsulting.com

IDS Engineering Group
13430 NW. Freeway
Suite 700
Houston, Tx. 77040
713.462.3178
TxEng Firm 2726
TxSurv Firm 10110700

CITY OF HOUSTON
HOUSTON PUBLIC WORKS

LIFT STATION RENEWAL
AND REPLACEMENT FY 2023

WOODFOREST LIFT STATION FERROUS SULFATE FEED PUMPS CONTROL PANEL

WBS NUMBER	FOR CITY OF HOUSTON USE ONLY
R–000267–0179–4	
DRAWING SCALE	
HORIZ: NTS VERT: NTS	
CITY OF HOUSTON PM	
NAWARAJ PANTA, P.E.	

DWG. NO. WDF–I–15

SHEET NO. 309 OF 361

IDS JOB No. 0057-085-00

PLOTTED: 5/12/2026 9:06 PM

FILE PATH: O:\H8108_Lift Station Rehabilitation And Reconstruction (IDS)\6 Drawings\Instrumentation And Control\Working\WoodForest\H8108_WDF–I–15.dwg

PLOTTED: 5/13/2026 6:49 PM

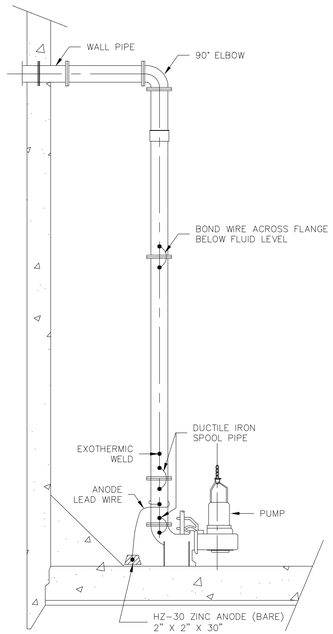

1 WET WELL DIRECT CONNECT ANODE INSTALLATION

Scale: N.T.S.
File:

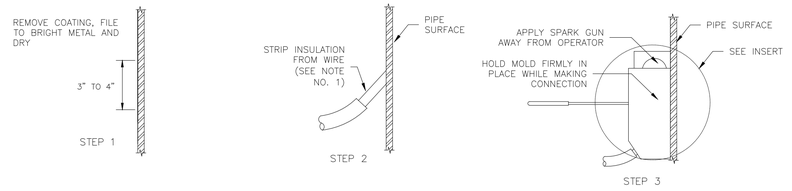

NOTES:
1. FOR #14 AWG SOLID TO #10 STRANDED WIRE CRIMP A PROPERLY SIZED COPPER SLEEVE OVER BARE WIRE.
2. THERMITE WELD PROCEDURES SIMILAR FOR "L" BRACKETS.
3. REPAIR ALL DAMAGE TO COATING AND LINING IN ACCORDANCE WITH MANUFACTURER'S RECOMMENDATIONS.
4. CUT LENGTH OF STOPAQ CZ TAPE TO FIT DAMAGED COATING AREA INCLUDING THERMITE WELD AND ANY EXPOSED METAL. REMOVE CLEAR BACKING FROM TAPE AND APPLY TO DAMAGED AREAS. MOLD AND SHAPE TAPE TO FIT ALL BARE METAL AREAS.

2 VERTICAL THERMITE BRAZED CONNECTION

Scale: N.T.S.
File:

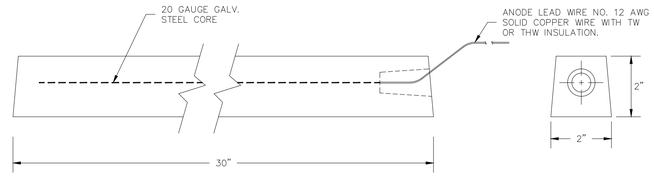

3 WET WELL ANODE DETAIL HZ-30 ZINC ANODE (BARE)

Scale: N.T.S.
File:

NOTES:
1. PROVIDE 4" ABRASIVE (NON –SLIP)NOSING (TYP) 4" FROM WALL, CURB OR EDGE.
2. STAIR WIDTH SHALL BE 3'.
3. TYPICAL RISER HEIGHT SHALL BE 7" MAX.
4. #5 DOWELS @ 2'–0" W/4" MIN EMBED IN EACH DIRECTION.
5. MINIMUM COMPRESSIVE STRENGTH OF CONCRETE IS 3,000 PSI.
6. FOR THE NUMBER OF PROPOSED STEPS, REFER TO PROPOSED SITE PLAN.

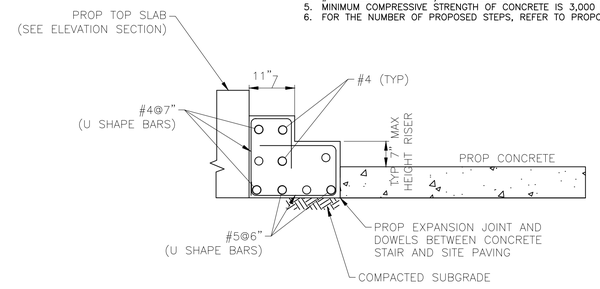

4 CONCRETE STAIR DETAIL

Scale: N.T.S.
File:

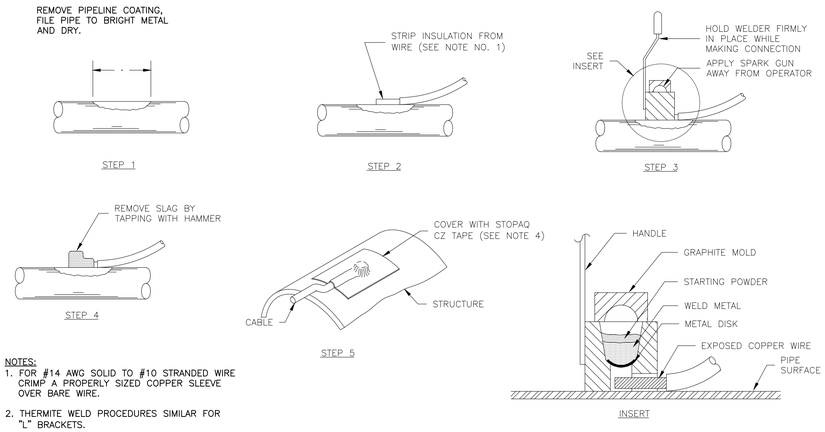

NOTES:
1. FOR #14 AWG SOLID TO #10 STRANDED WIRE CRIMP A PROPERLY SIZED COPPER SLEEVE OVER BARE WIRE.
2. THERMITE WELD PROCEDURES SIMILAR FOR "L" BRACKETS.
3. REPAIR ALL DAMAGE TO COATING AND LINING IN ACCORDANCE WITH MANUFACTURER'S RECOMMENDATIONS.
4. CUT LENGTH OF STOPAQ CZ TAPE TO FIT DAMAGED COATING AREA INCLUDING THERMITE WELD AND ANY EXPOSED METAL. REMOVE CLEAR BACKING FROM TAPE AND APPLY TO DAMAGED AREAS. MOLD AND SHAPE TAPE TO FIT ALL BARE METAL AREAS.

5 HORIZONTAL THERMITE BRAZED CONNECTION

Scale: N.T.S.
File:

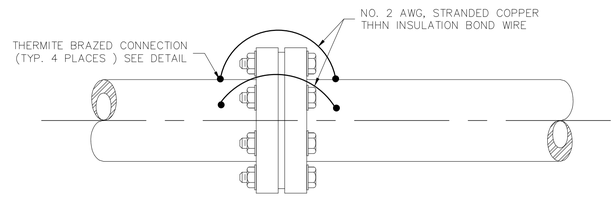

NOTE: BOND WIRES SHALL BE PLACED A MINIMUM OF 6" APART.

6 ELECTRICAL BONDING ACROSS FLANGE

Scale: N.T.S.
File:

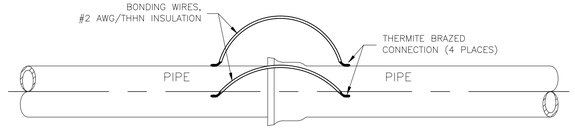

NOTE: BOND WIRES SHALL BE PLACED A MINIMUM OF 6" APART.

7 BELL & SPIGOT BONDING

Scale: N.T.S.
File:

NO.	DATE	REVISION	APP.

IDS Engineering Group
13430 NW. Freeway, Suite 700
Houston, Tx. 77040
713.462.3178
TxEng Firm 2726 | TxSurv Firm 10110700

SURVEYED BY: KUO & ASSOCIATES, INC.
TBPE FIRM #F-4578; TBPLS FIRM #1007560

THIS DOCUMENT IS RELEASED FOR THE PURPOSE OF REVIEW UNDER THE AUTHORITY OF MARCEL KHOUW, P.E. 101807 ON 05/27/2026. IT IS NOT TO BE USED FOR CONSTRUCTION PURPOSES.

CITY OF HOUSTON
HOUSTON PUBLIC WORKS

LIFT STATION RENEWAL AND REPLACEMENT FY 2023

MISCELLANEOUS DETAILS (SHEET 1 OF 2)

WBS NUMBER	FOR CITY OF HOUSTON USE ONLY
R–000267–0179–4	
DRAWING SCALE	
HORIZ: N.T.S. VERT: N/A	
CITY OF HOUSTON PM	
NAWARAJ PANTA, P.E.	
DWG. NO. C–01	SHEET NO. 310 OF 361

FILE PATH: \\idseg.com\FS\Projects\0000\005708500 CoH Lift Stations – FY 2023\CAD\DWG\PRODUCTION\310–MISC DTLS 1 OF 2.dwg

PLOTTED: 5/13/2026 6:49 PM

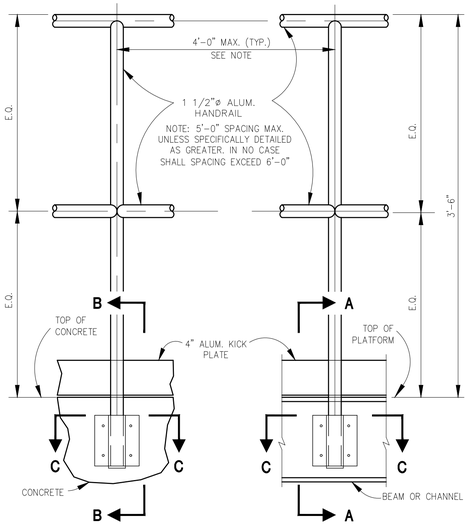

ELEVATION

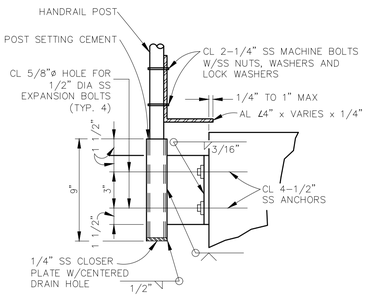

DETAIL SECTION 'A'

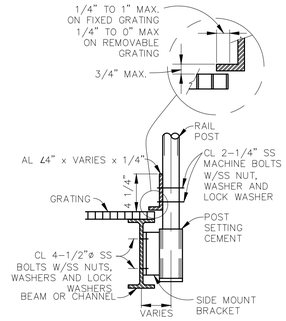

DETAIL SECTION 'B'

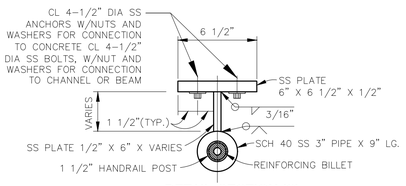

DETAIL SECTION 'C'

MISCELLANEOUS METALS NOTE:

1. WHERE ALUMINUM OR ALLOY SURFACES, FITTINGS OR EXTRUSIONS ARE TO BE IN CONTACT WITH DISSIMILAR METALS, GROUT, CONCRETE, MASONRY OR WOOD, COAT ALUMINUM AND/OR ALLOYS SURFACES PER SPECIFICATIONS DIVISION 9. IF DIVISION 9 IS NOT INCLUDED IN THE SPECIFICATIONS OR DOES NOT ADDRESS CORROSION PROTECTION, AFTER PREPARATION OF SURFACES, COAT WITH A HEAVY COAT, MINIMUM THICKNESS OF 10 MILS, OF BITUMINOUS PAINT, OR INSTALL AN APPROVED NON_ABSORPTIVE ISOLATION PAD TO PREVENT CONTACT.

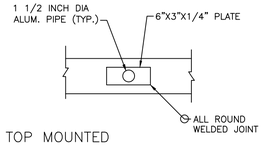

TOP MOUNTED
HANDRAIL ON STRINGER BEAM

NOTES:

1. HANDRAIL GRASPABILITY SHALL COMPLY WITH SECTION 1012.3 OF 2021 IBC.
2. WHERE HANDRAIL IS DISCONTINUOUS HANDRAIL SHALL EXTEND HORIZONTALLY 12" BEYOND THE TOP RISER, AND CONTINUE TO SLOPE FOR ONE TREAD BEYOND THE BOTTOM RISER.
3. HANDRAIL SHALL MAINTAIN A MINIMUM CLEARANCE OF 1-1/2" FROM AN ADJACENT WALL OR SURFACE AND BE FREE OF SHARP OR ABRASIVE ELEMENTS.
4. GUARD OPENINGS SHALL COMPLY WITH SECTION 1013.4 OF 2021 IBC.
5. ALL ALUMINUM SHALL BE POWDER COATED FOREST GREEN.

2 HANDRAIL DETAIL — Scale: N.T.S. — File:

NO.	DATE	REVISION	APP.

3 NOT USED — Scale: N.T.S. — File:

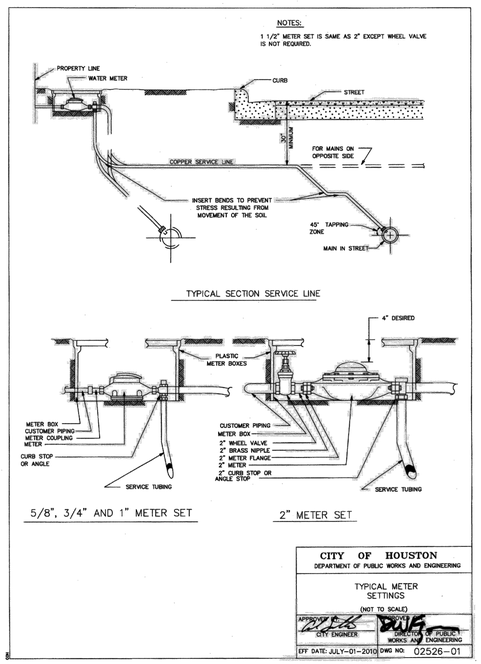

4 TYPICAL METER SETTINGS — Scale: N.T.S. — File:

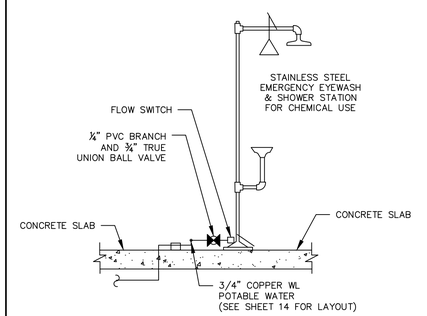

NOTES:

1. EYEWASH UNITS SHALL BE EYEWASH/SHOWER COMBINATION WITH INSULATION AND HEAT TRACING FOR FREEZE PROOF OPERATION. INDIVIDUAL OPERATION OF 10-INCH DELUXE SHOWER HEAD AND TWIN FACE SPRAY UNITS SHALL BE PROVIDED. PROVIDE TEMPERATURE ACTUATED BLEED VALVES. UNITS SHALL BE HAWS MODEL 8317 CTFP OR APPROVED EQUIVALENT.
2. MOUNT TO SLAB PER MANUFACTURER'S INSTRUCTIONS. USE 316 SS EPOXY ANCHORS.

5 EMERGENCY SHOWER AND EYEWASH DETAIL — Scale: N.T.S. — File:

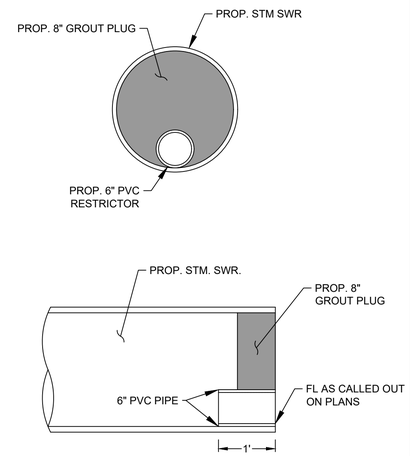

6 GROUT PLUG & RESTRICTOR DETAIL — Scale: N.T.S.

DWG. NO. C-02

IDS Engineering Group
13430 NW. Freeway, Suite 700
Houston, Tx. 77040
713.462.3178
TxEng Firm 2726 | TxSurv Firm 10110700

SURVEYED BY: KUO & ASSOCIATES, INC.
TBPE FIRM #F-4578; TBPLS FIRM #1007560

THIS DOCUMENT IS RELEASED FOR THE PURPOSE OF REVIEW UNDER THE AUTHORITY OF MARCEL KHOUW, P.E. 101807 ON 05/27/2026. IT IS NOT TO BE USED FOR CONSTRUCTION PURPOSES.

CITY OF HOUSTON
HOUSTON PUBLIC WORKS

LIFT STATION RENEWAL AND REPLACEMENT FY 2023

MISCELLANEOUS DETAILS (SHEET 2 OF 2)

WBS NUMBER	FOR CITY OF HOUSTON USE ONLY
R-000267-0179-4	
DRAWING SCALE	
HORIZ: N.T.S. VERT: N/A	
CITY OF HOUSTON PM	
NAWARAJ PANTA, P.E.	
SHEET NO. 311 OF 361	

FILE PATH: \\ideq.com\FS\Projects\0000\005708500 CoH Lift Stations - FY 2023\CAD\DWG\PRODUCTION\311-MISC DTLS 2 OF 2.dwg

PLOTTED: 5/13/2026 6:49 PM

FILE PATH: \\idseg.com\FS\Projects\0000\005708500 CoH Lift Stations - FY 2023\CAD\DWG\PRODUCTION\312-TYPICAL SAN SWR DETAILS.dwg

NO.	DATE	REVISION	APP.

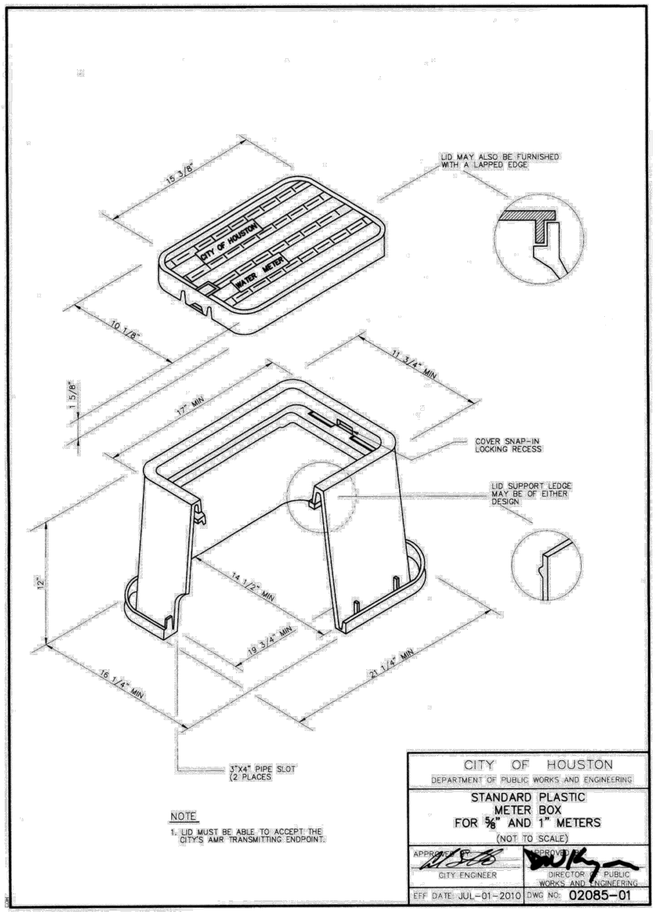

NOTE

1. LID MUST BE ABLE TO ACCEPT THE CITY'S AMR TRANSMITTING ENDPOINT.

CITY OF HOUSTON
DEPARTMENT OF PUBLIC WORKS AND ENGINEERING

STANDARD PLASTIC METER BOX FOR ⅝" AND 1" METERS

(NOT TO SCALE)

APPROVED BY: CITY ENGINEER	APPROVED BY: DIRECTOR OF PUBLIC WORKS AND ENGINEERING
EFF DATE: JUL-01-2010	DWG NO: 02085-01

TYPE 1
OPEN PICK HOLE

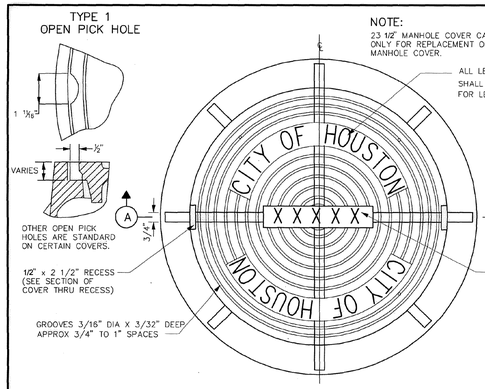

NOTE:
23 ½" MANHOLE COVER CAN BE USED ONLY FOR REPLACEMENT OF EXISTING MANHOLE COVER.

PLAN

23 1/2" MANHOLE COVER WITH FRAME

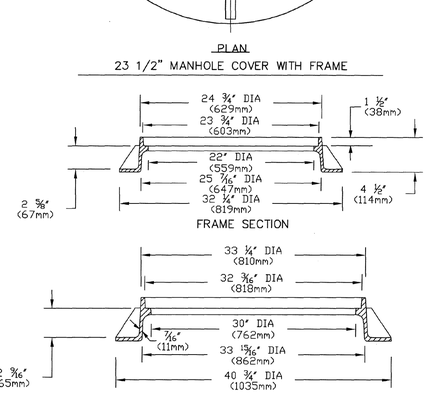

SECTION (A)

32" MANHOLE COVER WITH FRAME

1) NOTE: APPROXIMATE WEIGHTS.
FRAME- 170 LBS 77 kg
COVER- 270 LBS 123 kg
UNIT- 440 LBS 200 kg

2) MATERIAL- GRAY IRON ASTM A48 CL35B

3) CASTING TO MEET M306 PROOF LOAD SPECIFICATION

4) MODEL V-14240 ASY OR APPROVED EQUAL

CITY OF HOUSTON
DEPARTMENT OF PUBLIC WORKS AND ENGINEERING

SANITARY SEWER AND WATER MANHOLE FRAME AND COVER

(NOT TO SCALE)

APPROVED BY: CITY ENGINEER	APPROVED BY: DIRECTOR OF PUBLIC WORKS AND ENGINEERING
EFF DATE: JUL-01-2016	DWG NO: 02090-01

NOTES:

1. GROUTING OF MANHOLE STRUCTURE ANNULAR SPACE WILL BE PERMITTED IN CASES WHERE INSUFFICIENT WORK SPACE EXISTS FOR PLACEMENT AND COMPACTATION OF CEMENT STABILIZED SAND, PER COH STANDARD SPECIFICATION FOR TUNNEL GROUT.
2. THIS DETAIL ALSO APPLIES TO BACKFILL OF SHAFTS WITHOUT STRUCTURES.
3. ARRANGE PIPE JOINTS AS SHOWN WHEN USING RIGID CONNECTION TO CAST IN PLACE MANHOLE BASE.

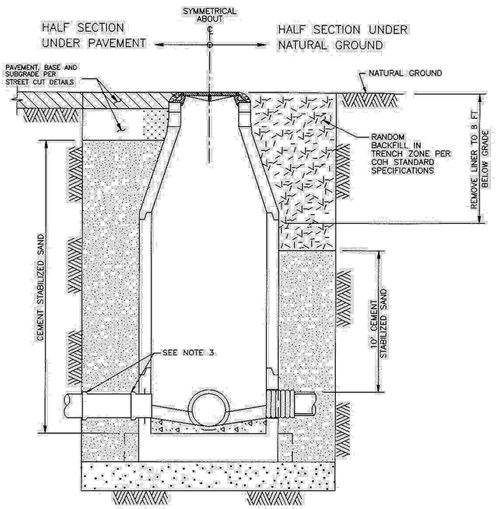

TYPICAL CROSS – SECTION

CITY OF HOUSTON
DEPARTMENT OF PUBLIC WORKS AND ENGINEERING
ENGINEERING, CONSTRUCTION AND REAL ESTATE DIVISION

SANITARY SEWER BACKFILL OF SHAFTS

(NOT TO SCALE)

APPROVED BY: CITY ENGINEER	APPROVED BY: DIRECTOR OF PUBLIC WORKS AND ENGINEERING
EFF DATE: OCT-01-2002	DWG NO: 02317-08

IDS Engineering Group
13430 NW. Freeway, Suite 700
Houston, Tx. 77040
713.462.3178
TxEng Firm 2726 | TxSurv Firm 10110700

SURVEYED BY: KUO & ASSOCIATES, INC.
TBPE FIRM #F-4578; TBPLS FIRM #1007560

THIS DOCUMENT IS RELEASED FOR THE PURPOSE OF REVIEW UNDER THE AUTHORITY OF MARCEL KHOUW, P.E. 101807 ON 05/27/2026. IT IS NOT TO BE USED FOR CONSTRUCTION PURPOSES.

CITY OF HOUSTON
HOUSTON PUBLIC WORKS

LIFT STATION RENEWAL AND REPLACEMENT FY 2023

TYPICAL SANITARY SEWER DETAILS (SHEET 1 OF 2)

WBS NUMBER	FOR CITY OF HOUSTON USE ONLY
R-000267-0179-4	
DRAWING SCALE	
HORIZ: N.T.S. VERT: N/A	
CITY OF HOUSTON PM	
NAWARAJ PANTA, P.E.	
DWG. NO. C-03	SHEET NO. 312 OF 361

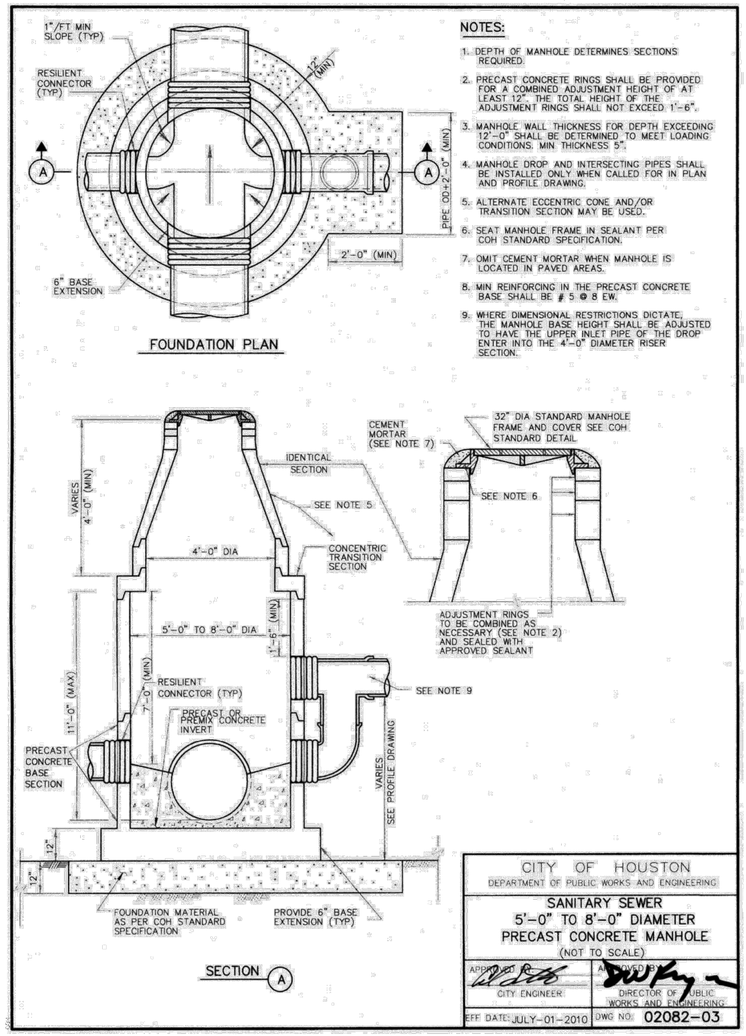

NO.	DATE	REVISION	APP.

IDS Engineering Group
13430 NW. Freeway, Suite 700
Houston, Tx. 77040
713.462.3178
TxEng Firm 2726 | TxSurv Firm 10110700

SURVEYED BY: KUO & ASSOCIATES, INC.
TBPE FIRM #F-4578; TBPLS FIRM #1007560

THIS DOCUMENT IS RELEASED FOR THE PURPOSE OF REVIEW UNDER THE AUTHORITY OF MARCEL KHOUW, P.E. 101807 ON 05/27/2026. IT IS NOT TO BE USED FOR CONSTRUCTION PURPOSES.

CITY OF HOUSTON
HOUSTON PUBLIC WORKS

LIFT STATION RENEWAL AND REPLACEMENT FY 2023

TYPICAL SANITARY SEWER DETAILS (SHEET 2 OF 2)

WBS NUMBER	FOR CITY OF HOUSTON USE ONLY
R-000267-0179-4	
DRAWING SCALE	
HORIZ: N.T.S. VERT: N/A	
CITY OF HOUSTON PM	
NAWARAJ PANTA, P.E.	

DWG. NO.	SHEET NO. 313 OF 361
C-04	

PLOTTED: 5/13/2026 6:49 PM
FILE PATH: \\idseg.com\FS\Projects\0000\005708500 CoH Lift Stations - FY 2023\CAD\DWG\PRODUCTION\313-TYPICAL SAN SWR DETAILS.dwg

DocuSign Envelope ID: 9B122261-CF05-457B-9A65-2650F40B66D5

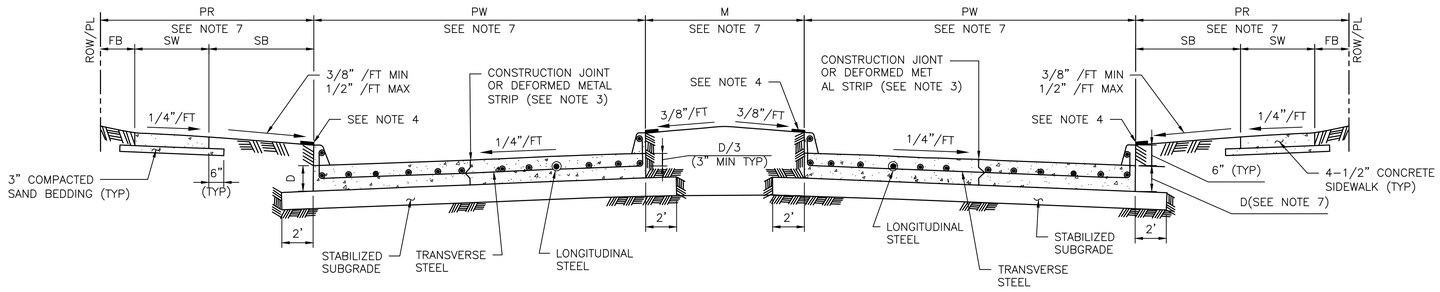

TYPICAL DOUBLE ROADWAY SECTION FOR CONCRETE PAVEMENT WITH CURBS

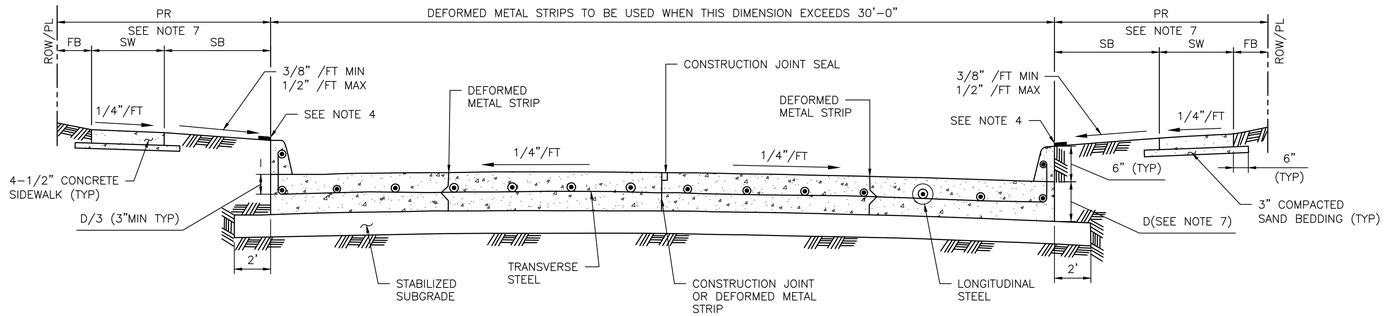

TYPICAL SINGLE ROADWAY SECTION FOR CONCRETE PAVEMENT WITH CURBS

TABLE 1

REINFORCING STEEL BAR SIZES AND SPACINGS FOR VARIOUS PAVEMENT THICKNESSES (D) WITH: MAXIMUM TRANSVERSE CONTROL JOINT SPACING = 20'–0"
MAXIMUM EXPANSION JOINT SPACING = 80'–0"
fc' = 4,000 PSI/28 DAYS AND FY = 60,000 PSI

PAVEMENT THICKNESS 'D' (IN)	PAVEMENT WIDTH 'PW' (FT)	LONGITUDINAL STEEL									TRAVERSE STEEL		
		#4 BARS			#5 BARS			#6 BARS			#4 BARS	#5 BARS	#6 BARS
		NUMBER OF BARS	SPACING (IN)	END BAR SPACING (IN)	NUMBER OF BARS	SPACING (IN)	END BAR SPACING (IN)	NUMBER OF BARS	SPACING (IN)	END BAR SPACING (IN)	SPACING (IN)	SPACING (IN)	SPACING (IN)
6	28	17	20.50	4.00	–	–	–	–	–	–	36	–	–
7	25	17	18.25	4.00	–	–	–	–	–	–	36	–	–
7	35	24	18.00	3.00	–	–	–	–	–	–	36	–	–
7	36	25	17.75	3.00	–	–	–	–	–	–	36	–	–
7	37	25	18.25	3.00	–	–	–	–	–	–	36	–	–
7	41	28	18.00	3.00	–	–	–	–	–	–	36	–	–
7	45	31	17.75	3.75	–	–	–	–	–	–	36	–	–
8	25	20	15.50	2.75	13	24.50	3.0	–	–	–	36	36	–
8	34	27	15.50	2.50	17	25.00	4.0	–	–	–	36	36	–
8	35	27	16.00	2.00	18	24.25	4.0	–	–	–	36	36	–
8	36	28	15.75	3.25	18	25.00	3.0	–	–	–	30	36	–
8	44	24	15.75	4.00	22	24.75	4.0	–	–	–	30	36	–
8	45	35	15.75	2.25	23	24.25	3.0	–	–	–	30	36	–
9	25	22	14.00	3.00	14	22.50	4.0	–	–	–	36	36	–
9	34	31	13.50	2.00	19	22.25	3.5	–	–	–	30	36	–
9	35	31	13.75	3.75	20	21.75	3.5	–	–	–	30	36	–
9	36	32	13.75	3.00	21	21.25	3.5	–	–	–	30	36	–
9	44	39	13.75	2.75	25	21.75	3.0	–	–	–	24	36	–
9	45	39	14.00	4.00	26	21.25	4.5	–	–	–	24	36	–
10	25	24	12.75	3.50	17	18.25	4.0	–	–	–	36	36	36
10	34	33	12.50	4.00	21	20.00	4.0	–	–	–	30	36	36
10	35	34	12.50	3.75	23	18.75	4.0	–	–	–	30	36	36
10	36	35	12.50	3.50	24	18.50	3.0	–	–	–	30	36	36
10	44	44	12.00	4.00	29	18.50	4.5	–	–	–	24	36	36
10	45	44	12.50	3.00	29	19.00	3.0	–	–	–	24	36	36
11	25	27	11.25	3.00	17	18.25	4.0	12	26.75	3	36	36	36
11	34	36	11.50	2.75	24	17.50	2.5	17	25.00	4	24	36	36
11	35	37	11.50	3.00	24	18.00	3.0	17	25.75	4	24	36	36
11	36	40	11.00	2.00	25	17.75	3.0	17	26.50	4	24	36	36
11	44	48	11.125	2.50	30	18.00	3.0	21	26.00	4	24	36	36
11	45	49	11.125	3.00	31	17.75	4.0	22	25.50	3	24	36	36
12	25	–	–	–	19	16.25	4.0	13	24.50	3	36	36	36
12	34	–	–	–	26	16.00	4.0	18	23.50	4	24	36	36
12	35	–	–	–	26	16.50	4.0	19	23.00	3	24	36	36
12	36	–	–	–	27	16.25	4.5	20	22.25	4.5	24	36	36
12	44	–	–	–	33	16.25	4.0	24	22.50	5	24	30	36
12	45	–	–	–	35	15.75	3.0	25	22.25	3	24	30	36

MINIMUM LAP LENGTH (L):
A. # 4 BARS ; L = 22 INCHES
B. # 5 BARS ; L = 27 INCHES
C. # 6 BARS ; L = 32 INCHES

NOTES:

1. THE MAXIMUM WIDTH BETWEEN LONGITUDINAL JOINTS SHALL NOT EXCEED 15'–0".
2. ALL EARTHEN AREAS ARE TO BE HYDROMULCHED UNLESS SHOWN OTHERWISE ON DRAWINGS.
3. CONTRACTOR MAY SAW CUT IN LIEU OF DEFORMED METAL STRIP.
4. USE STRIP OF SOD GRASS TO PREVENT EROSION UNTIL STAND OF GRASS IS ESTABLISHED.
5. AN EQUAL OR LARGER AREA OF WELDED REINFORCEMENT BAR CONFORMING TO ASTM A497, MAY BE SUBSTITUTED FOR REBARS LISTED IN TABLE 1.
6. IF AVAILABLE ROW IS NOT SUFFICIENT TO ACCOMMODATE SIDEWALK WIDTH (SW) ACCORDING TO IDM REQUIREMENTS, ENGINEER SHALL OBTAIN A VARIANCE FROM THE CITY ENGINEER.
7. REFER TO CONTRACT DRAWINGS FOR PAVEMENT WIDTH (PW) AND PAVEMENT THICKNESS (D), MEDIAN (M), PEDESTRIAN REALM (PR), SIDEWALK (SW), FRONTAGE BUFFER (FB), AND SAFETY BUFFER (SB) WIDTHS.

APPROVED BY:	APPROVED BY:
DocuSigned by: Sukat kanwar 9EF8B0C641F5478...	DocuSigned by: HANG NGUYEN 95A29EFDA7584CD...
CITY ENGINEER	CITY TRAFFIC ENGINEER
APPROVED BY: DocuSigned by: Carol Haddock A93C4105072B3453...	
DIRECTOR OF HOUSTON PUBLIC WORKS	
EFF DATE: NOV–27–2023	DWG NO: 02751–01

IDS Engineering Group
13430 NW. Freeway, Suite 700
Houston, Tx. 77040
713.462.3178
TxEng Firm 2726 | TxSurv Firm 10110700

SURVEYED BY: KUO & ASSOCIATES, INC.
TBPE FIRM #F–4579; TBPLS FIRM #1007560

CITY OF HOUSTON
HOUSTON PUBLIC WORKS STANDARD

LIFT STATION RENEWAL AND REPLACEMENT FY 2023

CONCRETE PAVEMENT DETAILS

WBS NUMBER	FOR CITY OF HOUSTON USE ONLY
R–000267–0179–3	
DRAWING SCALE	
NOT TO SCALE	
CITY OF HOUSTON PM	
NAWARAJ PANTA, P.E.	
DWG. NO. C–05	SHEET NO. 314 OF 361

DISCLAIMER:
THE USE OF THIS STANDARD IS GOVERNED BY THE TEXAS ENGINEERING PRACTICE ACT. THE DESIGN REQUIREMENTS ON THIS STANDARD DO NOT PURPORT TO ADDRESS ALL OF THE SAFETY CONCERNS ASSOCIATED WITH THEIR USE. THE ENGINEER OF RECORD (EOR) IS TO REVIEW THESE DESIGN REQUIREMENTS AND BY AUTHORIZING THEIR USE; ACCEPTS RESPONSIBILITY FOR THEIR APPLICABILITY, ADEQUACY AND SAFETY. NO WARRANTY OF ANY KIND IS MADE BY THE CITY OF HOUSTON FOR ANY PURPOSES WHATSOEVER. THE CITY OF HOUSTON ASSUMES NO RESPONSIBILITY FOR INCORRECT RESULTS OR DAMAGES RESULTING FROM ITS USE.
FILE PATH: \\idseg.com\FS\Projects\0000\005708500 CoH Lift Stations – FY 2023\CAD\DWG\PRODUCTION\314–CONC PVMT DTLS.dwg

DocuSign Envelope ID: 9B122261-CF05-457B-9A65-2650F40B66D5

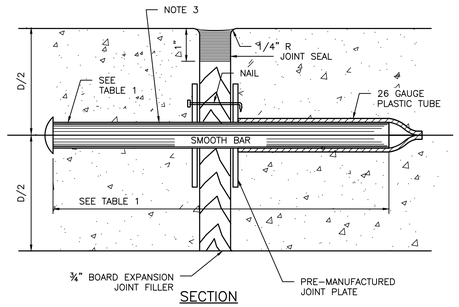

SECTION

DOWEL TYPE EXPANSION JOINT

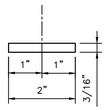

PLAN VIEW

JOINT PLATE

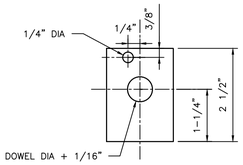

ELEVATION VIEW

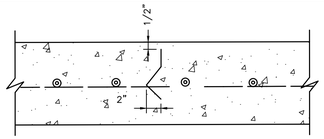

SECTION

DEFORMED METAL STRIP

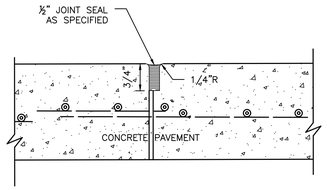

SECTION

CONSTRUCTION JOINT SEAL

TABLE 1

PAVEMENT THICKNESS (IN)	DOWEL SIZES AND SPACINGS		
	DIAMETER (IN)	LENGTH (IN)	SPACING (IN)
6	3/4	18	12
7	1	18	12
8	1	18	12
9	1 1/4	18	12
10	1 1/4	18	12
11	1 1/4	18	12
12	1 1/4	18	12

NOTES:

1. STEEL TO MEET ASTM STANDARD SPECIFICATIONS FOR CONCRETE REI BARS. UNITS TO BE SPACED 12" C CENTER.
2. EXPANSION JOINT TO BE PLACED A OF EACH CURB RADIUS.
3. CENTER DOWEL HORIZONTALLY ON
4. CENTER DOWEL VERTICALLY IN CON BASE. EXTEND THICKENED CONCRET NEEDED TO MAINTAIN 3" MIN COVE
5. CITY OF HOUSTON APPROVED PROD BE USED AS JOINT PLATE ALTERNA

CITY OF HOUSTON
HOUSTON PUBLIC WORKS STANDARD

PAVEMENT EXPANSION AND CONSTRUCTION JOINT DETAILS

(SCALE: NOT TO SCALE)

DocuSigned by: Sukait Kahwar — CITY ENGINEER
DocuSigned by: Khang Nguyen — CITY TRAFFIC ENGINEER
DocuSigned by: Carl Haddock — DIRECTOR OF HPW

EFF DATE: NOV-27-2023 | DWG NO: 02752-01

DISCLAIMER:
THE USE OF THIS STANDARD IS GOVERNED BY THE TEXAS ENGINEERING PRACTICE ACT. THE DESIGN REQUIREMENTS ON THIS STANDARD DO NOT PURPORT TO ADDRESS ALL OF THE SAFETY CONCERNS ASSOCIATED WITH ITS USE. ANY ENGINEER WHO ADOPTS THIS STANDARD IS RESPONSIBLE FOR THE DESIGN IT PREPARES USING THIS STANDARD AND MUST EXERCISE THE PROFESSIONAL JUDGMENT REQUIRED OF A DESIGN PROFESSIONAL IN ADAPTING THE STANDARD TO THE CONDITIONS ENCOUNTERED AT THE SITE. THE CITY OF HOUSTON (COH), IN ADOPTING THIS STANDARD, IS NOT ASSUMING ANY RESPONSIBILITY FOR ENGINEERING DESIGNS, CONSTRUCTION OR OTHER ACTIVITIES UNDERTAKEN BY OTHERS USING THE STANDARD AND IS NOT LIABLE FOR INCIDENTAL OR CONSEQUENTIAL DAMAGES AROUSED BY THE USE OF THIS STANDARD. COH DOES NOT REPRESENT OR GUARANTEE THAT USE OF THIS STANDARD WILL NOT INFRINGE UPON ANY THIRD PARTY PATENT OR RIGHTS. ANY PERSON WHO USES THIS STANDARD AGREES TO RELEASE COH FROM ANY AND ALL CLAIMS ARISING FROM ITS USE. COH EXPRESSLY DISCLAIMS ANY WARRANTY AS TO THE ACCURACY OR SUITABILITY OF THIS STANDARD FOR ANY PURPOSE. BY USING THIS STANDARD, THE USER ACCEPTS RESPONSIBILITY FOR ITS APPLICABILITY, ADEQUACY AND SAFETY. NO WARRANTY OF ANY KIND IS MADE BY THE CITY OF HOUSTON FOR ANY PURPOSE WHATSOEVER. THE CITY OF HOUSTON ASSUMES NO RESPONSIBILITY FOR INCORRECT RESULTS OR DAMAGES RESULTING FROM ITS USE.

FILE PATH: \\idseg.com\FS\Projects\0000\005708500 CoH Lift Stations - FY 2023\CAD\DWG\PRODUCTION\315-CONSTR JOINT DTLS.dwg

NO.	DATE	REVISION	APP.

DocuSign Envelope ID: 9B122261-CF05-457B-9A65-2650F40B66D5

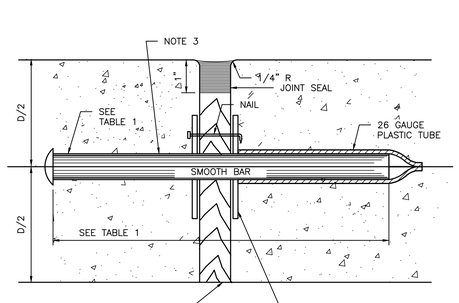

SECTION

DOWEL TYPE EXPANSION JOINT

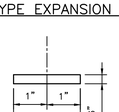

PLAN VIEW

JOINT PLATE

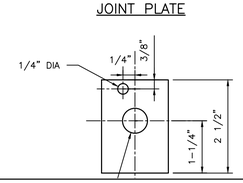

ELEVATION VIEW

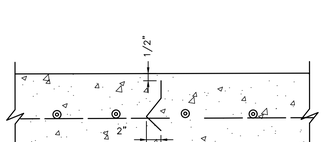

SECTION

DEFORMED METAL STRIP

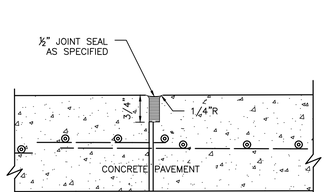

SECTION

CONSTRUCTION JOINT SEAL

TABLE 1

PAVEMENT THICKNESS (IN)	DOWEL SIZES AND SPACINGS		
	DIAMETER (IN)	LENGTH (IN)	SPACING (IN)
6	3/4	18	12
7	1	18	12
8	1	18	12
9	1 1/4	18	12
10	1 1/4	18	12
11	1 1/4	18	12
12	1 1/4	18	12

NOTES:

1. STEEL TO MEET ASTM STANDARD SPECIFICATIONS FOR CONCRETE REI BARS. UNITS TO BE SPACED 12" C CENTER.
2. EXPANSION JOINT TO BE PLACED A OF EACH CURB RADIUS.
3. CENTER DOWEL HORIZONTALLY ON
4. CENTER DOWEL VERTICALLY IN CON BASE. EXTEND THICKENED CONCRET NEEDED TO MAINTAIN 3" MIN COVE
5. CITY OF HOUSTON APPROVED PROD BE USED AS JOINT PLATE ALTERNA

CITY OF HOUSTON
HOUSTON PUBLIC WORKS STANDARD

SIDEWALK EXPANSION AND CONSTRUCTION JOINT DETAILS

(SCALE: NOT TO SCALE)

DocuSigned by: Sukait Kahwar — CITY ENGINEER
DocuSigned by: Khang Nguyen — CITY TRAFFIC ENGINEER
DocuSigned by: Carl Haddock — DIRECTOR OF HPW

EFF DATE: NOV-27-2023 | DWG NO: 02752-02

DISCLAIMER:
THE USE OF THIS STANDARD IS GOVERNED BY THE TEXAS ENGINEERING PRACTICE ACT. THE DESIGN REQUIREMENTS ON THIS STANDARD DO NOT PURPORT TO ADDRESS ALL OF THE SAFETY CONCERNS ASSOCIATED WITH ITS USE. ANY ENGINEER WHO ADOPTS THIS STANDARD IS RESPONSIBLE FOR THE DESIGN IT PREPARES USING THIS STANDARD AND MUST EXERCISE THE PROFESSIONAL JUDGMENT REQUIRED OF A DESIGN PROFESSIONAL IN ADAPTING THE STANDARD TO THE CONDITIONS ENCOUNTERED AT THE SITE. THE CITY OF HOUSTON (COH), IN ADOPTING THIS STANDARD, IS NOT ASSUMING ANY RESPONSIBILITY FOR ENGINEERING DESIGNS, CONSTRUCTION OR OTHER ACTIVITIES UNDERTAKEN BY OTHERS USING THE STANDARD AND IS NOT LIABLE FOR INCIDENTAL OR CONSEQUENTIAL DAMAGES AROUSED BY THE USE OF THIS STANDARD. COH DOES NOT REPRESENT OR GUARANTEE THAT USE OF THIS STANDARD WILL NOT INFRINGE UPON ANY THIRD PARTY PATENT OR RIGHTS. ANY PERSON WHO USES THIS STANDARD AGREES TO RELEASE COH FROM ANY AND ALL CLAIMS ARISING FROM ITS USE. COH EXPRESSLY DISCLAIMS ANY WARRANTY AS TO THE ACCURACY OR SUITABILITY OF THIS STANDARD FOR ANY PURPOSE WHATSOEVER. THE CITY OF HOUSTON ASSUMES NO RESPONSIBILITY FOR INCORRECT RESULTS OR DAMAGES RESULTING FROM ITS USE.

FILE PATH: \\idseg.com\FS\Projects\0000\005708500 CoH Lift Stations - FY 2023\CAD\DWG\PRODUCTION\315-CONSTR JOINT DTLS.dwg

IDS Engineering Group
13430 NW. Freeway, Suite 700
Houston, Tx. 77040
713.462.3178
TxEng Firm 2726 | TxSurv Firm 10110700

SURVEYED BY: KUO & ASSOCIATES, INC.
TBPE FIRM #F-4578; TBPLS FIRM #1007560

THIS DOCUMENT IS RELEASED FOR THE PURPOSE OF REVIEW UNDER THE AUTHORITY OF MARCEL KHOUW, P.E. 101807 ON 05/27/2026. IT IS NOT TO BE USED FOR CONSTRUCTION PURPOSES.

CITY OF HOUSTON
HOUSTON PUBLIC WORKS

LIFT STATION RENEWAL AND REPLACEMENT FY 2023

CONSTRUCTION JOINT DETAILS

WBS NUMBER	FOR CITY OF HOUSTON USE ONLY
R-000267-0179-4	
DRAWING SCALE	
HORIZ: N.T.S. VERT: N/A	
CITY OF HOUSTON PM	
NAWARAJ PANTA, P.E.	

DWG. NO.	SHEET NO.
C-06	315 OF 361

PLOTTED: 5/13/2026 6:50 PM
FILE PATH: \\idseg.com\FS\Projects\0000\005708500 CoH Lift Stations - FY 2023\CAD\DWG\PRODUCTION\315-CONSTR JOINT DTLS.dwg

DocuSign Envelope ID: 9B122261-CF05-457B-9A65-2650F40B66D5

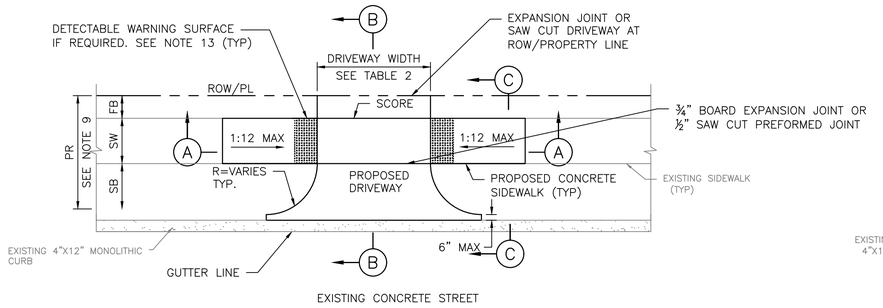

PLAN VIEW
DRIVEWAY

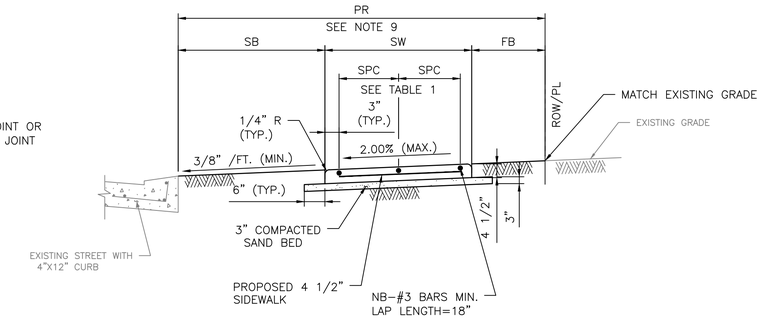

SECTION C–C
TYPICAL SIDEWALK SECTION

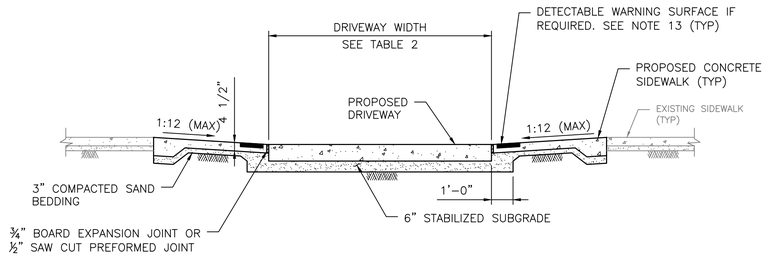

SECTION A–A
PROPOSED SIDEWALK, THROUGH DRIVEWAY WITH EXCESSIVE GRADES

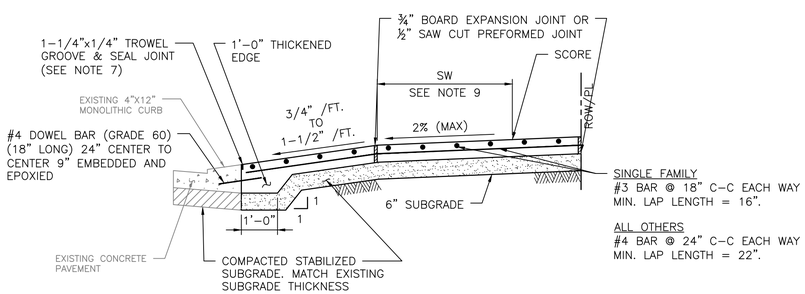

SECTION B–B
TYPICAL DRIVEWAY SECTION

TABLE 1

REINFORCING STEEL INFORMATION
FOR 4 ½ " THICK SIDEWALKS
EXPANSION JOINT SPACING = 40 FT
fc' = 3,500 PSI AND fy = 60,000 PSI
REFER TO CONTRACT DRAWINGS FOR SIDEWALKS WIDER THAN 6 FEET.

SIDEWALK THICKNESS (IN)	SIDEWALK WIDTH (FT)	LONGITUDINAL STEEL			TRANSVERSE STEEL #3 BARS SPACING (IN)
		#3 BARS			
		NO. OF BARS "NB"	SPACING "SPC" (IN)	END BAR SPACING (IN)	
4.5	5	3	27	3	48
4.5	6	4	22	3	48

TABLE 2

DRIVEWAY DESIGN CRITERIA (1)(2)

TRAFFIC TYPE	TYPE A DRIVEWAY (FOR SINGLE FAMILY RESIDENTIAL HOUSES OR DUPLEXES)				TYPE B DRIVEWAY (SHARED ACCESS/SHARED DRIVEWAY)				TYPE C DRIVEWAY (COMMERCIAL DRIVEWAY)			
	WIDTH (FT)		RADIUS (FT)		WIDTH (FT)		RADIUS (FT)		WIDTH (FT)		RADIUS (FT)	
	MIN	MAX	MIN	MAX	MIN	MAX	MIN	MAX	MIN	MAX	MIN	MAX
ONE-WAY	10	12	4	10	12(5)	16(5)	4(5)	10(5)	15	20	10	20
TWO-WAY	10(3)	24(4)	4	10	16(6)	24	4	10	24	35	10	20

(1) REFER TO INFRASTRUCTURE DESIGN MANUAL ARTCLE 15.2.07.C.1.F FOR DRIVEWAYS THAT REQUIRE A VEHICLE SWEPT PATH ANALYSIS.
(2) REFER TO INFRASTRUCTURE DESIGN MANUAL ARTCILES 15.2.07.C.1.G.(1) AND 15.2.07.C.1.G.(2) FOR TYPE 1 PAE AND TYPE 2 PAE REQUIREMENTS.
(3) THE MINIMUM WIDTH FOR JOINT ACCESS DRIVEWAY IS 12 FT.
(4) REFER TO CHAPTER 42 OF THE CODE OF ORDINANCES FOR DRIVEWAY WIDTHS FOR NARROW LOTS.
(5) ONLY MURS AND COURTYARD STYLE DEVELOPMENTS ON CORNER LOTS CAN HAVE ONE-WAY DRIVEWAYS.
(6) REFER TO CHAPTER 42, SECTION 42-146 OF THE CODE OF ORDINANCES FOR EXCEPTIONS TO THE MINIMUM DRIVEWAY WIDTH FOR SHARED DRIVEWAYS.

NOTES:

1. REPAIR, RECONSTRUCTION OR REPLACEMENT OF SIDEWALKS SHALL MEET PERMITTING REQUIREMENTS OF CODE OF ORDINANCES SECTION 40–552.
2. FOR REPAIR, RECONSTRUCTION, OR REPLACEMENT OF EXISTING SIDEWALKS:
   - 2.1. EXISTING SIDEWALKS LESS THAN OR EQUAL TO 20 FEET IN TOTAL LENGTH:
     - 2.1.1. THE PROPOSED SIDEWALK WIDTH WILL BE ALLOWED TO MATCH THE EXISTING SIDEWALK.
   - 2.2. EXISTING SIDEWALKS GREATER THAN 20 FEET IN TOTAL LENGTH:
     - 2.2.1. THE SIDEWALK WIDTH FOR THE ENTIRE PROPERTY WIDTH SHALL BE IMPROVED TO MEET WIDTH REQUIREMENTS ACCORDING TO THE LATEST INFRASTRUCTURE DESIGN MANUAL.
   - 2.3. 20 FOOT TOTAL LENGTH IS DEFINED AS:
     - 2.3.1. UP TO 10 FEET ON BOTH SIDES OF THE DRIVEWAY; OR
     - 2.3.2. UP TO 20 FEET WHEN SIDEWALK AFFECTED IS LOCATED ONLY ON ONE SIDE OF THE DRIVEWAY.
3. IF AVAILABLE ROW IS NOT SUFFICIENT TO ACCOMMODATE SIDEWALK WIDTH (SW) ACCORDING TO IDM REQUIREMENTS, ENGINEER SHALL OBTAIN A VARIANCE FROM THE CITY ENGINEER.
4. DRIVEWAYS SHALL BE 6" THICK FOR SINGLE FAMILY OR DUPLEXES.
5. DRIVEWAYS AND SIDEWALKS SHALL BE CONSTRUCTED WITH PORTLAND CEMENT CONCRETE AND INCLUDE 5 1/2 SACKS OF CEMENT PER CUBIC YARD OF CONCRETE.
6. THE OUTER DOWEL BARS ARE TO BE LOCATED 12" FROM END OF PROPOSED EDGE OF DRIVEWAY RETURN. EXTEND DOWEL 3" INCHES INTO PROPOSED DRIVEWAY AND BEND REMAINING BAR TO EXTEND TO RADIUS RETURN BOTH SIDES.
7. TROWEL GROOVE SEALANT SHALL BE LOW MODULUS SILICONE OR POLYURETHANE SEALANT.
8. ALL JOINTS ALONG THE SIDEWALK SHALL BE CONSTRUCTED ACCORDING TO DRAWING 02752–02 AND SPECIFICATION 02752.
9. REFER TO CONTRACT DRAWINGS FOR PEDESTRIAN REALM (PR), SIDEWALK (SW), FRONTAGE BUFFER (FB), AND SAFETY BUFFER (SB) WIDTHS.
10. CEMENT STABILIZED SAND 1.5 SACKS OF CEMENT PER TON OF DRY SAND.
11. ALL RAMPS AND SIDEWALKS/WALKWAYS SHALL BE CONSTRUCTED IN ACCORDANCE WITH HOUSTON PUBLIC WORKS STANDARDS, TEXAS ACCESSIBILITY STANDARDS (TAS) AND AMERICANS WITH DISABILITIES ACT (ADA) REQUIREMENTS. IF THERE IS A CONFLICT IN THE REQUIREMENTS, THE STRICTEST REQUIREMENTS SHALL GOVERN.
12. CURB RAMPS THAT ARE STEEPER THAN A 1:12 MAX SLOPE WILL NOT BE ACCEPTED BY THE CITY OF HOUSTON.
13. DETECTABLE WARNING SURFACES:
    - 13.1. SIDEWALK SHALL HAVE A DETECTABLE WARNING SURFACE WHERE:
      - 13.1.1. SIDEWALK INTERSECTS TYPE C DRIVEWAYS (COMMERCIAL DRIVEWAYS) THAT ARE STOP, YIELD OR TRAFFIC SIGNAL CONTROLLED; OR
      - 13.1.2. SIDEWALK SLOPE IS GREATER THAN 1:20 AND INTERSECTS A TYPE C DRIVEWAY (COMMERCIAL DRIVEWAY)
    - 13.2. DETECTABLE WARNING SURFACES ARE OPTIONAL WHERE SIDEWALKS INTERSECT TYPE A DRIVEWAYS (SINGLE FAMILY RESIDENTIAL HOUSES OR DUPLEXES) OR TYPE B DRIVEWAYS (SHARED ACCESS/SHARED DRIVEWAYS).
    - 13.3. REFER TO STANDARD DETAILS 02775–06 TO 02775–07 FOR DETECTABLE WARNING SURFACE STANDARDS.

APPROVED BY:	APPROVED BY:
DocuSigned by: Sukad kanwar 9EFB80C641F5478...	DocuSigned by: tHANG NGUYEN 95A29EFDA758ACD...
CITY ENGINEER	CITY TRAFFIC ENGINEER
APPROVED BY: DocuSigned by: Curtis Haddock A93C4105072B3453...	
DIRECTOR OF HOUSTON PUBLIC WORKS	
EFF DATE: NOV–27–2023	DWG NO: 02754–01A

IDS Engineering Group
13430 NW. Freeway, Suite 700
Houston, Tx. 77040
713.462.3178
TxEng Firm 2726 | TxSurv Firm 10110700

SURVEYED BY: KUO & ASSOCIATES, INC.
TBPE FIRM #F–4579; TBPLS FIRM #1007560

CITY OF HOUSTON
HOUSTON PUBLIC WORKS STANDARD

LIFT STATION RENEWAL AND REPLACEMENT FY 2023

DRIVEWAY DETAIL WITH 4"x12" CURB FOR LOCAL RESIDENTIAL STREETS

WBS NUMBER	FOR CITY OF HOUSTON USE ONLY
R–000267–0179–3	
DRAWING SCALE	
NOT TO SCALE	
CITY OF HOUSTON PM	
NAWARAJ PANTA, P.E.	
SHEET NO. 316 OF 361	

DWG. NO. C–07

DISCLAIMER:
THE USE OF THIS STANDARD IS GOVERNED BY THE TEXAS ENGINEERING PRACTICE ACT. THE DESIGN REQUIREMENTS ON THIS STANDARD DO NOT PURPORT TO ADDRESS ALL OF THE SAFETY CONCERNS ASSOCIATED WITH THEIR USE. THE ENGINEER OF RECORD (EOR) IS TO REVIEW THESE DESIGN REQUIREMENTS AND BY AUTHORIZING THEIR USE; ACCEPTS RESPONSIBILITY FOR THEIR APPLICABILITY, ADEQUACY AND SAFETY. NO WARRANTY OF ANY KIND IS MADE BY THE CITY OF HOUSTON FOR ANY PURPOSES WHATSOEVER. THE CITY OF HOUSTON ASSUMES NO RESPONSIBILITY FOR INCORRECT RESULTS OR DAMAGES RESULTING FROM ITS USE.
FILE PATH: \\idseg.com\FS\Projects\0000\005708500 CoH Lift Stations – FY 2023\CAD\DWG\PRODUCTION\316–DRIVEWAY DETAILS.dwg

DocuSign Envelope ID: 9B122261-CF05-457B-9A65-2650F40B66D5

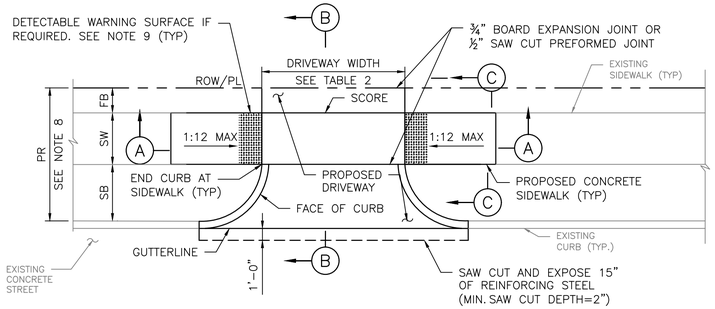

PLAN VIEW
DRIVEWAY

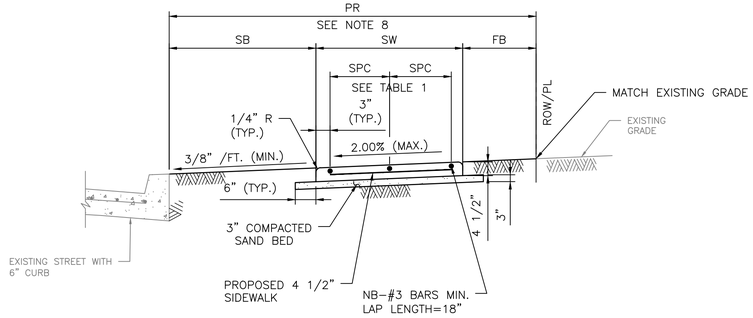

SECTION C–C
TYPICAL SIDEWALK SECTION

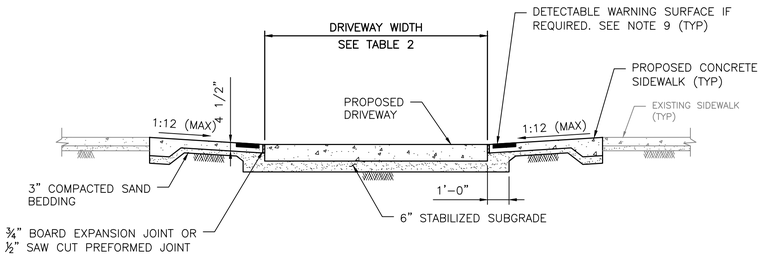

SECTION A–A
PROPOSED SIDEWALK THROUGH DRIVEWAY
WITH EXCESSIVE ELEVATION DIFFERENCE
WITH EXISTING SIDEWALK

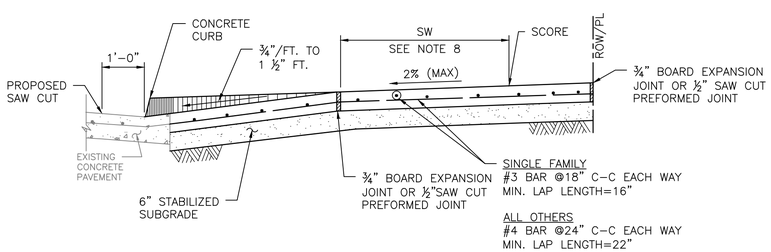

SECTION B–B
TYPICAL DRIVEWAY SECTION

NOTES:

1. REPAIR, RECONSTRUCTION OR REPLACEMENT OF SIDEWALKS SHALL MEET PERMITTING REQUIREMENTS OF CODE OF ORDINANCES SECTION 40–552.
2. FOR REPAIR, RECONSTRUCTION, OR REPLACEMENT OF EXISTING SIDEWALKS:
   - 2.1. EXISTING SIDEWALKS LESS THAN OR EQUAL TO 20 FEET IN TOTAL LENGTH:
     - 2.1.1. THE PROPOSED SIDEWALK WIDTH WILL BE ALLOWED TO MATCH THE EXISTING SIDEWALK.
   - 2.2. EXISTING SIDEWALKS GREATER THAN 20 FEET IN TOTAL LENGTH:
     - 2.2.1. THE SIDEWALK WIDTH FOR THE ENTIRE PROPERTY WIDTH SHALL BE IMPROVED TO MEET WIDTH REQUIREMENTS ACCORDING TO THE LATEST INFRASTRUCTURE DESIGN MANUAL.
   - 2.3. 20 FOOT TOTAL LENGTH IS DEFINED AS:
     - 2.3.1. UP TO 10 FEET ON BOTH SIDES OF THE DRIVEWAY; OR
     - 2.3.2. UP TO 20 FEET WHEN SIDEWALK AFFECTED IS LOCATED ONLY ON ONE SIDE OF THE DRIVEWAY.
3. ALL JOINTS ALONG THE SIDEWALK SHALL BE CONSTRUCTED ACCORDING TO DRAWING 02752–02 AND SPECIFICATION 02752.
4. DRIVEWAYS SHALL BE MINIMUM 6" THICK FOR SINGLE FAMILY AND DUPLEXES. DRIVEWAYS SHALL BE MINIMUM 7" THICK FOR ALL OTHERS (I.E. COMMERCIAL, INDUSTRIAL, ETC.)
5. DRIVEWAYS AND SIDEWALKS SHALL BE CONSTRUCTED WITH PORTLAND CEMENT CONCRETE AND INCLUDE 5 1/2 SACKS OF CEMENT PER CUBIC YARD OF CONCRETE.
6. ALL RAMPS AND SIDEWALKS/WALKWAYS SHALL BE CONSTRUCTED IN ACCORDANCE WITH HOUSTON PUBLIC WORKS STANDARDS, TEXAS ACCESSIBILITY STANDARDS (TAS) AND AMERICANS WITH DISABILITIES ACT (ADA) REQUIREMENTS. IF THERE IS A CONFLICT IN THE REQUIREMENTS, THE STRICTEST REQUIREMENTS SHALL GOVERN.
7. CURB RAMPS THAT ARE STEEPER THAN A 1:12 MAX SLOPE WILL NOT BE ACCEPTED BY THE CITY OF HOUSTON.
8. REFER TO CONTRACT DRAWINGS FOR PEDESTRIAN REALM (PR), SIDEWALK (SW), FRONTAGE BUFFER (FB), AND SAFETY BUFFER (SB) WIDTHS.
9. DETECTABLE WARNING SURFACES:
   - 9.1. SIDEWALK SHALL HAVE A DETECTABLE WARNING SURFACE WHERE:
     - 9.1.1. SIDEWALK INTERSECTS TYPE C DRIVEWAYS (COMMERCIAL DRIVEWAYS) THAT ARE STOP, YIELD, OR TRAFFIC SIGNAL CONTROLLED; OR
     - 9.1.2. SIDEWALK SLOPE IS GREATER THAN 1:20 AND INTERSECTS A TYPE C DRIVEWAY (COMMERCIAL DRIVEWAY)
   - 9.2. DETECTABLE WARNING SURFACES ARE OPTIONAL WHERE SIDEWALKS INTERSECT TYPE A DRIVEWAYS (SINGLE FAMILY RESIDENTIAL HOUSES OR DUPLEXES) OR TYPE B DRIVEWAYS (SHARED ACCESS/SHARED DRIVEWAYS).
   - 9.3. REFER TO STANDARD DETAILS 02775–06 TO 02775–07 FOR DETECTABLE WARNING SURFACE STANDARDS.

TABLE 1

REINFORCING STEEL INFORMATION
FOR 4 ½ " THICK SIDEWALKS
EXPANSION JOINT SPACING = 40 FT
fc' = 3,500 PSI AND fy = 60,000 PSI
REFER TO CONTRACT DRAWINGS FOR SIDEWALKS WIDER THAN 6 FEET.

SIDEWALK THICKNESS (IN)	SIDEWALK WIDTH (FT)	LONGITUDINAL STEEL			TRANSVERSE STEEL #3 BARS SPACING (IN)
		#3 BARS			
		NO. OF BARS "NB"	SPACING "SPC" (IN)	END BAR SPACING (IN)	
4.5	5	3	27	3	48
4.5	6	4	22	3	48

TABLE 2

DRIVEWAY DESIGN CRITERIA (1)(2)

TRAFFIC TYPE	TYPE A DRIVEWAY (FOR SINGLE FAMILY RESIDENTIAL HOUSES OR DUPLEXES)				TYPE B DRIVEWAY (SHARED ACCESS/SHARED DRIVEWAY)				TYPE C DRIVEWAY (COMMERCIAL DRIVEWAY)			
	WIDTH (FT)		RADIUS (FT)		WIDTH (FT)		RADIUS (FT)		WIDTH (FT)		RADIUS (FT)	
	MIN	MAX	MIN	MAX	MIN	MAX	MIN	MAX	MIN	MAX	MIN	MAX
ONE–WAY	10	12	4	10	12(5)	16(5)	4(5)	10(5)	15	20	10	20
TWO–WAY	10(3)	24(4)	4	10	16(6)	24	4	10	24	35	10	20

(1) REFER TO INFRASTRUCTURE DESIGN MANUAL ARTICLE 15.2.07.C.1.F FOR DRIVEWAYS THAT REQUIRE A VEHICLE SWEPT PATH ANALYSIS.
(2) REFER TO INFRASTRUCTURE DESIGN MANUAL ARTCILES 15.2.07.C.1.G.(1) AND 15.2.07.C.1.G.(2) FOR TYPE 1 PAE AND TYPE 2 PAE REQUIREMENTS.
(3) THE MINIMUM WIDTH FOR JOINT ACCESS DRIVEWAY IS 12 FT.
(4) REFER TO CHAPTER 42 OF THE CODE OF ORDINANCES FOR DRIVEWAY WIDTHS FOR NARROW LOTS.
(5) ONLY MURS AND COURTYARD STYLE DEVELOPMENTS ON CORNER LOTS CAN HAVE ONE–WAY DRIVEWAYS.
(6) REFER TO CHAPTER 42, SECTION 42–146 OF THE CODE OF ORDINANCES FOR EXCEPTIONS TO THE MINIMUM DRIVEWAY WIDTH FOR SHARED DRIVEWAYS.

APPROVED BY:	APPROVED BY:
DocuSigned by: Sukait kanwar 9EF8B0C641F5478...	DocuSigned by: HANG NGUYEN 95A29EFDA7584CD...
CITY ENGINEER	CITY TRAFFIC ENGINEER
APPROVED BY: DocuSigned by: Carol Haddock A93C4105072B3453...	
DIRECTOR OF HOUSTON PUBLIC WORKS	
EFF DATE: NOV–27–2023	DWG NO: 02754–01B

IDS Engineering Group
13430 NW. Freeway, Suite 700
Houston, Tx. 77040
713.462.3178
TxEng Firm 2726 | TxSurv Firm 10110700

SURVEYED BY: KUO & ASSOCIATES, INC.
TBPE FIRM #F–4579; TBPLS FIRM #1007560

CITY OF HOUSTON
HOUSTON PUBLIC WORKS STANDARD

LIFT STATION RENEWAL AND REPLACEMENT FY 2023

DRIVEWAY DETAIL WITH 6" CURBED STREETS

WBS NUMBER	FOR CITY OF HOUSTON USE ONLY
R–000267–0179–3	
DRAWING SCALE	
NOT TO SCALE	
CITY OF HOUSTON PM	
NAWARAJ PANTA, P.E.	
SHEET NO. 317 OF 361	

DWG. NO. C–08

DISCLAIMER:
THE USE OF THIS STANDARD IS GOVERNED BY THE TEXAS ENGINEERING PRACTICE ACT. THE DESIGN REQUIREMENTS ON THIS STANDARD DO NOT PURPORT TO ADDRESS ALL OF THE SAFETY CONCERNS ASSOCIATED WITH THEIR USE. THE ENGINEER OF RECORD (EOR) IS TO REVIEW THESE DESIGN REQUIREMENTS AND BY AUTHORIZING THEIR USE; ACCEPTS RESPONSIBILITY FOR THEIR APPLICABILITY, ADEQUACY AND SAFETY. NO WARRANTY OF ANY KIND IS MADE BY THE CITY OF HOUSTON FOR ANY PURPOSES WHATSOEVER. THE CITY OF HOUSTON ASSUMES NO RESPONSIBILITY FOR INCORRECT RESULTS OR DAMAGES RESULTING FROM ITS USE.
FILE PATH: \\idseg.com\FS\Projects\0000\005708500 CoH Lift Stations – FY 2023\CAD\DWG\PRODUCTION\317–DRIVEWAY DETAILS.dwg

DocuSign Envelope ID: CB71C116-B716-4899-A5EE-0D2F2CC55AF6

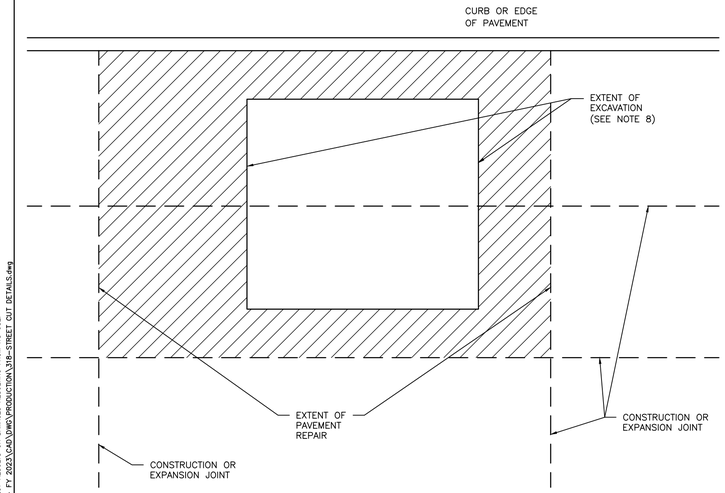

NOTES:

1. EXTENT OF PAVEMENT REPAIR SHALL BE PERPENDICULAR AND PARALLEL TO TRAVEL WAY.
2. REPLACE ENTIRE PANEL WIDTH AND LENGTH TO NEAREST CONSTRUCTION OR EXPANSION JOINT BEYOND EDGE OF EXCAVATION.
3. SAW CUT AND EXPOSE 15" OF REINFORCING STEEL WITHIN EXISTING PAVEMENT. PROVIDE HORIZONTAL DOWELS (PER SPECIFICATION SECTION 02951–PAVEMENT REPAIR AND RESTORATION) IF EXISTING REINFORCING IS BROKEN OFF.
4. REPLACE CURB WHEN ADJACENT LANE IS REPLACED.
5. MAINTAIN EXPANSION JOINTS AT EXISTING LOCATIONS UNLESS OTHERWISE DIRECTED BY CITY ENGINEER.
6. SPECIALTY PAVEMENTS (IE: BRICK PAVERS) TO BE REPLACED WITH MATCHING PAVEMENT IN ALL CASES.
7. REPLACE PAVEMENT MARKINGS IN ACCORDANCE WITH CITY OF HOUSTON STANDARD SPECIFICATIONS 02764–RAISED PAVEMENT MARKERS AND 02767–THERMOPLASTIC PAVEMENT MARKINGS.
8. EXTENT OF EXCAVATION INCLUDES 18" OVERCUT AS SHOWN ON STANDARD DETAIL 02951–04 PAVEMENT REPAIR DETAIL FOR STREET CUTS (FLEX–BASE PAVEMENT & CONCRETE PAVEMENT).

CITY OF HOUSTON
HOUSTON PUBLIC WORKS STANDARD

STREET CUT FOR CONCRETE PAVEMENT REPLACEMENT/RESTORATION AGE OF PAVEMENT ≤ 5YRS
(SCALE: NOT TO SCALE)

APPROVED BY:

DocuSigned by: Suhail Kanwar 9EF8B0C841F5478 CITY ENGINEER	DocuSigned by: Carol Haddock A9DC410B7E0A4E3 DIRECTOR OF HPW
DocuSigned by: KHANG NGUYEN 9BA29EFDA78B4CD CITY TRAFFIC ENGINEER	
EFF DATE: NOV–27–2023	DWG NO: 02951–01

DISCLAIMER:
THE USE OF THIS STANDARD IS GOVERNED BY THE TEXAS ENGINEERING PRACTICE ACT. THE DESIGN REQUIREMENTS ON THIS STANDARD DO NOT PURPORT TO ADDRESS ALL OF THE SAFETY CONCERNS ASSOCIATED WITH THEIR USE. THE ENGINEER OF RECORD (EOR) IS TO REVIEW THESE DESIGN REQUIREMENTS AND BY AUTHORIZING THEIR USE, ACCEPTS RESPONSIBILITY FOR THEIR APPLICABILITY, ADEQUACY AND SAFETY. NO WARRANTY OF ANY KIND IS MADE BY THE CITY OF HOUSTON FOR ANY PURPOSES WHATSOEVER. THE CITY OF HOUSTON ASSUMES NO RESPONSIBILITY FOR INCORRECT RESULTS OR DAMAGES RESULTING FROM ITS USE.
FILE PATH: \\idseg.com\FS\Projects\0000\005708500 CoH Lift Stations – FY 2023\CAD\DWG\PRODUCTION\318–STREET CUT DETAILS.dwg

NO.	DATE	REVISION	APP.

IDS Engineering Group
13430 NW. Freeway, Suite 700
Houston, Tx. 77040
713.462.3178
TxEng Firm 2726 | TxSurv Firm 10110700

THIS DOCUMENT IS RELEASED FOR THE PURPOSE OF REVIEW UNDER THE AUTHORITY OF MARCEL KHOUW, P.E. 101807 ON 05/27/2026. IT IS NOT TO BE USED FOR CONSTRUCTION PURPOSES.

SURVEYED BY: KUO & ASSOCIATES, INC.
TBPE FIRM #F–4578; TBPLS FIRM #1007560

CITY OF HOUSTON
HOUSTON PUBLIC WORKS

LIFT STATION RENEWAL AND REPLACEMENT FY 2023

STREET CUT FOR CONCRETE PAVEMENT REPLACEMENT RESTORATION

WBS NUMBER	FOR CITY OF HOUSTON USE ONLY
R–000267–0179–4	
DRAWING SCALE	
HORIZ: N.T.S. VERT: N/A	
CITY OF HOUSTON PM	
NAWARAJ PANTA, P.E.	
SHEET NO. 318 OF 361	

DWG. NO.
C–09

PLOTTED: 5/13/2026 6:50 PM
FILE PATH: \\idseg.com\FS\Projects\0000\005708500 CoH Lift Stations – FY 2023\CAD\DWG\PRODUCTION\318–STREET CUT DETAILS.dwg

PLOTTED: 5/13/2026 6:50 PM

DocuSign Envelope ID: CB71C116-B716-4899-A5EE-0D2F2CC55AF6

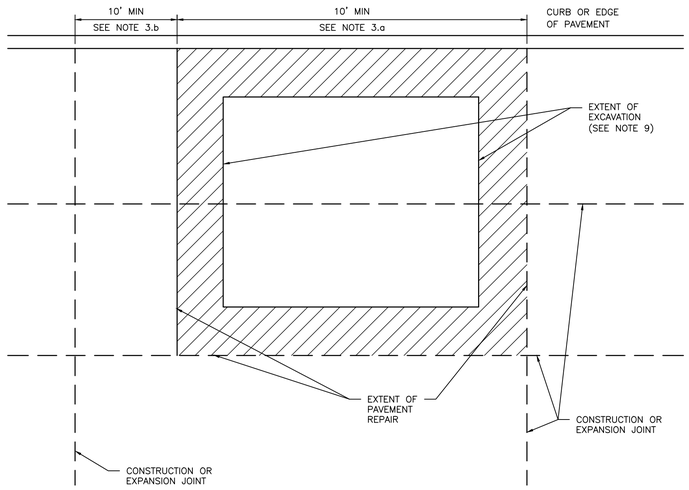

NOTES:

1. EXTENT OF PAVEMENT REPAIR SHALL BE PERPENDICULAR AND PARALLEL TO TRAVEL WAY.
2. WIDTH:
   REPLACE PANEL WIDTH TO NEAREST CONSTRUCTION OR EXPANSION JOINT BEYOND EDGE OF EXCAVATION.
3. LENGTH:
   a. MINIMUM LENGTH OF PAVEMENT REPAIR ALONG TRAVEL WAY IS 10' FROM THE NEAREST JOINT.
   b. IF EXTENT OF PAVEMENT REPAIR IS LESS THAN 10' FROM EXISTING CONSTRUCTION OR EXPANSION JOINT, EXTEND PAVEMENT REPAIR TO EXISTING JOINT.
4. SAW CUT AND EXPOSE 15" OF REINFORCING STEEL AROUND EDGE OF PANEL REPLACEMENT. PROVIDE HORIZONTAL DOWELS (PER SPECIFICATION SECTION 02951–PAVEMENT REPAIR AND RESTORATION) IF REINFORCING IS BROKEN OFF OR DOES NOT EXIST.
5. REPLACE CURB WHEN ADJACENT LANE IS REPLACED.
6. MAINTAIN EXPANSION JOINTS AT EXISTING LOCATIONS UNLESS OTHERWISE DIRECTED BY CITY ENGINEER.
7. SPECIALTY PAVEMENTS (IE: BRICK PAVERS) TO BE REPLACED WITH MATCHING PAVEMENT IN ALL CASES.
8. REPLACE PAVEMENT MARKINGS IN ACCORDANCE WITH CITY OF HOUSTON STANDARD SPECIFICATIONS 02764–RAISED PAVEMENT MARKERS AND 02767–THERMOPLASTIC PAVEMENT MARKINGS.
9. EXTENT OF EXCAVATION INCLUDES 18" OVERCUT AS SHOWN ON STANDARD DETAIL 02951–04 PAVEMENT REPAIR DETAIL FOR STREET CUTS (FLEX–BASE PAVEMENT & CONCRETE PAVEMENT).

DISCLAIMER:
THE USE OF THIS STANDARD IS GOVERNED BY THE TEXAS ENGINEERING PRACTICE ACT. THE DESIGN REQUIREMENTS ON THIS STANDARD DO NOT PURPORT TO ADDRESS ALL OF THE SITE SPECIFIC ENGINEERING ASPECTS THAT MAY BE REQUIRED TO PROPERLY DESIGN A STREET FOR ITS INTENDED USE. THE USER OF THIS STANDARD IS EXPECTED TO EXERCISE REASONABLE AND PRUDENT ENGINEERING JUDGMENT IN ITS USE. USE OF THIS STANDARD CONSTITUTES ACCEPTANCE THAT THE USER ASSUMES ALL RESPONSIBILITY FOR THE APPLICATION OF THIS STANDARD IN A SPECIFIC APPLICATION. THE USER ALSO ACCEPTS RESPONSIBILITY FOR THEIR APPLICABILITY, ADEQUACY AND SAFETY. NO WARRANTY OF ANY KIND IS MADE BY THE CITY OF HOUSTON FOR ANY PURPOSES WHATSOEVER. THE CITY OF HOUSTON ASSUMES NO RESPONSIBILITY FOR INCORRECT RESULTS OR DAMAGES RESULTING FROM ITS USE

FILE PATH: \\idseg.com\FS\Projects\0000\005708500 CoH Lift Stations - FY 2023\CAD\DWG\PRODUCTION\319-STREET CUT DETAILS.dwg

CITY OF HOUSTON
HOUSTON PUBLIC WORKS STANDARD

STREET CUT FOR CONCRETE PAVEMENT REPLACEMENT/RESTORATION AGE OF PAVEMENT > 5YRS
(SCALE: NOT TO SCALE)

APPROVED BY:

DocuSigned by: Sukul Kanwar — CITY ENGINEER
DocuSigned by: KHANG NGUYEN — CITY TRAFFIC ENGINEER
DocuSigned by: Carol Haddock — DIRECTOR OF HPW

EFF DATE: NOV–27–2023 | DWG NO: 02951–02

NO.	DATE	REVISION	APP.

IDS Engineering Group
13430 NW. Freeway, Suite 700
Houston, Tx. 77040
713.462.3178
TxEng Firm 2726 | TxSurv Firm 10110700

SURVEYED BY: KUO & ASSOCIATES, INC.
TBPE FIRM #F–4578; TBPLS FIRM #1007560

THIS DOCUMENT IS RELEASED FOR THE PURPOSE OF REVIEW UNDER THE AUTHORITY OF MARCEL KHOUW, P.E. 101807 ON 05/27/2026. IT IS NOT TO BE USED FOR CONSTRUCTION PURPOSES.

CITY OF HOUSTON
HOUSTON PUBLIC WORKS

LIFT STATION RENEWAL AND REPLACEMENT FY 2023

STREET CUT FOR CONCRETE PAVEMENT REPLACEMENT RESTORATION

WBS NUMBER	FOR CITY OF HOUSTON USE ONLY
R–000267–0179–4	
DRAWING SCALE	
HORIZ: N.T.S. VERT: N/A	
CITY OF HOUSTON PM	
NAWARAJ PANTA, P.E.	
SHEET NO. 319 OF 361	

DWG. NO. C–10

FILE PATH: \\idseg.com\FS\Projects\0000\005708500 CoH Lift Stations - FY 2023\CAD\DWG\PRODUCTION\319-STREET CUT DETAILS.dwg

PLOTTED: 5/13/2026 6:50 PM

DocuSign Envelope ID: CB71C116-B716-4899-A5EE-0D2F2CC55AF6

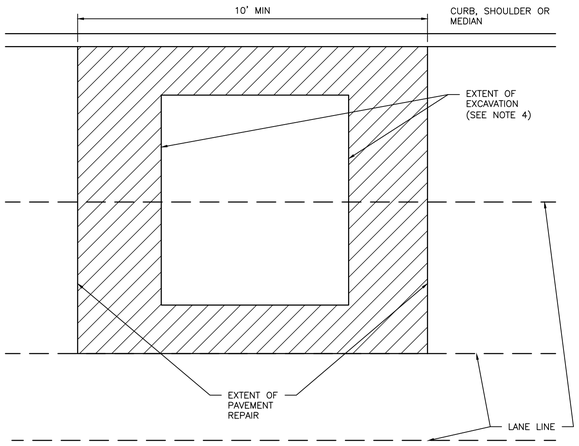

NOTES:

1. EXTENT OF PAVEMENT REPAIR SHALL BE PERPENDICULAR AND PARALLEL TO TRAVEL WAY.
2. FLEXIBLE BASE: REPLACE BASE TO SAME THICKNESS PLUS TWO INCHES (2") FOR EXTENT OF EXCAVATION. USE APPROVED BASE MATERIAL TYPE.*
3. SURFACE COURSE:
   - 3.1. WIDTH: SURFACE MILL AND OVERLAY FULL WIDTH OF LANE(S) TO NEAREST LANE DIVIDER BEYOND EDGE OF EXCAVATION.
   - 3.2. LENGTH: MINIMUM LENGTH OF SURFACE MILL ALONG TRAVEL WAY IS 10'.
   - 3.3. REPLACE PAVEMENT MARKINGS IN ACCORDANCE WITH CITY OF HOUSTON STANDARD SPECIFICATIONS 02764–RAISED PAVEMENT MARKERS AND 02767–THERMOPLASTIC PAVEMENT MARKINGS.
4. EXTENT OF EXCAVATION INCLUDES 18" OVER CUT AS SHOWN ON STANDARD DETAIL 02951–04 PAVEMENT REPAIR DETAIL FOR STREET CUTS (FLEX–BASE PAVEMENT AND CONCRETE PAVEMENT).
5. ADDITIONAL REQUIREMENTS FOR ASPHALT OVERLAY ON CONCRETE PAVEMENT:
   - 5.1. REPLACE CONCRETE FOR EXTENT OF EXCAVATION. REPLACE TO SAME THICKNESS PLUS TWO INCHES (2").
   - 5.2. WIDTH:
     - 5.2.1. IF EXCAVATION EXTENDS MORE THAN HALF OF A LANE, REPLACE ENTIRE LANE OF CONCRETE. OTHERWISE USE STANDARD DETAIL 02951–04 THROUGH 05.
   - 5.3. SAW CUT AND EXPOSE 15" OF REINFORCING STEEL AROUND EDGE OF CONCRETE REPLACEMENT. IF NO REINFORCING STEEL EXISTS, USE HORIZONTAL DOWELS PER CITY OF HOUSTON STANDARD SPECIFICATION SECTION 02951–PAVEMENT REPAIR AND RESTORATION.
   - 5.4. REPLACE CURB WHEN ADJACENT LANE IS REPLACED.
   - 5.5. MAINTAIN CONCRETE EXPANSION JOINTS AT EXISTING LOCATIONS UNLESS OTHERWISE APPROVED BY CITY ENGINEER.

CITY OF HOUSTON
HOUSTON PUBLIC WORKS STANDARD

STREET CUT FOR ASPHALT PAVEMENT REPLACEMENT/RESTORATION FOR PAVEMENT OF ALL AGES
(SCALE: NOT TO SCALE)

APPROVED BY:

DocuSigned by: Sukul Kanwar — CITY ENGINEER
DocuSigned by: HANG NGUYEN — CITY TRAFFIC ENGINEER
DocuSigned by: Carol Haddock — DIRECTOR OF HPW

EFF DATE: NOV–27–2023 | DWG NO: 02951–03

DISCLAIMER:
THE USE OF THIS STANDARD IS GOVERNED BY THE TEXAS ENGINEERING PRACTICE ACT. THE DESIGN REQUIREMENTS ON THIS STANDARD DO NOT PURPORT TO ADDRESS ALL OF THE ENGINEERING ASPECTS THAT MAY BE REQUIRED FOR ANY PARTICULAR INSTALLATION. IT IS RESPONSIBILITY OF THE ENGINEER WHO USES THIS STANDARD TO ADAPT IT TO THE CONDITIONS OF USE. ACCEPTS RESPONSIBILITY FOR THEIR APPLICABILITY, ADEQUACY AND SAFETY. NO WARRANTY OF ANY KIND IS MADE BY THE CITY OF HOUSTON FOR ANY PURPOSES WHATSOEVER. THE CITY OF HOUSTON ASSUMES NO RESPONSIBILITY FOR INCORRECT RESULTS OR DAMAGES RESULTING FROM ITS USE

FILE PATH: \\dseg.com\FS\Projects\0000\005708500 CoH Lift Stations - FY 2023\CAD\DWG\PRODUCTION\320-STREET CUT DETAILS.dwg

NO.	DATE	REVISION	APP.

IDS Engineering Group
13430 NW. Freeway, Suite 700
Houston, Tx. 77040
713.462.3178
TxEng Firm 2726 | TxSurv Firm 10110700

SURVEYED BY: KUO & ASSOCIATES, INC.
TBPE FIRM #F–4578; TBPLS FIRM #1007560

THIS DOCUMENT IS RELEASED FOR THE PURPOSE OF REVIEW UNDER THE AUTHORITY OF MARCEL KHOUW, P.E. 101807 ON 05/27/2026. IT IS NOT TO BE USED FOR CONSTRUCTION PURPOSES.

CITY OF HOUSTON
HOUSTON PUBLIC WORKS

LIFT STATION RENEWAL AND REPLACEMENT FY 2023

STREET CUT FOR ASPHALT PAVEMENT REPLACEMENT RESTORATION

WBS NUMBER	FOR CITY OF HOUSTON USE ONLY
R–000267–0179–4	
DRAWING SCALE	
HORIZ: N.T.S. VERT: N/A	
CITY OF HOUSTON PM	
NAWARAJ PANTA, P.E.	

DWG. NO.	SHEET NO.
C–11	320 OF 361

PLOTTED: 5/13/2026 6:50 PM

DocuSign Envelope ID: CB71C116-B716-4899-A5EE-0D2F2CC55AF6

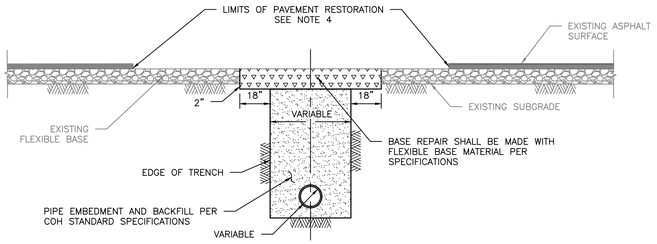

ELEVATION A
REPAIR OF FLEXIBLE BASE PAVEMENT

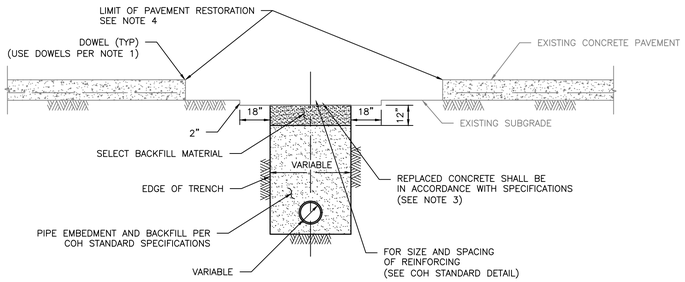

ELEVATION B
REPAIR OF REINFORCED CONCRETE PAVEMENT

NOTES:

1. EXPOSE 15" OF REINFORCING STEEL AT PROPOSED SAWED JOINT. IF NO REINFORCING STEEL EXISTS, USE HORIZONTAL DOWELS. HORIZONTAL DOWELS SHALL BE #6 BAR, 24" LONG, 24" C-C, DRILLED AND EMBEDDED 8" INTO THE CENTER OF THE EXISTING SLAB. WITH "PO ROC" OR EQUAL.
2. IF REINFORCED CONCRETE IS OVERLAYED WITH ASPHALT, REPLACE WITH 2" MIN HMAC SURFACING.
3. REFER TO STANDARD DETAIL 02751-01 FOR REINFORCING STEEL REQUIREMENTS.
4. REFER TO STANDARD DETAIL 02951-01 THROUGH 03 FOR PAVEMENT RESTORATION LIMITS.

CITY OF HOUSTON
HOUSTON PUBLIC WORKS STANDARD

PAVEMENT REPAIR DETAIL
FOR STREET CUTS
(FLEX-BASE PAVEMENT & CONCRETE PAVEMENT)
(SCALE: NOT TO SCALE)

APPROVED BY:

DocuSigned by: Sukul Kanwar — CITY ENGINEER
DocuSigned by: KHANG NGUYEN — CITY TRAFFIC ENGINEER
DocuSigned by: Carol Haddock — DIRECTOR OF HPW

EFF DATE: NOV-27-2023
DWG NO: 02951-04

DISCLAIMER:
THE USE OF THIS STANDARD IS GOVERNED BY THE TEXAS ENGINEERING PRACTICE ACT. THE SEAL APPEARING ON THIS STANDARD DO NOT PURPORT TO ADDRESS THE SUITABILITY OF THE INFORMATION CONTAINED HEREIN FOR ANY PARTICULAR USE OR APPLICATION. THE CITY OF HOUSTON MAKES NO EXPRESS OR IMPLIED WARRANTIES OR GUARANTEES IN CONNECTION WITH THE USE OF THE INFORMATION CONTAINED HEREIN. ALL USERS ASSUME ALL RESPONSIBILITY AND LIABILITY FOR PROPER AND CORRECT USE OF THE INFORMATION CONTAINED HEREIN AND AGREE TO INDEMNIFY THE CITY OF HOUSTON FROM ANY AND ALL CLAIMS, DAMAGES, LOSS, ACCEPTS RESPONSIBILITY FOR THEIR APPLICABILITY, ADEQUACY AND SAFETY. NO WARRANTY OF ANY KIND IS MADE BY THE CITY OF HOUSTON, WHATSOEVER. THE CITY OF HOUSTON ASSUMES NO RESPONSIBILITY FOR INCORRECT RESULTS OR DAMAGES RESULTING FROM ITS USE

FILE PATH: \\idseg.com\FS\Projects\0000\005708500 CoH Lift Stations - FY 2023\CAD\DWG\PRODUCTION\321-STREET CUT DETAILS.dwg

NO.	DATE	REVISION	APP.

IDS Engineering Group
13430 NW. Freeway, Suite 700
Houston, Tx. 77040
713.462.3178
TxEng Firm 2726 | TxSurv Firm 10110700

SURVEYED BY: KUO & ASSOCIATES, INC.
TBPE FIRM #F-4578; TBPLS FIRM #1007560

THIS DOCUMENT IS RELEASED FOR THE PURPOSE OF REVIEW UNDER THE AUTHORITY OF MARCEL KHOUW, P.E. 101807 ON 05/27/2026. IT IS NOT TO BE USED FOR CONSTRUCTION PURPOSES.

CITY OF HOUSTON
HOUSTON PUBLIC WORKS

LIFT STATION RENEWAL AND REPLACEMENT FY 2023

PAVEMENT REPAIR DETAIL FOR STREET CUTS

WBS NUMBER	FOR CITY OF HOUSTON USE ONLY
R-000267-0179-4	
DRAWING SCALE	
HORIZ: N.T.S. VERT: N/A	
CITY OF HOUSTON PM	
NAWARAJ PANTA, P.E.	
SHEET NO. 321 OF 361	

DWG. NO.
C-12

FILE PATH: \\idseg.com\FS\Projects\0000\005708500 CoH Lift Stations - FY 2023\CAD\DWG\PRODUCTION\321-STREET CUT DETAILS.dwg

PLOTTED: 5/13/2026 6:50 PM

DocuSign Envelope ID: CB71C116-B716-4899-A5EE-0D2F2CC55AF6

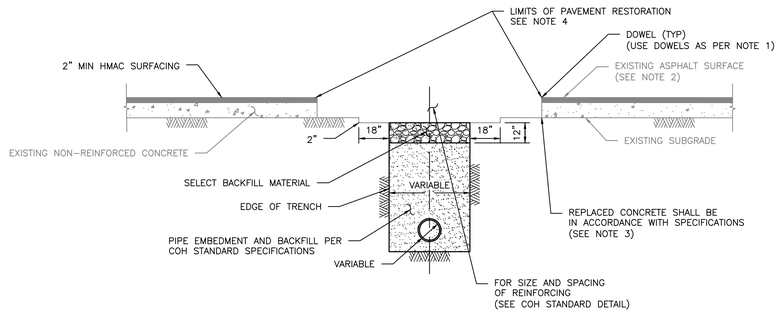

ELEVATION C
REPAIR OF NON-REINFORCED CONCRETE PAVEMENT

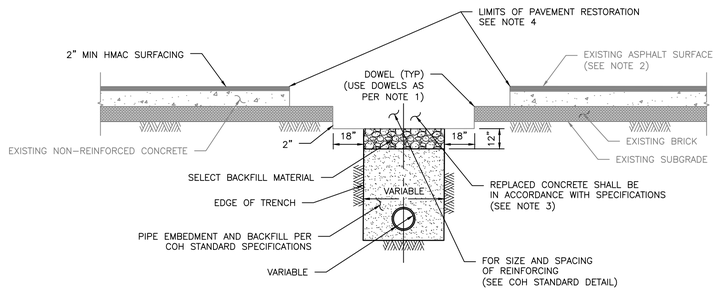

ELEVATION D
REPAIR OF NON-REINFORCED CONCRETE PAVEMENT WITH BRICK

NOTES:

1. EXPOSE 15" OF REINFORCING STEEL AT PROPOSED SAWED JOINT. IF NO REINFORCING STEEL EXISTS, USE HORIZONTAL DOWELS. HORIZONTAL DOWELS SHALL BE #6 BAR, 24" LONG, 24" C-C, DRILLED AND EMBEDDED 8" INTO THE CENTER OF THE EXISTING SLAB. WITH "PO ROC" OR EQUAL.
2. IF REINFORCED CONCRETE IS OVERLAYED REPLACE WITH SAME THICKNESS OF HMAC SURFACING.
3. REFER TO STANDARD DETAIL 02751-01 FOR REINFORCING STEEL REQUIREMENT
4. REFER TO STANDARD DETAILS 02951-01 THROUGH 03 FOR PAVEMENT RESTORATION LIMITS.

CITY OF HOUSTON
HOUSTON PUBLIC WORKS STANDARD

PAVEMENT REPAIR DETAIL
FOR STREET CUTS
(NON-REINFORCED CONCRETE & BRICK PAVEMENT)
(SCALE: NOT TO SCALE)

APPROVED BY:

DocuSigned by: Sukai Kanwar — CITY ENGINEER
DocuSigned by: KHANG NGUYEN — CITY TRAFFIC ENGINEER
DocuSigned by: Carol Haddock — DIRECTOR OF HPW

EFF DATE: NOV-27-2023 | DWG NO: 02951-05

DISCLAIMER:
THE USE OF THIS STANDARD IS GOVERNED BY THE TEXAS ENGINEERING PRACTICE ACT. THE SEAL REQUIREMENTS ON THIS STANDARD DO NOT PURPORT TO ADDRESS ALL OF THE DESIGN CONSIDERATIONS WITH WHICH THE ENGINEER OF RECORD SHALL BE CONVERSANT IN ORDER TO PROPERLY USE THIS STANDARD. THE ENGINEER OF RECORD, BY USING THIS STANDARD FOR A SPECIFIC PURPOSE, MAKES NO WARRANTY OF ANY KIND TO ANY OTHER USER THEREOF, AND HEREBY AGREES TO INDEMNIFY AND HOLD HARMLESS THE CITY OF HOUSTON FROM ANY AND ALL LIABILITY, CLAIMS, OR DAMAGES WHICH MAY ARISE FROM SUCH USE. IF THE ENGINEER OF RECORD USES THIS STANDARD FOR ANY PURPOSE OTHER THAN THAT FOR WHICH IT WAS INTENDED, OR MODIFIES THIS STANDARD IN ANY WAY, THE ENGINEER OF RECORD ACCEPTS RESPONSIBILITY FOR THEIR APPLICABILITY, ADEQUACY AND SAFETY, NO WARRANTY OF ANY KIND IS MADE BY THE CITY OF HOUSTON FOR ANY PURPOSES WHATSOEVER. THE CITY OF HOUSTON ASSUMES NO RESPONSIBILITY FOR INCORRECT RESULTS OR DAMAGES RESULTING FROM ITS USE

FILE PATH: \\idseg.com\FS\Projects\0000\005708500 CoH Lift Stations - FY 2023\CAD\DWG\PRODUCTION\322-STREET CUT DETAILS.dwg

IDS Engineering Group
13430 NW. Freeway, Suite 700
Houston, Tx. 77040
713.462.3178
TxEng Firm 2726 | TxSurv Firm 10110700

SURVEYED BY: KUO & ASSOCIATES, INC.
TBPE FIRM #F-4578; TBPLS FIRM #1007560

THIS DOCUMENT IS RELEASED FOR THE PURPOSE OF REVIEW UNDER THE AUTHORITY OF MARCEL KHOUW, P.E. 101807 ON 05/27/2026. IT IS NOT TO BE USED FOR CONSTRUCTION PURPOSES.

CITY OF HOUSTON
HOUSTON PUBLIC WORKS

LIFT STATION RENEWAL
AND REPLACEMENT FY 2023

PAVEMENT REPAIR DETAIL FOR STREET CUTS

WBS NUMBER	FOR CITY OF HOUSTON USE ONLY
R-000267-0179-4	
DRAWING SCALE	
HORIZ: N.T.S. VERT: N/A	
CITY OF HOUSTON PM	
NAWARAJ PANTA, P.E.	
SHEET NO. 322 OF 361	

DWG. NO. C-13

NO.	DATE	REVISION	APP.

DocuSign Envelope ID: 9B122261-CF05-457B-9A65-2650F40B66D5

DISCLAIMER:
THE USE OF THIS STANDARD IS GOVERNED BY THE TEXAS ENGINEERING PRACTICE ACT. THE DESIGN REQUIREMENTS ON THIS STANDARD DO NOT PURPORT TO ADDRESS ALL OF THE SAFETY CONCERNS ASSOCIATED WITH THEIR USE. THE ENGINEER OF RECORD (EOR) IS TO REVIEW THESE DESIGN REQUIREMENTS AND BY AUTHORIZING THEIR USE, ACCEPTS RESPONSIBILITY FOR THEIR APPLICABILITY, ADEQUACY AND SAFETY. NO WARRANTY OF ANY KIND IS MADE BY THE CITY OF HOUSTON FOR ANY PURPOSES WHATSOEVER. THE CITY OF HOUSTON ASSUMES NO RESPONSIBILITY FOR INCORRECT RESULTS OR DAMAGES RESULTING FROM ITS USE.

FILE PATH: \\idseg.com\FS\Projects\0000\005708500 CoH Lift Stations – FY 2023\CAD\DWG\PRODUCTION\323–CURB GUTTER HEADER DTLS.dwg

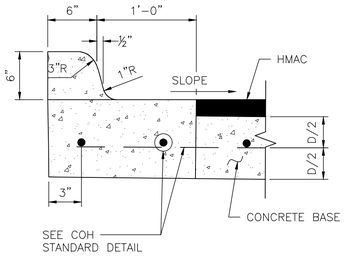

ESPLANADE CURB CONNECTED TO CONCRETE BASE

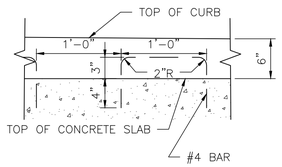

ALTERNATE CONCRETE CURB REINFORCEMENT

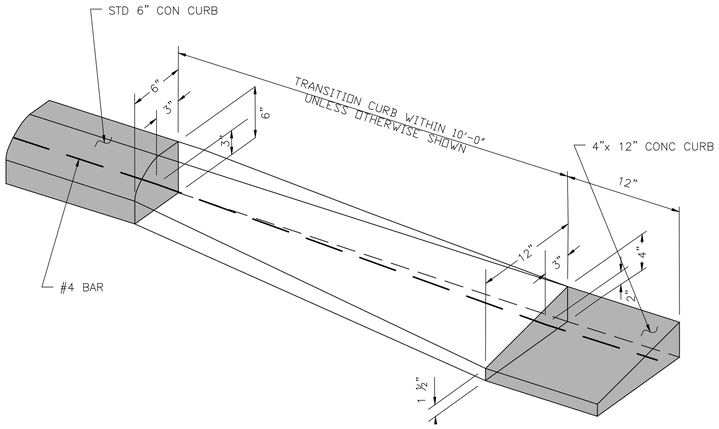

CURB TRANSITION

(SEE NOTES)

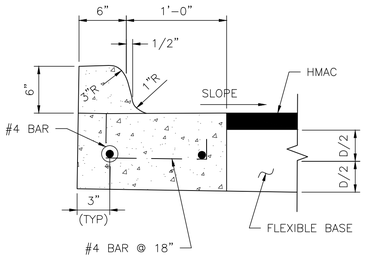

ESPLANADE CURB CONNECTED TO FLEXIBLE BASE

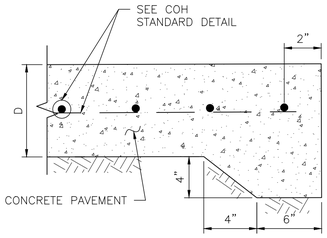

STANDARD CONCRETE PAVING HEADER

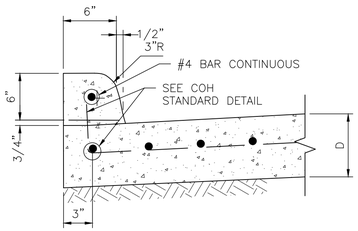

CONCRETE CURB

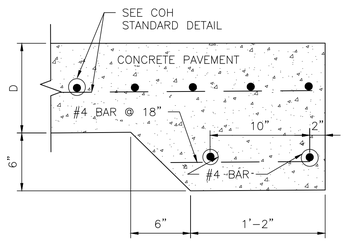

STANDARD RAILROAD HEADER

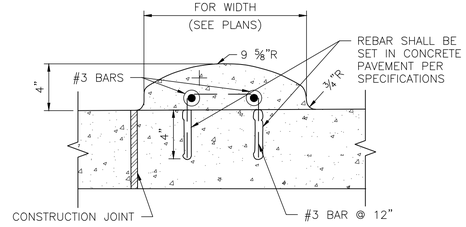

MOUNTABLE CURB

WHEN CONCRETE CURB IS TO BE PLACED EXISTING CONCRETE USE BASE
#4 BAR @ 18x10" LONG, DOWELED AND SET IN EPOXY GROUT.
SET #4 DOWEL BARS, 25" LONG AT 12" C–C WHEN PAVEMENT SECTION POURED.

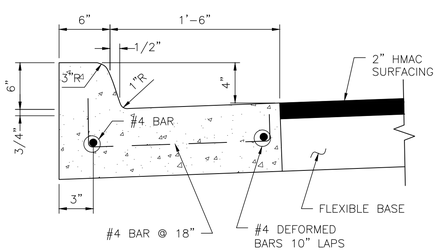

MONOLITHIC CURB AND GUTTER

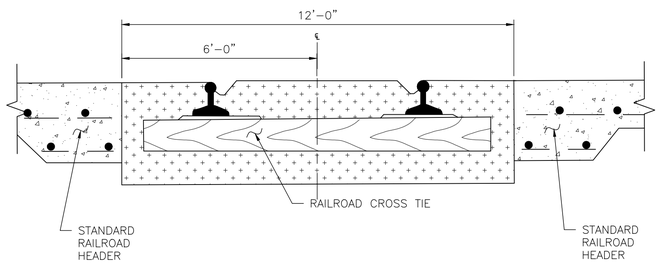

STANDARD RAILROAD CROSSING – SINGLE TRACK

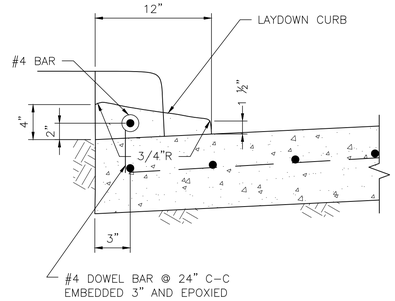

4–INCH x 12–INCH TRANSITION CURB

(SEE NOTES)

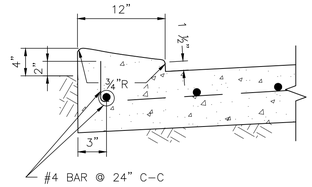

4–INCH x 12–INCH MONOLITHIC CURB

(SEE NOTES)

4"x12" MONOLITHIC AND TRANSITION CURB NOTES:

1. 6–INCH CONCRETE CURB TO BE CONSTRUCTED ON ALL ESPLANADES, ISLANDS, NON–RESIDENTIAL STREETS, AND RESIDENTIAL STREETS.
2. TRANSITIONS FROM 6– INCH CONCRETE CURB TO 4–INCH x 12–INCH CONCRETE CURB TO BE ACCOMPLISHED WITHIN 10 FEET, UNLESS OTHERWISE SHOWN. IF THIS 10–FEET TRANSITION CURB IS NOT POURED MONOLITHICALLY WITH THE PAVEMENT, THEN REINFORCING STEEL AS SHOWN IN "4–INCH x 12–INCH TRANSITION CURB" IS TO BE INSTALLED.

APPROVED BY:	APPROVED BY:
DocuSigned by: Sulat Kanwar 9EF8B0C641F5478...	DocuSigned by: KHANG NGUYEN 95A28EFDA756ACD...
CITY ENGINEER	CITY TRAFFIC ENGINEER
APPROVED BY: DocuSigned by: Carl Haddock A5DC41B87263453...	
DIRECTOR OF HOUSTON PUBLIC WORKS	
EFF DATE: NOV–27–2023	DWG NO: 02771–01

IDS Engineering Group
13430 NW. Freeway, Suite 700
Houston, Tx. 77040
713.462.3178
TxEng Firm 2726 | TxSurv Firm 10110700

SURVEYED BY: KUO & ASSOCIATES, INC.
TBPE FIRM #F–4579; TBPLS FIRM #1007560

CITY OF HOUSTON

HOUSTON PUBLIC WORKS STANDARD

LIFT STATION RENEWAL AND REPLACEMENT FY 2023

CURB, CURB AND GUTTER AND HEADER DETAILS

WBS NUMBER	FOR CITY OF HOUSTON USE ONLY
R–000267–0179–3	
DRAWING SCALE	
NOT TO SCALE	
CITY OF HOUSTON PM	
NAWARAJ PANTA, P.E.	
SHEET NO. 323 OF 361	

DWG. NO. C–14

PLOTTED: 5/13/2026 6:50 PM

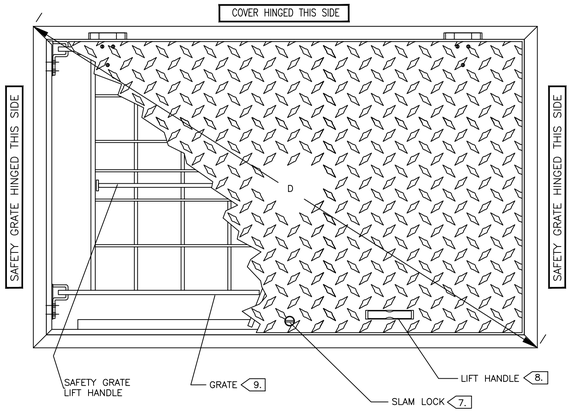

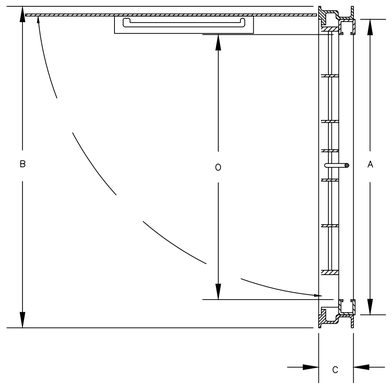

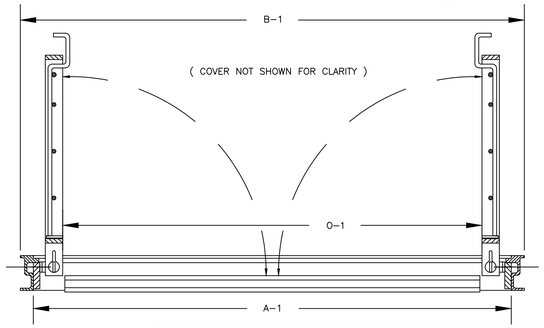

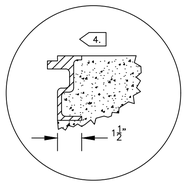

DETAIL B

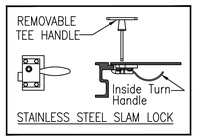

DETAIL A

PATTERN NO.	DIMENSIONS IN INCHES		UNOBSTRUCTED CLEAR OPENING	HEIGHT	DIAGONAL
ALUMINUM	A x A1	B x B1	O x O1	C	D
FLED-AOSH	PER MANUFACTURER	PER MANUFACTURER	MATCH EXISTING	PER MANUFACTURER	PER MANUFACTURER

1.) MATERIAL SHALL BE 6061-T6 ALUMINUM FOR BARS, ANGLES, AND EXTRUSIONS. 1/4" DIAMOND PLATE SHALL BE 5086 ALUMINUM. EXTERIOR OF FRAME WHICH COMES IN CONTACT WITH CONCRETE SHALL HAVE ONE COAT FOREST GREEN PAINT.

2.) UNIT DESIGNED PEDESTRIAN RATED FOR A MINIMUM LIVE LOAD OF 300 LBS./SQ.FT.

3.) DOOR SHALL BE EQUIPPED WITH A HOLD OPEN ARM. DOOR SHALL LOCK OPEN IN THE 90 DEGREE POSITION. HOLD OPEN ARM SHALL BE FASTENED TO THE FRAME WITH A 1/2" GRADE 316 STAINLESS STEEL BOLT.

4. ANGLE FRAME SHALL BE OF EXTRUDED ALUMINUM, WITH A CONTINUOUS 1-1/2" ANCHOR FLANGE.

5.) COVER HINGES SHALL BE OF HEAVY DUTY DESIGN. MATERIAL SHALL BE GRADE 316 STAINLESS STEEL. EACH HINGE SHALL HAVE A GRADE 316 STAINLESS STEEL, 3/8" DIAMETER HINGE PIN. HINGE SHALL BE FASTENED TO ANGLE AND DIAMOND PLATE WITH GRADE 316 STAINLESS STEEL BOLTS AND NY-LOCK NUTS.

6.) ALL HARDWARE SHALL BE STAINLESS STEEL.

7. EACH HATCH SHALL BE SUPPLIED WITH A GRADE 316 STAINLESS STEEL SLAM LOCK, WITH KEY WAY PROTECTED BY A THREADED PLUG. PLUG SHALL BE FLUSH WITH THE TOP OF THE 1/4" DIAMOND PLATE. SLAM LOCK SHALL BE FASTENED WITH FOUR GRADE 316 STAINLESS STEEL BOLTS AND WASHERS.

8. EACH HATCH SHALL BE EQUIPPED WITH AN ALUMINUM LIFT HANDLE. THE LIFT HANDLE SHALL BE FLUSH WITH THE TOP OF THE 1/4" DIAMOND PLATE.

9. UNITS SHALL BE SUPPLIED WITH A HINGED SAFETY GRATES ALUMINUM TO PROVIDE PROTECTION AGAINST FALL THROUGH AND TO CONTROL ACCESS TO THE CONFINED SPACE.

10.) HATCH COVERS SHALL BE PAINTED FOREST GREEN TO DEMARCATE AND PREVENT VANDALISM.

LIFT STATION WET WELL AND SPLITTER BOX HATCHES

SOURCE: ITT/FLYGT

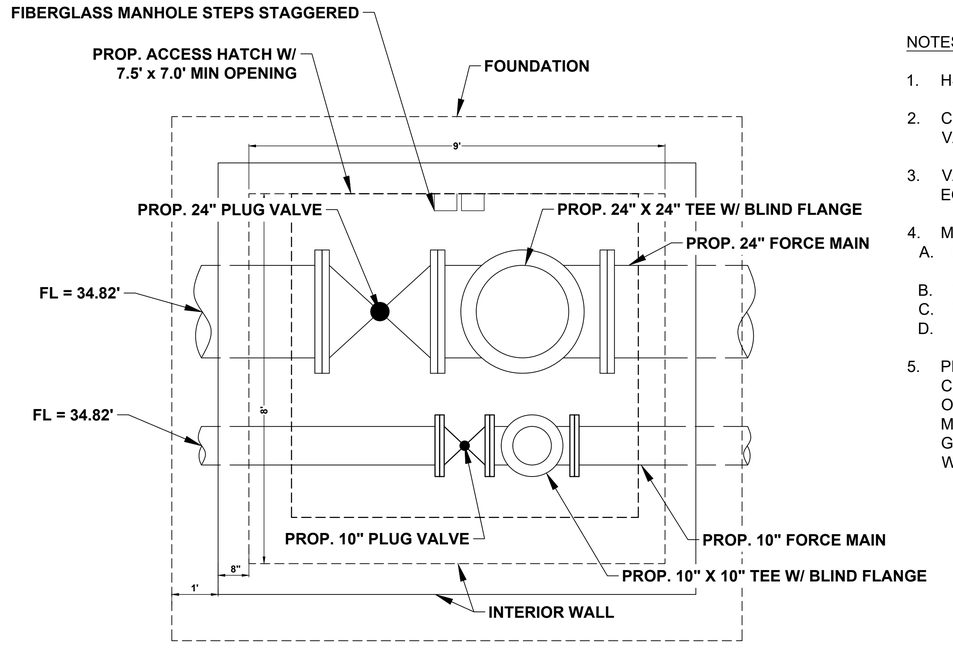

PLAN VIEW

SCALE: N.T.S.

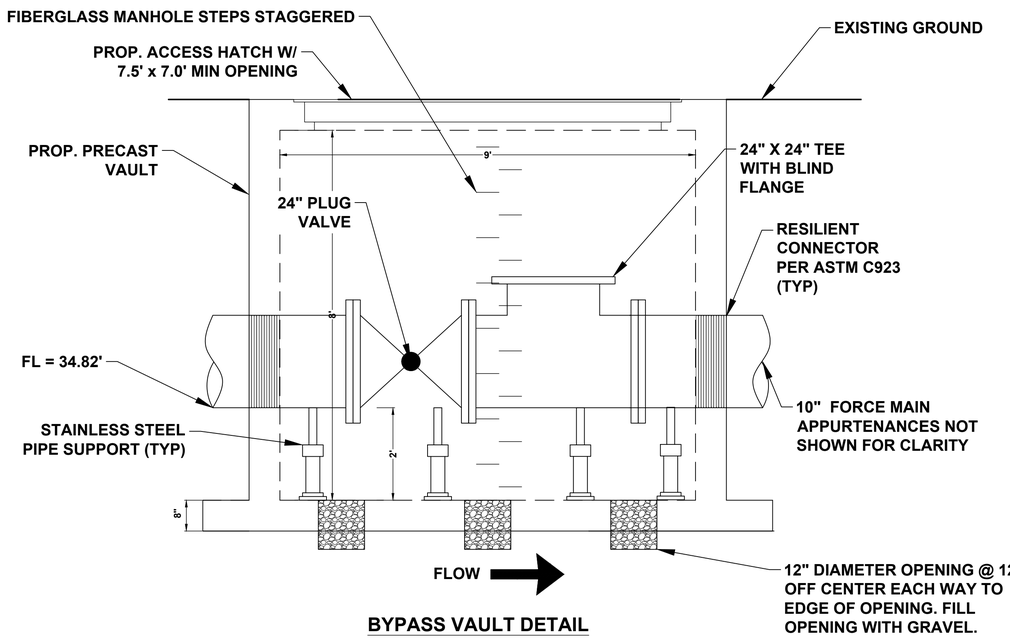

BYPASS VAULT DETAIL

SCALE: N.T.S.

NOTES:

1. HS-20 RATED
2. CONTRACTOR TO PROVIDE SIGNED AND SEALED VAULT DRAWINGS.
3. VAULT TO BE OLD CASTLE OR APPROVED EQUAL.
4. MATERIAL REQUIREMENTS
   A. CONCRETE 28 DAY COMPRESSIVE STRENGTH SHALL BE 5000 PSI MIN
   B. CEMENT: TYPE II PER ASTM C-150
   C. FLY ASH: TYPE F PER ASTM C-618
   D. STEEL REINFORCEMENT: ASTM A-615 GRADE 60
5. PROVIDE LINED DUCTILE IRON PIPE, THICK, CLASS 53, FOR FORCE MAIN WITHIN 12" OF OUTSIDE FACE OF MANHOLE. JOINTS WITHIN MANHOLE MAY BE FLANGED (AS SHOWN) OR GROOVED (PER ASTM 606) WITHIN MANHOLE, WITH 316 STAINLESS STEEL BOLTS.

NO.	DATE	REVISION	APP.

IDS Engineering Group
13430 NW. Freeway, Suite 700
Houston, Tx. 77040
713.462.3178
TxEng Firm 2726 | TxSurv Firm 10110700

SURVEYED BY: KUO & ASSOCIATES, INC.
TBPE FIRM #F-4578; TBPLS FIRM #1007560

THIS DOCUMENT IS RELEASED FOR THE PURPOSE OF REVIEW UNDER THE AUTHORITY OF MARCEL KHOUW, P.E. 101807 ON 05/27/2026. IT IS NOT TO BE USED FOR CONSTRUCTION PURPOSES.

CITY OF HOUSTON
HOUSTON PUBLIC WORKS

LIFT STATION RENEWAL AND REPLACEMENT FY 2023

TYPICAL SITE DETAILS

WBS NUMBER	FOR CITY OF HOUSTON USE ONLY
R-000267-0179-4	
DRAWING SCALE	
HORIZ: N.T.S. VERT: N/A	
CITY OF HOUSTON PM	
NAWARAJ PANTA, P.E.	

DWG. NO.	SHEET NO.
C-15	SHEET NO. 324 OF 361

FILE PATH: \\idseg.com\FS\Projects\0000\005708500 CoH Lift Stations - FY 2023\CAD\DWG\PRODUCTION\324-TYPICAL SITE DETAILS.dwg

PLOTTED: 5/13/2026 6:50 PM

DocuSign Envelope ID: 9B122261-CF05-457B-9A65-2650F40B66D5

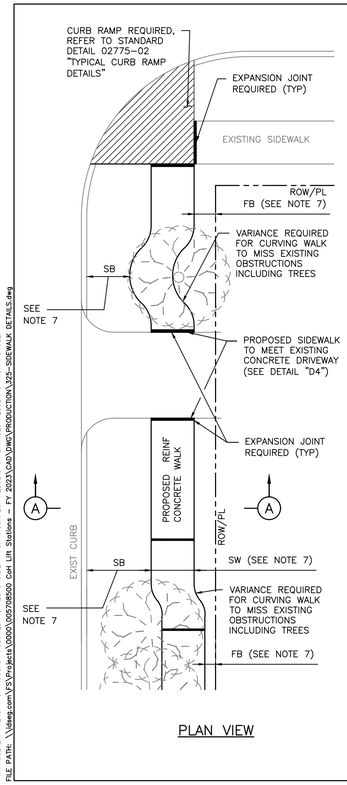

PLAN VIEW

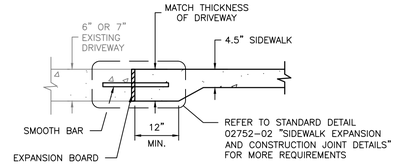

DETAIL D4
DRIVEWAY/SIDEWALK HEADER

TABLE 1

REINFORCING STEEL INFORMATION
FOR 4 ½ " THICK SIDEWALKS
EXPANSION JOINT SPACING = 40 FT
fc' = 3,500 PSI AND fy = 60,000 PSI
REFER TO CONTRACT DRAWINGS FOR SIDEWALKS WIDER THAN 6 FEET.

SIDEWALK THICKNESS (IN)	SIDEWALK WIDTH (FT)	LONGITUDINAL STEEL			TRANSVERSE STEEL #3 BARS SPACING (IN)
		#3 BARS			
		NO. OF BARS	SPACING (IN)	END BAR SPACING (IN)	
4.5	5	3	27	3	48
4.5	6	4	22	3	48

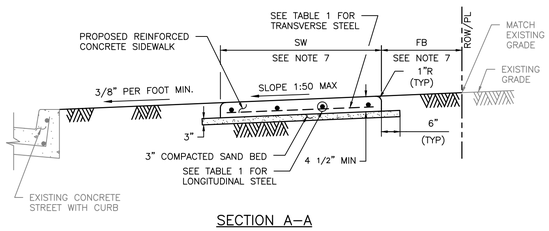

SECTION A-A

NOTES:

1. 6X6 – W2.9XW2.9 WELDED WIRE FABRIC MAY BE USED IN LIEU OF THE REINFORCING STEEL GIVEN IN TABLE 1.
2. REINFORCED CONCRETE SIDEWALKS THRU DRIVEWAYS OPENINGS SHALL BE EITHER 6" THICK OR 7" THICK AS SPECIFIED ON 6" STABILIZED SUBGRADE. FOR THE REINFORCING STEEL REQUIREMENTS, SEE CITY OF HOUSTON STANDARD DETAILS 02754-01A, 02754-01B, 02754-03, AND 02754-04.
3. MAXIMUM SPACING FOR EXPANSION JOINTS SHALL BE 40 FEET.
4. CONTRACTOR SHALL CONSTRUCT SIDEWALK IN A MANNER NOT TO BLOCK THE NATURAL DRAINAGE FROM ADJACENT PROPERTY.
5. ALL RAMPS AND SIDEWALKS/WALKWAYS SHALL BE CONSTRUCTED IN ACCORDANCE WITH HOUSTON PUBLIC WORKS STANDARDS, TEXAS ACCESSIBILITY STANDARDS (TAS) AND AMERICANS WITH DISABILITIES ACT (ADA) REQUIREMENTS. IF THERE IS A CONFLICT IN THE REQUIREMENTS, THE STRICTEST REQUIREMENTS SHALL GOVERN.
6. CURB RAMPS THAT ARE STEEPER THAN A 1:12 MAX SLOPE WILL NOT BE ACCEPTED BY THE CITY OF HOUSTON UNLESS NOTED OTHERWISE.
7. REFER TO CONTRACT DRAWINGS FOR SIDEWALK (SW), FRONTAGE BUFFER (FB), AND SAFETY BUFFER (SB) WIDTHS.

CITY OF HOUSTON
HOUSTON PUBLIC WORKS STANDARD

TYPICAL SIDEWALK LAYOUT AND DETAILS FOR STREETS WITH CURBS
(SCALE: NOT TO SCALE)

DocuSigned by: Sukut Kanwar — CITY ENGINEER	DocuSigned by: Carol Haddock — DIRECTOR OF HPW
DocuSigned by: KHANG NGUYEN — CITY TRAFFIC ENGINEER	
EFF DATE: NOV-27-2023	DWG NO: 02775-01

IDS Engineering Group
13430 NW. Freeway, Suite 700
Houston, Tx. 77040
713.462.3178
TxEng Firm 2726 | TxSurv Firm 10110700

SURVEYED BY: KUO & ASSOCIATES, INC.
TBPE FIRM #F-4578; TBPLS FIRM #1007560

THIS DOCUMENT IS RELEASED FOR THE PURPOSE OF REVIEW UNDER THE AUTHORITY OF MARCEL KHOUW, P.E. 101807 ON 05/27/2026. IT IS NOT TO BE USED FOR CONSTRUCTION PURPOSES.

CITY OF HOUSTON
HOUSTON PUBLIC WORKS

LIFT STATION RENEWAL AND REPLACEMENT FY 2023

TYPICAL SIDEWALK LAYOUT AND DETAILS FOR STREETS WITH CURBS

WBS NUMBER	FOR CITY OF HOUSTON USE ONLY
R-000267-0179-4	
DRAWING SCALE	
HORIZ: N.T.S. VERT: N/A	
CITY OF HOUSTON PM	
NAWARAJ PANTA, P.E.	
DWG. NO. C-16	SHEET NO. 325 OF 361

NO.	DATE	REVISION	APP.

DISCLAIMER:
THE USE OF THIS STANDARD IS GOVERNED BY THE TEXAS ENGINEERING PRACTICE ACT. THE DESIGN REQUIREMENTS ON THIS STANDARD DO NOT PURPORT TO ADDRESS ALL OF THE SAFETY CONCERNS ASSOCIATED WITH THEIR USE. THE ENGINEER OF RECORD (EOR) IS TO REVIEW THESE DESIGN REQUIREMENTS AND BY AUTHORING THEIR USE, MAKE BY THE CITY OF HOUSTON FOR ANY PURPOSES WHATSOEVER. THE CITY OF HOUSTON DOES NOT ACCEPT RESPONSIBILITY FOR THESE APPLICATIONS, ADEQUACY AND SAFETY OF THE DESIGN, AND ASSUMES NO LIABILITY FOR ANY INJURY, DAMAGE OR LOSS RESULTING FROM THE USE OF THIS STANDARD. THE EOR ASSUMES ALL RESPONSIBILITY FOR THE USE OF THIS STANDARD AND AGREES TO INDEMNIFY AND HOLD HARMLESS THE CITY OF HOUSTON FOR ANY AND ALL LIABILITY ARISING OUT OF THE USE OF THIS STANDARD.

FILE PATH: \\dseg.com\FS\Projects\0000\005708500 CoH Lift Stations - FY 2023\CAD\DWG\PRODUCTION\325-SIDEWALK DETAILS.dwg

FILE PATH: \\dseg.com\FS\Projects\0000\005708500 CoH Lift Stations - FY 2023\CAD\DWG\PRODUCTION\325-SIDEWALK DETAILS.dwg

PLOTTED: 5/13/2026 6:50 PM

NOTES:

1. ADJUSTABLE PIPE SUPPORT ASSEMBLY TO BE 316SS.
2. PROVIDE MEANS OF PREVENTING DISSIMILAR METAL CONTACT.

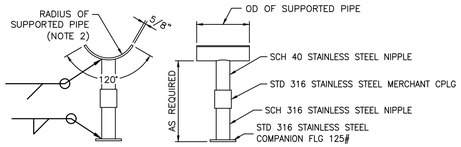

1	TYPICAL ADJUSTABLE PIPE SUPPORT	Scale: N.T.S.
		File:

NOTES:

1. ADJUSTABLE PIPE SUPPORT ASSEMBLY TO BE 316SS.
2. PROVIDE MEANS OF PREVENTING DISSIMILAR METAL CONTACT.

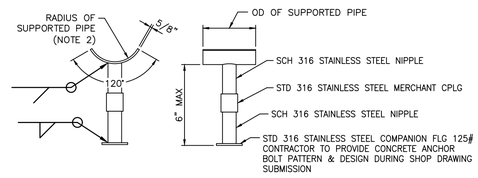

FOR USE WITH CONCRETE PIPE SUPPORT PIER

1A	TYPICAL ADJUSTABLE PIPE SUPPORT	Scale: N.T.S.
		File:

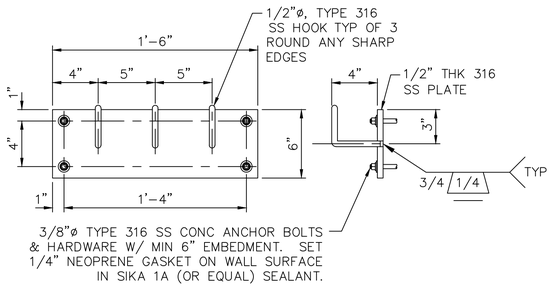

2	TYPICAL CABLE HOLDER ASSEMBLY	Scale: N.T.S.
		File:

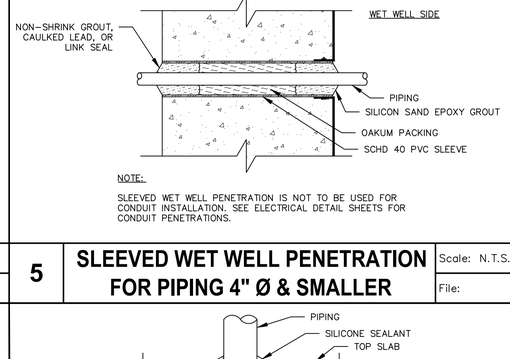

NOTE:

SLEEVED WET WELL PENETRATION IS NOT TO BE USED FOR CONDUIT INSTALLATION. SEE ELECTRICAL DETAIL SHEETS FOR CONDUIT PENETRATIONS.

5	SLEEVED WET WELL PENETRATION FOR PIPING 4" Ø & SMALLER	Scale: N.T.S.
		File:

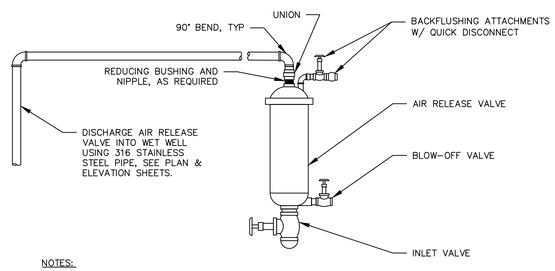

NOTES:

1. ALL PROPOSED MATERIALS SHALL BE 316 STAINLESS STEEL UNLESS NOTED OTHERWISE.
2. ISOLATE DISSIMILAR MATERIALS WITH INSULATING KITS.

3	TYPICAL AIR RELEASE VALVE ASSEMBLY	Scale: N.T.S.
		File:

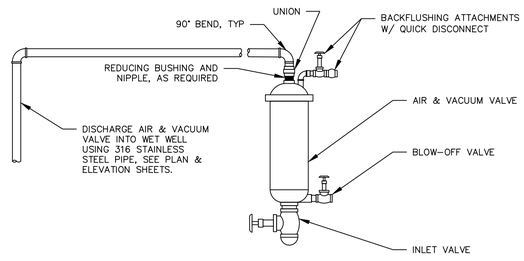

NOTES:

1. ALL PROPOSED MATERIALS SHALL BE 316 STAINLESS STEEL UNLESS NOTED OTHERWISE.
2. ISOLATE DISSIMILAR MATERIALS WITH INSULATING KITS.

4	TYPICAL AIR AND VACUUM VALVE ASSEMBLY	Scale: N.T.S.
		File:

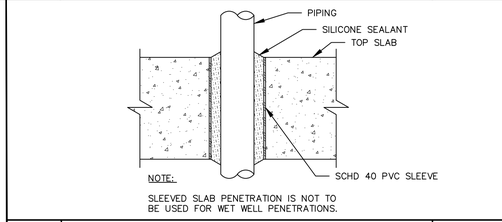

NOTE:

SLEEVED SLAB PENETRATION IS NOT TO BE USED FOR WET WELL PENETRATIONS.

6	SLEEVED SLAB PENETRATION	Scale: N.T.S.
		File:

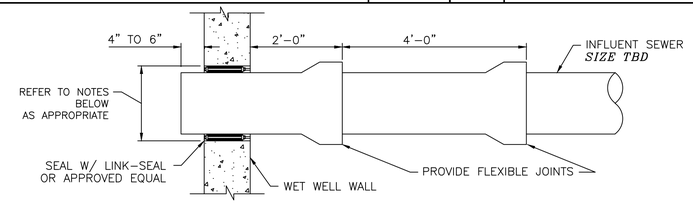

FOR OPENINGS TO BE CORED (CAISSON CONSTRUCTION):

1. IDENTIFY PIPE PENETRATION LOCATION WITH 1" DIA PLASTIC PIPE SLEEVE.
2. DIAMETER OF PENETRATION OEPNING SHALL BE EQUAL TO PIPE OUTER DIAMETER PLUS 2 TIME LINK-SEAL THICKNESS.
3. PROVIDE ADDITIONAL REINFORCEMENT AROUND PENETRATION OPENING AS PER DRAWINGS ZOS03 BEFORE CASTING WALL.

FOR OPENINGS TO BE SLEEVED OR FORMED (CAISSON CONSTRUCTION):

1. IDENTIFY PIPE PENETRATION LOCATION.
2. DIAMETER OF PENETRATION OPENING SHALL BE EQUAL TO PIPE OUTER DIAMETER PLUS 2 TIMES LINK-SEAL THICKNESS. SEE "TYPICAL PIPE BLOCK-OUT DETAIL FOR CAISSON CONSTRUCTION," THIS SHEET.
3. PROVIDE ADDITIONAL REINFORCEMENT AROUND PENETRATION OPENING AS PER DRAWING ZOS03 BEFORE CASTING WALL.

FOR OPENINGS TO BE FORMED OR SLEEVED (OPEN CUT CONSTRUCTION):

1. IDENTIFY PIPE PENETRATION LOCATION.
2. DIAMETER OF PENETRATION OPENING SHALL BE EQUAL TO PIPE OUTER DIAMETER PLUS 2 TIMES LINK-SEAL THICKNESS.
3. PROVIDE ADDITIONAL REINFORCEMENT AROUND PENETRATION OPENING AS PER DRAWING ZOS03 BEFORE CASTING WALL.

TYP INFLUENT SEWER ENTRY DETAIL

7	TYPICAL INFLUENT SEWER ENTRY DETAIL	Scale: N.T.S.
		File:

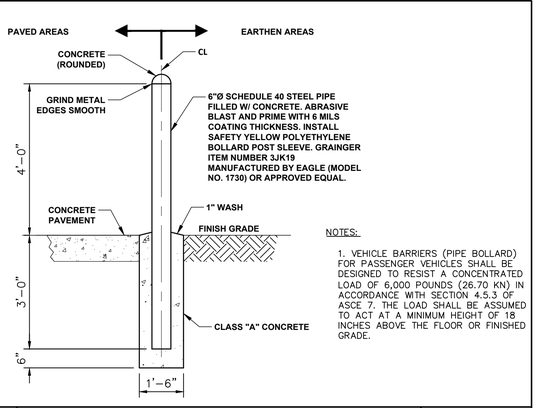

NOTES:

1. VEHICLE BARRIERS (PIPE BOLLARD) FOR PASSENGER VEHICLES SHALL BE DESIGNED TO RESIST A CONCENTRATED LOAD OF 6,000 POUNDS (26.70 KN) IN ACCORDANCE WITH SECTION 4.5.3 OF ASCE 7. THE LOAD SHALL BE ASSUMED TO ACT AT A MINIMUM HEIGHT OF 18 INCHES ABOVE THE FLOOR OR FINISHED GRADE.

8	PIPE BOLLARD DETAIL	Scale: N.T.S.
		File:

NOTES:

1. PROVIDE WARNING SIGN WHEN HOSE BIBB IS USED FOR POTABLE WATER.

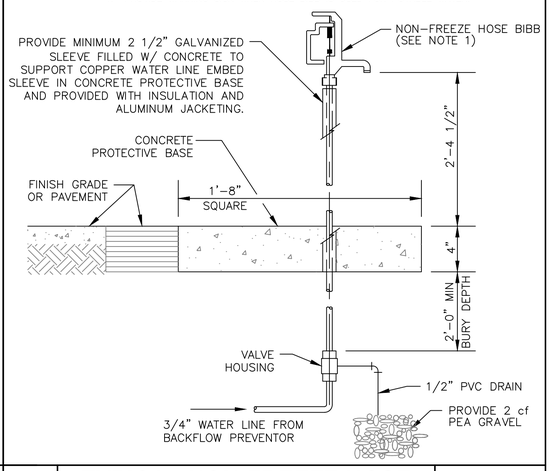

9	TYPICAL NON-FREEZE HOSE BIBB DETAIL	Scale: N.T.S.
		File:

NO.	DATE	REVISION	APP.

IDS Engineering Group
13430 NW. Freeway, Suite 700
Houston, Tx. 77040
713.462.3178
TxEng Firm 2726 | TxSurv Firm 10110700

SURVEYED BY: KUO & ASSOCIATES, INC.
TBPE FIRM #F-4578; TBPLS FIRM #1007560

THIS DOCUMENT IS RELEASED FOR THE PURPOSE OF REVIEW UNDER THE AUTHORITY OF MARCEL KHOUW, P.E. 101807 ON 05/27/2026. IT IS NOT TO BE USED FOR CONSTRUCTION PURPOSES.

CITY OF HOUSTON
HOUSTON PUBLIC WORKS

LIFT STATION RENEWAL AND REPLACEMENT FY 2023

TYPICAL DETAILS – CIVIL (SHEET 1 OF 4)

WBS NUMBER	FOR CITY OF HOUSTON USE ONLY
R-000267-0179-4	
DRAWING SCALE	
HORIZ: N.T.S. VERT: N/A	
CITY OF HOUSTON PM	
NAWARAJ PANTA, P.E.	
DWG. NO. C-17	SHEET NO. 326 OF 361

FILE PATH: \\idseg.com\FS\Projects\0000\005708500 CoH Lift Stations - FY 2023\CAD\DWG\PRODUCTION\326-CIVIL DETAILS.dwg

PLOTTED: 5/13/2026 6:50 PM

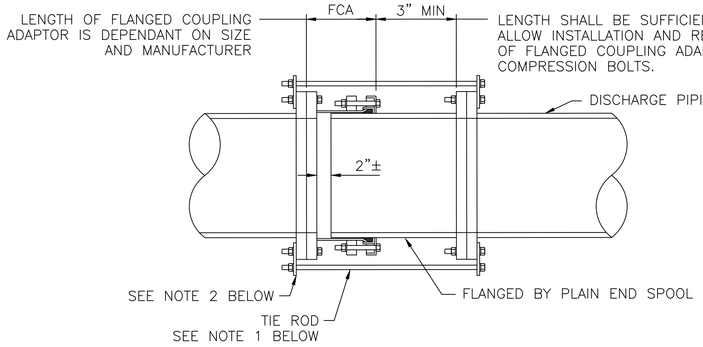

NOTES:

1. PROVIDE A NUMBER OF TIE RODS EQUAL TO 1/2 THE NUMBER OF FLANGE BOLTS. EVENLY SPACE INSTALLATION OF TIE RODS. DIAMETER OF TIE RODS TO BE EQUAL TO THE DIAMETER OF FLANGE BOLTS. LENGTH OF TIE RODS TO BE DETERMINED BY CONTRACTOR BASED ON SIZE AND MANUFACTURER OF FLANGED COUPLING ADAPTOR AND FINAL LENGTH OF SPOOL PIECE.
2. PROVIDE 316 SS TAB FOR ATTACHMENT OF TIE RODS. SIZE TO BE DETERMINED BY CONTRACTOR.
3. CONTRACTOR TO SUBMIT DETAILS DURING SHOP DRAWING SUBMISSION.
4. ALL HARDWARE SHALL BE 316 STAINLESS STEEL. TIE RODS SHOULD BE THREADED.
5. THIS RESTRAINT DOES NOT REPLACE THRUST BLOCKS TO BE PROVIDED AT OTHER LOCATIONS.

1	TYPICAL FLANGED COUPLING ADAPTOR RESTRAINT DETAIL	Scale: N.T.S.
		File:

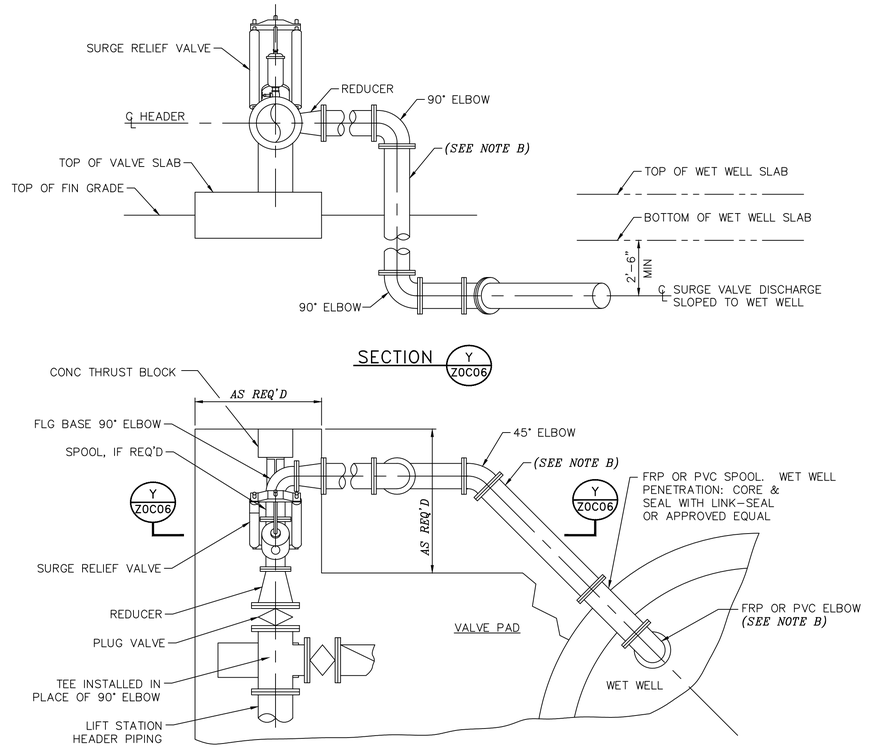

2	TYPICAL SURGE RELIEF VALVE FOR STATIONS WITHOUT VALVE VAULT	Scale: N.T.S.
		File:

LIFT STATION	MAX PRESSURE (PSI)
LOCKWOOD	41
SOUTH POINT	39
SCOTT #3 DRY WEATHER	41
SCOTT #3 WET WEATHER	74
MARKET ST. #2	37
MUD #67	20
WOODFOREST	80

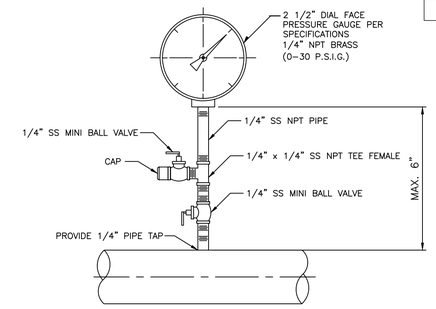

NOTE:

1. ALL FITTINGS SHALL BE STAINLESS STEEL (316).

3	PRESSURE GAUGE DETAIL	Scale: N.T.S.
		File:

NO.	DATE	REVISION	APP.

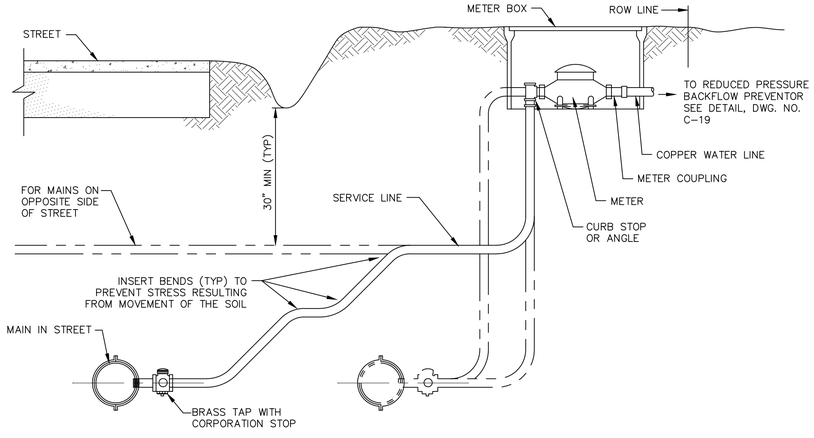

4	TYPICAL WATER SERVICE LINE SECTION & METER SET DETAIL	Scale: N.T.S.
		File:

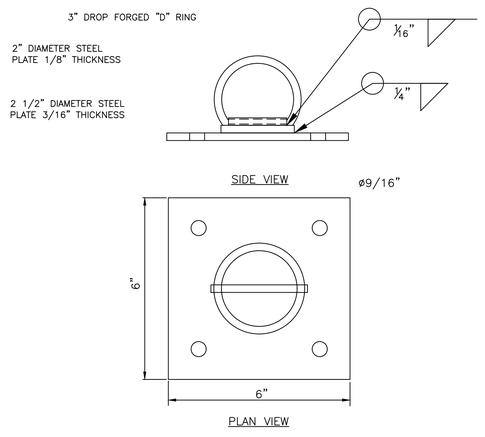

NOTES:

STEEL BASE PLATE SHALL BE ¼" HOT ROLLED STEEL PLATE THAT MEETS ASTM A-570 SPECIFICATIONS.

2 ½" DIAMETER STEEL PLATE, 3/16" THICK ATTACHED TO BASE PLATE USING ¼" FILLET WELD.

2" DIAMETER FORMED STEEL PLATE, ⅛" THICK USED TO ATTACHED "D" RING TO THE 2 ½" DIAMETER STEEL PLATE USING A 5/16" FILLET WELD.

BASE PLATE CAN BE BOLTED TO CONCRETE, STEEL, OR WOOD AS NEEDED PER APPLICATION.

ANCHOR BOLTS SHALL BE ½" DIAMETER ANCHOR BOLTS.

ANCHOR BOLTS SHALL SUSTAIN A MINIMUM ULTIMATE PULL-OUT LOAD OF AT LEAST 6,000 POUNDS.

WELDING SHALL BE PERFORMED BY A CERTIFIED WELDER USING E-70XX ROD OR WIRE FEED.

5	CB SERIES FALL PROTECTION CB-1B BOLT ANCHORED	Scale: N.T.S.
		File:

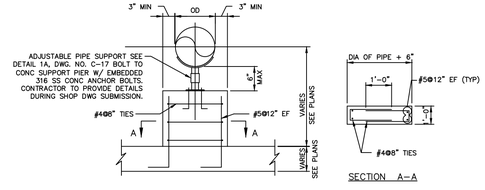

NOTES:

1. CONCRETE SUPPORT PIER IS NOT A THRUST BLOCK AND IS NOT INTENDED TO REPLACE THRUST BLOCK PROVIDED AT OTHER LOCATIONS.
2. PLACE SUPPORT PIER APPROX 9" TO 24" FROM CHECK VALVE, SEE CIVIL DRAWINGS. DO NOT PLACE SUPPORT PIER ON TOP OF EXPANSION JOINT.
3. PROVIDE CONCRETE PIPE SUPPORT PIER FOR ALL VALVES 14" AND LARGER.

6	TYPICAL CONCRETE PIPE SUPPORT PIER DETAIL	Scale: N.T.S.
		File:

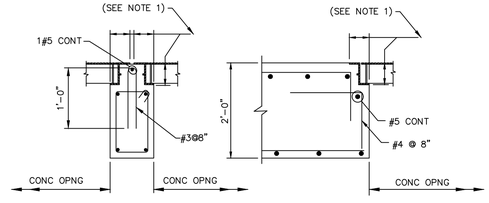

NOTE:

1. CONTRACTOR TO CONSULT HATCH MANUFACTURER'S DRAWINGS FOR DOOR FRAME DETAILS.

7	TYPICAL HATCH FRAME SECTIONS	Scale: N.T.S.
		File:

IDS Engineering Group
13430 NW. Freeway, Suite 700
Houston, Tx. 77040
713.462.3178
TxEng Firm 2726 | TxSurv Firm 10110700

SURVEYED BY: KUO & ASSOCIATES, INC.
TBPE FIRM #F-4578; TBPLS FIRM #1007560

THIS DOCUMENT IS RELEASED FOR THE PURPOSE OF REVIEW UNDER THE AUTHORITY OF MARCEL KHOUW, P.E. 101807 ON 05/27/2026. IT IS NOT TO BE USED FOR CONSTRUCTION PURPOSES.

CITY OF HOUSTON
HOUSTON PUBLIC WORKS

LIFT STATION RENEWAL AND REPLACEMENT FY 2023

TYPICAL DETAILS – CIVIL (SHEET 2 OF 4)

WBS NUMBER	FOR CITY OF HOUSTON USE ONLY
R-000267-0179-4	
DRAWING SCALE	
HORIZ: N.T.S. VERT: N/A	
CITY OF HOUSTON PM	
NAWARAJ PANTA, P.E.	
DWG. NO. C-18	SHEET NO. 327 OF 361

FILE PATH: \\idseg.com\FS\Projects\0000\005708500 CoH Lift Stations - FY 2023\CAD\DWG\PRODUCTION\327-CIVIL DETAILS.dwg

PLOTTED: 5/13/2026 6:50 PM

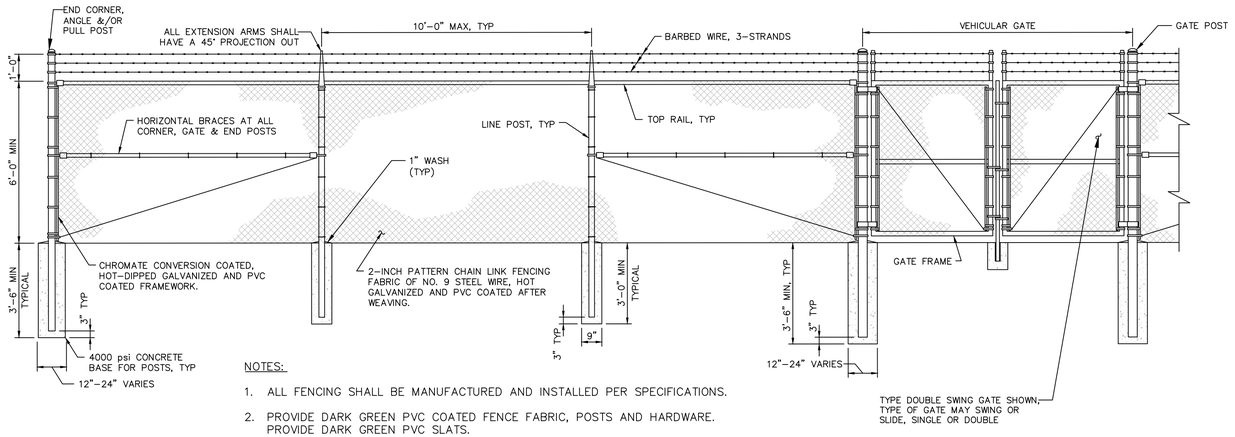

NOTES:

1. ALL FENCING SHALL BE MANUFACTURED AND INSTALLED PER SPECIFICATIONS.
2. PROVIDE DARK GREEN PVC COATED FENCE FABRIC, POSTS AND HARDWARE. PROVIDE DARK GREEN PVC SLATS.

1 **GENERAL SITE FENCING** — Scale: N.T.S. — File:

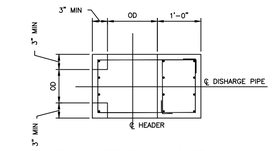

PLAN – THRUST BLOCK @ TEE

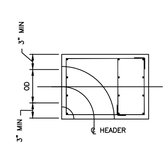

PLAN – THRUST BLOCK @ ELBOW

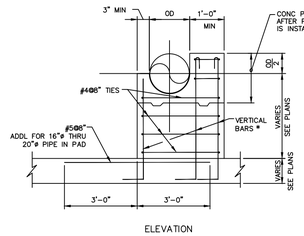

ELEVATION

*VERTICAL BARS

PIPE DIA	NO. OF VERT BARS
4" – 8"	3 – 2#5
10" – 12"	3 – 3#5
14" – 16"	3 – 4#5
18" – 20"	3 – 4#5

2 **TYPICAL THRUST BLOCK DETAILS** — Scale: N.T.S. — File:

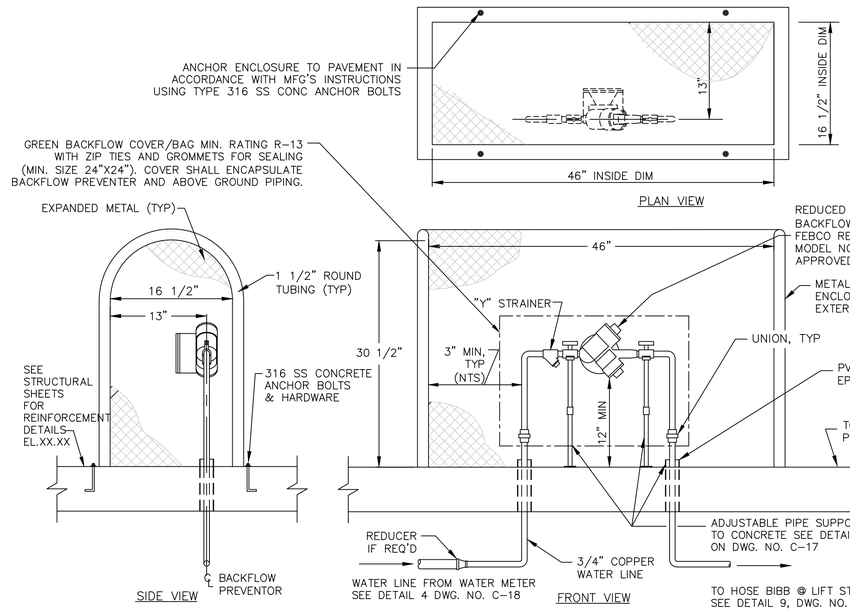

3 **OPEN CAGE REDUCED PRESSURE BACKFLOW PREVENTER INSTALLATION** — Scale: N.T.S. — File:

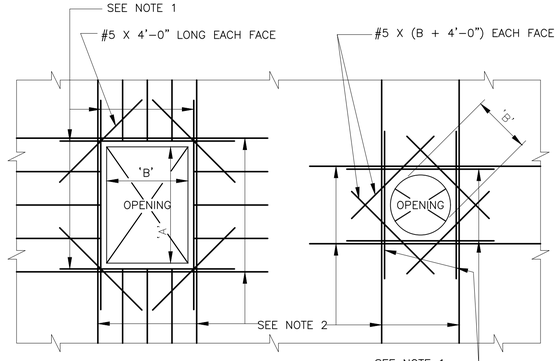

ADDL REINFORCING NOTES:

1. PROVIDE 2–#6 X (B+4'–0") ADDITIONAL REBARS @ TOP AND BOTTOM AND 2–#6 X (A+4'–0") ADDITIONAL REBARS AT EACH SIDE OF OPENING IN WALLS ONLY.
2. PROVIDE ADDL BARS EQUAL TO ONE–HALF OF BARS INTERRUPTED AT EACH SIDE OF OPENING AT 3" C/C. THESE BARS SHALL BE ORIGINAL SIZES AND LENGTHS AS THOSE OF THE INTERRUPTED BARS. (TYPICAL FOR OPENINGS IN SLABS AND PRESSURE WALLS.)

4 **ADDITIONAL REINFORCING STEEL AT OPENINGS IN WALLS & SLABS** — Scale: N.T.S. — File:

NO.	DATE	REVISION	APP.

IDS Engineering Group
13430 NW. Freeway, Suite 700
Houston, Tx. 77040
713.462.3178
TxEng Firm 2726 | TxSurv Firm 10110700

SURVEYED BY: KUO & ASSOCIATES, INC.
TBPE FIRM #F-4578; TBPLS FIRM #1007560

THIS DOCUMENT IS RELEASED FOR THE PURPOSE OF REVIEW UNDER THE AUTHORITY OF MARCEL KHOUW, P.E. 101807 ON 05/27/2026. IT IS NOT TO BE USED FOR CONSTRUCTION PURPOSES.

CITY OF HOUSTON
HOUSTON PUBLIC WORKS

LIFT STATION RENEWAL AND REPLACEMENT FY 2023

TYPICAL DETAILS – CIVIL (SHEET 3 OF 4)

WBS NUMBER	FOR CITY OF HOUSTON USE ONLY
R-000267-0179-4	
DRAWING SCALE	
HORIZ: N.T.S. VERT: N/A	
CITY OF HOUSTON PM	
NAWARAJ PANTA, P.E.	
SHEET NO. 328 OF 361	

DWG. NO. C-19

FILE PATH: \\idseg.com\FS\Projects\0000\005708500 CoH Lift Stations - FY 2023\CAD\DWG\PRODUCTION\328-CIVIL DETAILS.dwg

PLOTTED: 5/13/2026 6:50 PM

NO.	DATE	REVISION	APP.

MANHOLE SIZE *(NOTE B)*	
FORCEMAIN DIAMETER	MANHOLE DIAMETER
8"	4'–0"
18"	5'–0"
30"	8'–0"

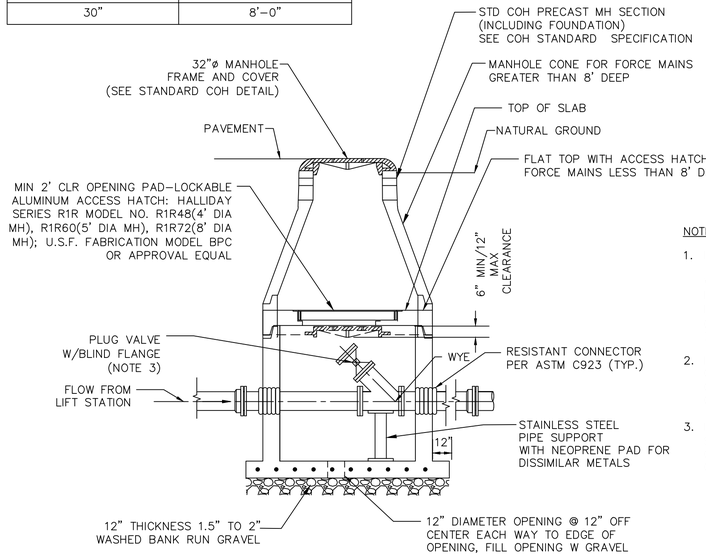

NOTES:

1. PROVIDE LINED DUCTILE IRON PIPE, THICK, CLASS 53, FOR FORCE MAIN WITHIN 12" OF OUTSIDE FACE OF MANHOLE. JOINTS WITHIN MANHOLE MAY BE FLANGED (AS SHOWN OR GROOVED (PER ASTM 606) WITHIN MANHOLE, WITH 316 STAINLESS STEEL BOLTS.
2. MANHOLE TOP MAY BE CONCENTRIC CONE, OR FLAT TOP WITH ECCENTRIC OPENING. PROVIDE 32" FRAME AND COVER.
3. ENSURE MIN CLEARANCE OF 18" ON ALL SIDES. OFFSET VALVE ON HATCH/MH OPENING AS NEEDED TO OBTAIN CLEARANCE.

BELOW GROUND BYPASS DETAIL

BYPASS MANHOLE DETAIL
SCALE: NONE
Z0C12

1	BYPASS MANHOLE DETAIL	Scale: N.T.S.
		File:

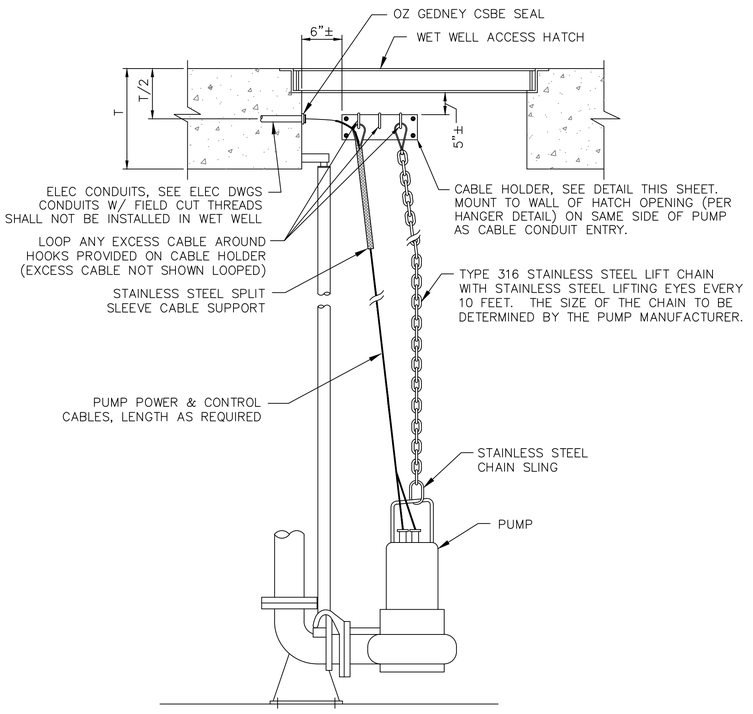

2	TYPICAL PUMP LIFTING AND CABLE DETAIL	Scale: N.T.S.
		File:

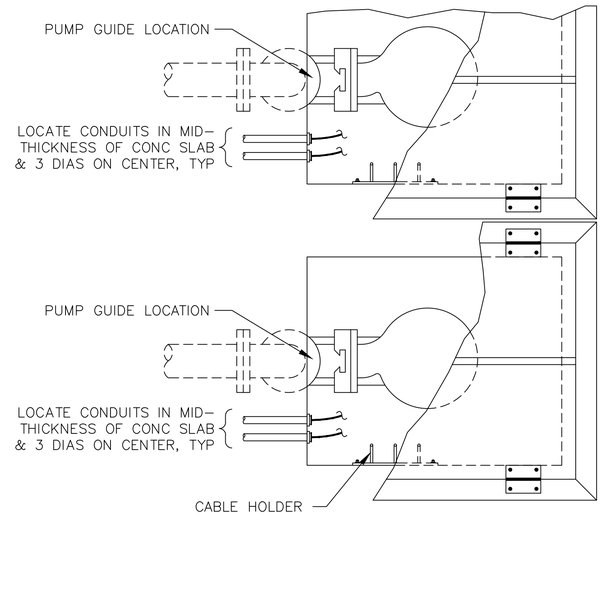

3	TYPICAL PUMP LIFTING AND CABLE DETAIL	Scale: N.T.S.
		File:

IDS Engineering Group
13430 NW. Freeway, Suite 700
Houston, Tx. 77040
713.462.3178
TxEng Firm 2726 | TxSurv Firm 10110700

SURVEYED BY: KUO & ASSOCIATES, INC.
TBPE FIRM #F-4578; TBPLS FIRM #1007560

THIS DOCUMENT IS RELEASED FOR THE PURPOSE OF REVIEW UNDER THE AUTHORITY OF MARCEL KHOUW, P.E. 101807 ON 05/27/2026. IT IS NOT TO BE USED FOR CONSTRUCTION PURPOSES.

CITY OF HOUSTON
HOUSTON PUBLIC WORKS

LIFT STATION RENEWAL AND REPLACEMENT FY 2023

TYPICAL DETAILS – CIVIL (SHEET 4 OF 4)

WBS NUMBER	FOR CITY OF HOUSTON USE ONLY
R–000267–0179–4	
DRAWING SCALE	
HORIZ: N.T.S. VERT: N/A	
CITY OF HOUSTON PM	
NAWARAJ PANTA, P.E.	
DWG. NO. C–20	SHEET NO. 329 OF 361

FILE PATH: \\idseg.com\FS\Projects\0000\005708500 CoH Lift Stations – FY 2023\CAD\DWG\PRODUCTION\329–CIVIL DETAILS.dwg

PLOTTED: 5/13/2026 6:50 PM

FILE PATH: \\idseg.com\FS\Projects\0000\005708500 CoH Lift Stations - FY 2023\CAD\DWG\PRODUCTION\330-DISCHARGE PIPING SUPPORT DTLS.dwg

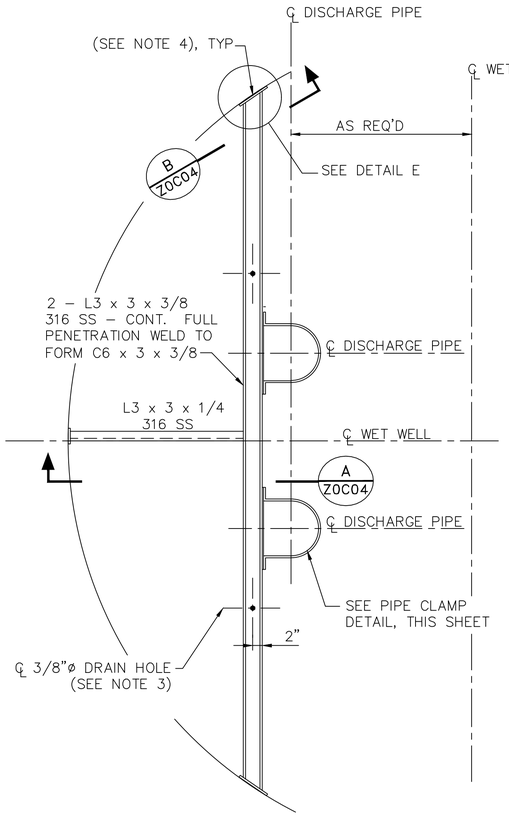

TYP DISCHARGE PIPING SUPPORT
PLAN FOR 2 PUMPS

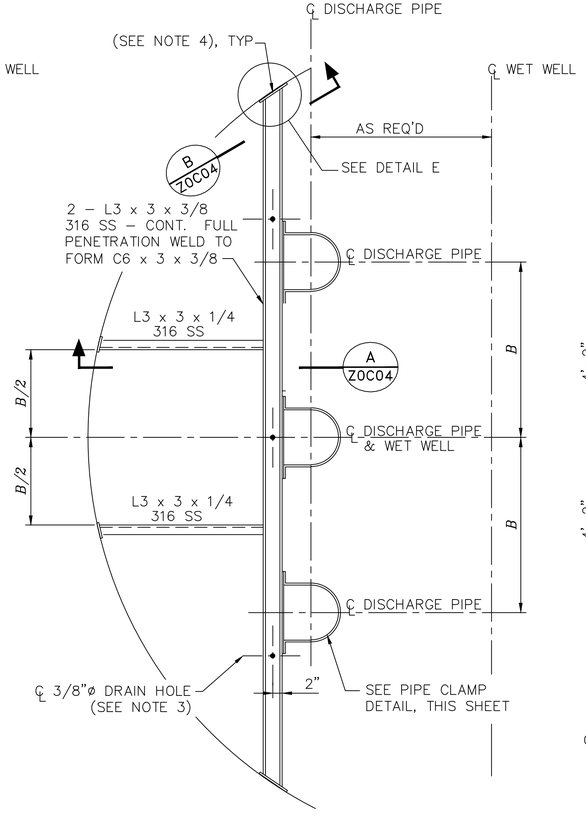

TYP DISCHARGE PIPING SUPPORT
PLAN FOR 3 PUMPS

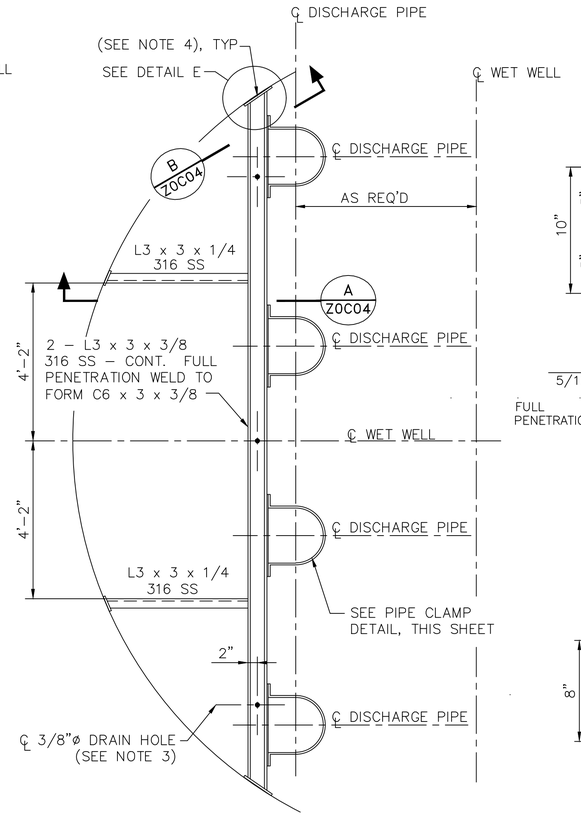

TYP DISCHARGE PIPING SUPPORT
PLAN FOR 4 PUMPS

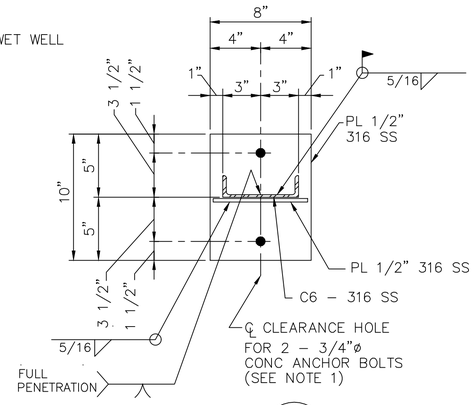

SECTION B Z0C04

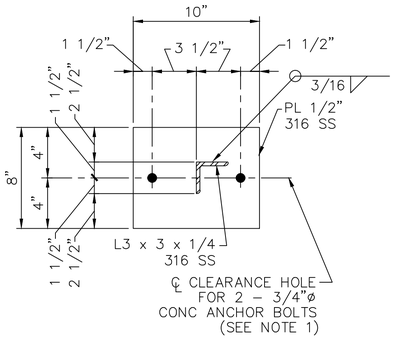

SECTION C Z0C04

NOTES:

1. CONCRETE ANCHOR BOLTS SHALL HAVE 6" MINIMUM EMBEDMENT AND SHALL BE TYPE 316 STAINLESS STEEL, PER SPECIFICATIONS.
2. SEE STATION AND STRUCTURAL DRAWINGS FOR DIMENSIONS AND INFORMATION NOT SHOWN.
3. DRILL 3/8"ø HOLES, 1" OFF C OF C6 AT MIDSPAN BETWEEN LATERAL PIPE SUPPORTS TO ALLOW FOR DRAINAGE. 3 HOLES PER CHANNEL WHERE 2 LATERAL SUPPORTS REQUIRED; 2 HOLES PER CHANNEL WHERE 1 LATERAL SUPPORT REQUIRED.
4. SET 1/4" NEOPRENE GASKET ON WALL SURFACE IN SIKA 1A (OR EQUAL) SEALANT.

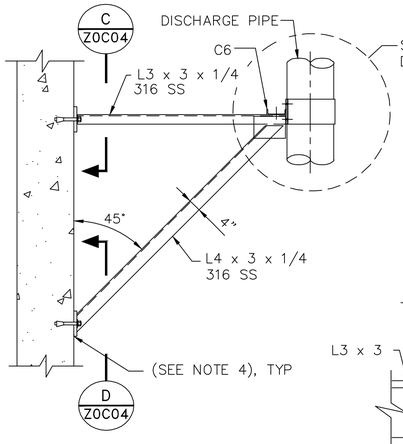

TYP LATERAL PIPE SUPPORT FRAME

SECTION A Z0C04

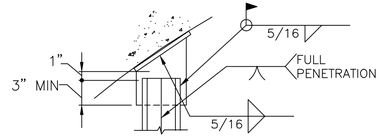

DETAIL E

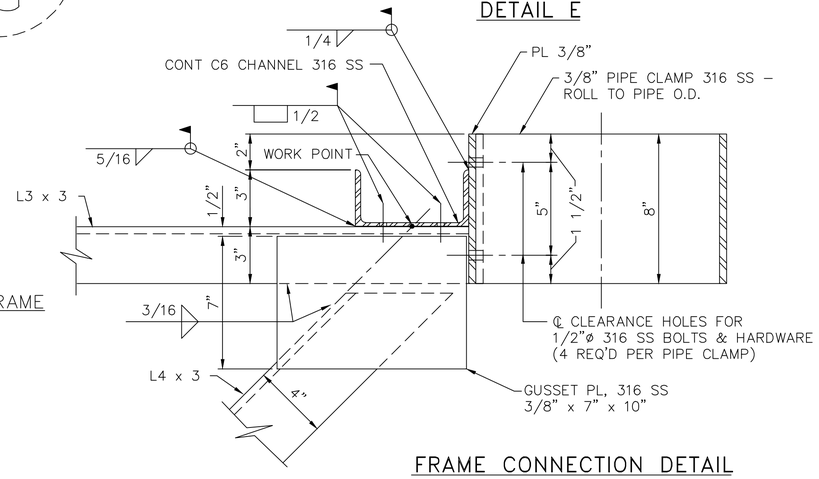

FRAME CONNECTION DETAIL

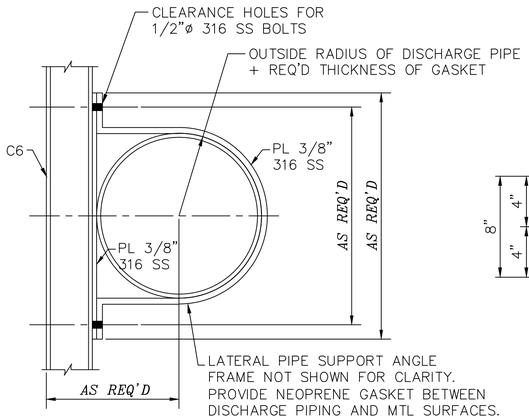

PIPE CLAMP DETAIL

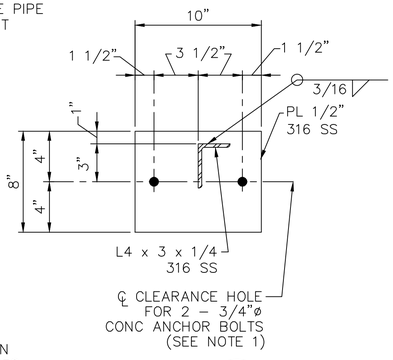

SECTION D Z0C04

NO.	DATE	REVISION	APP.

IDS Engineering Group
13430 NW. Freeway, Suite 700
Houston, Tx. 77040
713.462.3178
TxEng Firm 2726 | TxSurv Firm 10110700

SURVEYED BY: KUO & ASSOCIATES, INC.
TBPE FIRM #F-4578; TBPLS FIRM #1007560

THIS DOCUMENT IS RELEASED FOR THE PURPOSE OF REVIEW UNDER THE AUTHORITY OF MARCEL KHOUW, P.E. 101807 ON 05/27/2026. IT IS NOT TO BE USED FOR CONSTRUCTION PURPOSES.

CITY OF HOUSTON
HOUSTON PUBLIC WORKS

LIFT STATION RENEWAL AND REPLACEMENT FY 2023

DISCHARGE PIPING SUPPORT DETAILS

WBS NUMBER	FOR CITY OF HOUSTON USE ONLY
R-000267-0179-4	
DRAWING SCALE	
HORIZ: N.T.S. VERT: N/A	
CITY OF HOUSTON PM	
NAWARAJ PANTA, P.E.	

DWG. NO.	SHEET NO. 330 OF 361
C-21	

PLOTTED: 5/13/2026 6:51 PM

NO.	DATE	REVISION	APP.

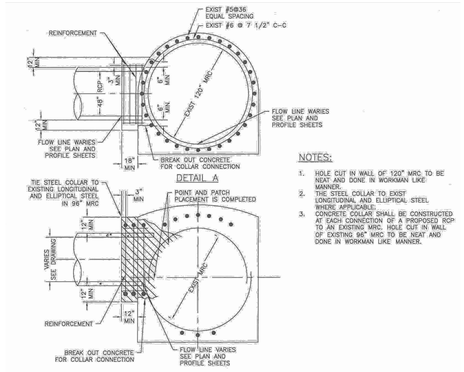

NOTES:

1. HOLE CUT IN WALL OF 120° MRC TO BE NEAT AND DONE IN WORKMAN LIKE MANNER.
2. THE STEEL COLLAR TO EXIST LONGITUDINAL AND ELLIPTICAL STEEL WHERE APPLICABLE.
3. CONCRETE COLLAR SHALL BE CONSTRUCTED AT EACH CONNECTION OF A PROPOSED RCP TO AN EXISTING MRC. HOLE CUT IN WALL OF EXISTING 96" MRC TO BE NEAT AND DONE IN WORKMAN LIKE MANNER.

CONCRETE COLLAR DETAIL

LATERAL CONNECTION TO EXISTING MONOLITHIC REINFORCED CONCRETE STORM SEWER
N.T.S.

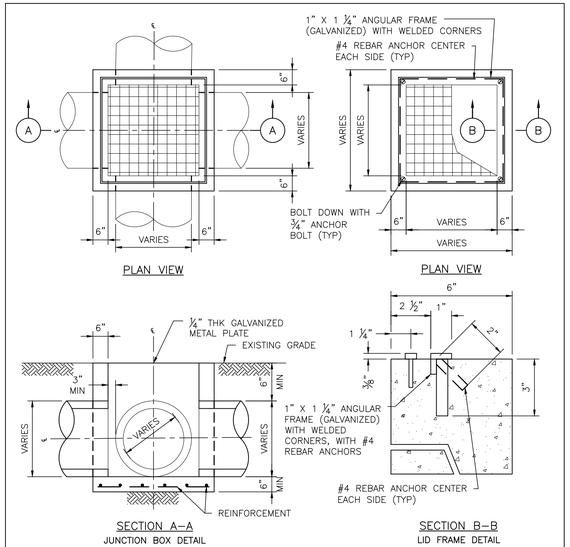

NOTES:

1. DETAIL TO BE USED WHERE STORM SEWER SIZE IS 24" DIA OR LESS.
2. FOR SEWER GREATER THAN 24" DIA USE TYPE C MANHOLE.

NOTES TO SPECIFIER:

1. WALL TO BE 6" CONCRETE.
2. NOT TO BE USED IN STREET. FOR AREA BETWEEN CURB AND PROPERTY LINE ONLY.

DISCLAIMER: THE USE OF THIS STANDARD IS GOVERNED BY THE TEXAS ENGINEERING PRACTICE ACT. THE DESIGN REQUIREMENTS ON THIS STANDARD DO NOT PURPORT TO ADDRESS ALL OF THE SAFETY CONCERNS ASSOCIATED WITH THEIR USE. THE ENGINEER OF RECORD (EOR) IS TO REVIEW THESE DESIGN REQUIREMENTS AND BY AUTHORIZING THEIR USE, ACCEPTS RESPONSIBILITY FOR THEIR APPLICABILITY, ADEQUACY AND SAFETY. NO WARRANTY OF ANY KIND IS MADE BY THE CITY OF HOUSTON FOR ANY PURPOSES WHATSOEVER. THE CITY OF HOUSTON ASSUMES NO RESPONSIBILITY FOR INCORRECT RESULTS OR DAMAGES RESULTING FROM ITS USE.

CITY OF HOUSTON
HOUSTON PUBLIC WORKS STANDARD

STORM SEWER JUNCTION BOX WITH LID OR GRATE TOP FOR MAXIMUM OF 24" DIA STORM SEWER

(SCALE: NOT TO SCALE)

APPROVED BY:

CITY ENGINEER	DIRECTOR OF HPW

EFF DATE: | DWG NO:

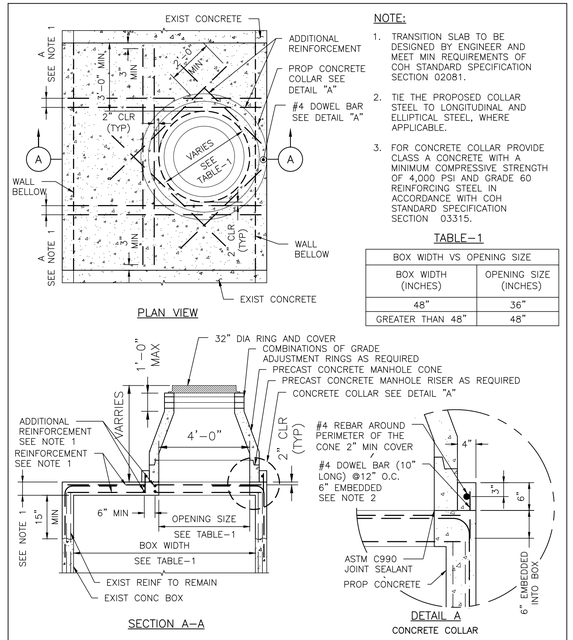

NOTE:

1. TRANSITION SLAB TO BE DESIGNED BY ENGINEER AND MEET MIN REQUIREMENTS OF COH STANDARD SPECIFICATION SECTION 02081.
2. TIE THE PROPOSED COLLAR STEEL TO LONGITUDINAL AND ELLIPTICAL STEEL, WHERE APPLICABLE.
3. FOR CONCRETE COLLAR PROVIDE CLASS A CONCRETE WITH A MINIMUM COMPRESSIVE STRENGTH OF 4,000 PSI AND GRADE 60 REINFORCING STEEL IN ACCORDANCE WITH COH STANDARD SPECIFICATION SECTION 03315.

TABLE–1

BOX WIDTH VS OPENING SIZE	
BOX WIDTH (INCHES)	OPENING SIZE (INCHES)
48"	36"
GREATER THAN 48"	48"

DISCLAIMER: THE USE OF THIS STANDARD IS GOVERNED BY THE TEXAS ENGINEERING PRACTICE ACT. THE DESIGN REQUIREMENTS ON THIS STANDARD DO NOT PURPORT TO ADDRESS ALL OF THE SAFETY CONCERNS ASSOCIATED WITH THEIR USE. THE ENGINEER OF RECORD (EOR) IS TO REVIEW THESE DESIGN REQUIREMENTS AND BY AUTHORIZING THEIR USE, ACCEPTS RESPONSIBILITY FOR THEIR APPLICABILITY, ADEQUACY AND SAFETY. NO WARRANTY OF ANY KIND IS MADE BY THE CITY OF HOUSTON FOR ANY PURPOSES WHATSOEVER. THE CITY OF HOUSTON ASSUMES NO RESPONSIBILITY FOR INCORRECT RESULTS OR DAMAGES RESULTING FROM ITS USE.

CITY OF HOUSTON
HOUSTON PUBLIC WORKS STANDARD

PROPOSED MANHOLE ON EXISTING BOX STORM SEWER

(SCALE: NOT TO SCALE)

APPROVED BY:

CITY ENGINEER	DIRECTOR OF HPW

EFF DATE: MAR–02–2026 | DWG NO: 02082–16

IDS Engineering Group
13430 NW. Freeway, Suite 700
Houston, Tx. 77040
713.462.3178
TxEng Firm 2726 | TxSurv Firm 10110700

SURVEYED BY: KUO & ASSOCIATES, INC.
TBPE FIRM #F–4578; TBPLS FIRM #1007560

THIS DOCUMENT IS RELEASED FOR THE PURPOSE OF REVIEW UNDER THE AUTHORITY OF MARCEL KHOUW, P.E. 101807 ON 05/27/2026. IT IS NOT TO BE USED FOR CONSTRUCTION PURPOSES.

CITY OF HOUSTON
HOUSTON PUBLIC WORKS

LIFT STATION RENEWAL AND REPLACEMENT FY 2023

STORM SEWER DETAILS (SHEET 1 OF 7)

WBS NUMBER	FOR CITY OF HOUSTON USE ONLY
R–000267–0179–4	
DRAWING SCALE	
HORIZ: N.T.S. VERT: N/A	
CITY OF HOUSTON PM	
NAWARAJ PANTA, P.E.	
SHEET NO. 331 OF 361	

DWG. NO.
C–22

FILE PATH: \\tdseg.com\FS\Projects\0000\005708500 CoH Lift Stations - FY 2023\CAD\DWG\PRODUCTION\331-STORM SWR DTLS.dwg

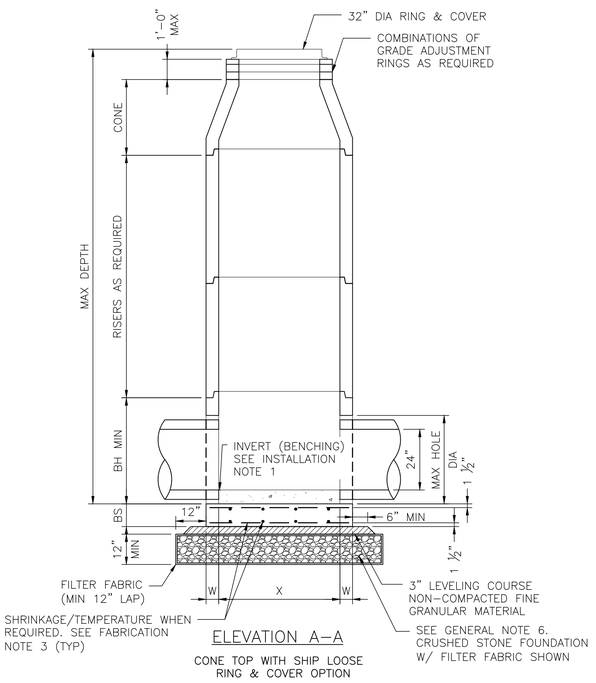

ELEVATION A–A

CONE TOP WITH SHIP LOOSE RING & COVER OPTION

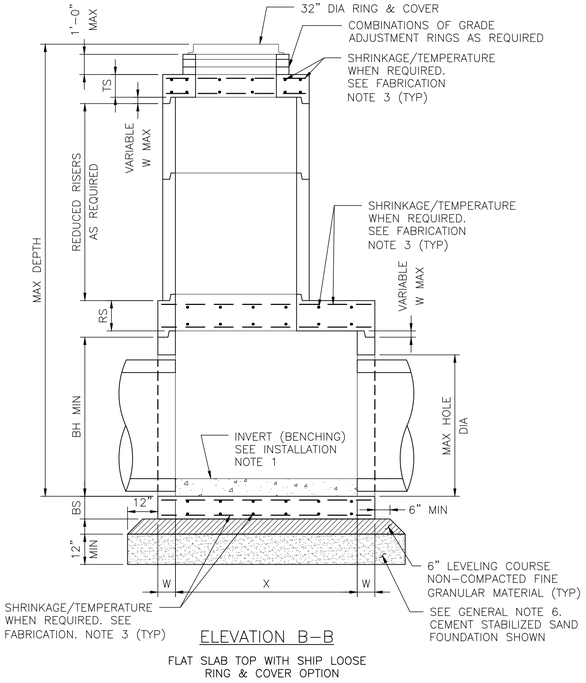

ELEVATION B–B

FLAT SLAB TOP WITH SHIP LOOSE RING & COVER OPTION

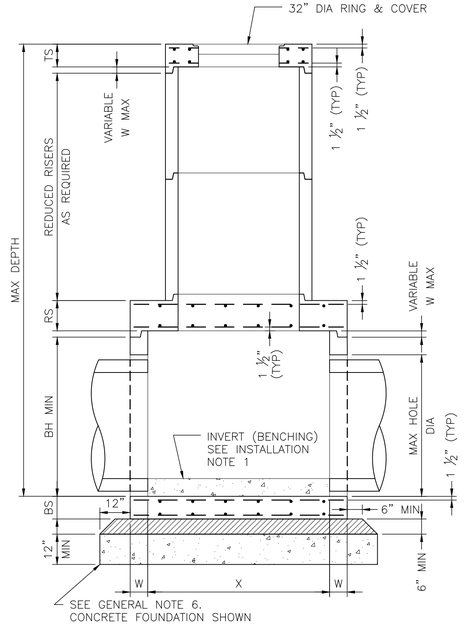

ELEVATION C–C

FLAT SLAB TOP WITH INVERTED RING & COVER OPTION

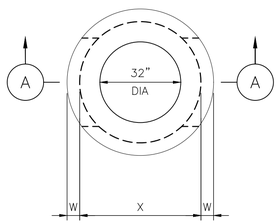

PLAN VIEW A

COVER NOT SHOWN

4–FT DIA MANHOLE

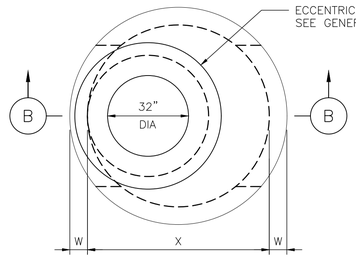

PLAN VIEW B

COVER NOT SHOWN

5–FT & 6–FT DIA MANHOLE

ECCENTRIC MANHOLE (PREFERRED CONFIGURATION)

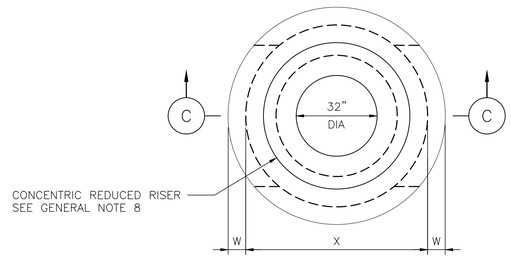

PLAN VIEW C

COVER NOT SHOWN

5–FT & 6–FT DIA MANHOLE

ECCENTRIC MANHOLE (ALTERNATE CONFIGURATION)

TABLE–1

PRECAST ROUND MANHOLE (PRM) MINIMUM REQUIREMENTS FOR 24 IN. TO 42 IN. INTERNAL DIA STORM SEWER PIPES

	SIZE	BASE SLAB THICKNESS	BASE UNIT OR RISER THICKNESS	REDUCED RISER DIA	REDUCING SLAB THICKNESS	TOP SLAB THICKNESS	MAX DEPTH TO TOP OF BASE SLAB	MIN HEIGHT	MAX HOLE DIA
	X	BS	W	ID	RS	TS	MAX DEPTH	BH MIN	MAX HOLE DIA
	FT	IN.	IN.	IN.	IN.	IN.	FT.	IN.	IN.
PRM	4	9	5	–	–	9	25	42	35
	5	9	6	48	9	9	25	42	42
	6	9	7	48/60*	12	9	25	42	56

(*) 60–IN REDUCED RISER IS TO BE USED WHEN DEEMED NECESSARY TO SATISFY WALL PENETRATION SPACING REQUIREMENTS.

FABRICATION NOTES:

1. PROVIDE CLASS "H" CONCRETE IN ACCORDANCE WITH TEXAS DEPARTMENT OF TRANSPORTATION ITEM 421 AND HAVING A MINIMUM COMPRESSIVE STRENGTH OF 5,000 PSI.
2. PROVIDE GRADE 60 REINFORCING STEEL OR EQUIVALENT AREA OF WWR. PROVIDE CIRCUMFERENTIAL REINFORCING STEEL IN VERTICAL WALLS OF BASE, RISER AND CONE IN ACCORDANCE WITH ASTM C478.
3. SLABS WITH A THICKNESS OF 8" OR GREATER REQUIRE SHRINKAGE AND TEMPERATURE REINFORCING STEEL. PROVIDE STEEL AREA = 0.11 IN^2/FT EACH WAY.
4. MANUFACTURE BASE AND RISERS TO NEAREST 3" INCREMENT.
5. DESIGN TONGUE AND GROOVE JOINTS FOR FULL CLOSURE ON BOTH SHOULDERS. MINIMUM SPIGOT DEPTH IS ¾".
6. PROVIDE LIFTING DEVICES IN CONFORMANCE WITH MANUFACTURER'S RECOMMENDATIONS.
7. PROVIDE CAST IRON SOLID COVER, UNLESS NOTED OTHERWISE ELSEWHERE IN THE PLANS.
8. THREE DIFFERENT OPTIONS FOR CAPPING THE MANHOLE RISER NEAR THE FINISHED GRADE ARE SHOWN. CONES CAN BE USED WHEN COVER IS SUFFICIENT TO ALLOW FOR PROPER PLACEMENT. FLAT LIDS ARE TO BE USED WHERE COVER IS LIMITED.

INSTALLATION NOTES:

1. IF REQUIRED ELSEWHERE, INVERTS (BENCHING) TO BE PROVIDED BY CONTRACTOR. CONCRETE OR MORTAR USED FOR INVERT IS SUBSIDIARY TO THIS ITEM. REFER TO CITY OF HOUSTON SPECIFICATION 02082 FOR INVERT (BENCHING) REQUIREMENTS.
2. SEAL TONGUE AND GROOVE JOINTS WITH PREFORMED OR BULK MASTIC IN CONFORMANCE WITH MANUFACTURER'S RECOMMENDATIONS. TONGUE AND GROOVE JOINTS MAY BE GROUTED NO MORE THAN 1" BETWEEN EACH SECTION, OR ½ THE JOINT DEPTH, WHICHEVER IS GREATER.
3. DO NOT GROUT RUBBER GASKET JOINTS WITHOUT MANUFACTURER'S RECOMMENDATION.
4. INITIAL INSTALLATION OF GRADE ADJUSTMENT RINGS IS LIMITED TO 1'–0" MAX AS SHOWN.
5. GRADE ADJUSTMENT RINGS MAY BE INCREASED TO 1'–6" MAX WHEN FUTURE CONSTRUCTION AFFECTS FINAL GRADE OF STRUCTURE. MAKE ADJUSTMENTS GREATER THAN 1'–6" WITH ADDITIONAL RISERS. ADJUSTMENTS MAY BE MADE UP TO THE MAX DEPTH OF 25'–0". STRUCTURE MUST BE EVALUATED IF MAX DEPTH WILL BE EXCEEDED.

GENERAL NOTES:

1. SEE TABLE–1 FOR MINIMUM DESIGN REQUIREMENTS. CONCENTRIC RISER WITH RESPECT TO BASE (ALTERNATIVE CONFIGURATION) FALLS OUTSIDE THE SCOPE OF REQUIREMENTS PROVIDED. ENGINEER OF RECORD ACCEPTS RESPONSIBILITY FOR SAFETY AND ADEQUACY OF MANHOLE IF THE ALTERNATIVE CONFIGURATION IS USED.
2. DESIGNED ACCORDING TO ASTM C478.
3. PAYMENT FOR PRECAST MANHOLE PER SECTION 02082–PRECAST CONCRETE MANHOLES.
4. PIPE OD + PLACEMENT TOLERANCE MUST BE EQUAL OR LESS THAN MAX HOLE DIA. FOR RIGID PIPE, PLACEMENT TOLERANCE IS 4" MAX, 2" MIN. FOR FLEXIBLE PIPE, CONSULT BOOT/SEAL MANUFACTURER'S SPECIFICATION FOR PLACEMENT TOLERANCE.
5. STORM WATER SEWER PIPE INTERNAL DIA SHALL NOT BE LESS THAN 24".
6. FOUNDATION/SUBGRADE TO BE DESIGNED BY ENGINEER AND MEET MINIMUM REQUIREMENTS ACCORDING TO SECTION 02082.
7. ALL STORM WATER MANHOLES ARE TO BE PRECAST CONCRETE, UNLESS OTHERWISE NOTED ELSEWHERE IN THE PLANS.
8. ECCENTRIC REDUCED RISER WITH RESPECT TO BASE IS THE PREFERRED MANHOLE CONFIGURATION. CONCENTRIC REDUCED RISER WITH RESPECT TO BASE MANHOLE CONFIGURATION IS AN ALTERNATIVE DESIGN THAT WILL BE ACCEPTED BASED ON THE NEEDS OF THE CITY OF HOUSTON.
9. CONES MAY BE CONCENTRIC OR ECCENTRIC. REDUCTION CONES ARE ACCEPTABLE. REFER TO MANUFACTURER FOR CONE DIMENSIONS.
10. MANHOLE SIZE SHALL CONSIDER ENGINEERING ECONOMY. THIS DETAIL IS NOT APPLICABLE TO ROUND MANHOLES LARGER THAN 6–FOOT DIA.

APPROVED BY:	APPROVED BY:
Signed by: 1BE8B22072F84DC...	Signed by: BE4653EF00F454EB...
CITY ENGINEER	DIRECTOR OF HOUSTON PUBLIC WORKS
EFF DATE: MAR–02–2026	DWG NO: 02082–12

IDS Engineering Group
13430 NW. Freeway, Suite 700
Houston, Tx. 77040
713.462.3178
TxEng Firm 2726 | TxSurv Firm 10110700

THIS DOCUMENT IS RELEASED FOR THE PURPOSE OF REVIEW UNDER THE AUTHORITY OF MARCEL KHOUW. P.E. 101807 ON 05/27/2026. IT IS NOT TO BE USED FOR CONSTRUCTION PURPOSES.

SURVEYED BY: KUO & ASSOCIATES, INC.
TBPE FIRM #F–4578; TBPLS FIRM #1007560

CITY OF HOUSTON

HOUSTON PUBLIC WORKS STANDARD

STORM SEWER TYPE "C" PRECAST ROUND MANHOLE

STORM SEWER DETAILS (SHEET 2 OF 7)

WBS NUMBER	FOR CITY OF HOUSTON USE ONLY
R–00267–0179–4	
DRAWING SCALE	
NOT TO SCALE	
CITY OF HOUSTON PM	
NAWARAJ PANTA, P.E.	
DWG. NO. C–23	SHEET NO. 304 OF 327

DISCLAIMER:
THE USE OF THIS STANDARD IS GOVERNED BY THE TEXAS ENGINEERING PRACTICE ACT. THE DESIGN REQUIREMENTS ON THIS STANDARD DO NOT PURPORT TO ADDRESS ALL OF THE SAFETY CONCERNS ASSOCIATED WITH THEIR USE. THE ENGINEER OF RECORD (EOR) IS TO REVIEW THESE DESIGN REQUIREMENTS AND BY AUTHORIZING THEIR USE, ACCEPTS RESPONSIBILITY FOR THEIR APPLICABILITY, ADEQUACY AND SAFETY. NO WARRANTY OF ANY KIND IS MADE BY THE CITY OF HOUSTON FOR ANY PURPOSES WHATSOEVER. THE CITY OF HOUSTON ASSUMES NO RESPONSIBILITY FOR INCORRECT RESULTS OR DAMAGES RESULTING FROM ITS USE.

PLOTTED: 5/13/2026 6:51 PM

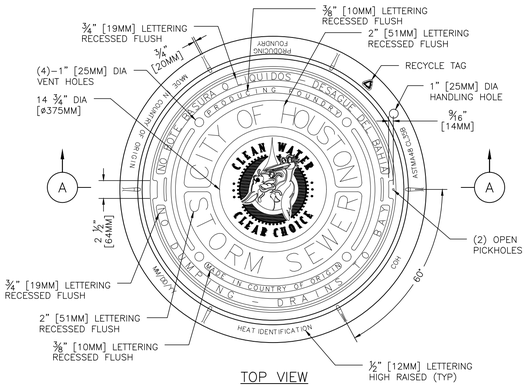

TOP VIEW

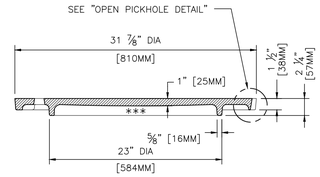

*** MACHINED SURFACE

COVER SECTION

NOTES:

1. APPROXIMATE WEIGHTS:

   FRAME – 125 LBS (57KGS)
   COVER – 205 LBS (93KGS)
   UNIT – 330 LBS (150KGS)

2. MATERIALS – GRAY IRON ASTM A48 CL35B.
3. CASTING MUST BE MANUFACTURED AND PROOF TESTED IN ACCORDANCE WITH AASHTO M306.
4. EJ V1430 ASY OR APPROVED EQUAL
5. IDENTIFICATION MARKINGS MUST COMPLY WITH CITY SPECIFICATIONS. MARKINGS NOT SHOWN ON THIS DETAIL MUST BE PLACED ON THE CASTING:
   A. PROVIDE ALL FRAME MARKINGS ON THE TOP SIDE OF THE FRAME.
   B. PROVIDE GRATE AND COVER MARKINGS ON EITHER TOP OR BOTTOM OF CASTING.

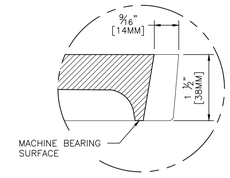

OPEN PICKHOLE DETAIL

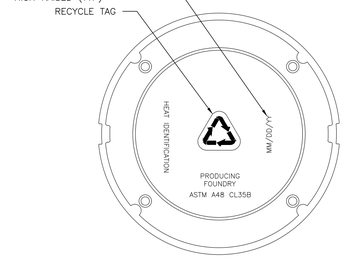

BOTTOM VIEW OF COVER

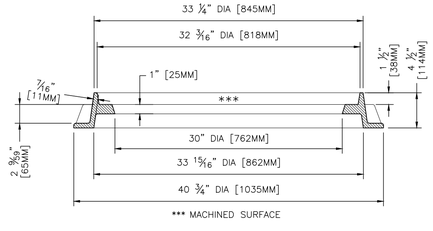

*** MACHINED SURFACE

FRAME SECTION

SECTION A–A

DISCLAIMER:
THE USE OF THIS STANDARD IS GOVERNED BY THE TEXAS ENGINEERING PRACTICE ACT. THE EJDSON REQUIREMENTS ON THIS STANDARD DO NOT PURPORT TO ADDRESS ALL SAFETY PROBLEMS ASSOCIATED WITH ITS USE. IT IS THE RESPONSIBILITY OF THE USER OF THIS STANDARD TO ESTABLISH APPROPRIATE SAFETY AND HEALTH PRACTICES AND DETERMINE THE APPLICABILITY OF REGULATORY LIMITATIONS BEFORE USE. ACCORDINGLY, THIS STANDARD IS MADE AVAILABLE WITH NO WARRANTY OF ANY KIND IS MADE BY THE CITY OF HOUSTON FOR ANY PURPOSES WHATSOEVER. THE CITY OF HOUSTON ASSUMES NO RESPONSIBILITY FOR INCORRECT RESULTS OR DAMAGES RESULTING FROM ITS USE.

CITY OF HOUSTON HOUSTON PUBLIC WORKS STANDARD	
STORM SEWER MANHOLE FRAME AND COVER	
(SCALE: NOT TO SCALE)	
APPROVED BY:	
Signed by: 1BE8B2207DF3400...	Signed by: B24E53FDDF454EB...
CITY ENGINEER	DIRECTOR OF HPW
EFF DATE: MAR–02–2026	DWG NO: 02090–02

NO.	DATE	REVISION	APP.

IDS Engineering Group
13430 NW. Freeway, Suite 700
Houston, Tx. 77040
713.462.3178
TxEng Firm 2726 | TxSurv Firm 10110700

SURVEYED BY: KUO & ASSOCIATES, INC.
TBPE FIRM #F–4578; TBPLS FIRM #1007560

THIS DOCUMENT IS RELEASED FOR THE PURPOSE OF REVIEW UNDER THE AUTHORITY OF MARCEL KHOUW, P.E. 101807 ON 05/27/2026. IT IS NOT TO BE USED FOR CONSTRUCTION PURPOSES.

CITY OF HOUSTON
HOUSTON PUBLIC WORKS

LIFT STATION RENEWAL AND REPLACEMENT FY 2023

STORM SEWER DETAILS (SHEET 3 OF 7)

WBS NUMBER	FOR CITY OF HOUSTON USE ONLY
R–000267–0179–4	
DRAWING SCALE	
HORIZ: N.T.S. VERT: N/A	
CITY OF HOUSTON PM	
NAWARAJ PANTA, P.E.	
SHEET NO. 333 OF 361	

DWG. NO.
C–24

FILE PATH: \\idseg.com\FS\Projects\0000\005708500 CoH Lift Stations – FY 2023\CAD\DWG\PRODUCTION\333–STORM SWR DTLS.dwg

PLOTTED: 5/13/2026 6:51 PM

FILE PATH: \\idseg.com\FS\Projects\0000\005708500 CoH Lift Stations - FY 2023\CAD\DWG\PRODUCTION\334-STORM SWR DTLS.dwg

DISCLAIMER:
THE USE OF THIS STANDARD IS GOVERNED BY THE TEXAS ENGINEERING PRACTICE ACT. THE DESIGN REQUIREMENTS ON THIS STANDARD DO NOT PURPORT TO ADDRESS ALL OF THE SAFETY CONCERNS ASSOCIATED WITH THEIR USE. THE ENGINEER OF RECORD (EOR) IS TO REVIEW THESE DESIGN REQUIREMENTS AND BY AUTHORIZING THEIR USE ASSUMES RESPONSIBILITY FOR PROPER DESIGN AND SAFETY MEASURES IN THE PLANS AND SPECIFICATIONS. THE CITY OF HOUSTON IS NOT RESPONSIBLE FOR ANY DESIGN ELEMENTS WHATSOEVER. THE CITY OF HOUSTON ASSUMES NO RESPONSIBILITY FOR INCORRECT RESULTS OR DAMAGES RESULTING FROM ITS USE

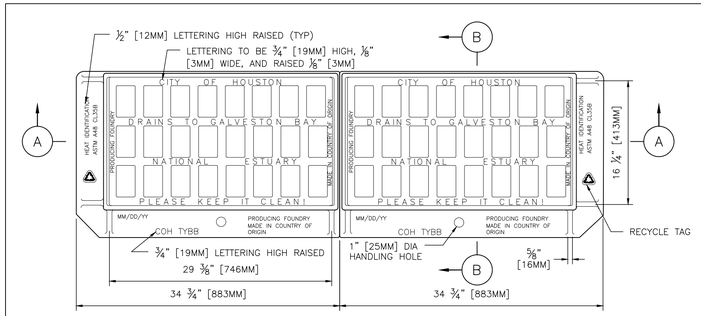

TOP VIEW

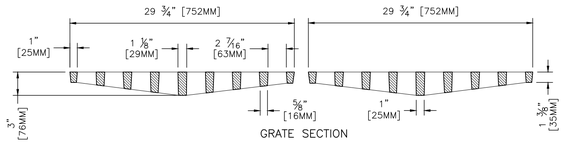

GRATE SECTION

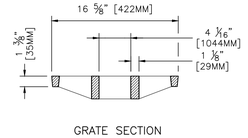

GRATE SECTION

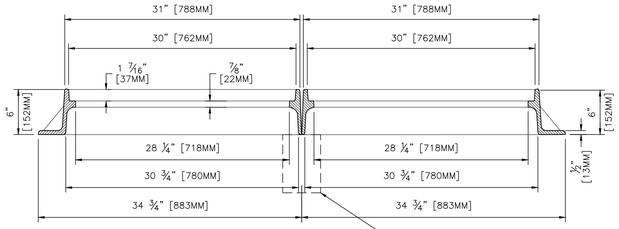

FRAME SECTION

SECTION A–A

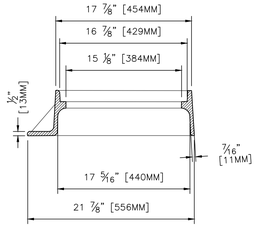

FRAME SECTION

SECTION B–B

NOTES:

1. APPROXIMATE WEIGHTS:

   EACH GRATE – 115 LBS (52KGS)
   EACH FRAME – 120 LBS (55KGS)
   EACH UNIT – 235 LBS (107KGS)

2. MATERIAL– GRAY IRON ASTM A48 CL35B.
3. CASTING MUST BE MANUFACTURED AND PROOF TESTED IN ACCORDANCE WITH AASHTO M306.
4. EJ V4243 ASY OR APPROVED EQUAL
   TYPE B–B 480 SQ. IN. [3096 SQ. CM.]
   TYPE B 240 SQ. IN. [1548 SQ. CM.]
5. IDENTIFICATION MARKINGS MUST COMPLY WITH CITY SPECIFICATIONS. MARKINGS NOT SHOWN ON THIS DETAIL MUST BE PLACED ON THE CASTING:
   A. PROVIDE ALL FRAME MARKINGS ON THE TOP SIDE OF THE FRAME.
   B. PROVIDE GRATE AND COVER MARKINGS ON EITHER TOP OR BOTTOM OF CASTING.
6. FOR INLET MAINTENANCE REFER TO COH STD 02632–04. FOR NEW INLET CONSTRUCTION REFER TO COH STD 02633–02.

CITY OF HOUSTON
HOUSTON PUBLIC WORKS STANDARD

STORM SEWER FRAME AND GRATE FOR TYPE "B–B" INLET DOUBLE ASSEMBLY
(SCALE: NOT TO SCALE)

APPROVED BY:

CITY ENGINEER	DIRECTOR OF HPW
Signed by: 1BEB8D2EF2F94DC...	Signed by: BE4E3EFDDF454EB...

EFF DATE: MAR–02–2026 DWG NO: 02090–05

DISCLAIMER:
THE USE OF THIS STANDARD IS GOVERNED BY THE TEXAS ENGINEERING PRACTICE ACT. THE DESIGN REQUIREMENTS ON THIS STANDARD DO NOT PURPORT TO ADDRESS ALL OF THE SAFETY CONCERNS ASSOCIATED WITH THEIR USE. THE ENGINEER OF RECORD (EOR) IS TO REVIEW THESE DESIGN REQUIREMENTS AND BY AUTHORIZING THEIR USE ASSUMES RESPONSIBILITY FOR PROPER DESIGN AND SAFETY MEASURES IN THE PLANS AND SPECIFICATIONS. THE CITY OF HOUSTON IS NOT RESPONSIBLE FOR ANY DESIGN ELEMENTS WHATSOEVER. THE CITY OF HOUSTON ASSUMES NO RESPONSIBILITY FOR INCORRECT RESULTS OR DAMAGES RESULTING FROM ITS USE

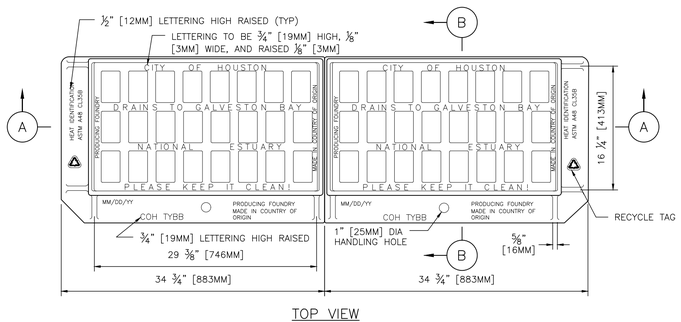

TOP VIEW

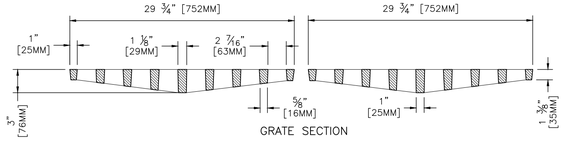

GRATE SECTION

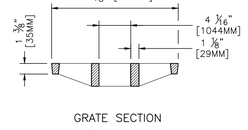

GRATE SECTION

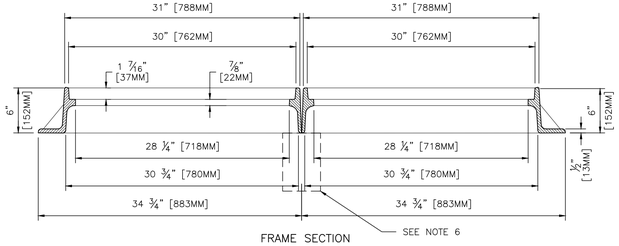

FRAME SECTION

SECTION A–A

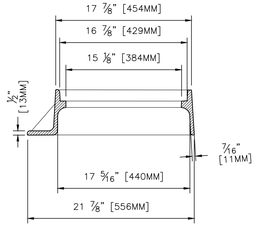

FRAME SECTION

SECTION B–B

NOTES:

1. APPROXIMATE WEIGHTS:

   EACH GRATE – 115 LBS (52KGS)
   EACH FRAME – 120 LBS (55KGS)
   EACH UNIT – 235 LBS (107KGS)

2. MATERIAL– GRAY IRON ASTM A48 CL35B.
3. CASTING MUST BE MANUFACTURED AND PROOF TESTED IN ACCORDANCE WITH AASHTO M306.
4. EJ V4243 ASY OR APPROVED EQUAL
   TYPE B–B 480 SQ. IN. [3096 SQ. CM.]
   TYPE B 240 SQ. IN. [1548 SQ. CM.]
5. IDENTIFICATION MARKINGS MUST COMPLY WITH CITY SPECIFICATIONS. MARKINGS NOT SHOWN ON THIS DETAIL MUST BE PLACED ON THE CASTING:
   A. PROVIDE ALL FRAME MARKINGS ON THE TOP SIDE OF THE FRAME.
   B. PROVIDE GRATE AND COVER MARKINGS ON EITHER TOP OR BOTTOM OF CASTING.
6. FOR INLET MAINTENANCE REFER TO COH STD 02632–04. FOR NEW INLET CONSTRUCTION REFER TO COH STD 02633–02.

CITY OF HOUSTON
HOUSTON PUBLIC WORKS STANDARD

STORM SEWER TYPE "A" INLET GRATE AND FRAME
(SCALE: NOT TO SCALE)

APPROVED BY:

CITY ENGINEER	DIRECTOR OF HPW
Signed by: 1BEB8D2EF2F94DC...	Signed by: BE4E3EFDDF454EB...

EFF DATE: MAR–02–2026 DWG NO: 02090–07

NO.	DATE	REVISION	APP.

IDS Engineering Group
13430 NW. Freeway, Suite 700
Houston, Tx. 77040
713.462.3178
TxEng Firm 2726 | TxSurv Firm 10110700

SURVEYED BY: KUO & ASSOCIATES, INC.
TBPE FIRM #F–4578; TBPLS FIRM #1007560

THIS DOCUMENT IS RELEASED FOR THE PURPOSE OF REVIEW UNDER THE AUTHORITY OF MARCEL KHOUW, P.E. 101807 ON 05/27/2026. IT IS NOT TO BE USED FOR CONSTRUCTION PURPOSES.

CITY OF HOUSTON
HOUSTON PUBLIC WORKS

LIFT STATION RENEWAL AND REPLACEMENT FY 2023

STORM SEWER DETAILS (SHEET 4 OF 7)

WBS NUMBER	FOR CITY OF HOUSTON USE ONLY
R–000267–0179–4	
DRAWING SCALE	
HORIZ: N.T.S. VERT: N/A	
CITY OF HOUSTON PM	
NAWARAJ PANTA, P.E.	

DWG. NO.	SHEET NO. 334 OF 361
C–25	

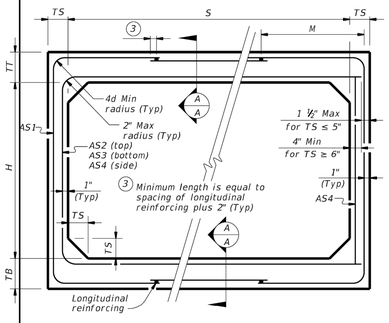

CORNER OPTION "A" CORNER OPTION "B"

FILL HEIGHT 2 FT AND GREATER

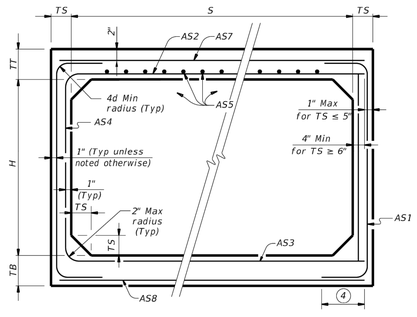

CORNER OPTION "A" CORNER OPTION "B"

FILL HEIGHT LESS THAN 2 FT

4 Length is equal to spacing of longitudinal reinforcing plus 2". (10" Min) (Typ)

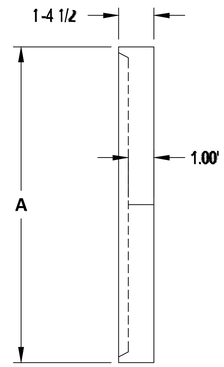

PLAN VIEW

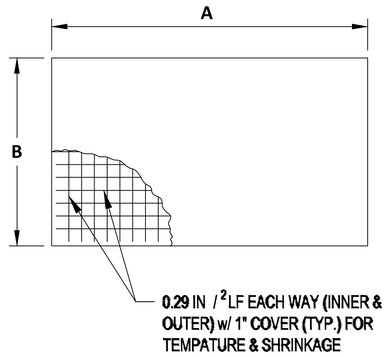

END VIEW OF RCB

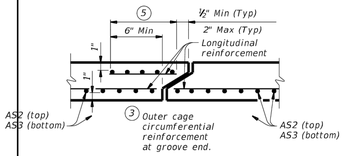

SECTION A-A

(Showing top and bottom slab joint reinforcement.)

1. FOR EXACT LENGTH, LOCATION & QUANTITY SEE RINKER MATERIALS LAYING SCHEDULE.
2. FOR ADDITIONAL INFORMATION SEE APPROPRIATE RCB JOINT & REINFORCEMENT DETAIL

MATERIAL NOTES:

Provide 0.03 sq. in./ft. minimum longitudinal reinforcement at each face in slabs and walls. This minimum requirement may be met by the transverse wires when wire mesh reinforcement is used.

Provide Class H concrete (f'c = 5,000 psi).

GENERAL NOTES:

Designs shown conform to ASTM C1577. Refer to ASTM C1577 for information or details not shown.

See Box Culverts Precast Miscellaneous Details (SCP-MD) standard sheet for details and notes not shown.

In lieu of furnishing the designs shown on this sheet, the contractor may furnish an alternate design that is equal to or exceeds the box design for the design fill height in the table. Submit shop plans for alternate designs in accordance with Item "Precast Concrete Structural Members (Fabrication)".

PROP RCB		PLUG DIMENSIONS	
Span (ft)	Rise (ft)	A	B
2	6	3' 4"	7' 4"
6	3	7' 4"	4' 4"
5	4	6' 4"	5' 4"
8	5	9' 4"	6' 4"

RCB END CAP DETAIL

N.T.S.

1 **UNDERGROUND RCB DETENTION DETAIL**

Scale: N.T.S.

File:

NO.	DATE	REVISION	APP.

IDS Engineering Group
13430 NW. Freeway, Suite 700
Houston, Tx. 77040
713.462.3178
TxEng Firm 2726 | TxSurv Firm 10110700

SURVEYED BY: KUO & ASSOCIATES, INC.
TBPE FIRM #F-4578; TBPLS FIRM #1007560

THIS DOCUMENT IS RELEASED FOR THE PURPOSE OF REVIEW UNDER THE AUTHORITY OF MARCEL KHOUW, P.E. 101807 ON 05/27/2026. IT IS NOT TO BE USED FOR CONSTRUCTION PURPOSES.

CITY OF HOUSTON
HOUSTON PUBLIC WORKS

LIFT STATION RENEWAL AND REPLACEMENT FY 2023

STORM SEWER DETAILS (SHEET 5 OF 7)

WBS NUMBER	FOR CITY OF HOUSTON USE ONLY
R-000267-0179-4	
DRAWING SCALE	
HORIZ: N.T.S. VERT: N/A	
CITY OF HOUSTON PM	
NAWARAJ PANTA, P.E.	
SHEET NO. 335 OF 361	

DWG. NO. C-26

PLOTTED: 5/13/2026 6:51 PM
FILE PATH: \\dseg.com\FS\Projects\0000\005708500 CoH Lift Stations - FY 2023\CAD\DWG\PRODUCTION\335-STORM SWR DTLS.dwg

PLOTTED: 5/13/2026 6:51 PM

DISCLAIMER:
THE USE OF THIS STANDARD IS GOVERNED BY THE TEXAS ENGINEERING PRACTICE ACT. THE LICENSE REQUIREMENTS ON THIS STANDARD DO NOT PURPORT TO ADDRESS ALL OF THE SAFETY CONDITIONS ASSOCIATED WITH USE OF THIS STANDARD. IN ADDITION, THIS STANDARD MAY BE REVISED OR WITHDRAWN AT ANY TIME TO REFLECT CURRENT CONDITIONS. ANY PERSON OR ENTITY THAT USES THIS STANDARD IN ANY MANNER IS SOLELY RESPONSIBLE FOR THE RESULTS OBTAINED FROM SUCH USE, ACCEPTS RESPONSIBILITY FOR THEIR APPLICABILITY, ADEQUACY AND SAFETY, NO WARRANTY OF ANY KIND IS MADE BY THE CITY OF HOUSTON FOR ANY PURPOSES WHATSOEVER. THE CITY OF HOUSTON ASSUMES NO RESPONSIBILITY FOR INCORRECT RESULTS OR DAMAGES RESULTING FROM ITS USE.

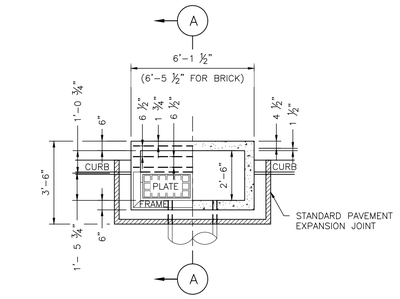

HALF PLAN HALF SECTION PLAN

PLAN VIEW

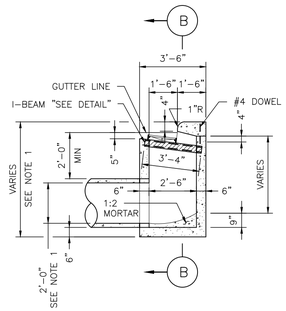

SECTION A–A

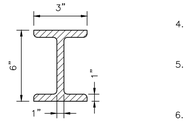

I–BEAM DETAIL

ACCEPTABLE ALTERNATE STEEL BEAM SIZES:

S6X17.25

W6X16 (GALVANIZED)

NOTES:

1. DIMENSION VARIES BASED ON PIPE DIAMETER AND WALL THICKNESS.
2. CENTER REINFORCING IN SLAB AND WALLS. CENTER STEEL BEAM ON INLET AND CAST INTO WALLS AS SHOWN.
3. WHEN TOP OF CURB TO FLOWLINE IS GREATER THAN 8 FEET USE TYPE "C" INLET.
4. WHEN AN EXISTING "B–B" INLET WILL BE REPLACED BY A NEW INLET USE COH STD 02633–02.
5. EXISTING INLETS THAT WERE CONSTRUCTED ACCORDING TO 02632–04 SHALL BE MAINTAINED AS SPECIFIED IN DETAIL 02632–04.
6. EOR TO BE RESPONSIBLE FOR DESIGNING STRUCTURAL COMPONENTS IN THIS DETAIL.

GENERAL NOTES:

1. USE STANDARD CAST IRON FRAME & PLATES.
2. LEAD SHALL LEAVE INLET AT LOCATION AND GRADE REQUIRED.

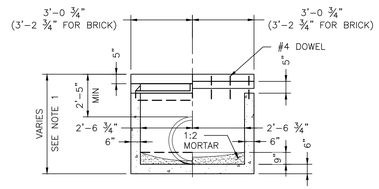

HALF SECTION THRU GRATE HALF SECTION THRU CURB BEAM

SECTION B–B

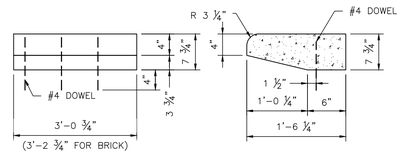

HALF FRONT ELEV TRANSVERSE SECTION

PRECAST CURB BEAM

NO.	DATE	REVISION	APP.

CITY OF HOUSTON
HOUSTON PUBLIC WORKS STANDARD

STORM SEWER TYPE "B–B" INLET FOR MAINTENANCE ONLY

(SCALE: NOT TO SCALE)

APPROVED BY:

CITY ENGINEER	DIRECTOR OF HPW
Signed by: 1BE8B22EF2F340C...	Signed by: 52.4F1EF1DF414EB...

EFF DATE: MAR–02–2026 DWG NO: 02632–04

STEP 1: EXIST TYPE "B" INLET

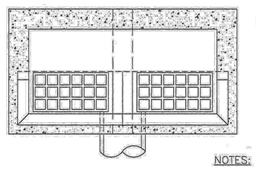

TOP VIEW

STEP 2:

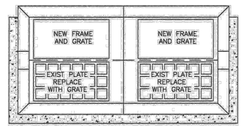

TOP VIEW

NOTES:
1. AFTER REMOVING EXIST CURB, RAISE EXIST FRAME TO GUTTER GRADE.
2. REPLACE EXIST PLATE WITH A GRATE.
3. ADD NEW FRAME AND GRATE NEXT TO EXIST FRAME.
4. BACKFILL INLET TO A POINT ONE FOOT BEHIND THE CURB WITH 1 SACK/TON CEMENT STABILIZED SAND.

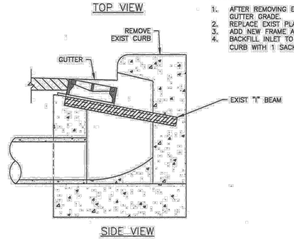

SIDE VIEW

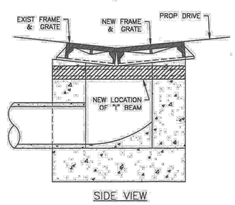

SIDE VIEW

STEP 3: CONSTRUCT NEW TYPE "B–B" INLET ON CURB RETURN OF PROPOSED DRIVEWAY

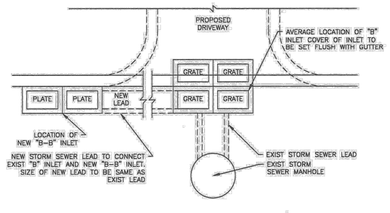

STORM SEWER TYPE "B" INLET RELOCATION

(SCALE: NOT TO SCALE)

IDS Engineering Group
13430 NW. Freeway, Suite 700
Houston, Tx. 77040
713.462.3178
TxEng Firm 2726 | TxSurv Firm 10110700

THIS DOCUMENT IS RELEASED FOR THE PURPOSE OF REVIEW UNDER THE AUTHORITY OF MARCEL KHOUW, P.E. 101807 ON 05/27/2026. IT IS NOT TO BE USED FOR CONSTRUCTION PURPOSES.

SURVEYED BY: KUO & ASSOCIATES, INC.
TBPE FIRM #F–4578; TBPLS FIRM #1007560

CITY OF HOUSTON
HOUSTON PUBLIC WORKS

LIFT STATION RENEWAL AND REPLACEMENT FY 2023

STORM SEWER DETAILS (SHEET 6 OF 7)

WBS NUMBER	FOR CITY OF HOUSTON USE ONLY
R–000267–0179–4	
DRAWING SCALE	
HORIZ: N.T.S. VERT: N/A	
CITY OF HOUSTON PM	
NAWARAJ PANTA, P.E.	

DWG. NO.	SHEET NO. 336 OF 361
C–27	

FILE PATH: \\idseg.com\FS\Projects\0000\005708500 CoH Lift Stations – FY 2023\CAD\DWG\PRODUCTION\336-STORM SWR DTLS.dwg

PLOTTED: 5/13/2026 6:51 PM

FILE PATH: \\idseg.com\FS\Projects\0000\005708500 CoH Lift Stations - FY 2023\CAD\DWG\PRODUCTION\337-STORM SWR DTLS.dwg

NO.	DATE	REVISION	APP.

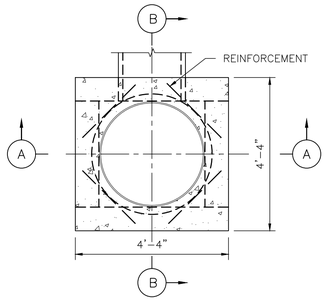

PLAN VIEW

NOTES:

1. TYPE "E" INLET TOP CAN BE CONSTRUCTED ON A STANDARD "C" MANHOLE.
2. PROVIDE CLASS A CONCRETE WITH A MINIMUM COMPRESSIVE STRENGTH OF 4,000 PSI AND GRADE 60 REINFORCING STEEL IN ACCORDANCE WITH COH STANDARD SPECIFICATION SECTION 03315.
3. ENGINEER OF OF RECORD TO DESIGN REINFORCEMENT AND ENSURE THE DESIGN MEETS THE PROJECT REQUIREMENTS.

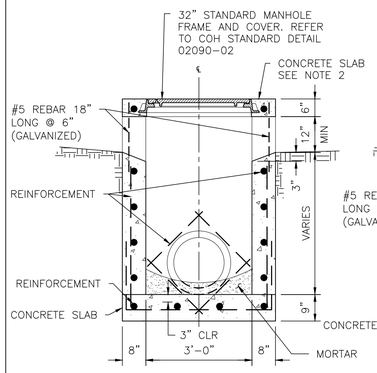

SECTION A-A

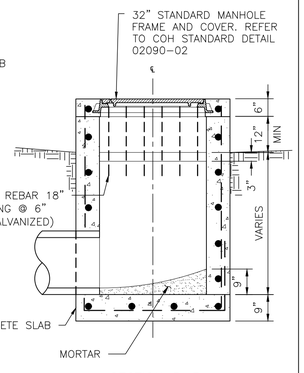

SECTION B-B

DISCLAIMER: THE USE OF THIS STANDARD IS GOVERNED BY THE TEXAS ENGINEERING PRACTICE ACT. THE DESIGN REQUIREMENTS ON THIS STANDARD DO NOT PURPORT TO ADDRESS ALL OF THE SAFETY CONCERNS ASSOCIATED WITH THEIR USE. THE ENGINEER OF RECORD (EOR) IS TO REVIEW THESE DESIGN REQUIREMENTS AND BY AUTHORIZING THEIR USE, ACCEPTS RESPONSIBILITY FOR THEIR APPLICABILITY, ADEQUACY AND SAFETY. NO WARRANTY OF ANY KIND IS MADE BY THE CITY OF HOUSTON FOR ANY PURPOSES WHATSOEVER. THE CITY OF HOUSTON ASSUMES NO RESPONSIBILITY FOR INCORRECT RESULTS OR DAMAGES RESULTING FROM ITS USE.

APPROVED BY:

CITY ENGINEER	DIRECTOR OF HPW
Signed by: 1BEBBE2207ZF84DC...	Signed by: DE463EF7DDF454EB...

CITY OF HOUSTON
HOUSTON PUBLIC WORKS STANDARD

STORM SEWER TYPE "E" INLET

(SCALE: NOT TO SCALE)

EFF DATE: MAR-02-2026 **DWG NO:** 02632-09

IDS Engineering Group
13430 NW. Freeway, Suite 700
Houston, Tx. 77040
713.462.3178
TxEng Firm 2726 | TxSurv Firm 10110700

SURVEYED BY: KUO & ASSOCIATES, INC.
TBPE FIRM #F-4578; TBPLS FIRM #1007560

THIS DOCUMENT IS RELEASED FOR THE PURPOSE OF REVIEW UNDER THE AUTHORITY OF MARCEL KHOUW, P.E. 101807 ON 05/27/2026. IT IS NOT TO BE USED FOR CONSTRUCTION PURPOSES.

CITY OF HOUSTON
HOUSTON PUBLIC WORKS

LIFT STATION RENEWAL AND REPLACEMENT FY 2023

STORM SEWER DETAILS (SHEET 7 OF 7)

WBS NUMBER	FOR CITY OF HOUSTON USE ONLY
R-000267-0179-4	
DRAWING SCALE	
HORIZ: N.T.S. VERT: N/A	
CITY OF HOUSTON PM	
NAWARAJ PANTA, P.E.	
SHEET NO. 337 OF 361	

DWG. NO. C-28

PLOTTED: 5/12/2026 8:19 PM

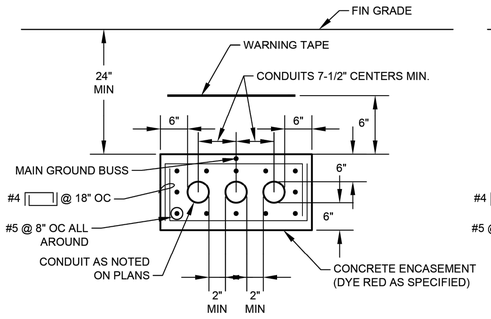

TYP MULTI-CONDUIT DUCTBANK SECTION

NOTE: TIE MAIN GROUNDING BUS TO REBAR AT A MAXIMUM INTERVAL OF EVERY 20 FEET.

DETAIL 1 / NTS

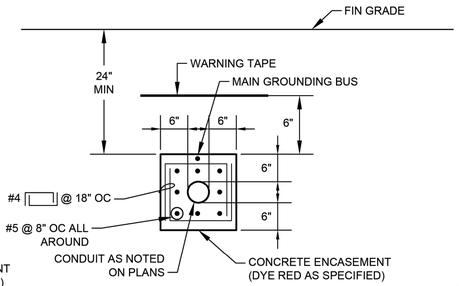

TYP SINGLE-CONDUIT DUCTBANK SECTION

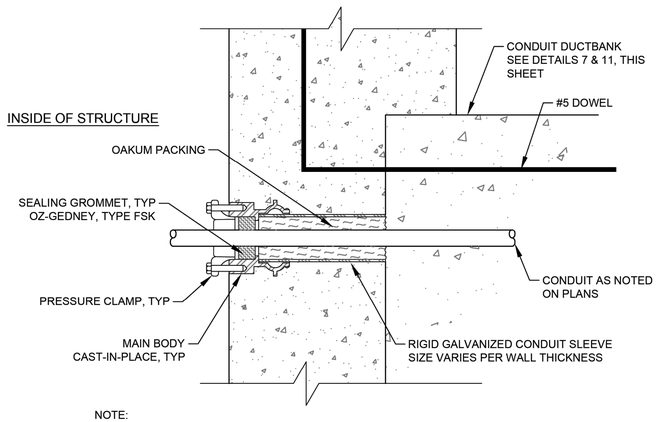

NOTE:

WALL SEAL SHOWN IS TYPICAL FOR EACH CONDUIT IN DUCTBANK.

SINGLE ENDED TYPE

FOR USE WHERE CONDUIT OUTSIDE THE STRUCTURE IS ENCASED IN CONCRETE

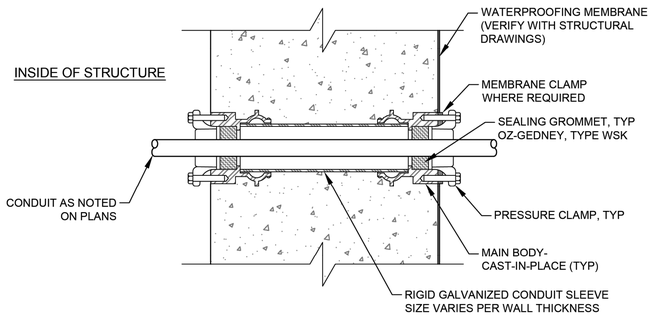

DOUBLE ENDED TYPE WITH MEMBRANE

FOR USE WHERE CONDUIT OUTSIDE THE STRUCTURE IS ENCASED IN CONCRETE

TYPICAL CONDUIT SEALS

DETAIL 4 / NTS

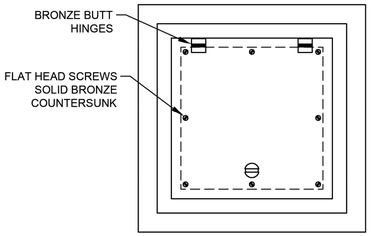

TOP PLAN

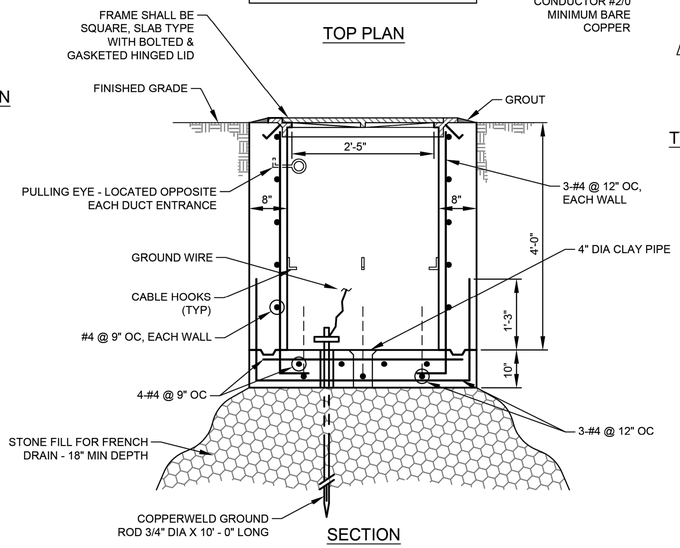

SECTION

TYPICAL ELECTRICAL HANDHOLE CONSTRUCTION

DETAIL 2 / NTS

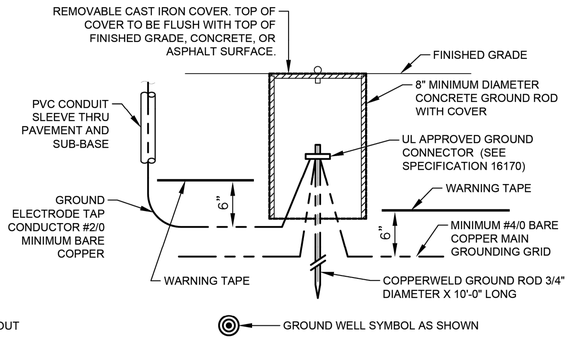

TYPICAL GROUND ROD AND WELL INSTALLATION

DETAIL 3 / NTS

GROUND CONNECTOR SCHEDULE	
WIRE SIZE	BURNDY
#2 AWG	GAR 6426
#2/0 AWG	GAR 6426
#4/0 AWG	GAR 6429
500 kcmil	GAR 6434

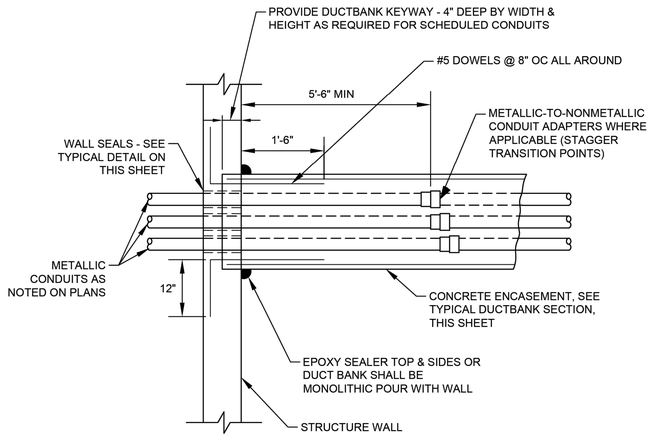

PLAN

TYPICAL DUCTBANK ENTRANCE AT STRUCTURE WALL

DETAIL 5 / NTS

NO.	DATE	REVISION	APP.

FOR INTERIM REVIEW ONLY NOT INTENDED FOR PERMIT, BIDDING OR CONSTRUCTION PURPOSES.
ENGINEER:
HOSS FOROUZAN
P.E. SERIAL NO.77748
05/18/2026

GAI
Gupta & Associates, Inc.
CONSULTING ENGINEERING
Registration No. F-2593
302 Dennis St., Houston, Texas 77006
Tel: 713-636-2936
Fax: 713-636-2987
email: hforouzan@gaiconsulting.com

IDS Engineering Group
13430 NW. Freeway
Suite 700
Houston, Tx. 77040
713.462.3178
TxEng Firm 2726
TxSurv Firm 10110700

CITY OF HOUSTON
HOUSTON PUBLIC WORKS

LIFT STATION RENEWAL AND REPLACEMENT FY 2023

ELECTRICAL TYPICAL DETAILS–I

WBS NUMBER	FOR CITY OF HOUSTON USE ONLY
R–000267–0179–4	
DRAWING SCALE	
HORIZ: NONE VERT: NONE	
CITY OF HOUSTON PM	
NAWARAJ PANTA, P.E.	
SHEET NO. 338 OF 361	

DWG. NO. E–01

IDS JOB No. 0057-085-00

FILE PATH: O:\H8108_Lift Station Rehabilitation And Reconstruction (IDS)\6 Drawings\Electrical\Working\General\H8108_E–01.dwg

PLOTTED: 5/12/2026 8:19 PM

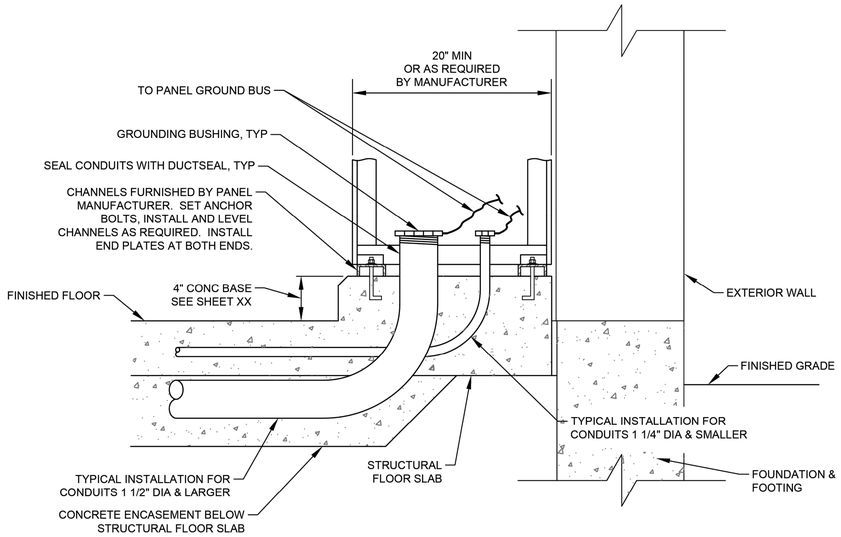

TYPICAL MCC & CONTROL PANEL INSTALLATION & CONDUIT ENTRY

DETAIL 6 / - NTS

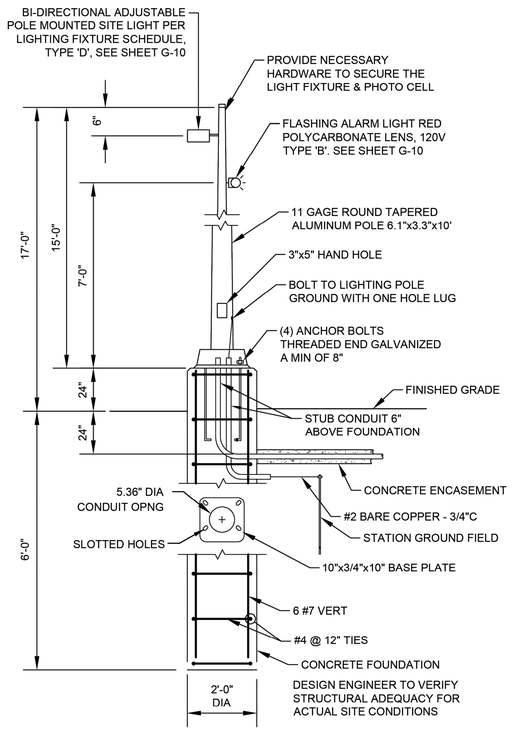

TYPICAL YARD LIGHT

DETAIL 7 / - NTS

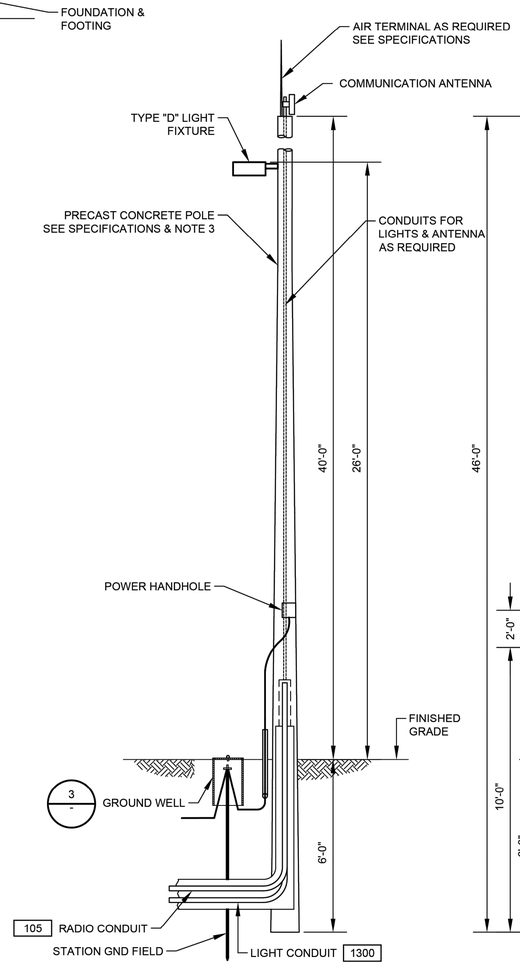

COMMUNICATION POLE MOUNTING DETAIL

DETAIL 8 / - NTS

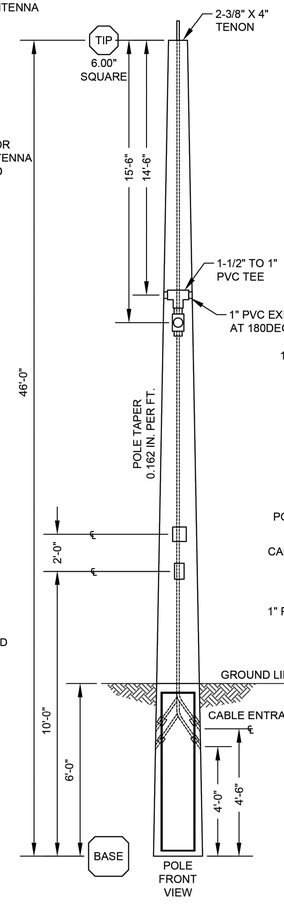

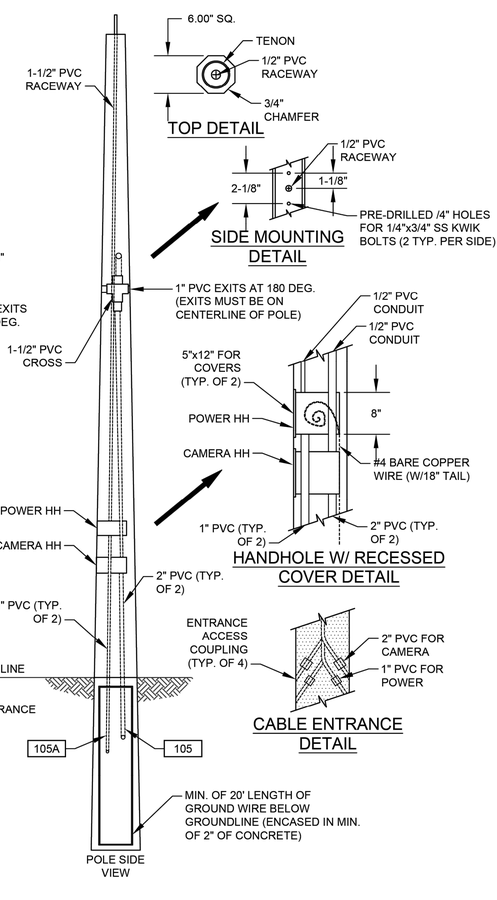

NOTES:

1. ON GROUND WIRE TERMINATION'S, ALL PAINTED OR COATED METAL SURFACES SHALL BE REMOVED AND CLEANED TO BARE METAL. TO OBTAIN A SOUND GROUND CONNECTION. ONCE INSTALLED APPLY PROTECTIVE COATING ON BARE METAL AREAS PER MANUFACTURER REQUIREMENTS.
2. PRECAST CONCRETE POLE TO MOUNT THE RADIO RECEIVER.
3. 1" CONDUIT TO EXTEND TO THE TOP OF POLE FOR ETHERNET CABLE FOR RADIO.

FOR INTERIM REVIEW
ONLY NOT INTENDED FOR
PERMIT, BIDDING OR
CONSTRUCTION PURPOSES.
ENGINEER:
HOSS FOROUZAN
P.E. SERIAL NO.77748
05/18/2026

GAI
Gupta & Associates, Inc.
CONSULTING ENGINEERING
Registration No. F-2593
302 Dennis St.,
Houston, Texas 77006
Tel: 713-636-2936
Fax: 713-636-2987
email: hforouzan@gaiconsulting.com

IDS Engineering Group
13430 NW. Freeway
Suite 700
Houston, Tx. 77040
713.462.3178
TxEng Firm 2726
TxSurv Firm 10110700

CITY OF HOUSTON
HOUSTON PUBLIC WORKS

LIFT STATION RENEWAL AND REPLACEMENT FY 2023

ELECTRICAL – TYPICAL DETAILS–II

WBS NUMBER	FOR CITY OF HOUSTON USE ONLY
R–000267–0179–4	
DRAWING SCALE	
HORIZ: NTS VERT: NTS	
CITY OF HOUSTON PM	
NAWARAJ PANTA, P.E.	
DWG. NO. E–02	SHEET NO. 339 OF 361

NO.	DATE	REVISION	APP.

FILE PATH: O:\H8108_Lift Station Rehabilitation And Reconstruction (IDS)\6 Drawings\Electrical\1Working\General\H8108_E–02.dwg

IDS JOB No. 0057-085-00

PLOTTED: 5/12/2026 8:19 PM

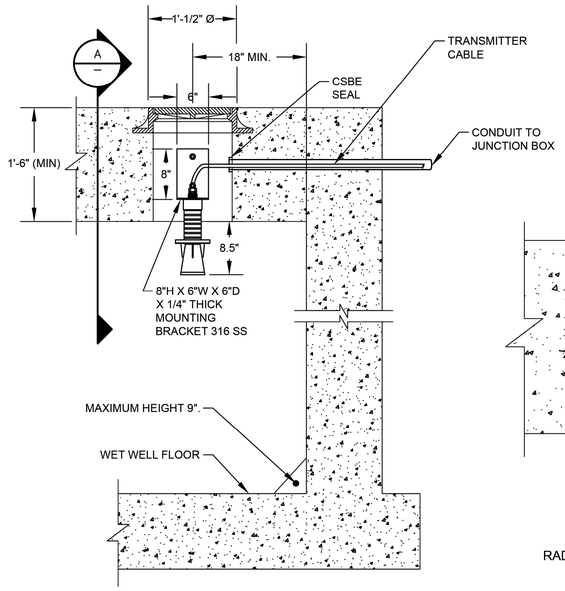

RADAR LEVEL TRANSMITTER MOUNTING
(TYP. LT-1, LT-2)

DETAIL 1
NTS
(SEE NOTE 1, 2, 4 & 5)

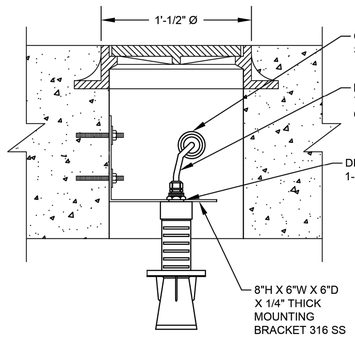

RADAR LEVEL TRANSMITTER MOUNTING
TYP. LT-1 & LT-2

SECTION A
NTS
(SEE NOTE 1, 2, 4 & 5)

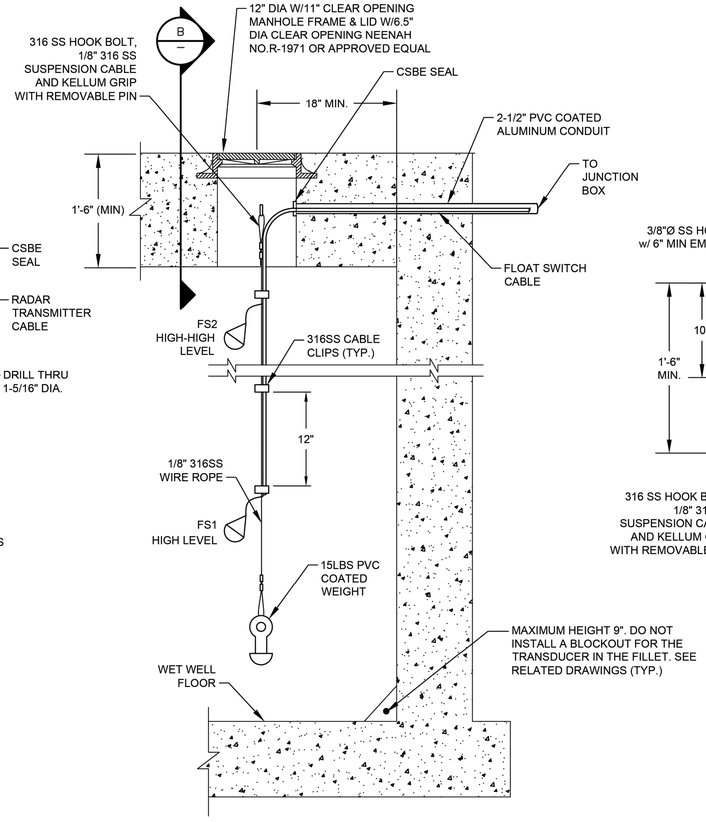

FLOAT SWITCH MOUNTING

DETAIL 2
NTS
(SEE NOTES 3, 4 & 5)

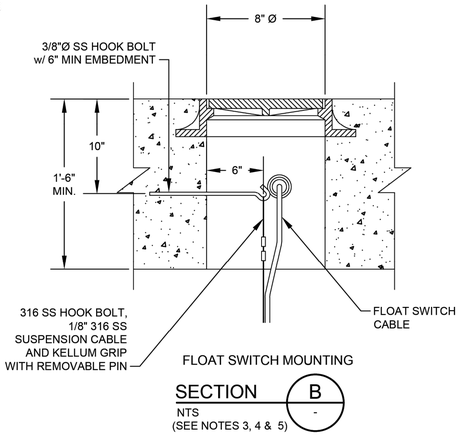

FLOAT SWITCH MOUNTING

SECTION B
NTS
(SEE NOTES 3, 4 & 5)

NOTES:

1. NEW RADAR LEVEL TRANSMITTERS FOR LT-1, LT-2.
2. NEW MANHOLES FOR RADAR LEVEL TRANSMITTERS LT-1, LT-2.
3. NEW MANHOLE FOR FLOAT SWITCHES.
4. PAINT MANHOLE LIDS AND HATCHES HUNTER GREEN.
5. NEW MANHOLE INSTALLATION.
6. RETROFIT MANHOLE INSTALLATION.

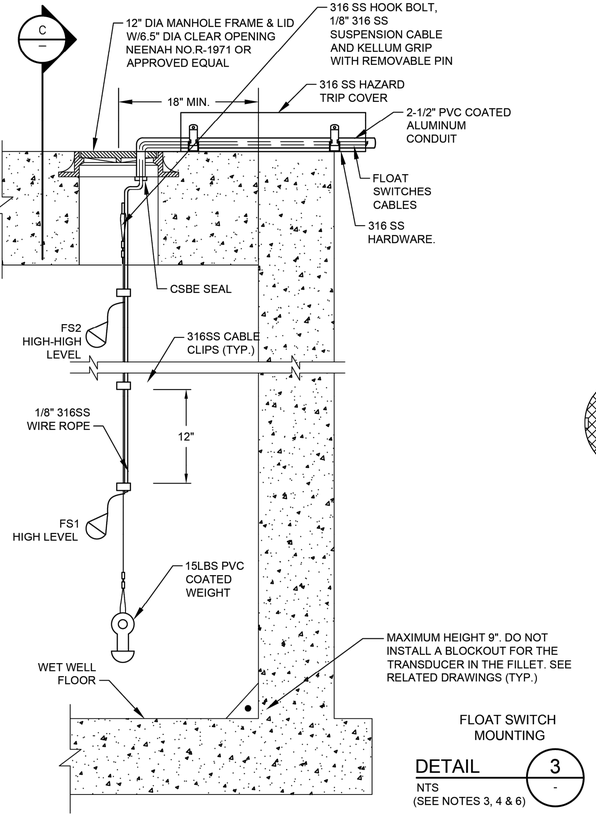

FLOAT SWITCH MOUNTING

DETAIL 3
NTS
(SEE NOTES 3, 4 & 6)

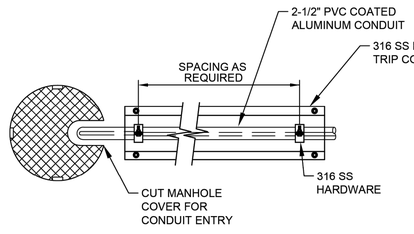

FLOAT SWITCH MOUNTING
TOP VIEW

DETAIL 4
NTS
(SEE NOTES 3, 4 & 6)

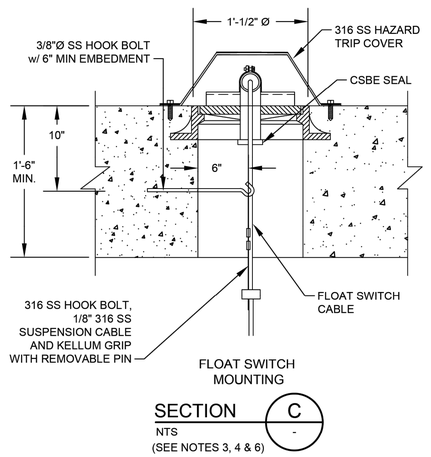

FLOAT SWITCH
MOUNTING

SECTION C
NTS
(SEE NOTES 3, 4 & 6)

NO.	DATE	REVISION	APP.

FOR INTERIM REVIEW
ONLY NOT INTENDED FOR
PERMIT, BIDDING OR
CONSTRUCTION PURPOSES.
ENGINEER:
HOSS FOROUZAN
P.E. SERIAL NO.77748
05/18/2026

GAI
Gupta & Associates, Inc.
CONSULTING ENGINEERING
Registration No. F-2593
302 Dennis St.,
Houston, Texas 77006
Tel: 713-636-2936
Fax: 713-636-2987
email: hforouzan@gaiconsulting.com

IDS Engineering Group
13430 NW. Freeway
Suite 700
Houston, Tx. 77040
713.462.3178
TxEng Firm 2726
TxSurv Firm 10110700

CITY OF HOUSTON
HOUSTON PUBLIC WORKS

LIFT STATION RENEWAL AND REPLACEMENT FY 2023

ELECTRICAL – RADAR LEVEL TRANSMITTER GAUGING SYSTEM INSTALLATION & DETAILS–I

WBS NUMBER	FOR CITY OF HOUSTON USE ONLY
R–000267–0179–4	
DRAWING SCALE	
HORIZ: NTS VERT: NTS	
CITY OF HOUSTON PM	
NAWARAJ PANTA, P.E.	
DWG. NO. E–03	SHEET NO. 340 OF 361

IDS JOB No. 0057-085-00

FILE PATH: O:\H8108_Lift Station Rehabilitation And Reconstruction (IDS)\6 Drawings\Electrical\1Working\General\H8108_E–03.dwg

PLOTTED: 5/12/2026 8:19 PM

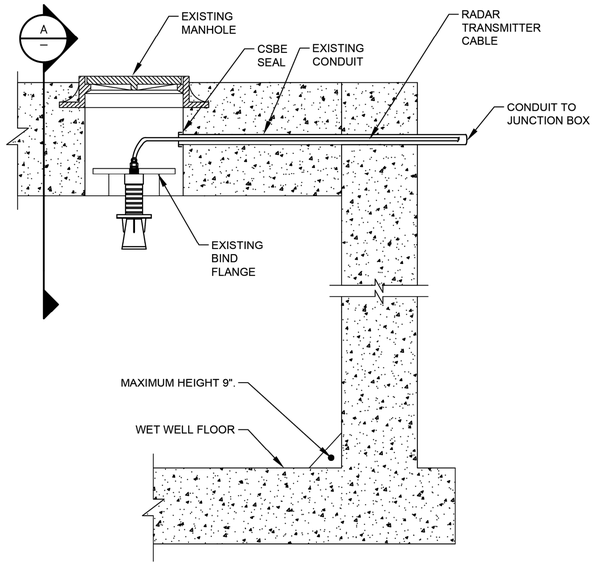

RADAR LEVEL TRANSMITTER MOUNTING
(TYP. LT-1, LT-2)

DETAIL 1
NTS
(SEE NOTES 1, 2, 4, 6 & 7)

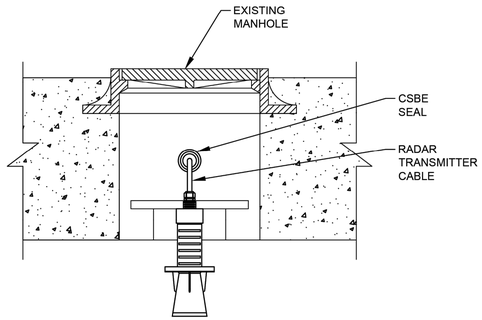

RADAR LEVEL TRANSMITTER MOUNTING
TYP. LT-1 & LT-2

SECTION A
NTS
(SEE NOTES 1, 2, 4, 6 & 7)

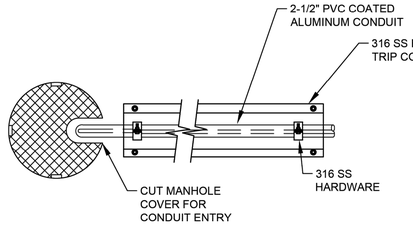

FLOAT SWITCH MOUNTING
TOP VIEW

DETAIL 4
NTS
(SEE NOTES 1, 4, 5 & 6)

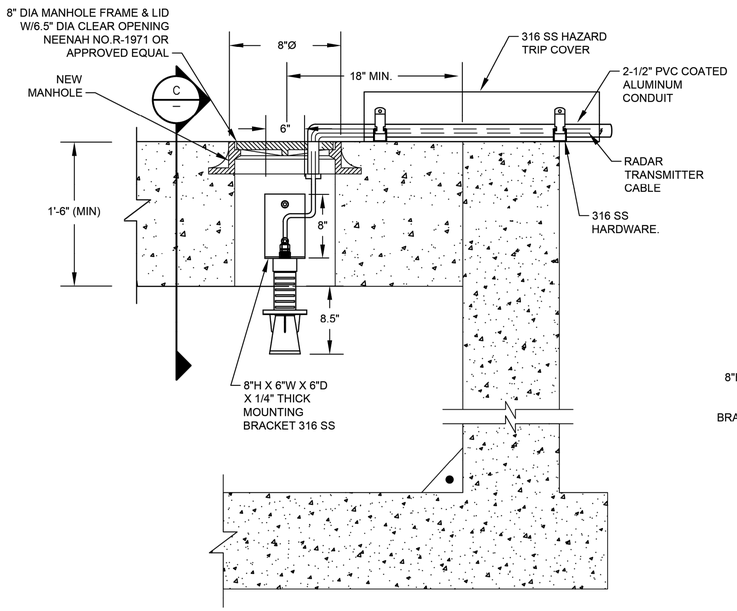

RADAR LEVEL TRANSMITTER MOUNTING
(TYP. LT-1, LT-2)

DETAIL 3
NTS
(SEE NOTES 1, 4, 5 & 6)

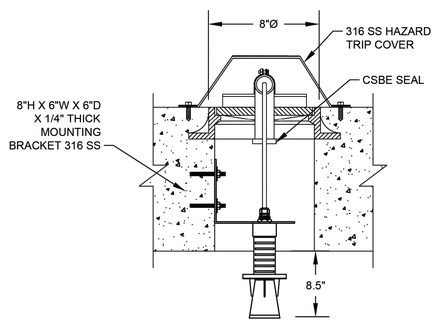

RADAR LEVEL TRANSMITTER MOUNTING
TYP. LT-1 & LT-2

SECTION C
NTS
(SEE NOTES 1, 4, 5 & 6)

NOTES:

1. NEW RADAR LEVEL TRANSMITTERS FOR LT-1, LT-2.
2. EXISTING AIRCELL MANHOLES FOR RADAR LEVEL TRANSMITTERS LT-1, LT-2.
3. EXISTING SUBMERSIBLE TRANSDUCER MANHOLES FOR RADAR LEVEL TRANSMITTERS LT-1, LT-2.
4. PAINT MANHOLE LIDS AND HATCHES HUNTER GREEN.
5. NEW MANHOLE INSTALLATION.
6. RETROFIT MANHOLE INSTALLATION.
7. DEMOLISH ALL EQUIPMENT ASSOCIATED WITH AIRCELL INSIDE THE WETWELL.

NO.	DATE	REVISION	APP.

FOR INTERIM REVIEW
ONLY NOT INTENDED FOR
PERMIT, BIDDING OR
CONSTRUCTION PURPOSES.
ENGINEER:
HOSS FOROUZAN
P.E. SERIAL NO.77748
05/18/2026

GAI
Gupta & Associates, Inc.
CONSULTING ENGINEERING
Registration No. F-2593
302 Dennis St.,
Houston, Texas 77006
Tel: 713-636-2936
Fax: 713-636-2987
email: hforouzan@gaiconsulting.com

IDS Engineering Group
13430 NW. Freeway
Suite 700
Houston, Tx. 77040
713.462.3178
TxEng Firm 2726
TxSurv Firm 10110700

CITY OF HOUSTON
HOUSTON PUBLIC WORKS

LIFT STATION RENEWAL AND REPLACEMENT FY 2023

ELECTRICAL – RADAR LEVEL TRANSMITTER GAUGING SYSTEM INSTALLATION & DETAILS–II

WBS NUMBER	FOR CITY OF HOUSTON USE ONLY
R–000267–0179–4	
DRAWING SCALE	
HORIZ: NTS VERT: NTS	
CITY OF HOUSTON PM	
NAWARAJ PANTA, P.E.	
SHEET NO. 341 OF 361	

DWG. NO. E–04

IDS JOB No. 0057-085-00

FILE PATH: O:\H8108_Lift Station Rehabilitation And Reconstruction (IDS)\6 Drawings\Electrical\Working\General\H8108_E–04.dwg

PLOTTED: 5/12/2026 8:19 PM

ELECTRICAL GENERAL NOTES

1. THE NOTES CONTAINED ON THIS SHEET ARE PROVIDED FOR THE CONVENIENCE OF THE CONTRACTOR WHEN WORKING IN THE FIELD, AND CONTAIN EXCERPTS FROM THE SPECIFICATION SECTIONS. HOWEVER THE CONTRACTOR IS HEREBY ADVISED THAT THE CONTRACT DOCUMENTS CONSIST OF BOTH THE DRAWINGS AND THE SPECIFICATIONS, AND THAT THE CONTRACTOR MUST COMPLY FULLY WITH BOTH THE BOUND DRAWINGS AND THE BOUND SPECIFICATIONS.

2. ALL EQUIPMENT WIRING, RACEWAYS, ETC. SHALL BE INSTALLED AND GROUNDED IN ACCORDANCE WITH THE LATEST EDITION OF THE NATIONAL ELECTRICAL CODE, LOCAL CODES, AND INDUSTRY STANDARDS (IE. UL, NEMA, IEEE, ANSI, ETC.) THE DRAWING NOTES AND DETAILS SHALL BE COMPLIED WITH IN ADDITION TO THE REQUIREMENTS IN THE SPECIFICATIONS. REFER TO EACH SPECIFICATION SECTION FOR SPECIFIC REQUIREMENTS.

3. ALL RACEWAY INSTALLATIONS SHALL BE INSTALLED IN A MANNER TO PREVENT CONFLICTS WITH EQUIPMENT AND STRUCTURAL CONDITIONS. ALL EXPOSED RACEWAY SHALL BE INSTALLED PARALLEL TO BEAMS, CEILINGS, FLOORS AND WALLS. SEE SPECIFICATION ON RACEWAYS FOR ADDITIONAL REQUIREMENTS.

4. CONDUITS SHALL BE TERMINATED IN A NEAT MANNER AND STRICTLY IN ACCORDANCE WITH THE SPECIFICATIONS AND DRAWING DETAILS.

5. CONDUITS TERMINATED INTO ENCLOSURES SHALL BE PERPENDICULAR TO THE WALLS OF THE ENCLOSURE. THE USE OF SHORT SEALTIGHT ELBOW FITTINGS FOR SUCH TERMINATIONS IS NOT PERMITTED.

6. ALL RACEWAY INSTALLATIONS, CROSSING EXPANSION JOINTS OR TRANSITIONS FROM BELOW GRADE TO EXPOSED ABOVE GRADE, SHALL HAVE EXPANSION OR EXPANSION/DEFLECTION TYPE FITTINGS AS SPECIFIED FOR THE APPLICATION. SEE THE DRAWINGS AND THE SPECIFICATION ON RACEWAYS FOR THE EXACT TYPE OF FITTING TO BE USED.

7. NO CONDUIT SMALLER THAN 3/4", NOR WIRE SMALLER THAN NO. 12 AWG, SHALL BE USED UNLESS SPECIFICALLY NOTED.

8. ALL UNDERGROUND SINGLE CONDUITS AND DUCTBANKS OF MULTIPLE CONDUITS SHALL BE RIGID PVC CONDUIT ENCASED IN REINFORCED RED CONCRETE. CONCRETE DYED RED BEFORE PLACEMENT. MINIMUM SIZE IS 2 INCH. FIELD VERIFY THE ROUTING OF ALL EXISTING UNDERGROUND CONDUIT AND DUCTBANKS. COORDINATE ROUTING OF NEW CONDUIT AND DUCTBANKS TO AVOID INTERFERENCE WITH EXISTING CONDUIT, DUCTBANKS, AND OTHER UNDERGROUND UTILITIES.

9. ALL CHANGES OF DIRECTION GREATER THAN 20 DEGREES IN UNDERGROUND SINGLE, OR DUCTBANKS OF MULTIPLE CONDUITS, SHALL BE ACCOMPLISHED USING PVC COATED RIGID ALUMINUM LONG RADIUS BENDS. BENDS OF PVC CONDUIT GREATER THAN 20 DEGREES, OR THE USE OF FLEXIBLE CONDUIT OF ANY TYPE, WILL NOT BE PERMITTED. SEE THE SPECIFICATIONS FOR MORE REQUIREMENTS.

10. LIQUID TIGHT FLEXIBLE ALUMINUM CONDUIT SHALL BE USED FOR THE PRIMARY AND SECONDARY OF TRANSFORMERS, GENERATOR TERMINATIONS AND OTHER EQUIPMENT WHERE VIBRATION IS PRESENT. USE IN OTHER LOCATIONS IS NOT PERMITTED, EXCEPT FOR CONNECTIONS TO INSTRUMENTATION TRANSMITTERS, WHERE MULTIPLE PENETRATIONS ARE REQUIRED. LIQUID TIGHT FLEXIBLE ALUMINUM CONDUIT SHALL HAVE A MAXIMUM LENGTH NOT GREATER THAN THAT OF A FACTORY MANUFACTURED LONG RADIUS ELBOW OF THE CONDUIT SIZE BEING USED. THE MAXIMUM BENDING RADIUS SHALL NOT BE LESS THAN THAT SHOWN IN THE NEC CHAPTER 9, TABLE 2, "OTHER BENDS". BX OR AC TYPE PREFABRICATED CABLES WILL NOT BE PERMITTED.

11. THE WIRING DIAGRAMS, BLOCK DIAGRAMS, QUANTITY/SIZES OF WIRES/CONDUITS REPRESENT A SUGGESTED ARRANGEMENT BASED UPON SELECTED STANDARD COMPONENTS OF ELECTRICAL EQUIPMENT. MODIFICATIONS ACCEPTABLE TO THE ENGINEER MAY BE MADE BY THE CONTRACTOR TO ACCOMMODATE EQUIPMENT ACTUALLY APPROVED. ALL MODIFICATIONS SHALL BE SUBMITTED TO THE ENGINEER FOR APPROVAL. THE BASIC SEQUENCE AND METHOD OF CONTROL MUST BE MAINTAINED AS INDICATED ON THE DRAWINGS AND/OR SPECIFIED.

12. ALL JUNCTION BOXES, PULL BOXES AND TERMINATION BOXES IN NEMA 12 AREAS SHALL BE ALUMINUM. FOR NEMA 4X AREAS SEE SPECIFICATIONS FOR BOX DETAILS AND SPECIFICATIONS.

13. SEAL ALL RACEWAYS ENTERING JUNCTION BOXES OR CONTROL PANELS CONTAINING ELECTRICAL OR INSTRUMENTATION EQUIPMENT WITH WATERTIGHT SEALANT. REFER TO THE SPECIFICATIONS FOR DETAILS.

14. ALL EQUIPMENT AND ELECTRICAL EQUIPMENT ENCLOSURE LOCATIONS, OR TERMINAL BOX LOCATIONS, ARE APPROXIMATE. THE EXACT LOCATIONS SHALL BE COORDINATED WITH AND APPROVED BY THE OWNER/ENGINEER, DURING CONSTRUCTION, AT NO ADDITIONAL COST TO THE OWNER.

15. ALL EQUIPMENT AND ELECTRICAL EQUIPMENT ENCLOSURES DIMENSIONS ARE APPROXIMATE. ALL EQUIPMENT AND ELECTRICAL EQUIPMENT ENCLOSURES OR TERMINAL BOX DIMENSIONS SHALL BE VERIFIED WITH THE EQUIPMENT SUPPLIER. ALLOW FOR LOCATION CHANGES AND INCLUDE IN THE CONTRACT PRICE. THE EXACT LOCATIONS OF ALL ELECTRICAL EQUIPMENT AND ROUTING OF ALL CABLES AND CONDUITS SHALL BE COORDINATED WITH AND APPROVED BY THE OWNER/ENGINEER DURING CONSTRUCTION.

16. CORING OF AN EXISTING STRUCTURE SHALL BE COORDINATED WITH AND APPROVED BY THE OWNER/ENGINEER. CORING THROUGH STRUCTURAL BEAMS IS STRICTLY PROHIBITED WITHOUT PRIOR WRITTEN APPROVAL FROM THE OWNER/ENGINEER.

17. THE LOCATION OF ALL ELECTRICAL EQUIPMENT AND ROUTING OF CABLES AND CONDUITS SHALL BE COORDINATED AND APPROVED BY THE OWNER.

18. THE DUCTBANK ROUTING AS SHOWN ON THE DRAWING IS APPROXIMATE. FIELD VERIFY THE EXACT DUCTBANK ROUTING, CABLE LENGTH AND CONDUIT LENGTH.

19. PROVIDE CONDUIT SEALS FOR CONDUIT PENETRATIONS AS PER NEC AND NFPA820.

20. COORDINATE ALL WORK WITH THE OWNER.

21. LOCATE ALL UNDERGROUND UTILITIES BEFORE DIGGING. COORDINATE THE EFFORT WITH THE OWNER.

22. ALL SLOTTED CHANNEL, SLOTTED CHANNEL SUPPORT MATERIAL, WASHERS, SCREWS, NUTS, CONDUIT CLAMPS, ALL THREAD SPRING NUTS AND MISC. MOUNTING HARDWARE SHALL BE 316 STAINLESS STEEL.

23. LIGHTING FIXTURES SHALL BE MOUNTED ACCORDING TO THE MOUNTING HEIGHT GIVEN ON THE DRAWINGS. THE MOUNTING HEIGHT SHALL BE MEASURED FROM THE BOTTOM OF THE LIGHTING FIXTURE TO THE FINISHED FLOOR.

24. CONDUIT AND WIRE FOR THE HVAC EQUIPMENT AND MISCELLANEOUS DEVICES SHALL BE:

    A. 3/4" (MIN) RIGID ALUMINUM.

    B. NO.14 XHHW CU. WIRE XHHW (MIN.).

    C. IN ACCORDANCE WITH ALL ELECTRICAL AND HVAC SPECIFICATIONS REQUIREMENTS.

25. CONDUITS AND WIRES SHOWN ON THE INTERFACE DIAGRAM SHALL BE INSTALLED BY THE CONTRACTOR. GROUPING OF CONDUIT AND WIRE MAY BE CHANGED, IF APPROVED BY THE ENGINEER AND OWNER.

26. ALL CONDULETS SHALL BE FORM 7 AND SHALL HAVE 316 SS CLAMP COVERS WITH 316 SS CLAMPS AND SCREWS. SCREW DOWN COVERS ARE UNACCEPTABLE. REFER TO THE SPECIFICATIONS FOR MORE INFORMATION.

27. ALL BARE COPPER GROUNDING CONDUCTORS SHALL BE TINNED, ALL GROUND RODS SHALL BE 3/4" BY 10' LONG. ALL EXPOSED COPPER GROUND CABLES SHALL BE GREEN INSULATED CONDUCTORS. PROVIDE XHHW INSULATION.

28. WHERE NOTES ON THE DRAWING INDICATE THAT THE CONTRACTOR SHALL FIELD-VERIFY, THE INTENT IS FOR THE CONTRACTOR TO INVESTIGATE TO THE EXTENT NECESSARY TO PROVIDE THE WORK AND MATERIALS PRIOR TO BIDDING AND INCLUDE ALL COSTS IN THE BID PRICE. THE CONTRACT PRICE SHALL NOT BE INCREASED WHEN THE CONTRACTOR HAS NOT INVESTIGATED PER THE NOTES DIRECTING THAT BE DONE.

TYPICAL ENCLOSURE TYPES BY AREA TYPE

NON-HAZARDOUS AREAS	BOXES & ENCLOSURES 1	3R	4X	4X*	12	CONDUIT
OUTDOOR; GENERAL AREAS		X	X			PVC COATED ALUMINUM
OUTDOOR; CHEMICAL AREAS				X		SCHEDULE 80 PVC
INDOOR; CHEMICAL ROOM				X		SCHEDULE 80 PVC
INDOOR; CONDITIONED SPACE					X	RIGID ALUMINUM
INDOOR; NON-CONDITIONED SHOP SPACE					X	RIGID ALUMINUM
INDOOR; NON-CONDITIONED PROCESS AREA			X			RIGID ALUMINUM
INDOOR, ADMIN BUILDING	X					EMT/RIGID ALUMINUM
CLASS I, DIVISION 1	REFER TO NEC, NFPA-820, AND CONTRACT CONSTRUCTION SPECIFICATIONS					
CLASS I, DIVISION 2	REFER TO NEC, NFPA-820, AND CONTRACT CONSTRUCTION SPECIFICATIONS					

GENERAL NOTES:

- EQUIPMENT SUCH AS MOTOR CONTROL CENTER, SWITCHGEAR, VFDS, AND OTHER STAND-ALONE MOTOR STARTERS ARE TO BE SPECIFIED UNIQUELY.
- NEMA 1 ENCLOSURES ARE TO BE NEMA 1 GASKETED.
- NEMA 4X* ENCLOSURES ARE TO BE NON-METALLIC (ie PVC) NEMA 4X
- CONDUIT INSIDE ADMIN BUILDING LOCATION IS TO BE EMT IF CONCEALED IN DRY WALL (AKA SHEET ROCK WALL): OTHERWISE RIGID ALUMINUM.
- OUTDOOR GENERAL AREAS COULD BE 3R OR 4X DEPENDING ON OWNER PREFERENCE AND WHETHER WTP OR WWTP - REFER TO DRAWINGS.

CONDUIT TYPE	LOCATION
RIGID GALVANIZED CONDUIT	NOT ACCEPTABLE FOR USE ON THIS PROJECT EXCEPT FOR THE UTILITY COMPANY'S CONDUCTORS. ALL UTILITY COMPANY'S DUCTS SHALL BE AS SPECIFIED BY UTILITY COMPANY.
PVC COATED ALUMINUM CONDUIT	ALL EMBEDDED CONDUIT BENDS, UNDERGROUND DUCTBANK OF MORE THAN 20 DEGREES, AND ALL CONDUIT STUB-UPS TO A MINIMUM OF 6" ABOVE FINISHED FLOOR OR GRADE AND IN CHLORINE AND CAUSTIC ROOMS.
LIQUID TIGHT FLEXIBLE ALUMINUM CONDUIT	RACEWAY CONNECTION TO VIBRATING EQUIPMENT ONLY, IN ALL AREAS.
RIGID NON-METALLIC, SCHEDULE 40 PVC CONDUIT	UNDERGROUND ENCASED IN RED DYE REINFORCED CONCRETE. (AS WHERE SPECIFIED)
RIGID NON-METALLIC, SCHEDULE 80 PVC CONDUIT	FOR USE IN CHLORINE AND CAUSTIC ROOMS, AND UNDERGROUND. ENCASED IN RED DYED REINFORCED CONCRETE. (AS WHERE SPECIFIED)
FLEXIBLE ALUMINUM CONDUIT	FIXTURE WHIP CONNECTION TO LIGHTING FIXTURES IN NEMA 12 AREAS (MAXIMUM 3-FT). BX OR AC TYPE PREFABRICATED CABLES ARE NOT PERMITTED.
ALUMINUM RIGID METAL CONDUIT	ALL ABOVE GRADE AREAS, EXCEPT FOR CONCRETE EMBEDDED AND THOSE AREAS ALREADY DESCRIBED IN THIS TABLE
ELECTRIC METALLIC TUBING (EMT) CONDUIT	FOR USE ONLY ON CONCEALED, ABOVE GROUND, INTERIOR ELECTRICAL WIRING IN AIR-CONDITIONED ADMINISTRATIVE BUILDINGS REMOTE TO THE PROCESS AREA, AND CLEARLY DEFINED AS SUCH ON THE DRAWINGS OR IN THE SPECIFICATIONS.

ELECTRICAL DEMOLITION NOTES

1. COORDINATE THE DEMOLITION OF ELECTRICAL CONDUIT, WIRE, EQUIPMENT AND DEVICES WITH THE GENERAL DEMOLITION AND SCHEDULE. THE DRAWINGS ARE INTENDED TO CONVEY THE GENERAL NATURE AND SCOPE OF THE DEMOLITION WORK. EVERY ITEM TO BE DEMOLISHED MAY NOT BE SHOWN. FIELD VERIFY, AND INCLUDE ALL DEMOLITION WORK IN THE CONTRACT PRICE.

2. PROVIDE TEMPORARY WIRE AND CONDUIT FOR THE EQUIPMENT WHICH MAY BE AFFECTED BY THE DEMOLITION BUT TO REMAIN IN SERVICE.

3. RELOCATE AND RECONNECT POWER AND CONTROL RACEWAYS AND CONDUCTORS TO EQUIPMENT AFFECTED BY DEMOLITION WORK.

4. ALL CONDUCTORS BEING DEMOLISHED SHALL BE DISCONNECTED AND REMOVED FROM THE LOAD TO THE SOURCE. SURFACE MOUNTED CONDUITS AND MOUNTING HARDWARE SHALL BE REMOVED. UNDERGROUND CONDUITS WHICH ARE NOT BEING REMOVED OR OTHERWISE NOT BEING MADE UNUSABLE SHALL BE CAPPED AND TAGGED AS SPARE, WITH INFORMATION CLEARLY INDICATING THE LOCATION OF THE OTHER END.

5. ALL SURFACES WHERE DEMOLISHED EQUIPMENT OR CONDUIT IS REMOVED SHALL BE CLEANED, PATCHED AND PAINTED TO MATCH THE SURROUNDING SURFACE.

6. CHECK THE FUNCTION OF EACH CONDUCTOR BEFORE REMOVING OR DISCONNECTING.

7. IF A CONDUCTOR WHICH HAS TO STAY IN SERVICE (NOT BEING DEMOLISHED) IS INSTALLED IN A COMMON CONDUIT WITH CONDUCTORS WHICH ARE BEING DEMOLISHED, THE CONTRACTOR SHALL REMOVE ALL CONDUCTORS FROM THE CONDUIT, PROVIDE NEW CONDUCTORS WHICH ARE REPLACEMENTS FOR THE CONDUCTORS THAT ARE TO REMAIN IN SERVICE AND RE-INSTALL THE NEW CONDUCTORS. AFTER THE CONDUCTORS ARE PULLED, MEGGER OR VFL TEST EACH CONDUCTOR. CONNECT BOTH ENDS OF THE NEW CONDUCTORS AND TEST THE SYSTEM FOR PROPER FUNCTION. DO NOT RE-PULL USED CONDUCTORS UNLESS SPECIFIED.

8. WHERE EQUIPMENT IS BEING RE-FED FROM A NEW SOURCE, EXISTING CONDUIT MAY BE REUSED ONLY IF THE CONDUIT AND FITTINGS ARE OF THE TYPE SPECIFIED FOR NEW WORK ON THIS CONTRACT. IF NOT, THE CONDUIT AND CONDUCTORS SHALL BE REPLACED WITH NEW MATERIAL MEETING THE SPECIFICATIONS, AT NO ADDITIONAL COST TO THE OWNER.

9. THE CONTRACTOR SHALL COORDINATE WITH THE OWNER/ENGINEER TO FLAG EXISTING UNDERGROUND CONDUITS BEFORE DIGGING.

10. THE OWNER HAS THE RIGHT OF FIRST REFUSAL TO THE EQUIPMENT BEING REMOVED. THE CONTRACTOR SHALL DELIVER THE EQUIPMENT WHICH THE OWNER WISHES TO KEEP AT A LOCATION DESIGNATED BY THE OWNER. SEE SPECIFICATIONS.

11. DO NOT MAKE ANY MODIFICATIONS TO THE EXISTING ELECTRICAL EQUIPMENT UNTIL THE FOLLOWING HAS BEEN DONE:

    A. THE OWNER/CONTRACTOR SHALL WITNESS AND RECORD THE CONDITION OF THE EXISTING EQUIPMENT, THE CONTRACTOR SHALL NOTE DOWN ANY DEFECTS OR DEFICIENCIES.

    B. THE OWNER SHALL OPERATE THE EQUIPMENT TO DEMONSTRATE THE CURRENT CONDITIONS. THE CONTRACTOR SHALL NOTE DOWN ANY DEFECTS OR DEFICIENCIES.

    C. A WRITTEN AND PHOTOGRAPHIC RECORD OF THE OPERATION AND EXISTING CONDITION SHALL BE KEPT IN A THREE RING BINDER AT THE OWNER/CONTRACTOR TRAILER, IN FORM OF PICTURES AND INFORMATION.

    D. A FORM SHALL BE GENERATED BY THE CONTRACTOR TO RECORD THE OBSERVATIONS. BOTH PARTIES SHALL SIGN ON THE FORM.

    E. REPLACE ALL MATERIAL OR EQUIPMENT DAMAGED DURING THE COURSE OF WORK.

    F. AFTER THE CHANGES ARE MADE, THE EQUIPMENT SHALL BE INSPECTED AND RE-TESTED TO DEMONSTRATE THAT IT FUNCTIONS CORRECTLY.

    G. NO PORTION OF EXISTING CONDUCTORS SHALL BE SPLICED TO NEW CONDUCTORS FOR RE-USE WITHOUT SPECIFIC APPROVAL FROM THE OWNER/ENGINEER ON A CASE-BY-CASE BASIS.

MCC, CONTROL PANELS, PANELBOARDS

THESE NOTES APPLY TO CONTROL PANELS, MCC ETC WHICH HAS TO BE REFURBISHED, MODIFIED, DISCONNECTED & RECONNECTED OR REWORKED. SEE SECTION 16060:

THE CONTRACTOR SHALL NOT MAKE ANY MODIFICATION UNTIL THE FOLLOWING HAS BEEN DONE:

A. THE OWNER/CONTRACTOR SHALL WITNESS THE CONDITION OF THE EXISTING EQUIPMENT, THE CONTRACTOR SHALL NOTE DOWN ANY DEFECTS OR DEFICIENCY.

B. THE OWNER SHALL OPERATE THE EQUIPMENT TO DEMONSTRATE THE CURRENT CONDITIONS. THE CONTRACTOR SHALL NOTE DOWN ANY DEFECTS OR DEFICIENCIES.

C. A RECORD OF THE OPERATION AND EXISTING CONDITION SHALL BE KEPT IN A THREE RING BINDER AT THE OWNER/CONTRACTOR TRAILER, IN FORM OF PICTURES AND INFORMATION.

D. A FORM SHALL BE GENERATED BY THE CONTRACTOR TO RECORD THE OBSERVATIONS. BOTH PARTIES SHALL SIGN ON THE FORM.

E. REPLACE ALL MATERIAL OR EQUIPMENT DAMAGED DURING THE COURSE OF WORK.

F. AFTER THE CHANGES ARE MADE, THE EQUIPMENT SHALL BE INSPECTED AND RE-TESTED TO DEMONSTRATE THAT IT FUNCTIONS CORRECTLY.

NO.	DATE	REVISION	APP.

FOR INTERIM REVIEW
ONLY NOT INTENDED FOR
PERMIT, BIDDING OR
CONSTRUCTION PURPOSES.
ENGINEER:
HOSS FOROUZAN
P.E. SERIAL NO.77748
05/18/2026

GAI
Gupta & Associates, Inc.
CONSULTING ENGINEERING
Registration No. F-2593
302 Dennis St.,
Houston, Texas 77006
Tel: 713-636-2936
Fax: 713-636-2987
email: hforouzan@gaiconsulting.com

IDS Engineering Group
13430 NW. Freeway
Suite 700
Houston, Tx. 77040
713.462.3178
TxEng Firm 2726
TxSurv Firm 10110700

CITY OF HOUSTON
HOUSTON PUBLIC WORKS

LIFT STATION RENEWAL
AND REPLACEMENT FY 2023

ELECTRICAL –
GENERAL NOTES

WBS NUMBER	FOR CITY OF HOUSTON USE ONLY
R–000267–0179–4	
DRAWING SCALE	
HORIZ: NONE VERT: NONE	
CITY OF HOUSTON PM	
NAWARAJ PANTA, P.E.	
SHEET NO. 342 OF 361	

DWG. NO. G–07

FILE PATH: O:\H8108_Lift Station Rehabilitation And Reconstruction (IDS)\6 Drawings\Electrical\Working\General\H8108_G–07.dwg

IDS JOB No. 0057-085-00

PLOTTED: 5/12/2026 8:19 PM

SYMBOLS	DESCRIPTION
52 CS	MEDIUM VOLTAGE DRAWOUT TYPE POWER CIRCUIT BREAKER CS-CONTROL SWITCH
(E.O.) FRAME TRIP	LOW VOLTAGE CIRCUIT BREAKER, 3 POLE UNLESS OTHERWISE NOTED. LSIG IF NOTED MCP IF NOTED ERMS IF NOTED
✳ OR	COMBINATION MOTOR CIRCUIT PROTECTOR AND MAGNETIC MOTOR STARTER, FULL VOLTAGE NON-REVERSING UNLESS OTHERWISE NOTED: ✳ FVR-FULL VOLTAGE REVERSING RVNR-REDUCED VOLTAGE NON-REVERSING 2S1W-TWO SPEED, ONE WINDING 2S2W-TWO SPEED, TWO WINDING
✳ OR	NON-FUSIBLE DISCONNECT SWITCH, 600 VOLT, 3 POLE ✳ AMPERE RATING NOTED IF OTHER THAN 30A
✳ ✸ OR F	FUSIBLE DISCONNECT SWITCH, 600 VOLT, 3 POLE, AMPERE RATING AND FUSE SIZE AS NOTED: ✳ AMPERE RATING NOTED IF OTHER THAN 30A ✸ FUSE RATING
MIS OR I	MOTOR ISOLATION SWITCH, HORSEPOWER RATED
	DRAWOUT TYPE EQUIPMENT OR DEVICE
	MEDIUM VOLTAGE CABLE TERMINATION
	MEDIUM VOLTAGE AIR INTERRUPTER SWITCH
	MEDIUM VOLTAGE FUSED AIR INTERRUPTER SWITCH
	MEDIUM VOLTAGE FUSED MOTOR CONTROLLER
30KVA 480V- 120/208Y K-*	TRANSFORMER, RATINGS AND CONNECTIONS AS NOTED. UNLESS OTHERWISE NOTED ON THE SINGLE LINE DIAGRAMS ALL DRY TYPE TRANSFORMERS SERVICING ADMINISTRATIVE AND LABORATORY SPACES SHALL HAVE A K FACTOR OF 13. ALL OTHER DRY TYPE TRANSFORMERS SHALL HAVE A K-4 RATING. ISOLATION TRANSFORMERS SHALL HAVE A K-20 RATING
✳ A:5	CURRENT TRANSFORMER: ✳ QUANTITY A= PRIMARY AMPERES
✳ PV-SV	POTENTIAL TRANSFORMER: ✳ QUANTITY PV= PRIMARY VOLTAGE SV= SECONDARY VOLTAGE
	GENERATOR, RATINGS AND CONNECTIONS AS NOTED
100A ATS-1 N S	TRANSFER SWITCH AUTOMATIC TRANSFER SWITCH (EG ATS-1) MANUAL TRANSFER SWITCH (EG MTS-1) "N" INDICATES NORMAL SOURCE "S" INDICATES STANDBY SOURCE 100A INDICATES CONTINUOUS CURRENT RATING
✳	VARIABLE SPEED DRIVE CONTROLLER ✳ D.C.= D.C. DRIVE CONTROLLER SCR= SILICON CONTROLLED RECTIFIER VFD= VARIABLE FREQUENCY DRIVE AFD= ADJUSTABLE FREQUENCY DRIVE
	VACUUM CONTACTOR
5KW OR E	UNIT HEATER - ELECTRIC HEATING COIL AND FAN
5KW OR U	UNIT HEATER - STEAM OR WATER HEATING COIL AND FAN
M	MOTOR, NUMERAL INDICATES HORSEPOWER
SPD	SURGE PROTECTION DEVICE
VFD	VARIABLE FREQUENCY DRIVE

SYMBOLS	DESCRIPTION
VM ✳	VOLTMETER (WITH SWITCH IF 3-PHASE)
AM ✳	AMMETER (WITH SWITCH IF 3-PHASE)
*	METER ✳ WM- WATTMETER WHM- WATTHOUR METER WHDM- WATTHOUR DEMAND METER WHDR- WATTHOUR DEMAND RECORDER PF- POWER FACTOR METER RT- RUNNING TIME METER TRANSDUCER AX- CURRENT TRANSDUCER WX- WATT TRANSDUCER
#	RELAY, NO. AS INDICATED 25- SYNCHRONISM CHECK RELAY 27- UNDER VOLTAGE RELAY 38- BEARING PROTECTIVE DEVICE 40- LOSS OF EXCITATION RELAY 42- RUNNING CONTACTOR/PILOT RELAY 46- REVERSE PHASE/PHASE BALANCE/CURRENT RELAY 47- PHASE SEQUENCE VOLTAGE RELAY 49- MACHINE OR TRANSFORMER THERMAL RELAY 50- INSTANTANEOUS OVERCURRENT RELAY 50G- INSTANTANEOUS GROUND 51- TIME OVER CURRENT RELAY 51G- TIME OVERCURRENT RELAY, GROUNDING RESISTOR TYPE 51N- TIME OVERCURRENT RELAY, RESIDUAL TYPE 51V- TIME OVERCURRENT RELAY WITH VOLTAGE RESTRAINT 60- NEGATIVE SEQUENCE VOLTAGE RELAY 62- TIME DELAY RELAY 63- OVER PRESSURE RELAY 67- AC DIRECTIONAL OVERCURRENT RELAY 83- AUTOMATIC SELECTIVE CONTROL OR TRANSFER RELAY 86- LOCKING-OUT RELAY 87- DIFFERENTIAL PROTECTIVE RELAY B- SUFFIX INDICATES "BUS" G- SUFFIX INDICATES "GENERATOR" GF- GROUND FAULT ST- SHUNT TRIP T- SUFFIX INDICATES "TRANSFORMER" X- SUFFIX INDICATES "AUXILIARY"
*	SPECIAL CAPACITOR ✳ SC- SURGE CAPACITOR PF- POWER FACTOR CORRECTION CAPACITOR INCLUDING INDUCTIVE LINK AS NEEDED
	PUSH BUTTON, MOMENTARY CONTACT, SPRING RETURN, NORMALLY CLOSED
	PUSH BUTTON, MOMENTARY CONTACT, SPRING RETURN, NORMALLY OPEN
E-STOP	EMERGENCY STOP PUSH BUTTON WITH RED MUSHROOM HEAD OPERATOR (MAINTAINED CONTACT)
✳ N	STOP PUSH BUTTON WITH RED HEAD OPERATOR (MAINTAINED CONTACT) WITH LOCKABLE OPTION ✳ : E-STOP ✳ : STOP
STOP START	START-STOP PUSH BUTTON CONTROL STATION (MOMENTARY CONTACT) "L" DENOTES LOCKOUT TYPE
STOP START	START-STOP PUSH BUTTON CONTROL STATION, MAINTAINED CONTACT WITH LOCKOUT DEVICE ON STOP
OFF ON	OFF/ON SELECTOR SWITCH
A B C ✳ (XOO) (OOX)	3 POSITION SELECTOR SWITCH, MAINTAINED CONTACT O-OPEN X-CLOSED ✳ NAMEPLATE (A/B/C) HOA- HAND/OFF/AUTO HOR- HAND/OFF/REMOTE LOR- LOCAL/OFF/REMOTE RSL- RAISE/STOP/LOWER TOA- TEST/OFF/AUTO NOTE: 2 POSITION MULTI-CONTACT SWITCH FOLLOWS SAME CONVENTION

POSITION	TOP CONTACT	MIDDLE CONTACT	BOTTOM CONTACT
A	X	O	O
B	0	0	O
C	0	O	X

SYMBOLS	DESCRIPTION
M #	MOTOR STARTER COIL, NUMBER AS INDICATED
CR #	CONTROL RELAY COIL, NUMBER AS INDICATED
	RVSS: REDUCED VOLTAGE STATIC SOLID SOFT STARTER

SYMBOLS	DESCRIPTION
*	PILOT LIGHT, COLOR AS NOTED ✳ R- RED G- GREEN B- BLUE W- WHITE A- AMBER
* PTT	PILOT LIGHT, PUSH-TO-TEST TYPE, COLOR AS NOTED ABOVE.
TD	TIME DELAY RELAY RANGE AS NOTED SET POINT AS NOTED TDD-TIME DELAY AFTER DE-ENERGIZATION-OFF DELAY TDE-TIME DELAY AFTER ENERGIZATION-ON DELAY
	NOTC-NORMALLY OPEN, TIMED CLOSING WHEN ENERGIZED
	NCTO-NORMALLY CLOSED, TIMED OPENING WHEN ENERGIZED
	NOTO-NORMALLY OPEN, TIMED OPENING WHEN DE-ENERGIZED
	NCTC-NORMALLY CLOSED, TIMED CLOSING WHEN DE-ENERGIZED
⊗	FIELD INSTRUMENT, TAG NO. OR LOOP # AS INDICATED ✳INDICATES INSTRUMENT TYPE DEFINED ON LOOP SHEETS ## - INDICATES LOOP NO.
OR ⊗	LIQUID LEVEL (FLOAT) SWITCH NORMALLY OPEN, CLOSES ON RISING LEVEL NORMALLY CLOSED, OPENS ON RISING LEVEL NORMALLY OPEN, CLOSES ON DROPPING LEVEL NORMALLY CLOSED, OPENS ON DROPPING LEVEL
OR ⊗	PRESSURE OR VACUUM SWITCH NORMALLY OPEN, CLOSES ON RISING PRESSURE NORMALLY CLOSED, OPENS ON RISING PRESSURE NORMALLY OPEN, CLOSES ON DROPPING PRESSURE NORMALLY CLOSED, OPENS ON DROPPING PRESSURE
OR ⊗	TEMPERATURE SWITCH OR THERMOSTAT NORMALLY OPEN, CLOSES ON RISING TEMPERATURE NORMALLY CLOSED, OPENS ON RISING TEMPERATURE NORMALLY OPEN, CLOSES ON DROPPING TEMPERATURE NORMALLY CLOSED, OPENS ON DROPPING TEMPERATURE
OR ⊗	FLOW SWITCH (AIR, WATER, ETC.) NORMALLY OPEN, CLOSES ON INCREASED FLOW NORMALLY OPEN, CLOSES ON DROPPING FLOW NORMALLY CLOSED, OPENS ON INCREASED FLOW NORMALLY CLOSED, OPENS ON DROPPING FLOW
OR ⊗	POSITION (LIMIT) SWITCH NORMALLY OPEN NORMALLY OPEN - HELD CLOSED NORMALLY CLOSED NORMALLY CLOSED - HELD OPEN
OR ⊗	TORQUE SWITCH NORMALLY CLOSED, OPENS ON HIGH TORQUE
	CONDUCTORS OR CONDUITS CROSSING PATHS BUT NOT CONNECTED
	CONDUCTORS ELECTRICALLY CONNECTED
FAN	SUPPLY/EXHAUST FAN

SYMBOLS	DESCRIPTION
LA SC	LIGHTNING ARRESTER/SURGE CAPACITOR
OR	GROUND ROD GROUND ROD WELL
30A	FUSE, AMPERE RATING AS NOTED
OR HTR	HEATER
	INDUCTOR
TG	TACHOMETER GENERATOR
	CONTACT, NORMALLY OPEN (NO)
	CONTACT, NORMALLY CLOSED (NC)
	OVERLOAD RELAY HEATER
K	KEY INTERLOCK
TB	TERMINAL OR TEST BLOCK
RTD	RESISTANCE TEMPERATURE DETECTOR
VE	VIBRATION DETECTOR
DM	DAMPER MOTOR
ETM OR	ELAPSED TIME METER
MOV	MOTOR OPERATED VALVE
	PUSH BUTTON STATION, REFER TO ELECTRICAL SCHEMATIC FOR NUMBER OF DEVICES.
J	JUNCTION BOX
JP	POWER JUNCTION BOX
JI	4-20mA SIGNAL JUNCTION BOX
JC	CONTROL JUNCTION BOX
PB	PULL BOX
TC	TERMINATION CABINET
	REMOTE DEVICES
5	MOV WITHOUT INTEGRATED DISCONNECT
J 5	MOV WITH INTEGRATED DISCONNECT
	INDICATES LIMITS OF EQUIPMENT OR WIRING ENCLOSURE
MPR	(MPR) MOTOR PROTECTION RELAY

GENERAL NOTE

THIS IS A STANDARD LEGEND. SOME SYMBOLS MAY NOT APPEAR ON THE DRAWINGS.

NO.	DATE	REVISION	APP.

FOR INTERIM REVIEW
ONLY NOT INTENDED FOR
PERMIT, BIDDING OR
CONSTRUCTION PURPOSES.
ENGINEER:
HOSS FOROUZAN
P.E. SERIAL NO.77748
05/18/2026

GAI
Gupta & Associates, Inc.
CONSULTING ENGINEERING
Registration No. F-2593
302 Dennis St.,
Houston, Texas 77006
Tel: 713-636-2936
Fax: 713-636-2987
email: hforouzan@gaiconsulting.com

IDS Engineering Group
13430 NW. Freeway
Suite 700
Houston, Tx. 77040
713.462.3178
TxEng Firm 2726
TxSurv Firm 10110700

CITY OF HOUSTON
HOUSTON PUBLIC WORKS

LIFT STATION RENEWAL AND REPLACEMENT FY 2023

ELECTRICAL – LEGENDS AND SYMBOLS–I

WBS NUMBER	FOR CITY OF HOUSTON USE ONLY
R–000267–0179–4	
DRAWING SCALE	
HORIZ: NONE VERT: NONE	
CITY OF HOUSTON PM	
NAWARAJ PANTA, P.E.	
DWG. NO. G–08	SHEET NO. 343 OF 361

IDS JOB No. 0057-085-00

FILE PATH: O:\H8108_Lift Station Rehabilitation And Reconstruction (IDS)\6 Drawings\Electrical\Working\General\H8108_G–08.dwg

SYMBOLS	DESCRIPTION
A LA-3 b	REFER TO LIGHT FIXTURE SCHEDULE FOR TYPE FIXTURE: "A"- FIXTURE TYPE "b"- CONTROLLED BY SWITCH "b" "LA-3"- CIRCUIT 3 FROM PANEL LA
b A LA-3	REFER TO LIGHT FIXTURE SCHEDULE FOR TYPE FIXTURE, NOTATIONS SAME AS ABOVE
A LA-3 OR A LA-3 NS	INDICATES LIGHT FIXTURES WHICH ARE NONSWITCHED, NOTATIONS SAME AS ABOVE "NS" - NONSWITCHED
A LA-3 b	WALL MOUNTED LIGHTING FIXTURE, NOTATIONS SAME AS ABOVE
A LA-3 b	POLE MOUNTED LIGHTING FIXTURE, NOTATIONS SAME AS ABOVE
A LA-3	EMERGENCY LIGHTING BATTERY UNIT WITH TWO LAMP HEADS, NOTATIONS SAME AS ABOVE
A	REMOTE EMERGENCY ADJUSTABLE WALL LIGHTING FIXTURE WITH TWO LAMP HEADS, NOTATIONS SAME AS ABOVE
A LA-3	CEILING MOUNTED EXIT SIGN, NOTATIONS SAME AS ABOVE
A LA-3	WALL OUTLET EXIT SIGN. ARROW INDICATES DIRECTION OF EGRESS, NOTATIONS SAME AS ABOVE
	CONDUIT, EXPOSED/SURFACE MOUNTED
	CONDUIT OR DUCTBANK, CONCEALED
	CONDUIT, EXPOSED/SURFACE MOUNTED, TURNING UP
	CONDUIT, EXPOSED/SURFACE MOUNTED, TURNING DOWN
	CONDUIT STUBBED OUT AND CAPPED
2(3#3/0+1#2G, 3"C)	DENOTES A QUANTITY OF 2 SETS OF THREE (3) NO.3/0 AWG CONDUCTORS AND 1 NO.AWG GROUND CONDUCTOR EACH INSTALLED IN 3" CONDUIT.
2(2/C#16TS)	DENOTES A QUANTITY OF TWO INSTRUMENT CABLES. EACH CONSISTS OF TWO NO.16 AWG CONDUCTORS TWISTED TOGETHER AND COVERED WITH A METALLIC SHIELD AND AN OVERALL PROTECTIVE JACKET. REFER TO THE SPECIFICATIONS FOR THE EXACT CABLE TO BE PROVIDED.
3(4"C)	DENOTES A QUANTITY OF THREE 4-INCH CONDUITS.
	FLEXIBLE METAL CONDUIT "WHIP" (2#12, #12G, 3/4"C UNLESS OTHERWISE NOTED) FOR RECESSED LIGHTING FIXTURES AND LIQUID TIGHT MOTOR CONNECTIONS
LP#-1,3	HOMERUN, CIRCUITS 1 AND 3 RUN TO PANEL LP-1
$b	SINGLE POLE SWITCH "b"- INDICATES SWITCH LEG SHALL CONTROL LIGHT FIXTURES WITH "b" DESIGNATION
$b^x	MULTI POLE SWITCH "x"- INDICATES NUMBER OF POLE "b"- NOTATIONS SAME AS ABOVE
$b^P	SINGLE POLE SWITCH AND PILOT LIGHT, "b"- NOTATIONS SAME AS ABOVE
$b^D	DIMMER LIGHTING CONTROL SWITCH, "b"- NOTATIONS SAME AS ABOVE
$b^TM	TIME SWITCH, "b"-NOTATIONS SAME AS ABOVE
$^M	MANUAL MOTOR STARTER /DISCONNECT
$^OS	SINGLE POLE SWITCH WITH OCCUPANCY SENSOR
$^DM	SINGLE POLE DIMMER SWITCH
$x b xx	SWITCH ENCLOSURE "x"- NOTATIONS SAME AS ABOVE "b"- NOTATIONS SAME AS ABOVE "xx"- INDICATES ENCLOSURE TYPE
LC-1	LIGHTING CONTACTOR WITH NUMBER OF POLES AS INDICATED

SYMBOLS	DESCRIPTION
L*-## OR L*-##	LIGHTING PANELBOARD (TYPICAL 120V/240V OR 120V/208V)
H*-## OR H*-##	DISTRIBUTION PANELBOARD (TYPICAL 277V/480V)
LA-3	DUPLEX RECEPTACLE, 20A, 120V, 2P, 3W GFI- GROUND FAULT INTERRUPTER TYPE WP- WEATHERPROOF "LA-3"- CIRCUIT 3 FROM PANEL LA
	WELDING RECEPTACLE
	20A, 240V, 2P, 3W, RECEPTACLE
	CLASS 1, DIVISION 1, RATED TWIST LOCK RECEPTACLE, VOLTAGE AND AMPERAGE RATING AS NOTED
	SINGLE FACE, SINGLE GANG PEDESTAL WITH 20A, 120V, 2P, 3W DUPLEX RECEPTACLE, FURNISHED AND INSTALLED UNDER DIVISION 16 UNLESS OTHERWISE NOTED. * DENOTES FURNISHED UNDER OTHER DIVISIONS OF THE SPECIFICATIONS BUT INSTALLED UNDER DIVISION 16
D	DOUBLE FACE, SINGLE GANG PEDESTAL WITH 20A, 120V, 2P, 3W DUPLEX RECEPTACLE AND 20A, 240V, 2P, 3W SINGLE RECEPTACLE, FURNISHED AND INSTALLED UNDER DIVISION 16 UNLESS OTHERWISE NOTED. * DENOTES FURNISHED UNDER OTHER DIVISIONS OF THE SPECIFICATIONS BUT INSTALLED UNDER DIVISION 16
	DOUBLE RECEPTACLE, 20A, 120V, 2P, 3W MOUNTED IN BOX CURB FURNISHED UNDER OTHER DIVISIONS OF THE SPECIFICATIONS BUT INSTALLED UNDER DIVISION 16
	SINGLE GANG 20A, 120V, 3P, 3W RECEPTACLE
	QUAD RECEPTACLE
OS	OCCUPANCY SENSOR CAPABLE OF VACANCY
PC	PHOTOCELL
	QUICK CONNECT TERMINALS

TAGGING		
EQUIPMENT	EQUIPMENT TAG	CONDUIT TAG
MOTOR CONTROL CENTER	MCC-1	MC1-XX
SWITCHBOARD	SWBD-1	SB1-XX
SWITCHGEAR	SWGR-1	SG1-XX
PROGRAMMABLE LOGIC CABINET	PLC-1	PL1-XX
VARIABLE FREQUENCY DRIVE	VFD-1	VF1-P
LOW VOLTAGE TRANSFORMER	TX-LX OR TX-HX	TXLX-P OR TXHX-P
SERVICE TRANSFORMER	TX-1	TX1-P
GENERATOR	GEN-1	GN1-X
LIGHTING/POWER PANELBOARD	LP/PP-XX	XX-XX
AUTOMATIC TRANSFER SWITCH	ATS-1	AT1-XX
TYPICAL TAG FOR CONDUIT FROM THIS EQUIPMENT TO DOWN STREAM LOAD FOR EXAMPLE.		

SYMBOLS	DESCRIPTION
COMMUNICATIONS SYSTEMS	
	TELEPHONE OUTLET
	DATA OUTLET
P	DATA INPUT/OUTPUT CABLE OUTLET. "P" DENOTES PROCESS COMPUTER SYSTEM
	VOICE/DATA OUTLET
S	PAGING SPEAKER HORN
S	PAGING SPEAKER BI-DIRECTIONAL
S	PAGING SPEAKER, CEILING MOUNTED TYPE
S	PAGING SPEAKER, WALL MOUNTED TYPE
SECURITY SYSTEMS	
SAP	SECURITY ALARM PANEL
DS	SECURITY ALARM DOOR SWITCH
KP	SECURITY ALARM KEY PAD
CR	SECURITY SYSTEM CARD ACCESS READER
WS	SECURITY ALARM WINDOW SWITCH
MD	SECURITY ALARM MOTION DETECTOR
	SECURITY CAMERA CCTV- CLOSED CIRCUIT TV CAMERA PTZ- PAN, TILT, ZOOM CAMERA LENS CONTROLS
GB	GLASS BREAK DETECTOR
ACP	ACCESS CONTROL PANEL
FIRE ALARM SYSTEMS	
FACP	FIRE ALARM CONTROL PANEL
SD	SMOKE DETECTOR : D- DENOTES DUCT SMOKE DETECTOR R- DENOTES FIXED TEMPERATURE RATE-OF-RISE TYPE.
F	FIRE ALARM MANUAL PULL STATION, MOUNT AT 4'-0"
	ALARM HORN, MOUNT AT 7'-6" : F- DENOTES FIRE ALARM
	ALARM STROBE, MOUNT AT 6'-8" : F- DENOTES FIRE ALARM
	ALARM HORN AND STROBE LIGHT COMBINATION, MOUNT AT 6'-8" : F- DENOTES FIRE ALARM

EXAMPLE LEGEND:

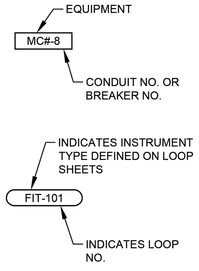

ABBREVIATIONS	
AC	ALTERNATING CURRENT
AFD	ADJUSTABLE FREQUENCY DRIVE
AFF	ABOVE FINISHED FLOOR
AG	ABOVE GRADE
ALUM	ALUMINUM
AMP/A	AMPERE
ATS	AUTOMATIC TRANSFER SWITCH
AUTO	AUTOMATIC
AUX	AUXILIARY
AWG	AMERICAN WIRE GAUGE
C	CONDUIT
CB	CIRCUIT BREAKER
CKT	CIRCUIT
CLF	CURRENT LIMITING FUSE
CP	CONTROL PANEL
CPT	CONTROL POWER TRANSFORMER
CR	CONTROL RELAY
CS	CONTROL SWITCH
CT	CURRENT TRANSFORMER
CU	COPPER
DC	DIRECT CURRENT
DI	DOOR INTERLOCK
DN	DOWN
DWG	DRAWING
EHH	ELECTRICAL HANDHOLE
EC	EMPTY CONDUIT
ELEC	ELECTRICAL
ELEV	ELEVATION
EM	EMERGENCY
EMH	ELECTRICAL MANHOLE
EO	ELECTRICALLY OPERATED
ERMS	ENERGY-REDUCING MAINTENANCE SWITCH
FBO	FURNISHED BY OTHERS
FO	FIBER OPTIC
FRP	FIBERGLASS REINFORCED POLYESTER
FU	FUSE
GCP	GENERATOR CONTROL PANEL
GEN	GENERATOR
G, GRD	GROUND
GFI	GROUND FAULT INTERRUPTER
GFCI	GROUND FAULT CIRCUIT INTERRUPTER
GO	GATE OPERATOR
GRS	GALVANIZED RIGID STEEL
HH	HANDHOLE
HT	HEIGHT
HTP	HEAT TRACE PANEL
HZ	HERTZ
IMH	INSTRUMENT MAN HOLE
INST	INSTRUMENT
LA	LIGHTNING ARRESTER
LC	LIGHTNING CONTACTOR
LCP	LOCAL CONTROL PANEL
LGTS	LIGHTS
LP	LIGHTING PANEL
	CONTINUED ABOVE RIGHT

	CONTINUED BELOW LEFT
LSIG	LONG TIME/SHORT TIME/ INSTANTANEOUS/GROUND FAULT FEATURE INCLUDED
MCC	MOTOR CONTROL CENTER
MCP	MOTOR CIRCUIT PROTECTOR
MFR	MANUFACTURER
MH	MANHOLE
MLO	MAIN LUGS ONLY
MTG	MOUNTING
MTD	MOUNTED
MTS	MANUAL TRANSFER SWITCH
NC	NORMALLY CLOSED
NO	NORMALLY OPEN OR NUMBER
NTS	NOT TO SCALE
OL	OVERLOAD
OLX	OVERLOAD CONTROL RELAY
PB	PUSH BUTTON OR PULL BOX
PCC	PUMP CONTROL CONSOLE
PPR	PHASE PROTECTIVE RELAY
PFR	PHASE FAILURE RELAY
PH	PHASE
PNLBD	PANELBOARD
PR	PAIR
PT	POTENTIAL TRANSFORMER
PTT	PUSH TO TEST TYPE
PVC	POLYVINYL CHLORIDE
QTY	QUANTITY
RCP	RELAY CONTROL PANEL
RECP	RECEPTACLES
RVSS	REDUCED VOLTAGE SOFT STARTER
SC	SURGE CAPACITOR
SCH	SCHEMATIC
SCCR	SHORT CIRCUIT CURRENT RATING
SEC	SECONDS OR SECONDARY
SH	SHIELDED OR SHEET
SHT	SHEET
SM	MOTOR RATED SWITCH
SN	SOLID NEUTRAL
SS	STAINLESS STEEL
ST	STARTER
SV	SOLENOID VALVE
SW	SWITCH
SWBD	SWITCHBOARD
SWGR	SWITCHGEAR
TC	TERMINATION CABINET
TEL	TELEPHONE
TO	TIME DELAY ON OPENING
TS	TEMPERATURE SWITCH
TVSS	TRANSIENT VOLTAGE SURGE SUPPRESSOR
TSW	TWISTED SHIELDED WIRE
TYP	TYPICAL
UG	UNDERGROUND
V	VOLTS
VFD	VARIABLE FREQUENCY DRIVE
VO	VALVE OPERATOR
W	WIRE
WP	WEATHERPROOF
XP	EXPLOSION PROOF
XFMR	TRANSFORMER

GENERAL NOTE

THIS IS A STANDARD LEGEND. SOME SYMBOLS MAY NOT APPEAR ON THE DRAWINGS.

NO.	DATE	REVISION	APP.

FOR INTERIM REVIEW
ONLY NOT INTENDED FOR
PERMIT, BIDDING OR
CONSTRUCTION PURPOSES.
ENGINEER:
HOSS FOROUZAN
P.E. SERIAL NO.77748
05/18/2026

GAI
Gupta & Associates, Inc.
CONSULTING ENGINEERING
Registration No. F-2593
302 Dennis St.,
Houston, Texas 77006
Tel: 713-636-2936
Fax: 713-636-2987
email: hforouzan@gaiconsulting.com

IDS Engineering Group
13430 NW. Freeway
Suite 700
Houston, Tx. 77040
713.462.3178
TxEng Firm 2726
TxSurv Firm 10110700

CITY OF HOUSTON
HOUSTON PUBLIC WORKS

LIFT STATION RENEWAL
AND REPLACEMENT FY 2023

ELECTRICAL – LEGENDS AND SYMBOLS–II

WBS NUMBER	FOR CITY OF HOUSTON USE ONLY
R–000267–0179–4	
DRAWING SCALE	
HORIZ: NONE VERT: NONE	
CITY OF HOUSTON PM	
NAWARAJ PANTA, P.E.	
SHEET NO. 344 OF 361	

DWG. NO. G–09

IDS JOB No. 0057-085-00

PLOTTED: 5/12/2026 8:19 PM

FILE PATH: O:\H8108_Lift Station Rehabilitation And Reconstruction (IDS)\6 Drawings\Electrical\Working\General\H8108_G–09.dwg

PLOTTED: 5/12/2026 8:19 PM

LUMINAIRE SCHEDULE

FIXTURE TYPE	VOLTAGE	LAMP TYPE	TOTAL INPUT WATTS	TOTAL OUTPUT LUMENS	MOUNT	DESCRIPTION	MAKE/MODEL
A	120/277V UNIVERSAL DRIVER	LED	42	4000	SUSPENDED	LINEAR LED LUMINAIRE, UV-STABILIZED, INJECTION-MOLDED, IMPACT-RESISTANT, FROSTED POLYCARBONATE HOUSING, -29°C TO 40°C OPERATING TEMPERATURE, 4000K COLOR TEMPERATURE, 80CRI, UV-STABILIZED, INJECTION-MOLDED, IMPACT-RESISTANT CLEAR POLYCARBONATE LENS, UL 1598 WET LOCATION LISTED.	LITHONIA ARCHWAY VAP LED SERIES VAP-4000L-PCL-WD-MVOLT-40K-80CRI-VAPCMB DAY-BRITE CFI VAPORLUME LED V2 V2WPB70L840-4-UNV TBK OR WBK ACESSORY & FKR-126
B	120/277V UNIVERSAL DRIVER	LED	13	---	STEM MOUNT	RED POLYCARBONATE LENS SUITABLE FOR WET LOCATIONS - 120V, SERIES 105 XBR	---
C	120/277V UNIVERSAL DRIVER WITH EMERGENCY BATTERY PACK WITH PHOTO CELL	LED	12	1500	WALL	POWDER COATED DIE-CAST ALUMINUM HOUSING, NATURAL ALUMINUM FINISH, -30°C TO 40°C OPERATING TEMPERATURE, 4000K COLOR TEMPERATURE, 70CRI, GASKETED LENS, IESNA TYPE III DISTRIBUTION, NEMA 4X RATED, WET LOCATION RATED, WITH EMERGENCY BATTERY PACK.	LITHONIA LIGHTING WST LED SERIES WST LED P1 40K VF MVOLT E20WC GARDCO LED WALL SCONCE 101L SERIES 101L-16L-530-NW-G1-3-EBPC-UNV-MGY
D	120/277V UNIVERSAL DRIVER WITH EMERGENCY BATTERY PACK	LED	70	-	POLE MOUNT	HIGH EFFICIENCY LED UNIT; UL LISTED FOR WET LOCATION	LIHONIA LIGHTING D-SERIES SIZE 1 DSX1 LED P2 50K T3S MVOLT RPA DDBXD OR EQUAL
E	120/277V UNIVERSAL DRIVER WITH EMERGENCY BATTERY PACK	LED	1.2	536	WALL 8-FT ABOVE FLOOR	LED STANDBY EMERGENCY LUMINAIRE, WHITE ENGINEERING GRADE THERMOPLASTIC HOUSING, 16°C TO 32°C OPERATING TEMPERATURE, IMPACT RESISTANT, CORROSION-PROOF, DAMP LOCATION RATED, EMERGENCY BATTERY PACK INCLUDED.	LITHONIA ELM6 LED SERIES LV-S-W1R-120/277-EL-N-UM-DL
F	MVOLT (120/277 UNIVERSAL DRIVER)	LED	30	-	STANCHION MOUNT	BODY MOUNTING MODULES AND GUARD-COPPER-FREE AL WITH CORRO-FREE EPOXY POWDER COAT. SUITABLE FOR CLASS I, DIVISION I HAZARDOUS LOCATIONS.	CROUSE-HINDS EV LED J4C701
X	120/277V UNIVERSAL DRIVER WITH EMERGENCY BATTERY PACK	LED	18.2	N/A	UNIVERSAL	EMERGENCY EXIT SIGN, CAST-ALUMINUM, NEMA-4X, CLEAR UV-STABLE POLYCARBONATE COVER, SINGLE WHITE POLYCARBONATE, FACEPLATE WITH DIRECTIONAL CHEVRON KNOCKOUTS. WHITE HOUSING, UNIVERSAL MOUNT, SEALED MAINTENANCE-FREE NICKEL CADMIUM BATTERY WITH 90 MINUTE CAPACITY.	LITHONIA LIGHTING LV EL N LED SERIES LV-S-W-2-R-120/277-EL N-UM-4X
TPA	N/A	N/A	N/A	N/A	BASE MOUNTED POLE	ROUND STRAIGHT ALUMINUM POLE, 4" DIAMETER WITH 2-3/8" TENON, 8' POLE WITH LOW PROFILE BASE COVER, HANDHOLE WITH RECESSED COVER. RATED FOR 150 MPH. MATCH TENON TO LUMINAIRE TYPE.	LITHONIA LIGHTING FLORIDA RATED POLE RSALP 8 4C T20 VD DNA
TPB	N/A	N/A	N/A	N/A	BASE MOUNTED POLE	ROUND STRAIGHT ALUMINUM POLE, 5" DIAMETER WITH 2-3/8" TENON, 16' POLE WITH LOW PROFILE BASE COVER, HANDHOLE WITH RECESSED COVER. RATED FOR 150 MPH. MATCH TENON TO LUMINAIRE TYPE.	LITHONIA LIGHTING FLORIDA RATED POLE RSALP 16 5C T20 VD DNA

NO.	DATE	REVISION	APP.

FOR INTERIM REVIEW ONLY NOT INTENDED FOR PERMIT, BIDDING OR CONSTRUCTION PURPOSES.
ENGINEER:
HOSS FOROUZAN
P.E. SERIAL NO.77748
05/18/2026

GAI
Gupta & Associates, Inc.
CONSULTING ENGINEERING
Registration No. F-2593
302 Dennis St.,
Houston, Texas 77006
Tel: 713-636-2936
Fax: 713-636-2987
email: hforouzan@gaiconsulting.com

IDS Engineering Group
13430 NW. Freeway
Suite 700
Houston, Tx. 77040
713.462.3178
TxEng Firm 2726
TxSurv Firm 10110700

CITY OF HOUSTON
HOUSTON PUBLIC WORKS

LIFT STATION RENEWAL AND REPLACEMENT FY 2023

GENERAL ELECTRICAL – LIGHTING FIXTURE SCHEDULE

WBS NUMBER	FOR CITY OF HOUSTON USE ONLY
R-000267-0179-4	
DRAWING SCALE	
HORIZ: NONE VERT: NONE	
CITY OF HOUSTON PM	
NAWARAJ PANTA, P.E.	
SHEET NO. 345 OF 361	

DWG. NO. G-10

IDS JOB No. 0057-085-00

FILE PATH: O:\H8108_Lift Station Rehabilitation And Reconstruction (IDS)\6 Drawings\Electrical\Working\General\H8108_G-10.dwg

PLOTTED: 5/12/2026 8:19 PM

PRIMARY FLOW ELEMENTS

	MAGNETIC FLOW METER
	ULTRASONIC DOPPLER FLOW METER
	ULTRASONIC TIME TRANSIT FLOW METER
	VORTEX FLOW METER
	VENTURI TUBE
	TURBINE OR PROPELLER TYPE METER
	ROTAMETER
	PITOT TUBE
	WEIR FLOW METER
	PARSHALL FLUME OR TRAPEZOIDAL FLUME
	ORIFICE PLATE
	THERMAL MASS FLOWMETER

PRIMARY LEVEL ELEMENTS

	ULTRASONIC LEVEL TRANSDUCER
	RADAR LEVEL TRANSDUCER
	PRIMARY ELEMENT PRESSURE PROBE LEVEL TRANSMITTER
	BUBBLER LEVEL TUBE ELEMENT
	CONDUCTIVE LEVEL PROBE
	FLOAT SWITCH

VALVES

	VALVE - OTHER IN-LINE TYPE NOT OTHERWISE IDENTIFIED
	THREE-WAY VALVE
	BALL VALVE
	GLOBE VALVE
	PINCH VALVE
	GATE VALVE
	NEEDLE VALVE
	DIAPHRAGM VALVE
	BUTTERFLY VALVE
	CHECK VALVE WITH FLOW DIRECTION
	PLUG VALVE
	PRESSURE-REDUCING REGULATOR INTERNAL PRESSURE TAP
	BACK PRESSURE REGULATOR INTERNAL PRESSURE TAP
	PRESSURE-REDUCING REGULATOR EXTERNAL PRESSURE TAP
	BACK PRESSURE REGULATOR EXTERNAL PRESSURE TAP

VALVES

S	SOLENOID ACTUATED VALVE
	"X" / AIR CYLINDER (P) / OIL CYLINDER (O) / HYDRAULIC CYLINDER (H) / ELECTRIC MOTOR (E) / SOLENOID VALVE (S)
OR NO SYMBOL	MANUAL VALVE

MISC PROCESS SYMBOLS

	ANNULAR TYPE SEAL
	CHEMICAL INJECTION POINT
	STRAINER
	DRAIN
	NORMAL OPERATING LEVEL
	UV CHAMBER
	FLOW STRAIGHTENER
	LOAD CELL
	SPRAY NOZZLE
	BLIND FLANGE
	FLANGE
	DIAPHRAGM SEAL
	PRESSURE RELIEF (OUT)
	VACUUM RELIEF (IN)

GATES

	SLUICE/SLIDE GATE
	FLOW CONTROL GATE

MOTORS

M	VARIABLE SPEED MOTOR
M	CONSTANT SPEED MOTOR

PUMPS, BLOWERS AND MISC EQUIPMENT

	CENTRIFUGAL BLOWER
	CENTRIFUGAL PUMP
	DIAPHRAGM PUMP AND MOTOR
	PROGRESSIVE CAVITY PUMP
	SUBMERSIBLE PUMP
	POSITIVE DISPLACEMENT BLOWER

PUMPS, BLOWERS AND MISC EQUIPMENT

	MIXER/FLOCCULATOR/AERATOR
	VERTICAL PUMP-1 USED WHEN DISCHARGE LINE IS IN WETWELL
	VERTICAL PUMP-2 USED WHEN DISCHARGE LINE IS EXPOSED.
	VERTICAL PUMP SHAFT USED WHEN INTAKE OF PUMP IS ENCASED.
	SUBMERSIBLE MIXER
	COMPRESSOR
	HEAT EXCHANGER
	FEED PUMP
	GRINDER/MACERATOR
	METERING PUMP
	PLUNGER PUMP
	PERISTALTIC METERING PUMP
	CENTRIFUGE
	PULSATION DAMPENER
	TURBO BLOWER

PUMPS, BLOWERS AND MISC EQUIPMENT

	ROTARY SCREEN

CONTROL ENCLOSURE, INSTRUMENTS AND SCADA

XXX / P AAA YY / BBB CCC D / ZZZ	DIGITAL/ANALOG INSTRUMENT AAA — ISA TAG (REFER TO TABLE) BBB — LOOP NUMBER CCC — LOOP NUMBER SUB D — DIVISION NUMBER P — POWER REQUIREMENT XXX — DESCRIPTION (USED ON PANEL INSTRUMENTS) YY — CHEMICAL ZZZ — LOCATION DIGITAL/ANALOG INSTRUMENT -LOCATED IN THE FIELD -NOT INSIDE OF PANEL -VISIBLE AT FIELD LOCATION -NORMALLY OPERATOR ACCESSIBLE
XXX / P AAA YY / BBB CCC D / ZZZ	DIGITAL/ANALOG INSTRUMENT -LOCATED ON PANEL -VISIBLE TO OPERATOR -NORMALLY OPERATOR ACCESSIBLE
XXX / P AAA YY / BBB CCC D / ZZZ	DIGITAL/ANALOG INSTRUMENT -LOCATED INSIDE PANEL -NOT VISIBLE TO OPERATOR -NORMALLY NOT ACCESSIBLE
XXX / AAA / BBB CCC	DISPLAY (INDICATION/CONTROLLER) AAA — ISA TAG (REFER TO TABLE) BBB — LOOP NUMBER CCC — LOOP NUMBER SUB XXX — DESCRIPTION DISPLAY (INDICATION/CONTROLLER) -LOCATED IN THE FIELD -NOT INSIDE OF PANEL -VISIBLE AT FIELD LOCATION -NORMALLY OPERATOR ACCESSIBLE
XXX / AAA / BBB CCC	DISPLAY (INDICATION/CONTROLLER) -LOCATED ON PANEL -VISIBLE TO OPERATOR -NORMALLY OPERATOR ACCESSIBLE
XXX / AAA / BBB CCC	DISPLAY (INDICATION/CONTROLLER) -LOCATED INSIDE PANEL -NOT VISIBLE TO OPERATOR -NORMALLY NOT ACCESSIBLE
-	INTERLOCKING RELAY

CONTROL ENCLOSURE AND SCADA

	DIGITAL INPUT
	DIGITAL OUTPUT
	ANALOG INPUT
	ANALOG OUTPUT
	SURGE SUPPRESSOR
	OPTO ISOLATOR
/	SIGNAL CONVERTER/ ISOLATOR */* - (INPUT/OUTPUT) * DEFINED AS FOLLOWS: E - VOLTAGE I - CURRENT P - PNEUMATIC PD - PULSE DURATION H - HYDRAULIC O - ELECTROMAGNETIC, SONIC R - RESISTANCE (ELECTRIC)

CONTROL ENCLOSURE, INSTRUMENTS AND SCADA

F(X)

PLC/RTU LOGIC

FUNCTION SYMBOLS AND ABBREVIATIONS

K	PROPORTIONAL GAIN OR ATTENUATE (INPUT:OUTPUT)
- K	REVERSE PROPORTIONAL GAIN OR ATTENUATE (INPUT:OUTPUT)
Σ	SUMMING
Σ/n	AVERAGING
Δ	SUBTRACTING
√	EXTRACT SQUARE ROOT
÷	DIVIDE
X	MULTIPLY
S	INTEGRATE
+	BIAS POSITIVE
-	BIAS NEGATIVE
F(x)	NONLINEAR OR UNSPECIFIED FUNCTION
>	HIGH SELECT
<	LOW SELECT
⊦	HIGH LIMIT
⊣	LOW LIMIT

INSTRUMENT (COMMON HOUSING)	INSTRUMENT (SEPERATOR HOUSING)	INSTRUMENT (PART OF MAJOR EQUIPMENT)

GENERAL NOTES:

1. THIS IS A GENERAL LEGEND SHEET, SOME SYMBOLS AND ABBREVIATIONS MAY NOT APPLY TO THIS SPECIFIC PROJECT.
2. THIS LEGEND APPLIES TO INSTRUMENTATION DIAGRAMS ONLY AND MAY DIFFER FROM LEGENDS FOR OTHER SHEETS.
3. IN GENERAL THIS LEGEND SHEET AND THE INSTRUMENTATION DIAGRAMS ARE BASED ON INTERNATIONAL SOCIETY OF AUTOMATION, STANDARDS FOR PRACTICES FOR INSTRUMENTATION, STANDARD S5.1 SOME MODIFICATIONS, ADDITIONS AND ALTERATIONS HAVE BEEN MADE AS REQUIRED TO ACCOMMODATE THE PROJECT REQUIREMENTS.
4. SOME PROCESS ITEMS, SUCH AS EQUIPMENT ISOLATION VALVES, BYPASS LINES, ETC., WHICH ARE NOT CRITICAL FOR AN UNDERSTANDING OF THE INSTRUMENTATION AND CONTROL FUNCTIONS ARE NOT SHOWN ON THE INSTRUMENTATION SHEETS.
5. SEE ELECTRICAL SHEETS AND SPECIFICATIONS FOR ADDITIONAL CONTROL AND INTERLOCK REQUIREMENTS FOR EQUIPMENT NOT SHOWN OR NOT PROVIDED BY THE INSTRUMENTATION SUPPLIER.
6. IN THE EVENT OF DISCREPANCY BETWEEN THE PROCESS & INSTRUMENTATION DIAGRAMS AND THE LOOP DIAGRAMS, THE INFORMATION FROM THE LOOP DIAGRAMS SHALL BE USED.

HAND SWITCH ABBREVIATIONS:

HOA	HAND/OFF/AUTO
HOR	HAND/OFF/REMOTE
LOC	LOCAL/OFF/COMPUTER
LOR	LOCAL/OFF/REMOTE
LOS	LOCKOUT STOP
OSC	OPEN/STOP/CLOSE
RSL	RAISE/STOP/LOWER
L/C	LOCAL/COMPUTER
L/R	LOCAL/REMOTE
O/C	OPEN/CLOSE
S/S	START/STOP
A/M	AUTO/MANUAL
H/C	HAND/COMPUTER
PB	PUSHBUTTON

GENERAL NOTE

THIS IS A STANDARD LEGEND. SOME SYMBOLS MAY NOT APPEAR ON THE DRAWINGS.

NO.	DATE	REVISION	APP.

FOR INTERIM REVIEW ONLY NOT INTENDED FOR PERMIT, BIDDING OR CONSTRUCTION PURPOSES.
ENGINEER:
HOSS FOROUZAN
P.E. SERIAL NO.77748
05/18/2026

GAI
Gupta & Associates, Inc.
CONSULTING ENGINEERING
Registration No. F-2593
302 Dennis St.,
Houston, Texas 77006
Tel: 713-636-2936
Fax: 713-636-2987
email: hforouzan@gaiconsulting.com

IDS Engineering Group
13430 NW. Freeway
Suite 700
Houston, Tx. 77040
713.462.3178
TxEng Firm 2726
TxSurv Firm 10110700

CITY OF HOUSTON
HOUSTON PUBLIC WORKS

LIFT STATION RENEWAL AND REPLACEMENT FY 2023

INSTRUMENTATION – LEGENDS AND SYMBOLS–I

WBS NUMBER	FOR CITY OF HOUSTON USE ONLY
R–000267–0179–4	
DRAWING SCALE	
HORIZ: NONE VERT: NONE	
CITY OF HOUSTON PM	
NAWARAJ PANTA, P.E.	
DWG. NO. G–11	SHEET NO. 346 OF 361

IDS JOB No. 0057-085-00

FILE PATH: O:\H8108_Lift Station Rehabilitation And Reconstruction (IDS)\6 Drawings\Electrical\Working\General\H8108_G–11.dwg

PLOTTED: 5/12/2026 8:19 PM

LINE SYMBOLS

	MAJOR PROCESS LINE
	MINOR PROCESS LINE
	FUTURE PROCESS LINE
	EXISTING PROCESS LINE
	HARDWIRED SIGNAL
	SOFT LINK
L L	HYDRAULIC LINK
// //	PNEUMATIC LINK
x x	CAPILLARY TUBE OR FILLED SYSTEM SIGNAL
	ELECTROMAGNET OR SONIC SIGNAL (GUIDED)
DESCRIPTION X SHEET# Y	(USED WHEN REFERRING TO A SHEET IN THE DESIGN SET) DESCRIPTION - WHERE FLOW IS GOING SHEET# - WHAT SHEET PROCESS CONTINUES ON X - USED WHEN TWO OR MORE ARROWS ARE REFERING TO THE SAME SHEET. Y - USED WHEN TWO OR MORE ARROWS ARE REFERRING TO THE SAME SHEET.
DESCRIPTION	(USED WHEN REFERRING TO A SHEET NOT IN THE DESIGN SET) DESCRIPTION - WHERE FLOW IS GOING
CAT5e CAT5e	CAT-5e ETHERNET CABLE
CAT6 CAT6	CAT-6 ETHERNET CABLE
- -	MODBUS PLUS CABLE
_ _	RS-485 CABLE
RS-232 RS-232	RS-232 CABLE
POE POE	POWER OVER ETHERNET CABLE
T1 T1	T1 FIBER CONNECTION
FO FO	NON-SPECIFIC FIBER OPTIC CABLE
100 100	FIBER 100BASE-FX
1000 1000	FIBER 1000BASE-FX
	SIGNAL CROSSING
	PROCESS LINE CROSSING
	PROCESS LINE/ HARDWIRE SIGNAL CROSSING

EQUIPMENT/LOOP TAGGING

X	EQUIPMENT TAG USED TO IDENTIFY NON-INSTRUMENT EQUIPMENT
X	LOOP TAG USED TO TIE THE PROCESS FLOW DIAGRAM TO A LOOP DIAGRAM

STANDARD VALVE AND PIPING USAGE

PDIT 1	BLOCK/BLEED VALVE ARRANGEMENT
PI 1	INSTRUMENTS WITH VALVE ONLY
PI 1	INSTRUMENTS WITH DIAPHRAGM SEAL
PI 1	INSTRUMENTS WITH ANNULAR SEAL

PANEL DETAIL SYMBOLS

RUN	INDICATING LIGHT -R RED (ACTIVE EQUIPMENT) -G GREEN (EQUIPMENT OFF) -W WHITE (POWER) -B BLUE (CONDITION IE BACKWASH IN PROGRESS) -A AMBER (ALARM CONDITION)
H/O/A	SWITCH -L/R (LOCAL - REMOTE) -L/O/A (LOCAL - OFF - AUTO) -L/O/R (LOCAL - OFF - REMOTE) -H/O/A (HAND - OFF - AUTO) -H/O/R (HAND - OFF - REMOTE)
START	PUSHBUTTON
START	PUSHBUTTON
	HORN
	BEACON
OIT	OPERATOR INTERFACE TERMINAL

SECURITY SYSTEM SYMBOLS

CCTV	CLOSED CIRCUIT TELEVISION CAMERA
PTZ	PAN, TILT, ZOOM CAMERA

GENERAL ABBREVIATIONS

AI	ANALOG INPUT
AL	ALARM PILOT LIGHT
AO	ANALOG OUTPUT
AS	AIR SUPPLY
ASP	APPLICATION SERVICE PROVIDER
BFV	BUTTERFLY VALVE
CCTV	CLOSED CIRCUIT TELEVISION
CH4	METHANE
CL2	CHLORINE
COND	CONDUCTIVITY
COMP	COMPUTER
CP	CONTROL PANEL
CPU	CENTRAL PROCESSING UNIT
CRC	CONTROL ROOM CONSOLE
CTU	CENTRAL TELEMETRY UNIT
DCU	DISTRIBUTED CONTROL UNIT
DI	DIGITAL OR DISCRETE INPUT
DO	DISSOLVED OXYGEN OR DIGITAL OUTPUT
DPU	DISTRIBUTED PROCESSING UNIT
EPP	ETHERNET PATCH PANEL
ES	EMERGENCY STOP
ESW	ETHERNET SWITCH
ETM	ELAPSED TIME METER
FC	FAIL CLOSED
FCP	FIELD CONTROL PANEL
FCS	FILTER CONTROL STATION
FCV	FLOW CONTROL VALVE
FLP	FAIL LAST POSITION
FO	FAIL OPEN
FOPP	FIBER OPTIC PATCH PANEL
FPR	FEEDER PROTECTION RELAY
H2S	HYDROGEN SULFIDE
HMI	HUMAN MACHINE INTERFACE
JB	JUNCTION BOX
IO	INPUT/OUTPUT
IR	INFARED
LAS	LIQUID AMMONIA SULFATE
LCP	LOCAL CONTROL PANEL
LCS	LOCAL CONTROL STATION
LT	LEVEL TRANSMITTER
LPU	LOCAL PROCESSING UNIT
LTS	LOCAL TERMINAL SYSTEM
MC	MOTOR CONTROLLER
NAOCL	SODIUM HYPOCHLORIDE
NC	NORMALLY CLOSED
NH3	AMMONIA
NIM	NETWORK INTERFACE MODULE
NO	NORMALLY OPEN
MCC	MOTOR CONTROL CENTER
MM	MULTI MODE FIBER OPTIC CABLE
MPR	MOTOR PROTECTION RELAY
OIT	OPERATIONS INTERFACE TERMINAL
OL	OVERLOAD
OWS	OPERATOR WORKSTATION
PB	PUSH BUTTON
PCSI	PROCESS CONTROL SYSTEM INTEGRATOR
pH	HYDROGEN ION
PLC	PROGRAMMABLE LOGIC CONTROLLER
PMCS	PROCESS MONITORING CONTROL SYSTEM
POLY	POLYMER
PQM	POWER QUALITY METER
PS	POWER SUPPLY
PSU	POWER SUPPLY UNIT
PV	PINCH VALVE
RBC	REMOTE BASE CONTROLLER
RIO	REMOTE INPUT OUTPUT
RTU	REMOTE TERMINAL UNIT
SCADA	SUPERVISORY CONTROL AND DATA AQUISITION
SM	SINGLE MODE FIBER OPTIC CABLE
SO2	SULFUR DIOXIDE
SOL	SOLENOID
SPD	SURGE PROTECTION DEVICE
UPS	UNINTERRUPTIBLE POWER SUPPLY
TC	TERMINATION CABINET
TURB	TURBIDITY
VIB	VIBRATION
VFD	VARIABLE FREQUENCY DRIVE
VLV	VALVE

MEANINGS OF IDENTIFICATION LETTERS

THIS TABLE APPLIES ONLY TO THE FUNCTIONAL IDENTIFICATION OF INSTRUMENTS.

	FIRST LETTER		SUCCEEDING LETTERS		
	MEASURED OR INITIATING VARIABLE	MODIFIER	READOUT OR PASSIVE FUNCTION	OUTPUT FUNCTION	MODIFIER
A	ANALYSIS/ANALYTICAL		ALARM		
B	BURNER, COMBUSTION			CLOSE, STOP, DECREASE (1)	
C	CONDUCTIVITY			CONTROL	
D	DENSITY (MASS) OR SPECIFIC GRAVITY	DIFFERENTIAL		OPEN START, INCREASE (1)	
E	VOLTAGE (EMF)		SENSOR (PRIMARY ELEMENT)		
F	FLOW RATE	RATIO (FRACTION)			FAIL (1)
G	GAUGING (DIMENSIONAL)		GLASS VIEWING DEVICE		
H	HAND				HIGH OR OPEN
I	CURRENT (ELECTRICAL)		INDICATE		
J	POWER	SCAN			
K	TIME OR TIME SCHEDULE	TIME RATE OR CHANGE		CONTROL STATION	
L	LEVEL		LIGHT (PILOT)		LOW OR CLOSED
M	MOISTURE, HUMIDITY, MOTOR, MOTION	MOMENTARY		MOTOR (1)	MIDDLE OR INTERMEDIATE
N	USERS CHOICE		USER'S CHOICE		ON OR OPERATE (1)
O	USER'S CHOICE		ORIFICE (RESTRICTION)		OVERLOAD (1)
P	PRESSURE OR VACUUM		POINT (TEST CONNECTION)	PUMP (1)	
Q	QUANTITY (2)	INTEGRATE OR TOTALIZE			
R	RADIATION		RECORD		
S	SPEED OR FREQUENCY	SAFETY		SWITCH	
T	TEMPERATURE			TRANSMIT	
U	MULTIVARIABLE (2)		MULTIFUNCTION (2)	MULTIFUNCTION (2)	MULTIFUNCTION (2)
V	VIBRATION, MECHANICAL ANALYSIS			VALVE, DAMPER OR LOUVER	
W	WEIGHT OR FORCE		WELL		UNCLASSIFIED (2)
X	UNCLASSIFIED (2)	X AXIS	UNCLASSIFIED (2)	UNCLASSIFIED (2)	UNCLASSIFIED (2)
Y	EVENT, STATE, PRESENCE	Y AXIS		RELAY, COMPUTE, CONVERT	
Z	POSITION, DIMENSION	Z AXIS		DRIVE, ACTUATE OR UNCLASSIFIED FINAL CONTROL ELEMENT	

COMMON HMI/INSTRUMENT ISA TAGGING

ABBREVIATION	MEANING
AIT	ANALYTICAL INDICATING TRANSMITTER
AE	ANALYTICAL ELEMENT
AI	CHEMICAL RESIDUAL/INDICATION
CT	CYCLE TIMER
FIT	FLOW INDICATING TRANSMITTER
FE	FLOW ELEMENT
FI	FLOW INDICATION
FS	FLOAT SWITCH
HS	HAND SWITCH
JAL	POWER ALARM LOW
II	CURRENT INDICATION
LIT	LEVEL INDICATING TRANSMITTER
LE	LEVEL ELEMENT
LI	LEVEL INDICATION
LSH	LEVEL SWITCH HIGH
LSL	LEVEL SWITCH LOW
LAL	LEVEL ALARM LOW
LAH	LEVEL ALARM HIGH
PIT	PRESSURE INDICATING TRANSMITTER
PE	PRESSURE ELEMENT
PI	PRESSURE INDICATION
PPU	PERPETUAL POWER UNIT
PSH	PRESSURE SWITCH HIGH
PSL	PRESSURE SWITCH LOW
SI	SPEED INDICATION
SIC	SPEED INDICATING CONTROLLER
TIT	TEMPERATURE INDICATING TRANSMITTER
TE	TEMPERATURE ELEMENT
TI	TEMPERATURE INDICATION
TSH	TEMPERATURE SWITCH HIGH
WIT	WEIGHT INDICATING TRANSMITTER
WE	WEIGHT ELEMENT
WI	WEIGHT INDICATION
XA	FAULT ANNUNCIATION
YL	MISC. EVENT LIGHT (IN REMOTE)

COMMON HMI/INSTRUMENT ISA TAGGING

ABBREVIATION	MEANING
ZCH	OPEN GATE/VALVE
ZCL	CLOSE GATE/VALVE
ZSH	POSITION SWITCH HIGH
ZSL	POSITION SWITCH LOW
ZLH	VALVE/GATE OPEN
ZLL	VALVE/GATE CLOSED
ZIT	POSITION INDICATING TRANSMITTER

GENERAL NOTE

THIS IS A STANDARD LEGEND. SOME SYMBOLS MAY NOT APPEAR ON THE DRAWINGS.

NO.	DATE	REVISION	APP.

FOR INTERIM REVIEW
ONLY NOT INTENDED FOR
PERMIT, BIDDING OR
CONSTRUCTION PURPOSES.
ENGINEER:
HOSS FOROUZAN
P.E. SERIAL NO.77748
05/18/2026

GAI
Gupta & Associates, Inc.
CONSULTING ENGINEERING
Registration No. F-2593
302 Dennis St.,
Houston, Texas 77006
Tel: 713-636-2936
Fax: 713-636-2987
email: hforouzan@gaiconsulting.com

IDS Engineering Group
13430 NW. Freeway
Suite 700
Houston, Tx. 77040
713.462.3178
TxEng Firm 2726
TxSurv Firm 10110700

CITY OF HOUSTON
HOUSTON PUBLIC WORKS

LIFT STATION RENEWAL
AND REPLACEMENT FY 2023

INSTRUMENTATION – LEGENDS AND SYMBOLS–II

WBS NUMBER	FOR CITY OF HOUSTON USE ONLY
R–000267–0179–4	
DRAWING SCALE	
HORIZ: NONE VERT: NONE	
CITY OF HOUSTON PM	
NAWARAJ PANTA, P.E.	
DWG. NO. G–12	SHEET NO. 347 OF 361

IDS JOB No. 0057-085-00

FILE PATH: O:\H8108_Lift Station Rehabilitation And Reconstruction (IDS)\6 Drawings\Electrical\Working\General\H8108_G–12.dwg

PLOTTED: 5/13/2026 6:52 PM

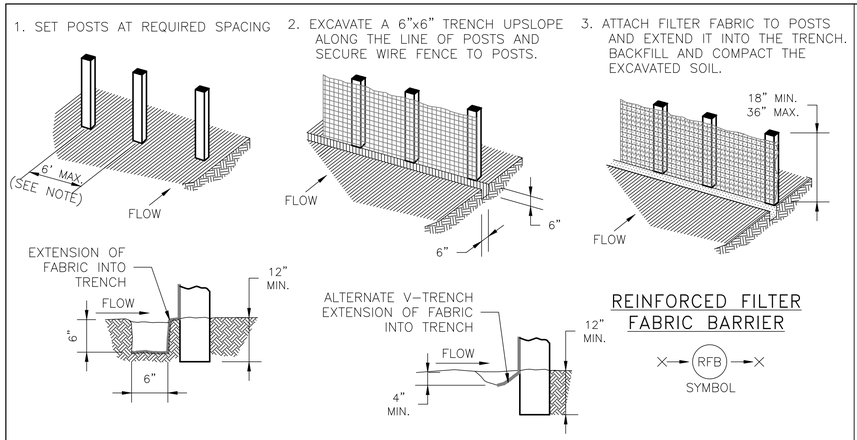

REINFORCED FILTER FABRIC BARRIER

RFB

SYMBOL

GENERAL NOTES:

1. SECURELY FASTEN MESH FENCING TO POSTS WITH STAPLES OR TIE WIRES.
2. SECURELY FASTEN FILTER FABRIC TO MESH FENCING.
3. WHEN TWO SECTIONS OF FILTER FABRIC ADJOIN EACH OTHER, OVERLAP 6 INCHES AT A POST, FOLD TOGETHER, AND ATTACH TO A POST.
4. REMOVE SEDIMENT DEPOSITS WHEN SILT REACHES ONE-THIRD OF THE HEIGHT OF THE FENCE IN DEPTH.
5. SILT FENCE MINIMUM 2' BEHIND CURB.

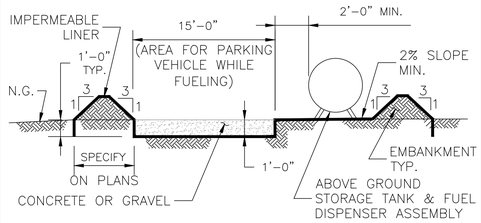

ABOVE GROUND TEMP. VEHICLE & EQUIPMENT FUELING AREA WITH TANK

TFA

SYMBOL

GENERAL NOTES:

1. THE SIZE OF TANK FOUNDATION AREA DEPENDS ON THE SIZE OF ABOVE GROUND STORAGE TANK AND DISPENSER ASSEMBLY.
2. PROVIDE A MINIMUM SLOPE OF 2 % TOWARD THE SUMP PIT.
3. INSTALL IMPERMEABLE LINER AS PER MANUFACTURER'S RECOMMENDATIONS.

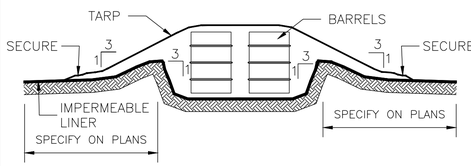

BARREL STORAGE AREA

BSA

SYMBOL

GENERAL NOTES:

1. ALTERNATIVELY, STORE BARRELS IN AN ENCLOSED BUILDING OR SHED.
2. INSTALL IMPERMEABLE LINER AS PER MANUFACTURER'S RECOMMENDATIONS. 60 mil MINIMUM.
3. CONSTRUCT BERMED AREA WITH VOLUME GREATER THAN OR EQUAL TO 110% VOLUME OF BARRELS.

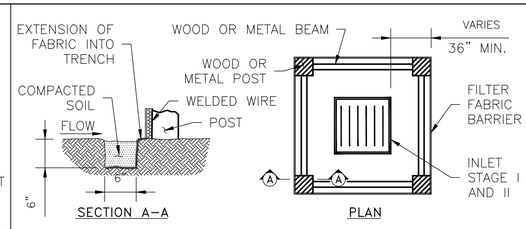

INLET PROTECTION BARRIER WITH REINFORCED FILTER FABRIC

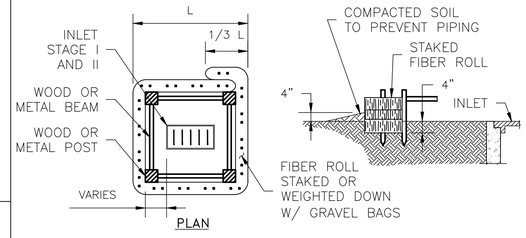

INLET PROTECTION BARRIER WITH FILTER ROLLS

GENERAL NOTES:

1. FIBER ROLLS WILL BE UTILIZED ONLY WHEN SITE CONDITIONS DO NOT PERMIT THE USE OF FILTER FABRIC BARRIER, AND AS APPROVED BY THE ENGINEER.

INLET PROTECTION BARRIERS FOR STAGE I INLETS

IPB

SYMBOL

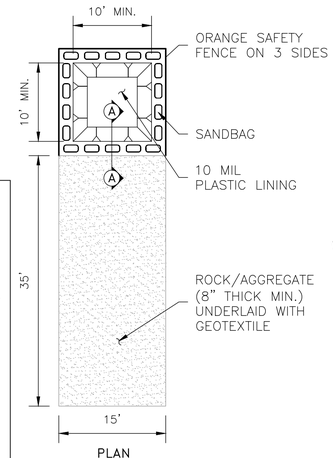

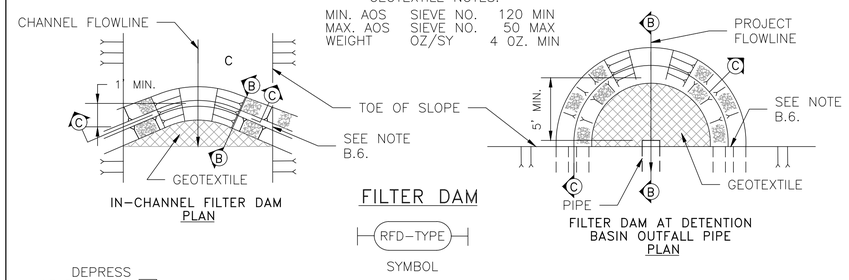

FILTER DAM

RFD-TYPE

SYMBOL

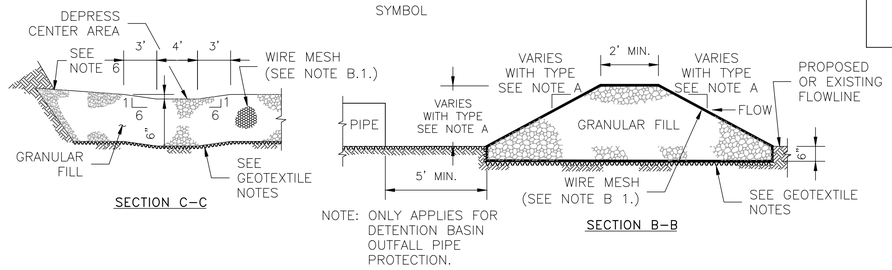

NOTE: ONLY APPLIES FOR DETENTION BASIN OUTFALL PIPE PROTECTION.

A. TYPES OF FILTER DAMS

1. TYPE 1 (NON-REINFORCED)
   a. HEIGHT – 18-24 INCHES. MEASURE VERTICALLY FROM EXISTING GROUND TO TOP OF FILTER DAM.
   b. TOP WIDTH – 2 FEET (MINIMUM)
   c. SLOPES – 2:1 (MAXIMUM).
2. TYPE 2 (REINFORCED).
   a. HEIGHT – 18-36 INCHES. MEASURE VERTICALLY FROM EXISTING GROUND TO TOP OF FILTER DAM.
   b. TOP WIDTH – 2 FEET (MINIMUM).
   c. SLOPES – 2:1 (MAXIMUM).
3. TYPE 3 (REINFORCED)
   a. HEIGHT – 36-48 INCHES. MEASURE VERTICALLY FROM EXISTING GROUND TO TOP OF FILTER DAM.
   b. TOP WIDTH – 2 FEET (MINIMUM).
   c. SLOPES – 3:1 (MAXIMUM).
4. TYPE 4 (GABION)
   a. HEIGHT – 30 INCHES (MINIMUM). MEASURE VERTICALLY FROM EXISTING GROUND TO TOP OF FILTER DAM.
   b. TOP WIDTH – 2 FEET (MINIMUM).
5. TYPE 5. AS SHOWN ON THE PLANS.

B. CONSTRUCT FILTER DAMS ACCORDING TO THE FOLLOWING CRITERIA UNLESS SHOWN OTHERWISE ON THE PLANS.

1. TYPE 2 AND 3 FILTER DAMS: SECURE WITH 20 GAUGE GALVANIZED WOVEN WIRE MESH WITH 1 INCH DIAMETER HEXAGONAL OPENINGS.
2. PLACE GRANULAR FILL ON THE WIRE MESH TO HEIGHT AND SLOPES SHOWN ON PLANS OR AS SPECIFIED BY THE ENGINEER.
   a. 3-5 INCHES FOR ROCK FILTER DAM TYPES 1, 2 AND 4.
   b. 4-8 INCHES FOR ROCK FILTER DAM TYPE REFER TO GRANULAR FILL IN SPECIFICATION SECTION No. 02378 RIPRAP AND GRANULAR FILL.
3. FOLD WIRE MESH AT UPSTREAM SIDE OVER GRANULAR FILL AND TIGHTLY SECURED TO ITSELF ON THE DOWNSTREAM SIDE USING WIRE TIES OR HOG RINGS.
4. IN STREAMS: SECURE OR STAKE MESH TO STREAM BED PRIOR TO AGGREGATE PLACEMENT.
5. SEE HCFCD SPECIFICATION SECTION NO. 02364-FILTER DAMS.
6. EMBED ONE FOOT MINIMUM INTO SLOPE AND RAISE ONE FOOT HIGHER THAN CENTER OF DEPRESSED AREA AT SLOPE.

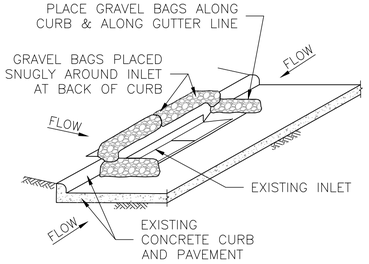

INLET PROTECTION BARRIERS FOR STAGE II INLETS

IPB-II

SYMBOL

GENERAL NOTES:

1. REMOVE SEDIMENT DEPOSIT WHEN THE SEDIMENT HAS ACCUMULATED TO ONE-THIRD THE HEIGHT OF THE BARRIER.
2. GRAVEL BAGS SHALL NOT BLOCK THROAT OF INLET UNLESS DIRECTED BY ENGINEER.

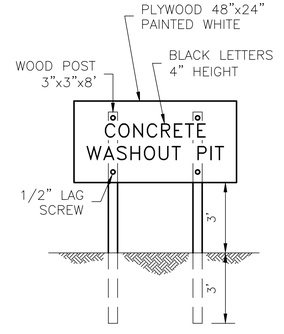

SIGN DETAIL (OR EQUIVALENT)

GENERAL NOTES:

POST A SIGN READING "CONCRETE WASHOUT PIT" NEXT TO THE PIT.

1. VERBALLY INSTRUCT THE CONCRETE TRUCK DRIVERS WHERE THE PIT IS AND TO WASHOUT THEIR TRUCKS IN THE PIT AND NOWHERE ELSE.
2. UPON THE CONCRETE SETTING UP (CURING, DRYING OUT), THE CONCRETE WASTE SHALL BE REMOVED FROM THE PROJECT SITE AND DISPOSED OF PROPERLY BY THE CONTRACTOR. AFTER REMOVAL OF THE CONCRETE WASTE, THE WASHOUT PIT SHALL BE FILLED WITH CLEAN FILL MATERIAL AND COMPACTED TO IN-SITU CONDITIONS, OR AS DIRECTED BY THE PROJECT SPECIFICATIONS.
3. CONCRETE WASHOUT PITS SHALL NOT BE LOCATED DIRECTLY ADJACENT TO, NOR AT ANY TIME DRAIN INTO THE STORM SEWER SYSTEM OR ANY OTHER SWALE, DITCH, OR WATERWAY.
4. CONSTRUCT ENTRY ROAD AND BOTTOM OF WASHOUT AREA TO SUPPORT EXPECTED LOADINGS FROM TRUCKS EQUIPMENT.

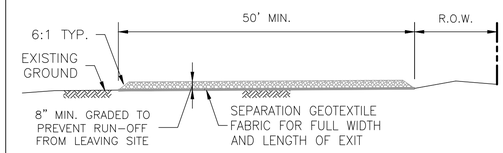

STABILIZED CONSTRUCTION ACCESS

SC-1

SYMBOL

GENERAL NOTES:

1. MINIMUM LENGTH IS AS SHOWN ON CONSTRUCTION DRAWINGS OR 50 FEET, WHICHEVER IS MORE.
2. CONSTRUCT AND MAINTAIN CONSTRUCTION EXIT WITH CONSTANT WIDTH ACROSS ITS LENGTH, INCLUDING ALL POINTS OF INGRESS OR EGRESS.
3. UNLESS SHOWN ON THE CONSTRUCTION DRAWINGS, STABILIZATION FOR OTHER AREAS WILL HAVE THE SAME AGGREGATE THICKNESS AND WIDTH REQUIREMENTS AS THE STABILIZED CONSTRUCTION EXIT.
4. WHEN SHOWN ON THE CONSTRUCTION DRAWINGS, WIDEN OR LENGTHEN STABILIZED AREA TO ACCOMMODATE A TRUCK WASHING AREA. PROVIDE OUTLET SEDIMENT TRAP FOR THE TRUCK WASHING AREA.
5. PROVIDE PERIODIC TOP DRESSING WITH ADDITIONAL COARSE AGGREGATE TO MAINTAIN THE REQUIRED DEPTH OR WHEN SURFACE BECOMES PACKED WITH MUD.
6. PERIODICALLY TURN AGGREGATE TO EXPOSE A CLEAN DRIVING SURFACE.
7. MINIMUM 14' WIDTH FOR ONE WAY TRAFFIC AND 20' WIDTH FOR TWO WAY TRAFFIC.

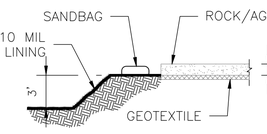

CONCRETE TRUCK WASHOUT AREA

CTW

SYMBOL

NO.	DATE	REVISION	APP.

IDS Engineering Group
13430 NW. Freeway, Suite 700
Houston, Tx. 77040
713.462.3178
TxEng Firm 2726 | TxSurv Firm 10110700

SURVEYED BY: KUO & ASSOCIATES, INC.
TBPE FIRM #F-4578; TBPLS FIRM #1007560

THIS DOCUMENT IS RELEASED FOR THE PURPOSE OF REVIEW UNDER THE AUTHORITY OF MARCEL KHOUW. P.E. 101807 ON 05/27/2026. IT IS NOT TO BE USED FOR CONSTRUCTION PURPOSES.

CITY OF HOUSTON

HOUSTON PUBLIC WORKS

LIFT STATION RENEWAL AND REPLACEMENT FY 2023

STORMWATER POLLUTION PREVENTION DETAILS

WBS NUMBER	FOR CITY OF HOUSTON USE ONLY
R-000267-0179-4	
DRAWING SCALE	
HORIZ: N.T.S. VERT: N/A	
CITY OF HOUSTON PM	
NAWARAJ PANTA, P.E.	
DWG. NO. C-29	SHEET NO. 348 OF 361

FILE PATH: \\idseg.com\FS\Projects\0000\005708500 CoH Lift Stations - FY 2023\CAD\DWG\PRODUCTION\348-SWPPP DETAILS.dwg

PLOTTED: 5/13/2026 6:52 PM

DocuSign Envelope ID: CB71C116-B716-4899-A5EE-0D2F2CC55AF6

GENERAL NOTES

1. THE CONTRACTOR SHALL PROVIDE AND INSTALL TRAFFIC CONTROL DEVICES IN CONFORMANCE WITH PART VI OF THE TEXAS MANUAL ON UNIFORM TRAFFIC CONTROL DEVICES (TMUTCD) LATEST EDITION WITH REVISIONS DURING THE ENTIRE CONSTRUCTION PERIOD.
2. ALL SIGNS AND TRAFFIC CONTROL DEVICES SHALL CONFORM THE LATEST VERSION OF THE TMUTCD.
3. NO LANES SHALL BE CLOSED DURING THE HOURS OF 7:00 AM TO 9:00 AM AND 4:00 PM TO 6:00 PM MONDAY THRU FRIDAY WITHOUT APPROVAL OF THE CITY TRAFFIC ENGINEER.
4. NO WORK SHALL BE PERFORMED IN RESIDENTIAL AREAS FROM 7:00 PM TO 7:00 AM.
5. CONTRACTOR SHALL MAINTAIN APPROVED NUMBER OF THROUGH LANES OF TRAFFIC IN EACH DIRECTION DURING CONSTRUCTION WORKING HOURS. TRAFFIC CONTROL PLANS SHALL INCLUDE ONE-WAY AND/OR DETOUR PLANS. CONTRACTOR SHALL MAINTAIN ADA COMPLIANT PEDESTRIAN ACCESS TO BUS STOPS AND ADEQUATE BUS ACCESS TO ALL THE BUS STOPS.
6. CONTRACTOR SHALL MAINTAIN TRAFFIC LANES AND DETOURS ACCORDING TO TRAFFIC CONTROL PLANS DURING WORKING HOURS.
7. CONTRACTOR SHALL COVER OPEN PAVEMENT EXCAVATIONS FOR MINOR UTILITY WORK WITH ANCHORED STEEL PLATES DURING NON-WORKING HOURS, AND OPEN LANES FOR NORMAL TRAFFIC FLOW WHEN FEASIBLE.
8. IF THE CONTRACTOR CHOOSES TO USE A DIFFERENT METHOD OF "TRAFFIC CONTROL PLANS" DURING THE CONSTRUCTION THAN WHAT IS OUTLINED IN THE CONTRACT DRAWINGS, THE CONTRACTOR SHALL BE RESPONSIBLE TO PREPARE AND SUBMIT AN ALTERNATE SET OF TRAFFIC CONTROL PLANS TO THE CITY OF HOUSTON PROJECT MANAGER FOR APPROVAL TEN WORKING DAYS PRIOR TO IMPLEMENTATION. THESE PLANS SHALL BE DRAWN TO SCALE ON REPRODUCIBLE MYLARS AND SHALL BE SEALED BY A LICENSED ENGINEER IN THE STATE OF TEXAS. OFFICE OF CITY ENGINEER, MOBILITY PERMITS SECTION REPRESENTATIVE APPROVAL IS REQUIRED TO ACCEPT THE PROPOSED CHANGES.
9. CONTRACTOR SHALL SECURE LANE/SIDEWALK/BICYCLE FACILITY CLOSURE PERMITS FROM OFFICE OF CITY ENGINEER (MOBILITY PERMIT SECTION AT https://geohub.houstontx.gov) BEFORE IMPLEMENTING THE TRAFFIC CONTROL PLAN. THE APPLICATION MUST BE SUBMITTED AT LEAST TEN DAYS PRIOR TO THE IMPLEMENTATION OF THE TRAFFIC CONTROL PLAN AND/OR BEGINNING CONSTRUCTION WORK. THE CONTRACTOR SHALL PROVIDE TRAFFIC CONTROL PLANS, CONSTRUCTION SEQUENCING, AND CONSTRUCTION SCHEDULE WITH THE APPLICATION.
10. CONTRACTOR SHALL HAVE APPROVED TRAFFIC CONTROL PLAN AND PERMIT AT THE JOB SITE FOR INSPECTION AT ALL TIMES.
11. DURING PAVEMENT SURFACE RESTORATION PROJECTS; THE CONTRACTOR SHALL NOT OPEN CLOSED LANES UNTIL THE PAVEMENT SURFACE HAS CURED ENOUGH TO ALLOW VEHICULAR TRAFFIC ACCORDING TO CITY OF HOUSTON STANDARD SPECIFICATIONS.
12. THE CONTRACTOR IS RESPONSIBLE FOR SCHEDULING AND COORDINATING ALL CONSTRUCTION ACTIVITIES WITH STAKE HOLDERS IN THE VICINITY INCLUDING EMERGENCY RESPONSE AGENCIES SUCH AS HOUSTON POLICE DEPARTMENT, HOUSTON FIRE DEPARTMENT, AND METROPOLITAN TRANSIT AUTHORITY.
13. CONTRACTOR SHALL BE RESPONSIBLE FOR ISSUING ALL WORK DIRECTIVES TO ALL SUB-CONTRACTORS, UTILITY COMPANIES, AND ALL OTHER ENTITIES PERFORMING CONSTRUCTION WORK ASSOCIATED WITH THE PROJECT.
14. NOTHING IN THESE NOTES OR PLANS SHALL RELIEVE THE CONTRACTOR OF THE RESPONSIBILITY FOR JOB SITE CONDITIONS DURING THE COURSE OF CONSTRUCTION OF THE PROJECT; INCLUDING SAFETY OF ALL MODES OF TRANSPORTATION, PERSONS, AND PROPERTY, AND THAT THIS REQUIREMENT SHALL APPLY CONTINUOUSLY AND NOT BE LIMITED TO WORKING HOURS.
15. THE OFFICE OF CITY ENGINEER (MOBILITY PERMITS GROUP) PER THE DIRECTION OF THE CITY TRAFFIC ENGINEER HAVE THE RIGHT TO DEMAND THE INSTALLATION OF ADDITIONAL TRAFFIC CONTROL DEVICES OR MODIFICATIONS OF THESE PLANS AND NOTES, AS DEEMED NECESSARY TO PROMOTE THE SAFE AND ORDERLY FLOW OF TRAFFIC, INCLUDING PEDESTRIANS AND BICYCLES, THROUGH THE CONSTRUCTION WORK ZONE. THE CONTRACTOR SHALL COMPLY WITH THESE ADDITIONAL REQUESTS OR MODIFICATIONS WITH DUE DILIGENCE.
16. ALL EXISTING TRAFFIC CONTROL SIGNS AND PAVEMENT MARKINGS SHALL BE MAINTAINED IN VISIBLE LOCATIONS DURING CONSTRUCTION UNLESS PRIOR WRITTEN APPROVAL IS OBTAINED FROM CITY OF HOUSTON PROJECT MANAGER. THE CONTRACTOR SHALL RESTORE OR REPLACE (AT THE DISCRETION OF THE CITY TRAFFIC ENGINEER) ANY PAVEMENT MARKING OR SIGNING DAMAGE DURING CONSTRUCTION OPERATIONS, INCLUDING RAISED PAVEMENT MARKERS (RPMS).
17. WHEN ENTERING OR LEAVING ROADWAYS CARRYING PUBLIC TRAFFIC, THE CONTRACTOR'S EQUIPMENT, WHETHER EMPTY OR LOADED SHALL IN ALL CASES YIELD TO PUBLIC TRAFFIC WITH THE ASSISTANCE OF CONTRACTOR PROVIDED CERTIFIED FLAGGER/PEACE OFFICER.
18. ACCESS TO DRIVEWAYS ADJACENT TO THE CONSTRUCTION WORK ZONE SHALL BE MAINTAINED AT ALL TIMES AS MUCH AS POSSIBLE. ADDITIONAL CONES AND/OR DELINEATORS MAY BE REQUIRED TO DELINEATE THE DRIVEWAY ACCESS ROUTE THROUGH THE CONSTRUCTION WORK ZONE. A MINIMUM OF ONE TRAVEL LANE SHALL BE MAINTAINED ACROSS THE DRIVEWAYS, UNLESS PRIOR WRITTEN APPROVAL IS OBTAINED FROM CITY OF HOUSTON PROJECT MANAGER.
19. SPILLAGE RESULTING FROM HAULING OPERATIONS ALONG OR ACROSS ANY PUBLIC TRAVELED WAY SHALL BE REMOVED IMMEDIATELY BY THE CONTRACTOR.
20. THE CONTRACTOR SHALL SUBMIT AN APPLICATION FOR TEMPORARY PARKING RESTRICTIONS IF THERE ARE PARKING METERS LOCATED AT THE PROPOSED LANE CLOSURES FROM PARKING MANAGEMENT DIVISION (832-393-8690) AT LEAST TEN BUSINESS DAYS BEFORE IMPLEMENTATION OF LANE CLOSURES. IN ADDITION, TEMPORARY NO PARKING SIGNS SHALL BE POSTED 24 HOURS PRIOR TO COMMENCEMENT OF WORK.
21. ADDITIONAL OFF DUTY OFFICERS/FLAGGERS MAY BE REQUESTED TO DIRECT TRAFFIC WHEN LANES ARE BLOCKED AT THE DISCRETION OF THE CITY PROJECT MANAGER EVEN IF THEY ARE NOT SPECIFICALLY IDENTIFIED ON THE PROJECT PLANS.
22. THE CONTRACTOR SHALL REPLACE WITHIN 72 HOURS, ALL TRAFFIC SIGNAL LOOP DETECTORS DAMAGED DURING CONSTRUCTION.
23. IN GENERAL, A SOLAR POWERED FLASHING ARROW BOARD SHALL BE REQUIRED ON ALL MAJOR THOROUGHFARE LANES CLOSURES. EXCEPTIONS TO FLASHING ARROW BOARDS AND/OR IMPLEMENTATION ON RESIDENTIAL LANE CLOSURES SHALL BE APPROVED BY CITY TRAFFIC ENGINEER.
24. APPROVED TRAFFIC CONTROL PLAN SHALL BE IN PLACE BEFORE STARTING ANY EXCAVATION.
25. WATER FILLED BARRIERS CAN BE USED AS INSTRUCTED BY THE ENGINEER AND APPROVED BY THE CITY FOR PROJECTS WHERE SPACE IS LIMITED AND HEAVY EQUIPMENT TO PLACE CONCRETE BARRIERS IS NOT FEASIBLE. WATER FILLED BARRIERS SHALL NOT BE USED ON ROADWAYS WITH A POSTED SPEED LIMIT MORE THAN 45 MPH.
26. WATER FILLED BARRIERS MUST BE INSTALLED AND MAINTAINED PER THE MANUFACTURER'S REQUIREMENTS AND ROUTINELY INSPECTED FOR DEFECTS.
27. IF WATER FILLED BARRIER IS PROVIDED, USE ENVIRONMENTALLY SAFE ANTI-FREEZING AGENT IN THE WATER WHEN IT IS APPLICABLE PER MANUFACTURER SPECIFICATIONS AND RECOVER AGENT WHEN THE BARRIER IS DRAINED.
28. DISPOSE OF WATER AND AGENT PROPERLY. DO NOT DRAIN WATER FILLED BARRIER INTO OR ACROSS AN EXISTING TRAVEL LANE.
29. PROVIDE BARRIER UNITS THAT ARE CAPABLE OF BEING LIFTED AND MOVED WHEN FILLED IF DRAINING IS NOT POSSIBLE.
30. PROVIDE WATER FILLED BARRIER THAT ACTS AS ITS OWN FREE STANDING, NON-REDIRECTIVE END TREATMENT.
31. WHEN WATER FILLED BARRIERS ARE USED TO CHANNELIZE PEDESTRIANS, THEY MUST HAVE A CONTINUOUS DETECTABLE BOTTOM FOR USERS OF LONG CANES AND THE TOP OF THE UNIT SHALL NOT BE LESS THAN 32 INCHES IN HEIGHT.
32. ANY CLOSURE OF A PEDESTRIAN OR BICYCLE FACILITY SHALL REQUIRE THE SHORTEST DETOUR THAT MAINTAINS THE SAFETY OF PEDESTRIAN AND/OR BICYCLISTS.

SPACING FOR CHANNELIZING DEVICES

A. PLASTIC DRUMS ON MERGING TAPER @ 30' C – C WITH CHEVRON SIGN @ 60' C – C AND WARNING LIGHTS FOR OVERNIGHT CLOSURE.

B. PLASTIC DRUMS ON DOWNSTREAM TAPER @ 30' C – C (RETURN TAPER AND BARRICADE ARE OPTIONAL AND DIVIDED ROADWAY SECTION)

C. PLASTIC DRUMS ON RADII @ 35' C –C.

D. PLASTIC DRUMS ON TANGENT @ 35' C – C WITH VERTICAL PANEL AT 70' C – C AND APPROVED WARNING LIGHT @ 70' C – C (FOR OVERNIGHT CLOSURE).

E. PLASTIC DRUMS IN FRONT OF CONSTRUCTION ZONE @ 20' C – C WITH VERTICAL PANEL AT 40' C – C AND APPROVED WARNING LIGHT @ 40' C – C (FOR OVERNIGHT CLOSURE).

F. CONCRETE TRAFFIC BARRIER (CTB) OR LOW PROFILE CONCRETE TRAFFIC BARRIER (LPCTB) WITH APPROVED REFLECTORS @ 10' C – C IF PAVEMENT DROP IS GREATER THAN 1 FOOT.

G. PLASTIC DRUMS W/GUARD RAIL MOUNTED.

H. SELF- RIGHTING VERTICAL PANEL SPACING.
- 4 LANES TO 2 LANES UNDIVIDED ROADWAY SECTION @ 20' C – C.
- 4 LANES DIVIDED ROADWAY TO ONE SIDE TWO WAY ROADWAY @ 20' C – C.
- LEFT LANE AND RIGHT LANE STORAGE BAYS @ 15' C – C.

I. SPACING SHOWN ON TRAFFIC CONTROL SHALL SUPERSEDE THE ABOVE SPACING.

J. SPACING MAY BE ADJUSTED TO PROVIDE DRIVEWAYS, INTERSECTIONS AND /OR MEDIAN OPENINGS.

TABLE C3 – TYPICAL SIGN SPACING, TAPER LENGTHS, AND SUGGESTED SPACING OF CHANNELIZATION DEVICES

POSTED SPEED (MPH)	SIGN SPACING "X" (FEET)	MIN. DESIRABLE TAPER LENGTH "L"			SUGGESTED MAXIMUM SPACING OF DEVICE	
		10' OFFSET	11' OFFSET	12' OFFSET	ON A TAPER	ON A TANGENT
30	120'	150'	165'	180'	30'	60'–75'
35	160'	205'	225'	245'	35'	70'–90'
40	240'	265'	295'	320'	40'	80'–100'
45	320'	450'	495'	540'	45'	90'–110'
50	400'	500'	550'	600'	50'	100'–125'
55	500'	550'	605'	660'	55'	110'–140'

TABLE C4 – STOPPING SIGHT DISTANCE AS A FUNCTION OF SPEED

POSTED SPEED (MPH)	DISTANCE "D" (FEET)
30	200
35	250
40	305
45	360
50	425
55	495

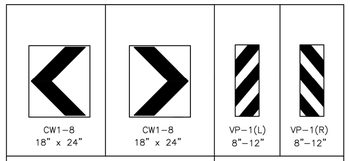

CHANNELIZATION AND BARRICADES

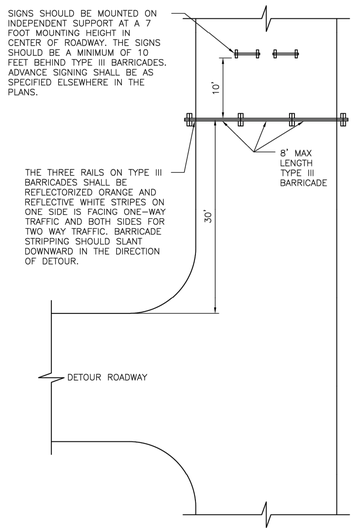

PLAN VIEW
TYPE III BARRICADE (POST AND SKID)
TYPICAL APPLICATION

LEGEND:

- SIGN
- FLAGGER
- APPROVED CHANNELIZATION DEVICE
- BARRICADE
- FLASHING ARROW PANEL
- AREA UNDER CONSTRUCTION
- EXISTING TRAVEL WAY
- TRAFFIC CONTROL PLAN DETOUR TRAVEL WAY

NO.	DATE	REVISION	APP.

APPROVED BY:	APPROVED BY:
DocuSigned by: Suhail Kanwar 9EF6B0C6415478...	DocuSigned by: LINHING NGUYEN 95A29EFDA7084C0...
CITY ENGINEER	CITY TRAFFIC ENGINEER
APPROVED BY: DocuSigned by: Carol Haddock 4B0C41A5F7B5466...	
DIRECTOR OF HOUSTON PUBLIC WORKS	
EFF DATE: NOV–27–2023	DWG NO: 01555–01

CITY OF HOUSTON
HOUSTON PUBLIC WORKS STANDARD

TCP NOTES CHANNELIZING DEVICES AND BARRICADES

FOR CITY OF HOUSTON USE ONLY

DRAWING SCALE
NOT TO SCALE

IDS Engineering Group
13430 NW. Freeway, Suite 700
Houston, Tx. 77040
713.462.3178
TxEng Firm 2726 | TxSurv Firm 10110700

SURVEYED BY: KUO & ASSOCIATES, INC.
TBPE FIRM #F-4578; TBPLS FIRM #1007560

THIS DOCUMENT IS RELEASED FOR THE PURPOSE OF REVIEW UNDER THE AUTHORITY OF MARCEL KHOUW, P.E. 101807 ON 05/27/2026. IT IS NOT TO BE USED FOR CONSTRUCTION PURPOSES.

CITY OF HOUSTON
HOUSTON PUBLIC WORKS

LIFT STATION RENEWAL AND REPLACEMENT FY 2023

TCP NOTES CHANNELIZING DEVICES AND BARRICADES

WBS NUMBER	FOR CITY OF HOUSTON USE ONLY
R–000267–0179–4	
DRAWING SCALE	
HORIZ: N/A VERT: N/A	
CITY OF HOUSTON PM	
NAWARAJ PANTA, P.E.	
SHEET NO. 349 OF 361	

DWG. NO.
TCP–01

DISCLAIMER:
THE USE OF THIS STANDARD IS GOVERNED BY THE TEXAS ENGINEERING PRACTICE ACT. THE DESIGN REQUIREMENTS ON THIS STANDARD DO NOT PURPORT TO ADDRESS ALL OF THE SAFETY CONCERNS ASSOCIATED WITH THEIR USE. THE ENGINEER OF RECORD (EOR) IS TO REVIEW THESE DESIGN REQUIREMENTS AND BY AUTHORIZING THEIR USE, ACCEPTS RESPONSIBILITY FOR THE APPLICABILITY, ADEQUACY AND SAFETY. NO WARRANTY OF ANY KIND IS MADE BY THE CITY OF HOUSTON FOR ANY PURPOSES WHATSOEVER. THE CITY OF HOUSTON ASSUMES NO RESPONSIBILITY FOR INCORRECT RESULTS OR DAMAGES RESULTING FROM ITS USE.

FILE PATH: \\tdseg.com\FS\Projects\0000\005708500 CoH Lift Stations – FY 2023\CAD\DWG\PRODUCTION\349–TCP NOTES.dwg

PLOTTED: 5/13/2026 6:52 PM

DocuSign Envelope ID: CB71C116-B716-4899-A5EE-0D2F2CC55AF6

NO.	DATE	REVISION	APP.

A	D	I	J
ROAD WORK AHEAD	END ROAD WORK	RIGHT LANE CLOSED	LEFT LANE CLOSED
CW20-1	G20-2	AHEAD CW20-5(2) CW16-3	AHEAD CW20-5(1) CW16-3

PHASE 1

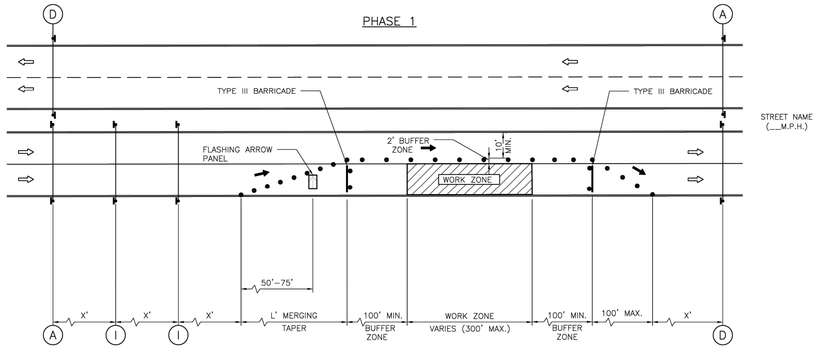

PHASE 2

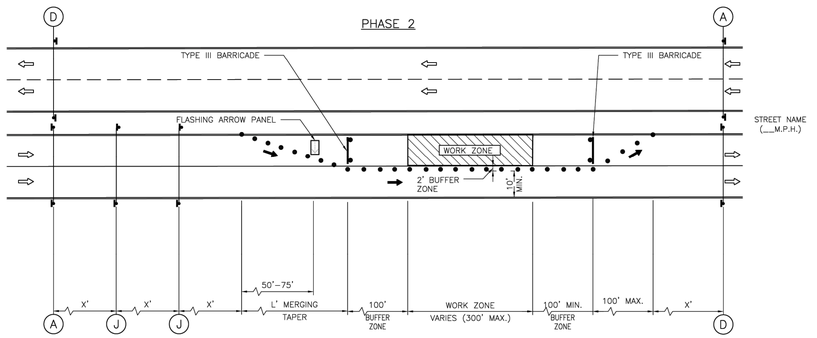

LEGEND:

- SIGN
- FLAGGER
- APPROVED CHANNELIZATION DEVICE
- BARRICADE
- FLASHING ARROW PANEL
- AREA UNDER CONSTRUCTION
- EXISTING TRAVEL WAY
- TRAFFIC CONTROL PLAN DETOUR TRAVEL WAY

NOTES:

1. RETURN TAPERS AND DOWNSTREAM BARRICADES ARE OPTIONAL ON A DIVIDED ROADWAY SECTION.
2. DOUBLE SIGNS SHALL BE USED ONLY ON ROADWAYS WITH MEDIANS.
3. FOR DIMENSIONS REFER TO SHEET 01555-01.
4. INSTALL FLASHERS ON DRUMS WHERE REQUIRED AND APPROVED BY CITY TRAFFIC ENGINEER.

APPROVED BY:	APPROVED BY:
DocuSigned by: Sukat Barawar — 8E1B5D3C4F3A7A...	DocuSigned by: Hailing Nguyen — 9BA3B57D67B84C3...
CITY ENGINEER	CITY TRAFFIC ENGINEER
APPROVED BY: DocuSigned by: Carl Haddock — 4B5C1A2E3F6D7...	
DIRECTOR OF HOUSTON PUBLIC WORKS	
EFF DATE: NOV-27-2023	DWG NO: 01555-04

CITY OF HOUSTON
HOUSTON PUBLIC WORKS STANDARD

TCP ONE LANE CLOSURE
PHASE 1 & 2

	FOR CITY OF HOUSTON USE ONLY
DRAWING SCALE	
NOT TO SCALE	

IDS Engineering Group
13430 NW. Freeway, Suite 700
Houston, Tx. 77040
713.462.3178
TxEng Firm 2726 | TxSurv Firm 10110700

THIS DOCUMENT IS RELEASED FOR THE PURPOSE OF REVIEW UNDER THE AUTHORITY OF MARCEL KHOUW, P.E. 101807 ON 05/27/2026. IT IS NOT TO BE USED FOR CONSTRUCTION PURPOSES.

SURVEYED BY: KUO & ASSOCIATES, INC.
TBPE FIRM #F-4578; TBPLS FIRM #1007560

CITY OF HOUSTON
HOUSTON PUBLIC WORKS

LIFT STATION RENEWAL AND REPLACEMENT FY 2023

TCP ON-LANE CLOSURE PHASE 1 & 2

WBS NUMBER	FOR CITY OF HOUSTON USE ONLY
R-000267-0179-4	
DRAWING SCALE	
HORIZ: N/A VERT: N/A	
CITY OF HOUSTON PM	
NAWARAJ PANTA, P.E.	
SHEET NO. 350 OF 361	

DWG. NO.
TCP-02

DISCLAIMER:
THE USE OF THIS STANDARD IS GOVERNED BY THE TEXAS ENGINEERING PRACTICE ACT. THE DESIGN REQUIREMENTS ON THIS STANDARD DO NOT PURPORT TO ADDRESS ALL OF THE SAFETY CONCERNS ASSOCIATED WITH THEIR USE. THE ENGINEER OF RECORD (EOR) IS TO REVIEW THESE DESIGN REQUIREMENTS AND BY AUTHORIZING THEIR USE ACCEPTS RESPONSIBILITY FOR THEIR APPLICABILITY, ADEQUACY AND SAFETY. NO WARRANTY OF ANY KIND IS MADE BY THE CITY OF HOUSTON FOR ANY PURPOSES WHATSOEVER. THE CITY OF HOUSTON ASSUMES NO RESPONSIBILITY FOR INCORRECT RESULTS OR DAMAGES RESULTING FROM ITS USE.

FILE PATH: \\tdseg.com\FS\Projects\0000\005708500 CoH Lift Stations - FY 2023\CAD\DWG\PRODUCTION\350-TCP ONE-LANE CLOSURE.dwg

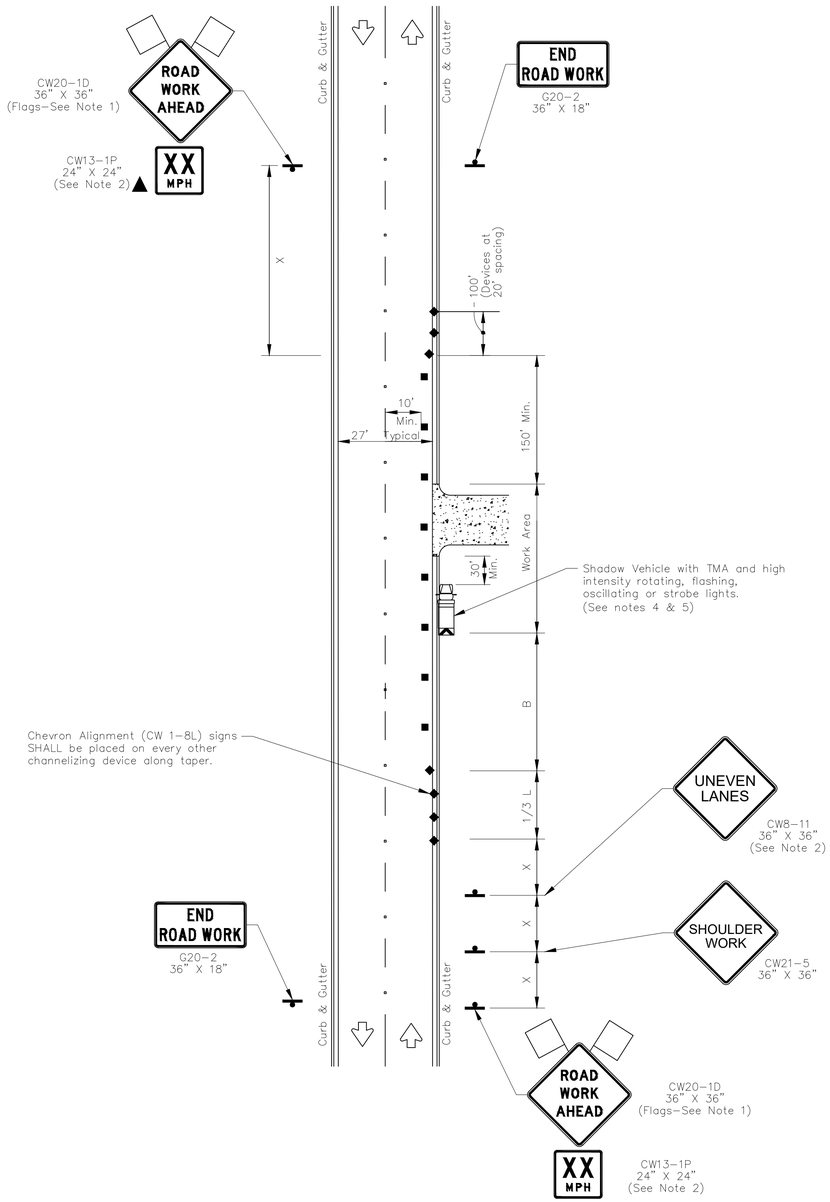

DRIVEWAY TIE-IN ON TWO-LANE ROAD

TRAFFIC CONTROL PLAN SECTION SHALL BE COMPLETED BY ENGINEER

ROADWAY	POSTED SPEED	TAPER LENGTH	SPACING CHANNELIZING DEVICES		SIGN SPACING	BUFFER SPACE
			TAPER	TANGENT		
LOCKWOOD	35		35'	70'	160'	120'
SCOTT #3	35		35'	70'	160'	120'
WOODFOREST	40		30'	60'	120'	90'

LEGEND

	Type 3 Barricade		Channelizing Devices
	Heavy Work Vehicle		Truck Mounted Attenuator (TMA)
	Trailer Mounted Flashing Arrow Board	M	Portable Changeable Message Sign (PCMS)
	Sign		Traffic Flow
	Flag		Flagger

Posted Speed *	Formula	Minimum Desirable Taper Lengths "L" * *			Suggested Maximum Spacing of Channelizing Devices		Minimum Sign Spacing "X" Distance	Suggested Longitudinal Buffer Space "B"
		10' Offset	11' Offset	12' Offset	On a Taper	On a Tangent		
30	$L=\frac{WS^2}{60}$	150'	165'	180'	30'	60'	120'	90'
35		205'	225'	245'	35'	70'	160'	120'
40		265'	295'	320'	40'	80'	240'	155'
45	L=WS	450'	495'	540'	45'	90'	320'	195'
50		500'	550'	600'	50'	100'	400'	240'
55		550'	605'	660'	55'	110'	500'	295'
60		600'	660'	720'	60'	120'	600'	350'
65		650'	715'	780'	65'	130'	700'	410'
70		700'	770'	840'	70'	140'	800'	475'
75		750'	825'	900'	75'	150'	900'	540'

* Conventional Roads Only

* * Taper lengths have been rounded off.
L=Length of Taper(FT) W=Width of Offset(FT) S=Posted Speed(MPH)

GENERAL NOTES

1. Flags attached to signs where shown are OPTIONAL.
2. All traffic control devices illustrated are REQUIRED, except those denoted with the triangle symbol are OPTIONAL.
3. Inactive work vehicles or other equipment should be parked near the right-of-way line and not parked on the paved shoulder.
4. A Shadow Vehicle with a TMA should be used anytime it can be positioned 30 to 100 feet in advance of the area of crew exposure without adversely affecting the performance or quality of the work. If workers are no longer present but road or work conditions require the traffic control to remain in place, Type 3 Barricades or other channelizing devices may be substituted for the Shadow Vehicle and TMA.
5. Additional Shadow Vehicles with TMAs may be positioned off the paved surface, next to those shown in order to protect wider work spaces.
6. Contractor shall provide and install traffic control devices in conformance with part VI of Texas Manual on Uniform Traffic Control Devices (TMUTCD – Latest edition with revisions) during construction.
7. No lanes shall be blocked during construction.
8. If project is within 400 feet from a signalized intersection, the Contractor shall contact the Engineer at (832) 590-7117 or (832) 590-7175 five (5) days prior to the start of construction.

NO.	DATE	REVISION	APP.

IDS Engineering Group
13430 NW. Freeway, Suite 700
Houston, Tx. 77040
713.462.3178
TxEng Firm 2726 | TxSurv Firm 10110700

SURVEYED BY: KUO & ASSOCIATES, INC.
TBPE FIRM #F-4578; TBPLS FIRM #1007560

THIS DOCUMENT IS RELEASED FOR THE PURPOSE OF REVIEW UNDER THE AUTHORITY OF MARCEL KHOUW, P.E. 101807 ON 05/27/2026. IT IS NOT TO BE USED FOR CONSTRUCTION PURPOSES.

CITY OF HOUSTON
HOUSTON PUBLIC WORKS

LIFT STATION RENEWAL AND REPLACEMENT FY 2023

DRIVEWAY TIE-IN ON TWO-LANE ROAD

WBS NUMBER	FOR CITY OF HOUSTON USE ONLY
R-000267-0179-4	
DRAWING SCALE	
HORIZ: N.T.S. VERT: N/A	
CITY OF HOUSTON PM	
NAWARAJ PANTA, P.E.	
SHEET NO. 351 OF 361	

DWG. NO. TCP-03

PLOTTED: 5/13/2026 6:52 PM
FILE PATH: \\idseg.com\FS\Projects\0000\005708500 CoH Lift Stations - FY 2023\CAD\DWG\PRODUCTION\351-TCP DRIVEWAY TIE-IN.dwg

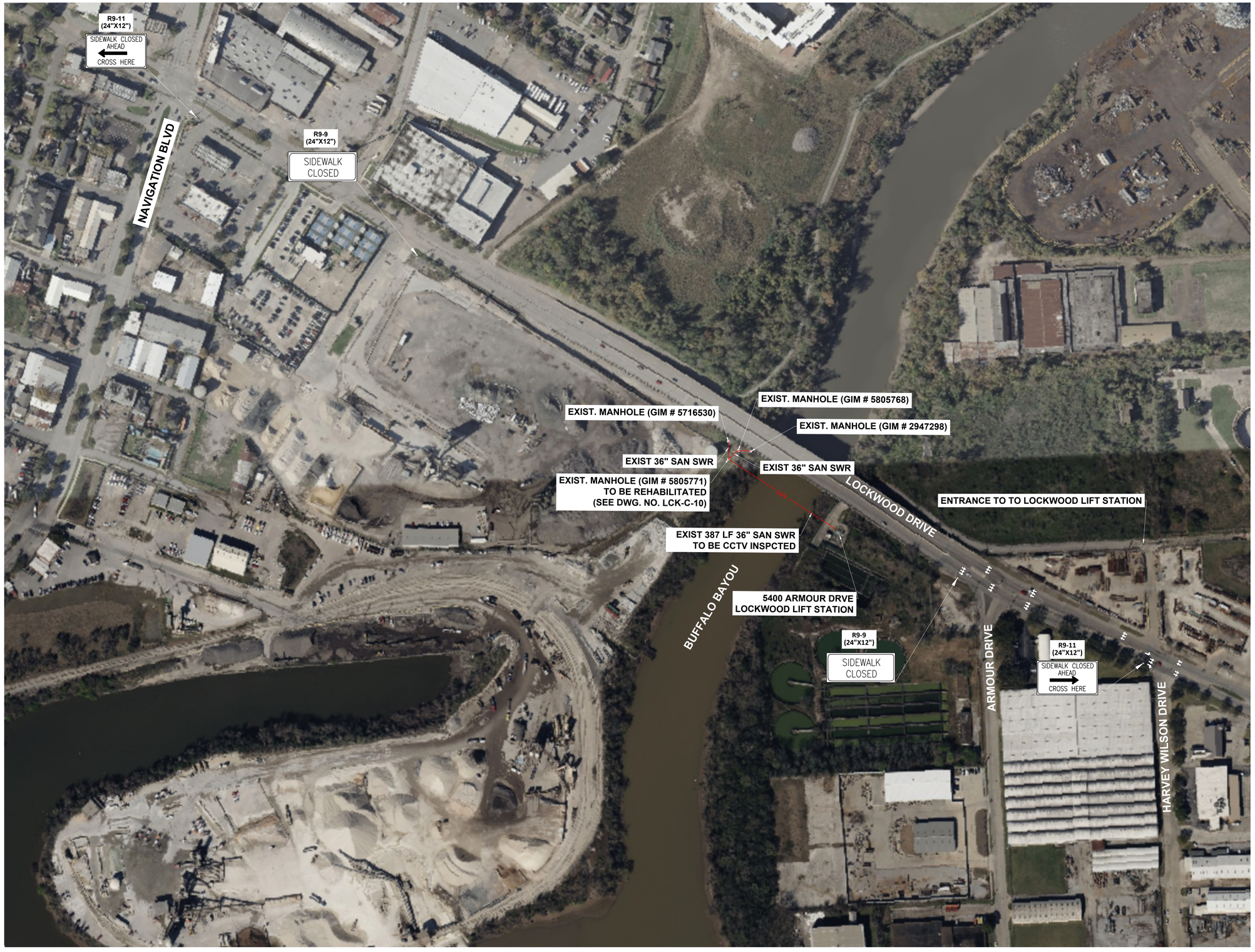

N.T.S.

LEGEND

PROPOSED TRAFFIC PATTERN

CONSTRUCTION ZONE

NO.	DATE	REVISION	APP.

IDS Engineering Group
13430 NW. Freeway, Suite 700
Houston, Tx. 77040
713.462.3178
TxEng Firm 2726 | TxSurv Firm 10110700

SURVEYED BY: KUO & ASSOCIATES, INC.
TBPE FIRM #F-4578; TBPLS FIRM #1007560

THIS DOCUMENT IS RELEASED FOR THE PURPOSE OF REVIEW UNDER THE AUTHORITY OF MARCEL KHOUW, P.E. 101807 ON 05/27/2026. IT IS NOT TO BE USED FOR CONSTRUCTION PURPOSES.

CITY OF HOUSTON
HOUSTON PUBLIC WORKS

LIFT STATION RENEWAL AND REPLACEMENT FY 2023

TRAFFIC CONTROL PLAN LOCKWOOD LIFT STATION

WBS NUMBER	FOR CITY OF HOUSTON USE ONLY
R-000267-0179-4	
DRAWING SCALE	
HORIZ: N.T.S. VERT: N/A	
CITY OF HOUSTON PM	
NAWARAJ PANTA, P.E.	
SHEET NO. 352 OF 361	

DWG. NO.
TCP-04

PLOTTED: 5/13/2026 6:52 PM

FILE PATH: \\idseg.com\FS\Projects\0000\005708500 CoH Lift Stations - FY 2023\CAD\DWG\PRODUCTION\352-TRAFFIC CONTROL PLAN - LOCKWOOD LIFT STATION.dwg

PLOTTED: 5/13/2026 6:52 PM

FILE PATH: \\idseg.com\FS\Projects\0000\0005708500 CoH Lift Stations - FY 2023\CAD\DWG\PRODUCTION\353-TRAFFIC CONTROL PLAN - SCOTT STREET LIFT STATION.dwg



NO.	DATE	REVISION	APP.

N.T.S.

LEGEND

⇨ PROPOSED TRAFFIC PATTERN

CONSTRUCTION ZONE

NOTES:

1. CLOSURE OF THE ESPLANADE AND INSIDE LANE CLOSURE NOT TO OCCUR AT THE SAME TIME AS THE PROPOSED OUTSIDE LANE CLOSURE. CONTRACTOR TO MAINTAIN ONE SOUTHBOUND LANE ON SCOTT STREET AT ALL TIMES.

IDS Engineering Group
13430 NW. Freeway, Suite 700
Houston, Tx. 77040
713.462.3178
TxEng Firm 2726 | TxSurv Firm 10110700

THIS DOCUMENT IS RELEASED FOR THE PURPOSE OF REVIEW UNDER THE AUTHORITY OF MARCEL KHOUW, P.E. 101807 ON 05/27/2026. IT IS NOT TO BE USED FOR CONSTRUCTION PURPOSES.

SURVEYED BY: KUO & ASSOCIATES, INC.
TBPE FIRM #F-4578; TBPLS FIRM #1007560

CITY OF HOUSTON
HOUSTON PUBLIC WORKS

LIFT STATION RENEWAL AND REPLACEMENT FY 2023

TRAFFIC CONTROL PLAN SCOTT STREET NO. 3 LIFT STATION

WBS NUMBER	FOR CITY OF HOUSTON USE ONLY
R-000267-0179-4	
DRAWING SCALE	
HORIZ: N.T.S. VERT: N/A	
CITY OF HOUSTON PM	
NAWARAJ PANTA, P.E.	
DWG. NO. TCP-05	SHEET NO. 353 OF 361

PLOTTED: 5/13/2026 6:52 PM

FILE PATH: \\tdseg.com\FS\Projects\0000\005708500 CoH Lift Stations - FY 2023\CAD\DWG\PRODUCTION\354-TRAFFIC CONTROL PLAN - MARKET STREET LIFT STATION.dwg



N.T.S.

NO.	DATE	REVISION	APP.

IDS Engineering Group
13430 NW. Freeway, Suite 700
Houston, Tx. 77040
713.462.3178
TxEng Firm 2726 | TxSurv Firm 10110700

SURVEYED BY: KUO & ASSOCIATES, INC.
TBPE FIRM #F-4578; TBPLS FIRM #1007560

THIS DOCUMENT IS RELEASED FOR THE PURPOSE OF REVIEW UNDER THE AUTHORITY OF MARCEL KHOUW. P.E. 101807 ON 05/27/2026. IT IS NOT TO BE USED FOR CONSTRUCTION PURPOSES.

CITY OF HOUSTON
HOUSTON PUBLIC WORKS

LIFT STATION RENEWAL AND REPLACEMENT FY 2023

TRAFFIC CONTROL PLAN MARKET STREET NO. 2 LIFT STATION

WBS NUMBER	FOR CITY OF HOUSTON USE ONLY
R-000267-0179-4	
DRAWING SCALE	
HORIZ: N.T.S. VERT: N/A	
CITY OF HOUSTON PM	
NAWARAJ PANTA, P.E.	

DWG. NO.	SHEET NO. 354 OF 361
TCP-06	

PLOTTED: 5/13/2026 6:52 PM
FILE PATH: \\tdseg.com\FS\Projects\0000\005708500 CoH Lift Stations - FY 2023\CAD\DWG\PRODUCTION\355-TRAFFIC CONTROL PLAN - WOODFOREST LIFT STATION.dwg



N.T.S.

NO.	DATE	REVISION	APP.

IDS Engineering Group
13430 NW. Freeway, Suite 700
Houston, Tx. 77040
713.462.3178
TxEng Firm 2726 | TxSurv Firm 10110700

SURVEYED BY: KUO & ASSOCIATES, INC.
TBPE FIRM #F-4578; TBPLS FIRM #1007560

THIS DOCUMENT IS RELEASED FOR THE PURPOSE OF REVIEW UNDER THE AUTHORITY OF MARCEL KHOUW. P.E. 101807 ON 05/27/2026. IT IS NOT TO BE USED FOR CONSTRUCTION PURPOSES.

CITY OF HOUSTON
HOUSTON PUBLIC WORKS

LIFT STATION RENEWAL AND REPLACEMENT FY 2023

TRAFFIC CONTROL PLAN WOODFOREST LIFT STATION

WBS NUMBER	FOR CITY OF HOUSTON USE ONLY
R-000267-0179-4	
DRAWING SCALE	
HORIZ: N.T.S. VERT: N/A	
CITY OF HOUSTON PM	
NAWARAJ PANTA, P.E.	

DWG. NO.	SHEET NO. 355 OF 361
TCP-07	

PLOTTED: 4/21/2026 6:37 PM



60' 0' 60'
SCALE
1" = 60'

NO.	DATE	REVISION	APP.

NOTE:

1. THIS TREE PROTECTION PLAN WAS DEVELOPED WITH INFORMATION PROVIDED BY DESIGN ENGINEER IN DRAWINGS DATED APRIL 2026. THE PLAN CONSIDERS ALL FITTINGS, VERTICAL OFFSETS AND AREAS OF NECESSARY EXCAVATION. CHANGES MADE TO DESIGN MAY COMPROMISE THE TREE PROTECTION PLAN. REFER SPECIFICATIONS 01562 AND 02915. CONDITION OF EACH TREE IS BASED ON VISUAL EVALUATION AT TIME OF DESIGN. CONDITION AND STRUCTURAL INTEGRITY OF EACH TREE IS NOT GUARANTEED BY DESIGNER AT ANY POINT IN THE FUTURE, AS ENVIRONMENTAL AND MAINTENANCE INFLUENCES ON EACH TREE CAN NOT BE DETERMINED BY DESIGNER.
2. CN KOEHL URBAN FORESTRY, INC. HAS NOT BEEN CONTRACTED TO COMPLETE ANY TREE RISK ASSESSMENTS ON THIS PROJECT–THIS TPP INCLUDES PROTECTION MEASURES FOR SPECIES OF TREES PROTECTED BY APPLICABLE ORDINANCE ONLY. CN KOEHL URBAN FORESTRY, INC. DOES NOT GUARANTEE CONDITION OR STRUCTURAL INTEGRITY OF ANY TREES LOCATED ON OR ADJACENT TO THIS PROJECT.
3. IN AREA WHERE INDIVIDUAL TREES HAVE NOT BEEN TIED IN BY SURVEY APPROXIMATE LOCATION IS INDICATED ON TPP WITH A DOT AND TREE NUMBER. ACCURACY OF REPRESENTED LOCATION IS NOT GUARANTEED BY CN KOEHL URBAN FORESTRY, INC.

Tree No.	Location	Description	Chapter 33 Status	Comments	Treatment
Trees on Lockwood Lift station Site					
1	Not available	10" Live Oak	Not protected	Private tree	Clearance prune
2	Not available	13" Live Oak	Not protected	Private tree	Clearance prune
3	Not available	15" Mulberry	Not protected	Remove in clearing&grubbing	Remove tree, No replacement required
4	Not available	10" Mulberry	Not protected	Remove in clearing&grubbing	Remove tree, No replacement required
5	Not available	5" Lacebark Elm	Protected	Remove in clearing&grubbing	Remove tree, Provide 5" in replacement or mitigation
6	Not available	8" Lacebark Elm	Protected	Remove in clearing&grubbing	Remove tree, Provide 8" in replacement or mitigation
7	Not available	6" Lacebark Elm	Protected	Remove in clearing&grubbing	Remove tree, Provide 6" in replacement or mitigation
8	Not available	4" Sugarberry	Not protected	Remove in clearing&grubbing	Remove tree, No replacement required
9	Not available	8" Sugarberry	Not protected	Remove in clearing&grubbing	Remove tree, No replacement required

TREE PRESERVATION PLAN LEGEND

- 1 — TREE NUMBER/LOCATION
- (1) — TREE TO BE REMOVED
- —X— TREE PROTECTION FENCE

C.N. Koehl
Urban Forestry, Inc.
210 Stone Bush Ct. • Katy, Texas 77493
281-391-0022 ckoehl@koehlurbanforestry.com

APPROVED:

IDS Engineering Group
13430 NW. Freeway
Suite 700
Houston, Tx. 77040
713.462.3178
TxEng Firm 2726
TxSurv Firm 10110700

CITY OF HOUSTON
HOUSTON PUBLIC WORKS

LIFT STATION RENEWAL AND REPLACEMENT FY 2023

TREE PROTECTION PLAN SHEET 1 OF 6

WBS NUMBER	FOR CITY OF HOUSTON USE ONLY
X–000X00–0000–X	
DRAWING SCALE	
HORIZ: 1"=40' VERT:	
CITY OF HOUSTON PM	
NAWARAJ PANTA, P.E.	
SHEET NO. 356 OF 361	

DWG. NO. TPP–01

FILE PATH: C:\Users\Ned\Desktop\UPCOMING PROJECTS\IDS WBS No. R-000267-0179-4 LIFT STATION\01-LOCKWOOD SITE ACCESS-TP.dwg

IDS JOB No. 0057-085-00

PLOTTED: 4/21/2026 6:37 PM

Tree No.	Location	Description	Chapter 33 Status	Comments	Treatment
Trees on Lockwood Lift station Site					
9	Not available	8" Sugarberry	Not protected	Remove in clearing&grubbing	Remove tree, No replacement required
10	Not available	10" Sugarberry	Not protected		Clearance prune
11	Not available	17" Sugarberry	Not protected	Private tree, Not impacted	
12	Not available	9" Sugarberry	Not protected	Private tree	Clearance prune

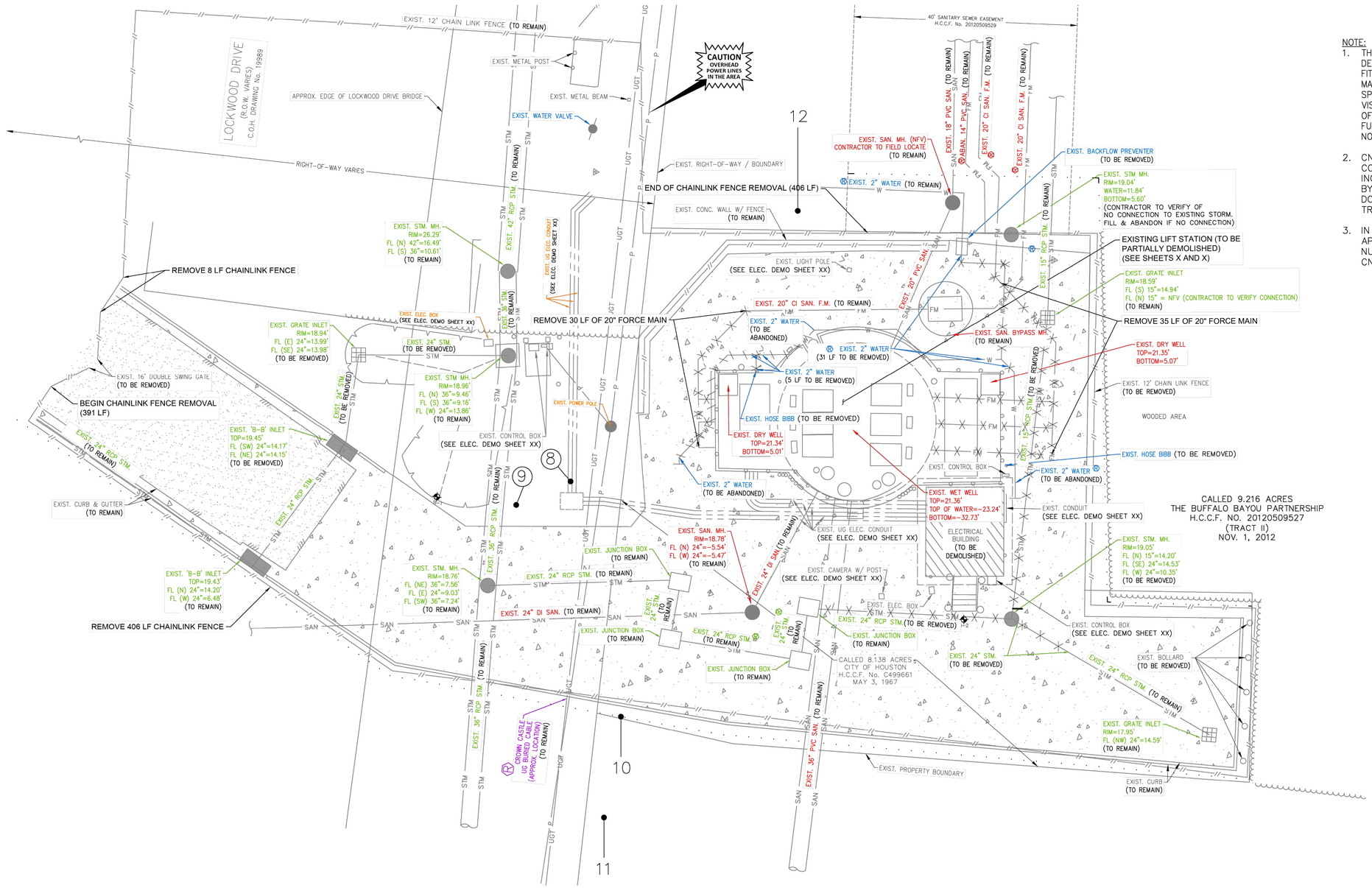

10' 0' 10'
SCALE
1"=10'

N E S W

TREE PRESERVATION PLAN LEGEND

1 — TREE NUMBER/LOCATION
(1) — TREE TO BE REMOVED
—X— TREE PROTECTION FENCE

NOTE:

1. THIS TREE PROTECTION PLAN WAS DEVELOPED WITH INFORMATION PROVIDED BY DESIGN ENGINEER IN DRAWINGS DATED APRIL 2026. THE PLAN CONSIDERS ALL FITTINGS, VERTICAL OFFSETS AND AREAS OF NECESSARY EXCAVATION. CHANGES MADE TO DESIGN MAY COMPROMISE THE TREE PROTECTION PLAN. REFER SPECIFICATIONS 01562 AND 02915. CONDITION OF EACH TREE IS BASED ON VISUAL EVALUATION AT TIME OF DESIGN. CONDITION AND STRUCTURAL INTEGRITY OF EACH TREE IS NOT GUARANTEED BY DESIGNER AT ANY POINT IN THE FUTURE, AS ENVIRONMENTAL AND MAINTENANCE INFLUENCES ON EACH TREE CAN NOT BE DETERMINED BY DESIGNER.
2. CN KOEHL URBAN FORESTRY, INC. HAS NOT BEEN CONTRACTED TO COMPLETE ANY TREE RISK ASSESSMENTS ON THIS PROJECT—THIS TPP INCLUDES PROTECTION MEASURES FOR SPECIES OF TREES PROTECTED BY APPLICABLE ORDINANCE ONLY. CN KOEHL URBAN FORESTRY, INC. DOES NOT GUARANTEE CONDITION OR STRUCTURAL INTEGRITY OF ANY TREES LOCATED ON OR ADJACENT TO THIS PROJECT.
3. IN AREA WHERE INDIVIDUAL TREES HAVE NOT BEEN TIED IN BY SURVEY APPROXIMATE LOCATION IS INDICATED ON TPP WITH A DOT AND TREE NUMBER. ACCURACY OF REPRESENTED LOCATION IS NOT GUARANTEED BY CN KOEHL URBAN FORESTRY, INC.

NO.	DATE	REVISION	APP.

C.N. Koehl Urban Forestry, Inc.
210 Stone Bush Ct. • Katy, Texas 77493
281-391-0022 ckoehl@koehlurbanforestry.com

APPROVED:

IDS Engineering Group
13430 NW. Freeway
Suite 700
Houston, Tx. 77040
713.462.3178
TxEng Firm 2726
TxSurv Firm 10110700

CITY OF HOUSTON
HOUSTON PUBLIC WORKS

LIFT STATION RENEWAL AND REPLACEMENT FY 2023
TREE PROTECTION PLAN
SHEET 2 OF 6

WBS NUMBER	FOR CITY OF HOUSTON USE ONLY
X-000X00-0000-X	
DRAWING SCALE	
HORIZ: 1"=40' VERT:	
CITY OF HOUSTON PM	
NAWARAJ PANTA, P.E.	
SHEET NO. 357 OF 361	

DWG. NO. TPP-02

IDS JOB No. 0057-085-00

FILE PATH: C:\Users\Ned\Desktop\UPCOMING PROJECTS\DS WBS No. R-000267-0179-4 LIFT STATION\02-LOCKWOOD SITE-TP.dwg

Tree No.	Location	Description	Chapter 33 Status	Comments	Treatment
Trees on South Point Lift station Site					
13	10385 Gulf Palms	10" Chinkapin Oak	Protected	Girdled by planting guy wire	Fence, Clearance prune
14	10385 Gulf Palms	5" Mulberry	Not protected	Private tree, Not impacted	
15	10385 Gulf Palms	11" Sugarberry	Not protected	Private tree	Clearance prune
16	10385 Gulf Palms	10" Sugarberry	Not protected	Private tree	Clearance prune
17	10385 Gulf Palms	8" Chinkapin Oak	Protected	Remove for drive, Girdled by planting guy wire	Remove tree, Provide 8" in replacement or mitigation
18	10385 Gulf Palms	2" Ligustrum	Not protected	Private tree, Not impacted	
19	10385 Gulf Palms	5" Lacebark Elm	Not protected	Private tree	Clearance prune
20	10385 Gulf Palms	5" Mulberry	Not protected	Private tree	Clearance prune

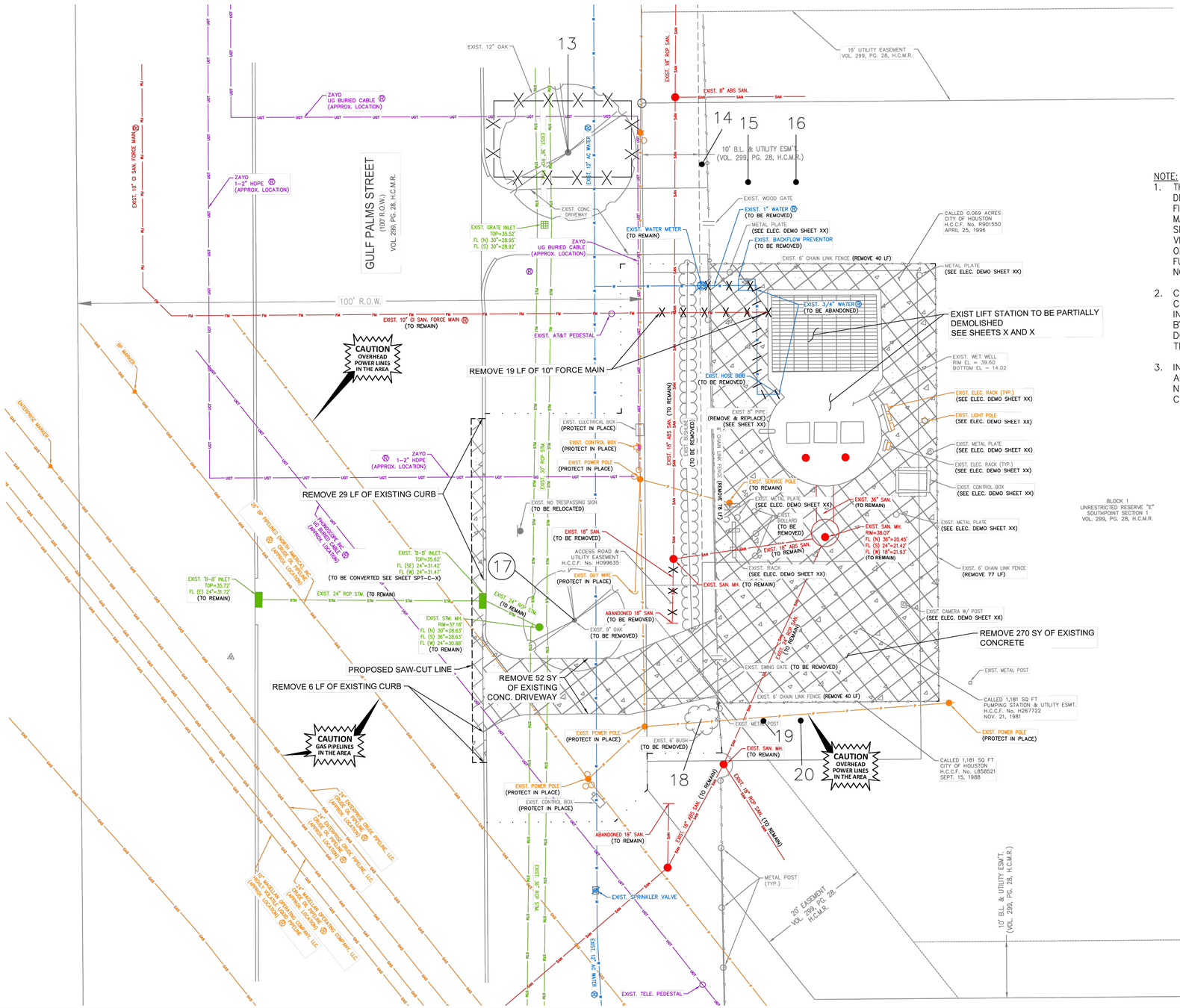

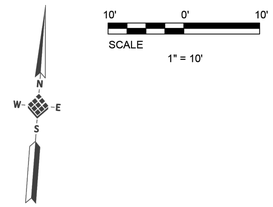

TREE PRESERVATION PLAN LEGEND

1	TREE NUMBER/LOCATION
(1)	TREE TO BE REMOVED
—X—	TREE PROTECTION FENCE

NOTE:

1. THIS TREE PROTECTION PLAN WAS DEVELOPED WITH INFORMATION PROVIDED BY DESIGN ENGINEER IN DRAWINGS DATED APRIL 2026. THE PLAN CONSIDERS ALL FITTINGS, VERTICAL OFFSETS AND AREAS OF NECESSARY EXCAVATION. CHANGES MADE TO DESIGN MAY COMPROMISE THE TREE PROTECTION PLAN. REFER SPECIFICATIONS 01562 AND 02915. CONDITION OF EACH TREE IS BASED ON VISUAL EVALUATION AT TIME OF DESIGN. CONDITION AND STRUCTURAL INTEGRITY OF EACH TREE IS NOT GUARANTEED BY DESIGNER AT ANY POINT IN THE FUTURE, AS ENVIRONMENTAL AND MAINTENANCE INFLUENCES ON EACH TREE CAN NOT BE DETERMINED BY DESIGNER.
2. CN KOEHL URBAN FORESTRY, INC. HAS NOT BEEN CONTRACTED TO COMPLETE ANY TREE RISK ASSESSMENTS ON THIS PROJECT–THIS TPP INCLUDES PROTECTION MEASURES FOR SPECIES OF TREES PROTECTED BY APPLICABLE ORDINANCE ONLY. CN KOEHL URBAN FORESTRY, INC. DOES NOT GUARANTEE CONDITION OR STRUCTURAL INTEGRITY OF ANY TREES LOCATED ON OR ADJACENT TO THIS PROJECT.
3. IN AREA WHERE INDIVIDUAL TREES HAVE NOT BEEN TIED IN BY SURVEY APPROXIMATE LOCATION IS INDICATED ON TPP WITH A DOT AND TREE NUMBER. ACCURACY OF REPRESENTED LOCATION IS NOT GUARANTEED BY CN KOEHL URBAN FORESTRY, INC.

NO.	DATE	REVISION	APP.

C.N. Koehl
Urban Forestry, Inc.
210 Stone Bush Ct. • Katy, Texas 77493
281-391-0022 ckoehl@koehlurbanforestry.com

APPROVED:

IDS Engineering Group
13430 NW. Freeway
Suite 700
Houston, Tx. 77040
713.462.3178
TxEng Firm 2726
TxSurv Firm 10110700

CITY OF HOUSTON

HOUSTON PUBLIC WORKS

LIFT STATION RENEWAL AND REPLACEMENT FY 2023

TREE PROTECTION PLAN SHEET 3 OF 6

WBS NUMBER	FOR CITY OF HOUSTON USE ONLY
X-000X00-0000-X	
DRAWING SCALE	
HORIZ: 1"=40' VERT:	
CITY OF HOUSTON PM	
NAWARAJ PANTA, P.E.	
DWG. NO. TPP–03	SHEET NO. 358 OF 361

IDS JOB No. 0057-085-00

PLOTTED: 4/21/2026 6:37 PM
FILE PATH: C:\Users\Ned\Desktop\UPCOMING PROJECTS\IDS WBS No. R-000267-0179-4 LIFT STATION\03-SOUTH PNT SITE-TP.dwg

Tree No.	Location	Description	Chapter 33 Status	Comments	Treatment
Trees on Scott #3 Lift station Site					
21	10718 1/2 Scott	15" Tallow	Not protected	Private tree, Not impacted	
22	10718 1/2 Scott	1" Boxwood	Not protected	Remove for sidewalk	Remove, No replacement required
23	10718 1/2 Scott	1" Boxwood	Not protected	Remove for sidewalk	Remove, No replacement required
24	10718 1/2 Scott	1" Boxwood	Not protected	Remove for sidewalk	Remove, No replacement required
25	10718 1/2 Scott	1" Boxwood	Not protected	Remove for sidewalk	Remove, No replacement required
26	Not available	16" Live Oak	Not protected	Private tree, Not impacted	
27	Not available	17" Live Oak	Not protected	Private tree, Not impacted	
28	Not available	17" Live Oak	Not protected	Private tree, Not impacted	
29	Not available	12" Live Oak	Not protected	Private tree, Not impacted	

TREE PRESERVATION PLAN LEGEND

1 — TREE NUMBER/LOCATION

(1) — TREE TO BE REMOVED

—X— TREE PROTECTION FENCE

10' 0' 10'

SCALE

1" = 10'

N W E S

NO.	DATE	REVISION	APP.

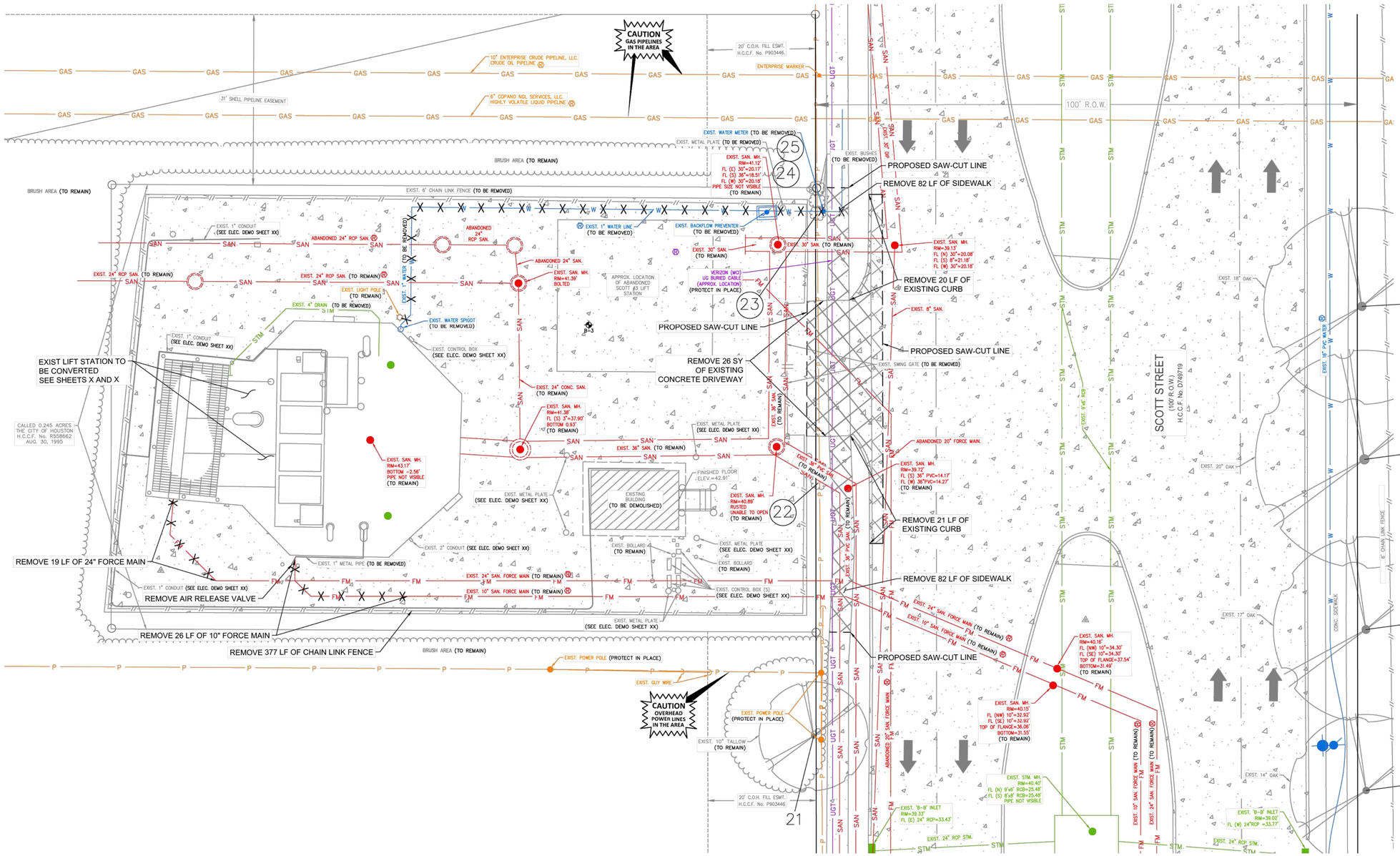

NOTE:

1. THIS TREE PROTECTION PLAN WAS DEVELOPED WITH INFORMATION PROVIDED BY DESIGN ENGINEER IN DRAWINGS DATED APRIL 2026. THE PLAN CONSIDERS ALL FITTINGS, VERTICAL OFFSETS AND AREAS OF NECESSARY EXCAVATION. CHANGES MADE TO DESIGN MAY COMPROMISE THE TREE PROTECTION PLAN. REFER SPECIFICATIONS 01562 AND 02915. CONDITION OF EACH TREE IS BASED ON VISUAL EVALUATION AT TIME OF DESIGN. CONDITION AND STRUCTURAL INTEGRITY OF EACH TREE IS NOT GUARANTEED BY DESIGNER AT ANY POINT IN THE FUTURE, AS ENVIRONMENTAL AND MAINTENANCE INFLUENCES ON EACH TREE CAN NOT BE DETERMINED BY DESIGNER.
2. CN KOEHL URBAN FORESTRY, INC. HAS NOT BEEN CONTRACTED TO COMPLETE ANY TREE RISK ASSESSMENTS ON THIS PROJECT—THIS TPP INCLUDES PROTECTION MEASURES FOR SPECIES OF TREES PROTECTED BY APPLICABLE ORDINANCE ONLY. CN KOEHL URBAN FORESTRY, INC. DOES NOT GUARANTEE CONDITION OR STRUCTURAL INTEGRITY OF ANY TREES LOCATED ON OR ADJACENT TO THIS PROJECT.
3. IN AREA WHERE INDIVIDUAL TREES HAVE NOT BEEN TIED IN BY SURVEY APPROXIMATE LOCATION IS INDICATED ON TPP WITH A DOT AND TREE NUMBER. ACCURACY OF REPRESENTED LOCATION IS NOT GUARANTEED BY CN KOEHL URBAN FORESTRY, INC.

C.N. Koehl
Urban Forestry, Inc.
210 Stone Bush Ct. • Katy, Texas 77493
281-391-0022 ckoehl@koehlurbanforestry.com

APPROVED:

IDS Engineering Group
13430 NW. Freeway
Suite 700
Houston, Tx. 77040
713.462.3178
TxEng Firm 2726
TxSurv Firm 10110700

CITY OF HOUSTON

HOUSTON PUBLIC WORKS

LIFT STATION RENEWAL AND REPLACEMENT FY 2023

TREE PROTECTION PLAN SHEET 4 OF 6

WBS NUMBER	FOR CITY OF HOUSTON USE ONLY
X-000X00-0000-X	
DRAWING SCALE	
HORIZ: 1"=40' VERT:	
CITY OF HOUSTON PM	
NAWARAJ PANTA, P.E.	
SHEET NO. 359 OF 361	

TPP—04

IDS JOB No. 0057-085-00

PLOTTED: 4/21/2026 6:37 PM
FILE PATH: C:\Users\Ned\Desktop\UPCOMING PROJECTS\IDS WBS No. R-000267-0179-4 LIFT STATION\04-SCOTT No 3 SITE-TP.dwg

PLOTTED: 4/21/2026 6:37 PM

Tree No.	Location	Description	Chapter 33 Status	Comments	Treatment
Trees on Woodforest Lift station Site					
30	12507 Woodforest	19" Sweetgum	Protected	Remove for detention/drainage	Remove tree, Provide 19" in replacement or mitigation
31	12507 Woodforest	3" Sweet Viburnum	Not protected	Remove for detention/drainage	Remove, No replacement required
32	12507 Woodforest	3" Sweet Viburnum	Not protected	Remove for detention/drainage	Remove, No replacement required
33	12507 Woodforest	3" Sweet Viburnum	Not protected	Remove for detention/drainage	Remove, No replacement required
34	12507 Woodforest	3" Sweet Viburnum	Not protected	Remove for detention/drainage	Remove, No replacement required
35	12507 Woodforest	8" Sweet Viburnum	Not protected	Remove for detention/drainage	Remove, No replacement required
36	12507 Woodforest	13" Lacebark Elm	Protected	Remove for storm	Remove tree, Provide 13" in replacement or mitigation
37	12507 Woodforest	11" Lacebark Elm	Protected	Remove for waterline & drive	Remove tree, Provide 11" in replacement or mitigation
38	12507 Woodforest	13" Lacebark Elm	Protected	Remove for waterline	Remove tree, Provide 13" in replacement or mitigation
39	12507 Woodforest	15" Lacebark Elm	Protected		Fence
40	12507 Woodforest	16" Lacebark Elm	Protected		Fence
41	12507 Woodforest	13" Water Oak	Protected		Fence
42	12507 Woodforest	12" Lacebark Elm	Protected		Fence

TREE PRESERVATION PLAN LEGEND

- 1 — TREE NUMBER/LOCATION
- (1) — TREE TO BE REMOVED
- —X— TREE PROTECTION FENCE

10' 0' 10'
SCALE
1"=10'

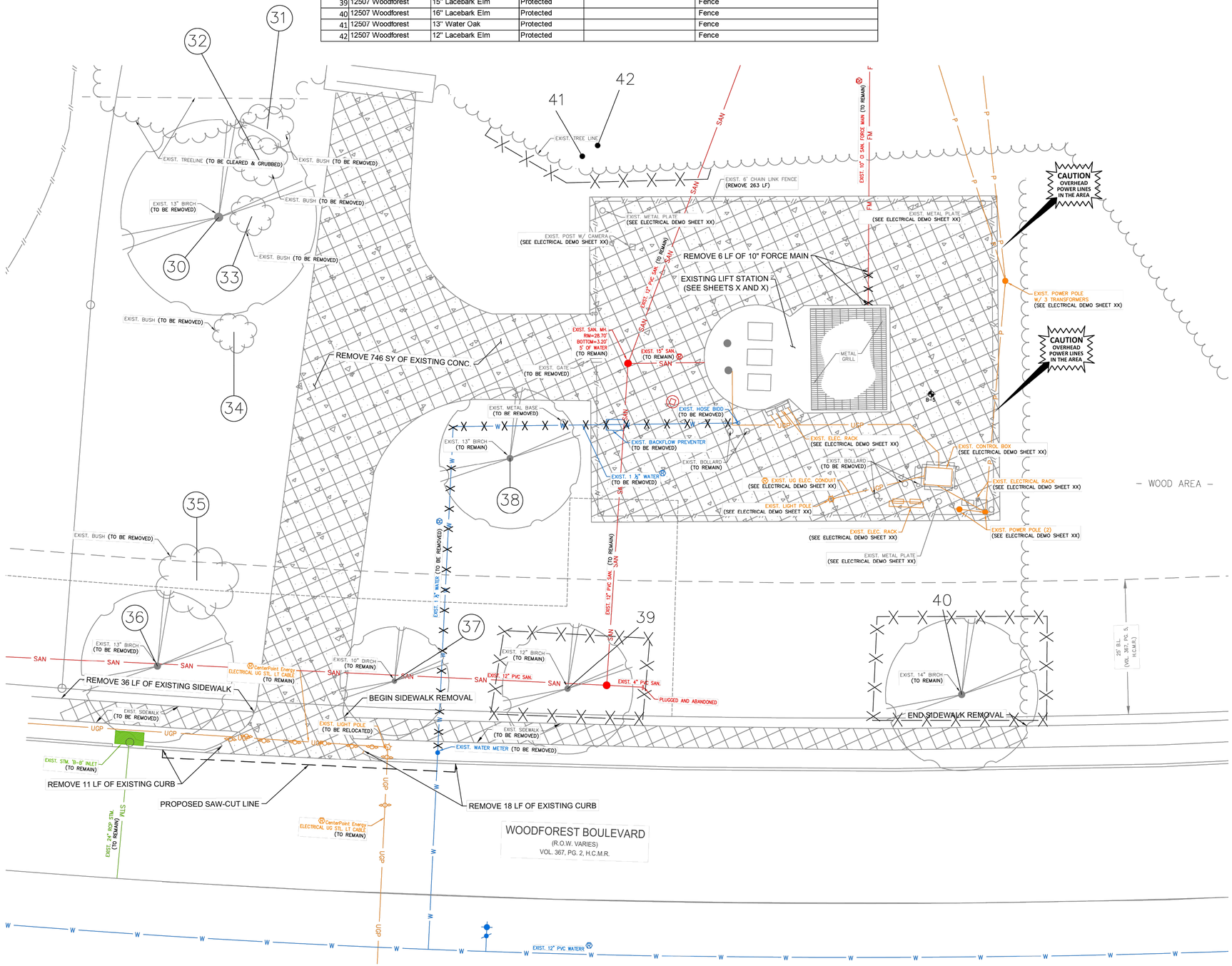

NOTE:

1. THIS TREE PROTECTION PLAN WAS DEVELOPED WITH INFORMATION PROVIDED BY DESIGN ENGINEER IN DRAWINGS DATED APRIL 2026. THE PLAN CONSIDERS ALL FITTINGS, VERTICAL OFFSETS AND AREAS OF NECESSARY EXCAVATION. CHANGES MADE TO DESIGN MAY COMPROMISE THE TREE PROTECTION PLAN. REFER SPECIFICATIONS 01562 AND 02915. CONDITION OF EACH TREE IS BASED ON VISUAL EVALUATION AT TIME OF DESIGN. CONDITION AND STRUCTURAL INTEGRITY OF EACH TREE IS NOT GUARANTEED BY DESIGNER AT ANY POINT IN THE FUTURE, AS ENVIRONMENTAL AND MAINTENANCE INFLUENCES ON EACH TREE CAN NOT BE DETERMINED BY DESIGNER.
2. CN KOEHL URBAN FORESTRY, INC. HAS NOT BEEN CONTRACTED TO COMPLETE ANY TREE RISK ASSESSMENTS ON THIS PROJECT–THIS TPP INCLUDES PROTECTION MEASURES FOR SPECIES OF TREES PROTECTED BY APPLICABLE ORDINANCE ONLY. CN KOEHL URBAN FORESTRY, INC. DOES NOT GUARANTEE CONDITION OR STRUCTURAL INTEGRITY OF ANY TREES LOCATED ON OR ADJACENT TO THIS PROJECT.
3. IN AREA WHERE INDIVIDUAL TREES HAVE NOT BEEN TIED IN BY SURVEY APPROXIMATE LOCATION IS INDICATED ON TPP WITH A DOT AND TREE NUMBER. ACCURACY OF REPRESENTED LOCATION IS NOT GUARANTEED BY CN KOEHL URBAN FORESTRY, INC.

NO.	DATE	REVISION	APP.

C.N. Koehl
Urban Forestry, Inc.
210 Stone Bush Ct. • Katy, Texas 77493
281-391-0022 ckoehl@koehlurbanforestry.com

APPROVED:

IDS Engineering Group
13430 NW. Freeway
Suite 700
Houston, Tx. 77040
713.462.3178
TxEng Firm 2726
TxSurv Firm 10110700

CITY OF HOUSTON
HOUSTON PUBLIC WORKS

LIFT STATION RENEWAL AND REPLACEMENT FY 2023
TREE PROTECTION PLAN SHEET 5 OF 6

WBS NUMBER	FOR CITY OF HOUSTON USE ONLY
X–000X00–0000–X	
DRAWING SCALE	
HORIZ: 1"=40' VERT:	
CITY OF HOUSTON PM	
NAWARAJ PANTA, P.E.	
DWG. NO. TPP–05	SHEET NO. 360 OF 361

IDS JOB No. 0057-085-00

FILE PATH: C:\Users\Ned\Desktop\UPCOMING PROJECTS\DS WBS No. R–000267–0179–4 LIFT STATION\05–WOODFOREST SITE–TP.dwg

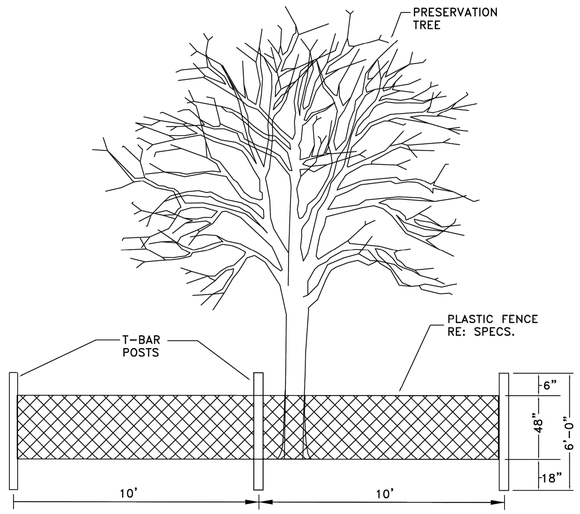

TREE PROTECTION FENCING DETAIL A

NOT TO SCALE

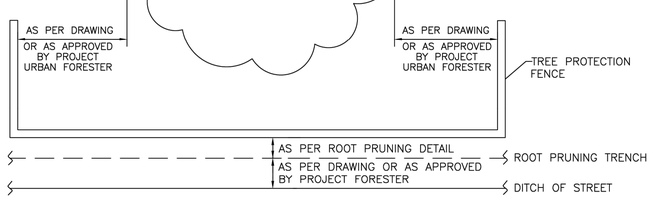

TREE PROTECTION FENCING DETAIL B

NOT TO SCALE

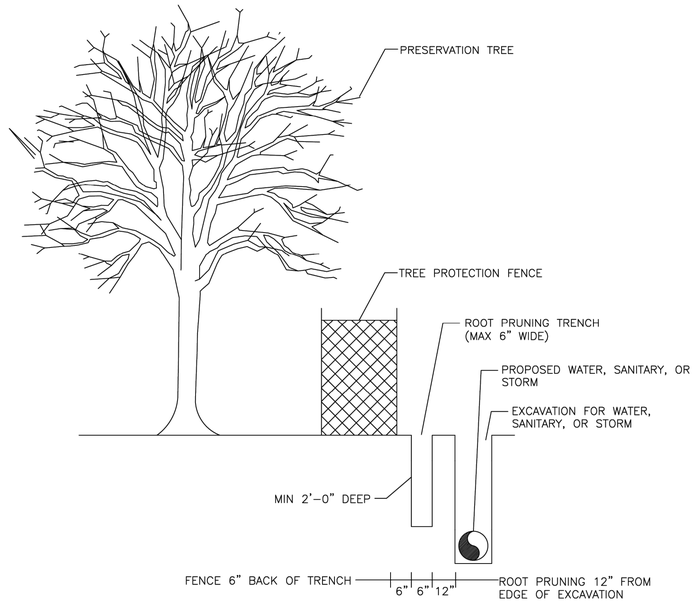

ROOT PRUNE FOR WATER, SANITARY, OR STORM LINE

NOT TO SCALE

Tree Removal List

Tree No.	Location	Description	Replacement requirement
3	Not available	15" Mulberry	0
4	Not available	10" Mulberry	0
5	Not available	5" Lacebark Elm	5
6	Not available	8" Lacebark Elm	8
7	Not available	6" Lacebark Elm	6
8	Not available	4" Sugarberry	0
9	Not available	8" Sugarberry	0
17	10385 Gulf Palms	8" Chinkapin Oak	8
30	12507 Woodforest	19" Sweetgum	19
31	12507 Woodforest	3" Sweet Viburnum	0
32	12507 Woodforest	3" Sweet Viburnum	0
33	12507 Woodforest	3" Sweet Viburnum	0
34	12507 Woodforest	3" Sweet Viburnum	0
35	12507 Woodforest	8" Sweet Viburnum	0
36	12507 Woodforest	13" Lacebark Elm	13
37	12507 Woodforest	11" Lacebark Elm	11
38	12507 Woodforest	13" Lacebark Elm	13
		TOTAL REPLACEMENT INCHES REQUIRED	**83**

Tree Replacement List

Quantity	Caliper Size	Species	Container/Tree Spade size
		TOTAL REPLACEMENT INCHES INCLUDED IN PLAN	**0**

NOTE: Tree replacement locations are not shown on plans. Contractor must coordinate with City of Houston Urban Forestry and Houston Public Works prior to PURCHASING trees. This project may not have adequate room for all required replacement trees without creating regulatory sign or traffic/pedestrian visibility issues. Number of trees and planting locations will be determined by City of Houston Urban Forestry in construction phase. Trees that are planted are to be maintained and watered for 2 years following planting per standard spec 02915. Timing of planting may be delayed in periods of drought with mandatory water restrictions in place-timing to be coordinated with City of Houston Urban Forestry. Trees in esplanade groupings to be planted in common bed with 4" of hardwood mulch between trees.

Trees are to be maintained and watered for 2 years following planting per standard spec 02915. Timing of planting may be delayed in periods of drought with mandatory water restrictions in place-timing to be coordinated with City of Houston Forestry.

Tree replacement locations shall comply with Houston Public Works spec sections 02811, 02911, 02912, 02915, 02921 & 02922. In general trees along sides of street right of ways shall be no closer than 3' to back of curb or 20' from another tree. Trees in medians shall be no closer than 6' back of curb, 75' from an intersection, 50' to a median cut, or 20' from another tree. Contractor to coordinate locations with City Forestry and HPW prior to PURCHASING trees. All replacement trees called out on plans may not be planted on project relative to coordination with listed parties.

Cash Allowance Due Parks from HPW for Balance of Mitigation Not Planted on Project

	Required Mitigation total	Mitigation rate/inch	
0-5.99"	5	$ 302.12	$ 1,510.60
6-11.99"	33	$ 503.55	$ 16,617.15
12" +	45	$ 671.40	$ 30,213.00
		TOTAL REQUIRED MITIGATION FEE	**$ 48,340.75**

NO.	DATE	REVISION	APP.

C.N. Koehl
Urban Forestry, Inc.
210 Stone Bush Ct. ◦ Katy, Texas 77493
281-391-0022 ckoehl@koehlurbanforestry.com

APPROVED:

IDS Engineering Group
13430 NW. Freeway
Suite 700
Houston, Tx. 77040
713.462.3178
TxEng Firm 2726
TxSurv Firm 10110700

CITY OF HOUSTON

HOUSTON PUBLIC WORKS

LIFT STATION RENEWAL AND REPLACEMENT FY 2023

TREE PROTECTION PLAN

SHEET 6 OF 6

WBS NUMBER	FOR CITY OF HOUSTON USE ONLY
X-000X00-0000-X	
DRAWING SCALE	
HORIZ: N.T.S. VERT:	
CITY OF HOUSTON PM	
NAWARAJ PANTA, P.E.	
SHEET NO. 361 OF 361	

DWG. NO. TPP-06

IDS JOB No. 0057-085-00

PLOTTED: 4/21/2026 6:37 PM

FILE PATH: C:\Users\Ned\Desktop\UPCOMING PROJECTS\IDS WBS No. R-000267-0179-4 LIFT STATION\06-DETAILS.dwg